USAID | AFGHANISTAN

FROM THE AMERICAN PEOPLE

ENGINEERING SUPPORT PROGRAM

WO-LT-0059 AMENDMENT 1 TASK 1, 2, 3 and 4
NEPS DISTRIBUTION MATERIALS AND INSTALLATION SPECIFICATION DEVELOPMENT

September 10, 2013

This publication was produced for review by the United States Agency for International Development. It was prepared by Tetra Tech, Inc.

Contents

Abbreviations, Acronyms & Glossary	ii
Amendment 1, Task 1, General Arrangement Drawing	AMD 1 TASK 1 – 1
Amendment 1, Task 2, MV Transformer Fusing Report	AMD 1 TASK 2 - 1
Amendment 1, Task 3, MV Protection Equipment Specifications Report	AMD 1 TASK 3 - 1
Amendment 1, Task 4, MV Protection Equipment Bill Of Quantities Report	AMD 1 TASK 4 - 1

Abbreviations, Acronyms & Glossary

A	Amperes, a unit of electrical current. Larger currents require larger physical conductors to move without overheating.
Circuit Breaker	ANSI device number 52. An electrical system element used to interrupt the circuit both under load and no-load conditions. Circuit breakers are also designed to interrupt a rated level of fault current that may be present under short circuit fault conditions.
Commercial Losses	See also Technical Losses. The energy delivered by the electrical utility to customers that are not paid for by customers. These losses are predominantly theft but also can include losses from faulty or inoperative revenue meters.
Coordination Study	An electrical study to determine settings for protective relays and settings/sizes for other protective devices such as automatic switches or fuses. The purpose of having proper settings and sizes is to prevent large area “black outs” due to small local faults or disturbances.
DABS	DABS operates and manages electric power generation, importation, transmission, and distribution throughout Afghanistan on a commercial basis. DABS shares are owned by: Ministry of Finance 45%, MEW 35%, MoEc 10%, MoPD 10%.
Distribution (Distribution System)	Typically 33kV and below. These systems are used to bring power to service transformers that provide power to consumers, businesses and local users.
Electrical Demand	The instantaneous electricity volume required by users in an electrical distribution system. Usually expressed as real power demand in kW or MW and total apparent power demand in kVA and MVA.
Fault	An event on an electrical system that connects current carrying conductors (phase conductors) to either ground (line to ground or phase to ground) or each other (phase to phase). These events are normally disruptive and require ‘clearing’ (de-energizing the faulted circuit) to retain system stability and for protection of property and personnel.
Feeder	An electrical circuit that originates from a circuit breaker, switch or fused-switch combination. The Feeder Circuit is typically defined by the upstream protective device (circuit breaker/fuse switch) and the wire that terminates to the load.
IEEE (Institute of Electrical and Electronics Engineers)	A US-based organization of electrical engineers. IEEE publishes the color book series and other technical manuals including the “Encyclopedia of Electrical Engineering” as well as extensive standards for electrical equipment and guides for application of electrical equipment.
kV	kilo-Volts, 1,000V, a unit of electrical potential (voltage).

kVA	kilo-Volt-Ampere (1,000VA), a unit of total apparent electrical power (energy/time) including both real and imaginary (reactive) power. Also known as total apparent electrical demand. The square root of the sum of the squares of the real and imaginary (reactive) power is the total power. The kVA is the hypotenuse of a right triangle consisting of real and imaginary (reactive) power as its legs. The cosine of the angle between real and apparent/total power is called the power factor. See MVA.
kW	Kilowatts, 1,000W, a unit of electrical real power (energy/time). Also known as electrical demand.
Line	In the context of this report, generally referring to 15kV or 20kV distribution line.
Load	A device connected to an electrical system that consumes electrical energy. Examples of loads at the consumer level are light bulbs, computers and air conditioning units.
MEW	GIRoA Ministry of Energy and Water.
Medium Voltage	Equipment or systems designed to operate greater than 1000V and less than 100,000 V (IEEE Std. 100-2000)6 Distribution systems are operated at medium voltage (typically 2.4 kV through 34.5 kV) to efficiently move moderately large blocks (typically several MW) of power between high voltage substations and loads that may be up to tens of kilometers distant from the high voltage substation. Larger loads and longer distances make High Voltage lines more attractive, while Low Voltage systems are more attractive for smaller loads and shorter distances (such as occur within a neighborhood or large building).
MVA	mega-Volt-Amperes, 1,000,000VA, 1,000kVA, a unit of total apparent electrical power (energy/time) including both real and imaginary (reactive) power. Also known as total apparent electrical demand. (See kVA.)
MW	mega-Watts, 1,000,000W, 1,000kW, a unit of electrical real power (energy/time). Also known as electrical demand.
NTP	Notice to proceed
One-Line Diagram	An electrical diagram typically representing a three phase system showing only one phase of the system for simplicity.
Phase (Ph) (P)	Also known as phi (φ). Commonly referring to one of the typically three conductors of an AC power system that is intended to operate at the nominal voltage above the ground potential. A typical AC utilization system in Afghanistan will therefore have 4 wires; three phase conductors, called A, B and C operating at 400V and a neutral conductor nominally operating at 0V. Transmission circuits typically consist of three phases but do not have a neutral or fourth wire. Transmission circuits often have a shield wire whose only purpose is to protect the transmission circuit from lighting.
TCC	Time Current Characteristic curve

AFGHANISTAN ENGINEERING SUPPORT PROGRAM

WO-LT-0059A1T1
NEPS DISTRIBUTION MATERIALS AND INSTALLATION SPECIFICATION DEVELOPMENT

Amendment 1, Task 1, General Arrangement Drawing

September 10, 2013

DISCLAIMER

The author's views expressed in this publication do not necessarily reflect the views of the United States Agency for International Development or the United States Government.

Contents

1.0 Task 1 Scope 1

1.1 Task Description 1

Appendices

Appendix A – Single Line Diagram with General Arrangement Drawing-E-501..……..…3

Appendix B – Typical MV Protective Equipment Cut Sheets……...4

1.0 Task 1 Scope

1.1 Task Description

As Tetra Tech (Tt) is proceeding with the WO-LT-0059 Relay Coordination Study, deficiencies in the medium voltage (MV) system have been identified resulting from a lack of materials including MV distribution fuses and fuse links. Amendment No. 1, Task 1 for WO-LT-0059 was given NTP on July 27, 2013 by USAID to address these deficiencies by providing technical services to specify materials and support procurement, training for installation of the materials, and guidance relating to proper installation and maintenance of the specified materials.

Appendix A provides a general arrangement/single line drawing indicating the location of the protective equipment to be installed. It illustrates the general arrangement of fuses, cutouts, and supports to be installed on existing Kabul area MV distribution poles.

Appendix B is a group of typical cut sheets describing MV protection materials for the feeder classes currently included in the LT-59 Relay and Coordination Study. This report is Task 1 of Amendment No. 1 to Work Order WO-LT-0059.

Appendices

Appendix A – Single Line/General Arrangement Drawing

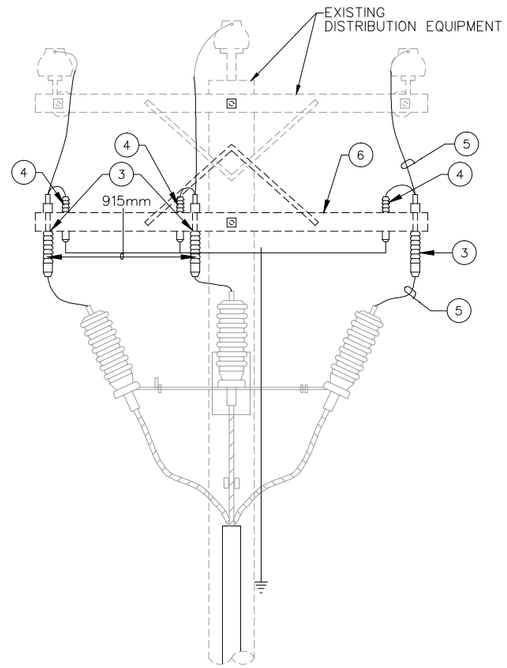

FRONT VIEW

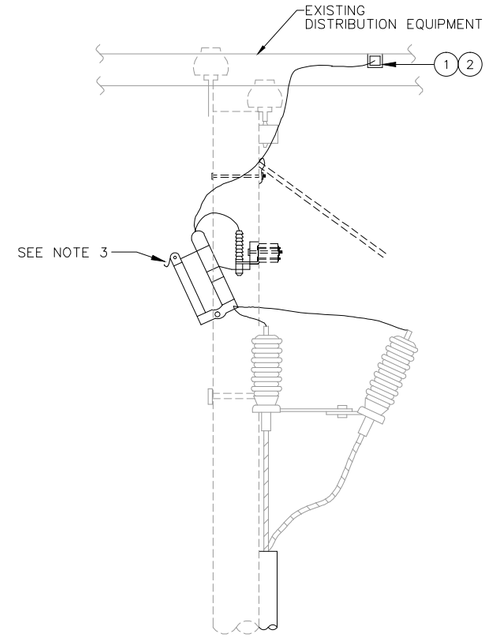

SIDE VIEW

LEGEND

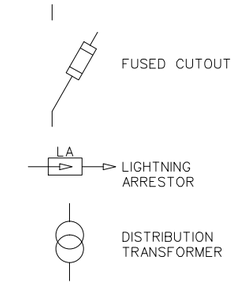

POLE LINE MATERIAL LIST

1. STIRRUP
2. HOT LINE CLAMP
3. FUSED CUTOUT, AS SPECIFIED
4. SURGE ARRESTER, AS SPECIFIED
5. #4 AWG SOFT DRAWN COPPER OR LARGER
6. DABS STANDARD CROSSARM

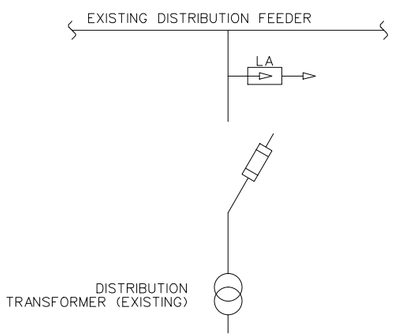

TRANSFORMER SIZE (kVA)	15 kV		20 kV	
	FLA[3] (A)	K LINK RATING (A)	FLA[3] (A)	K LINK RATING (A)
25	0.96	2	0.72	1
50	1.92	3	1.44	2
75	2.89	6	2.17	3
100	3.85	6	2.89	6
160	6.16	8	4.62	6
200	7.70	10	5.77	8
250	9.62	15	7.22	10
315	12.12	20	9.09	15
400	15.40	20	11.55	15
500	19.25	25	14.43	20
630	24.25	40	18.19	25
800	30.79	40	23.09	30
1000	38.49	50	28.87	40
1250	48.11	65	36.08	50
1600	61.58	80	46.19	65

NOTES:

1. CONNECT BOTTOM LEAD OF ARRESTOR AND CABLE SHIELD DRAIN WIRES TO POLE GROUND. IF METAL CONDUIT OR CABLE SHIELDS ARE USED CONNECT THEM TO POLE GROUND.
2. FUSE LINKS ARE INSTALLED INSIDE THE CUTOUT FUSE TUBE. SELECT FUSE LINK FROM TABLE.
3. FULL LOAD AMPERES, WHICH IS CURRENT AT TRANSFORMER NAMEPLATE RATING. FLA IS EQUAL TO THE THREE PHASE TRANSFORMER RATED kVA DIVIDED BY THE SQUARE ROOT OF 3 TIMES THE PHASE-TO-PHASE VOLTAGE IN kV.
4. ARRESTOR MCOV SHALL BE SPECIFIED AS FOLLOW:
   15 kV SYSTEM - 15.3 kV
   20 kV SYSTEM - 22.0 kV
5. CUTOUT BIL FOR 15 kV/20 kV SYSTEM SHALL BE:
   150 kV
6. CABLE TERMINATORS AND SUPPORT BRACKETS BY OTHERS.
7. SEE MEDIUM VOLTAGE PROTECTION SPECIFICATION FOR DETAILED ARRESTOR, CUTOUT, AND MOUNTING SPECIFICATIONS. DRAWING SHOWS DETAILS FOR FUSED CUTOUTS AND SURGE ARRESTORS. REMAINDER OF MATERIALS AND CONSTRUCTION PRACTICES ARE TO MATCH DABS STANDARD PRACTICES.

This project was made possible by the United States Agency for International Development and the generous support of the American People through USAID Global Architecture and Engineering IQC Contracts.

SYMB	DESCRIPTION	DATE	APR

DESIGNED BY: RM
DATE: 8/27/2013
DWN BY: KP
SUBMITTED BY: TETRA TECH
CHK BY: LH
FILE NO.: E-501

USAID FROM THE AMERICAN PEOPLE

AESP

WO-LT-0059A1

SINGLE LINE DIAGRAM AND GENERAL ARRANGEMENT

SHEET REFERENCE NUMBER: E-501

DRAFT 9/10/2013 8:14 AM

NOT FOR CONSTRUCTION

UNLESS OTHERWISE NOTED, LINEAR DIMENSIONS SHOWN ARE IN MILLIMETERS.

P:\Afghanistan\SEPS\E-501.dwg 9/10/2013 8:14:15 AM Kip Prentice 6436

Appendix B – Typical MV Protective Equipment Cut Sheets

Fuse Links

Warranty - Material

Hubbell Power Systems, Inc. warrants all products sold by it to be merchantable (as such term is defined in the Uniform Commercial Code) and to be free from defects in material and workmanship. Buyer must notify the Company promptly of any claim under this warranty. The Buyer's exclusive remedy for breach of this warranty shall be the repair or replacement, F.O.B. factory, at the Company's option, of any product defective under the warranty which is returned to the Company within one year from the date of shipment. NO OTHER WARRANTY, WHETHER EXPRESS OR ARISING BY OPERATION OF LAW, COURSE OF DEALING, USAGE OF TRADE OR OTHERWISE IMPLIED, SHALL EXIST IN CONNECTION WITH THE COMPANY'S PRODUCTS OR ANY SALE OR USE THEREOF. The Company shall in no event be liable for any loss of profits or any consequential or special damages incurred by Buyer. The Company's warranty shall run only to the first Buyer of a product from the Company, from the Company's distributor, or from an original equipment manufacturer reselling the Company's product, and is non-assignable and non-transferable and shall be of no force and effect if asserted by any person other than such first Buyer. This warranty applies only to the use of the product as intended by Seller and does not cover any misapplication or misuse of said product.

Warranty - Application

Hubbell Power Systems, Inc. does not warrant the accuracy of and results from product or system performance recommendations resulting from any engineering analysis or study. This applies regardless of whether a charge is made for the recommendation, or if it is provided free of charge.

Responsibility for selection of the proper product or application rests solely with the purchaser. In the event of errors or inaccuracies determined to be caused by Hubbell Power Systems, Inc., its liability will be limited to the re-performance of any such analysis or study.

⚠ WARNING

These fuse links will not protect personnel from electrocution. Hot gases and high velocity particles are expelled during interruption. This expulsion can cause serious injury. Do not get in line with fuseholder. Stay away from conical space below fuseholder.

CAUTION: The equipment covered in this catalog section should be installed, used, and serviced only by competent personnel familiar with and following good work and safety practices. This equipment is for use by such personnel and is not intended as a substitute for adequate training and experience in safe procedures for this type of equipment.

This catalog information and any related instruction sheets do not cover all details or situations in equipment use nor do they provide for every possible contingency to be encountered in relation to installation, operation or maintenance. Should additional information and details be desired, or if specific situations arise which are not covered adequately for the user's purpose, the specifics should be referred to Hubbell Power Systems, Inc.

NOTE: Because Hubbell has a policy of continuous product improvement, we reserve the right to change design and specifications without notice.

©Copyright 2008 Hubbell • 210 North Allen Street • Centralia, MO 65240-1395 USA

Fuse Links

- TYPE K
- TYPE T
- TYPE MS
- SLOFAST

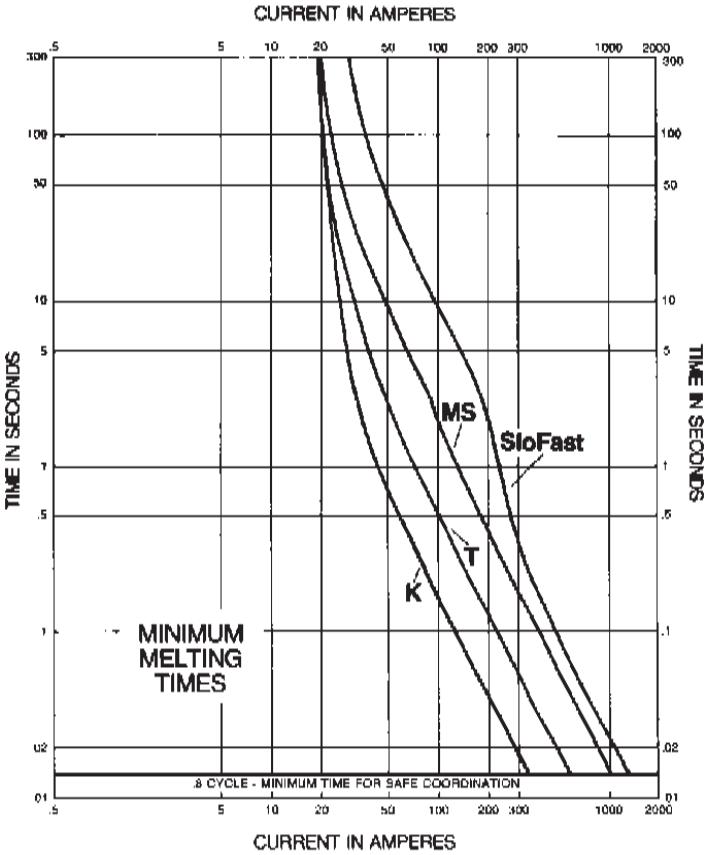

RELATIVE SPEEDS OF CHANCE FUSE LINKS

Format: 10 Ampere Links (10.4 amp. SloFast)

• Meet all applicable ANSI/NEMA standards

Chance Type K and Type T fuse links are made in complete accordance with ANSI/NEMA standards. Other Chance links meet all the standards except those covering time-current characteristics. Time-current characteristics for links other than K and T links are not covered in the ANSI standards.

• Precision — The standard of Chance fuse links

Chance fuse links assure system protection because they are precision manufactured. The fusible materials used in Chance Fuse Links are under continual control during manufacture. Pre-tested to guarantee their electrical values, these materials are held to precise tolerances. At critical points during the manufacturing process, rigid inspections are made.

Packaging

Chance fuse links come in protective plastic bags with perforations to facilitate quick, easy opening even when lineman's gloves are worn. Each bag remains completely sealed for all-weather protection and keeps the links protected in the line truck's bins.

Type and amperage is printed on each bag, for easy identification.

Type K fuse links

Application

The fast characteristics of Type K fuse links were established by ANSI/NEMA to provide fuse links that would meet existing coordination schemes.

Chance Type fuse links are designed to carry 150% of their rated current without damage to the fuse link itself or the cutout in which it is installed. This capacity is for special loading situations, such as short-time overloads and cold load pick-up.

Materials used

The fusible section of the 1 through 3 ampere Type K links consist of a stainless-steel fuse strain wire; the 6 through 10 ampere, stainless-steel strain wire and a copper-alloy fuse wire; 12 through 100 amperes, a stainless steel strain wire and a silver-copper fuse wire; 140 and 200 ampere, a silver-copper fuse wire large enough to serve as both strain and fuse wire.

Amps	Catalog Number *Solid head	Catalog Number †Removable head
1	M1K23	M1KA23
2	M2K23	M2KA23
3	M3K23	M3KA23
6	M6K23	M6KA23
8	M8K23	M8KA23
10	M10K23	M10KA23
12	M12K23	M12KA23
15	M15K23	M15KA23
20	M20K23	M20KA23
25	M25K23	M25KA23
30	M30K23	M30KA23
40	M40K23	M40KA23
50	M50K23	M50KA23
65	M65K23	M65KA23
80	M80K23	M80KA23
100	M100K23	M100KA23
140	M140K23	M140KA23
200	M200K23	M200KA23

Buttonheads and lengths

Conforming to all applicable ANSI/NEMA specifications, Chance Type K links are available with a removable or solid buttonhead.

Note: Catalog Numbers shown are 23" overall length; also available in 26" length.
For 26": *Solid head K or T links, change the last two digits from 23 to 26.
†Removable head K or T links, drop the last two digits.

Twin Pigtail Type K and T fuse links

The twin pigtail fuse link is convenient to work with and easier to install in the cutout than conventional single pigtail fuse links. The pigtails attach under the clamp with one on each side of the attachment stud.
*†Catalog Numbers shown are 23" in overall length; for 26", see Note above.

Twin Pigtail fuse links

Type	Amps	*Solid head	†Removable head
K	200	M200K23T	M200KA23T
T	200	M200T23T	M200TA23T
K	140	M140K23T	M140KA23T
T	140	M140T23T	M140TA23T

Type T fuse links

Application

Chance Type T fuse links provide slower time-current characteristics than the Type K links. Type T links coordinate particularly well with automatic oil-circuit reclosers.

Chance Type T links are designed to carry 150% of their rated current without damage to the fuse link itself or the cutout in which it is installed. This capacity is for special loading situations, such as, short-time overloads, and cold-load pick-up.

Fuse elements

1 through 3 ampere Type T fuse links employ a fusing section consisting of a stainless-steel wire serving as both strain and fuse wire; 6 through 100 ampere, a stainless-steel strain wire and a pure-tin fuse wire in parallel. 140 and 200 ampere T links have a copper element mechanically crimped at one end, soldered at the other end. On overloads or low faults, the solder becomes a fluid and the link separates; on higher fault currents, the link separates when the copper wire melts.

Buttonheads and lengths

Chance Type T fuse links meet all applicable ANSI/NEMA specifications. They are available with a removable or solid buttonhead.

*†Catalog Numbers shown are 23" in overall length; for 26", see Note above.

Amps	Catalog Number *Solid head	Catalog Number †Removable head
1	M1T23	M1TA23
2	M2T23	M2TA23
3	M3T23	M3TA23
6	M6T23	M6TA23
8	M8T23	M8TA23
10	M10T23	M10TA23
12	M12T23	M12TA23
15	M15T23	M15TA23
20	M20T23	M20TA23
25	M25T23	M25TA23
30	M30T23	M30TA23
40	M40T23	M40TA23
50	M50T23	M50TA23
65	M65T23	M65TA23
80	M80T23	M80TA23
100	M100T23	M100TA23
140	M140T23	M140TA23
200	M200T23	M200TA23

Type MS fuse links (Equivalent to Kearney Type KS)

Application data

Chance Type MS fuse links have very slow time-current characteristics. In applications where ANSI/NEMA Type T fuse link characteristics are too-fast, the slower characteristics of Type MS can often be utilized.

Fuse-section operation

The fuse element of Chance Type MS fuse links is composed of two copper or copper-alloy wires joined by a solder junction. During heavy overloads or low fault currents, the heat generated by the two wires melts the solder, causing fuse operation. Operation under medium or heavy fault current occurs as one of the two wires melt.

Buttonhead and lengths

The Type MS link is available with only a removable buttonhead.

‡**Note:** Catalog Numbers shown are 23" overall length; also available in 26" length.
†For 26", drop the last two digits.

Amps	‡Catalog Number Removable head
3	M3MSA23
5	M5MSA23
7	M7MSA23
10	M10MSA23
15	M15MSA23
20	M20MSA23
25	M25MSA23
30	M30MSA23
40	M40MSA23
50	M50MSA23
65	M65MSA23
80	M80MSA23
100	M100MSA23
125	M125MSA23
150	M150MSA23
200	M200MSA23

HUBBELL CHANCE POWER SYSTEMS, INC.

SloFast fuse links

Transformer protection

Secondary temporary faults that can be withstood by a transformer will not rupture a SloFast fuse link. If secondary faults persist and become dangerous, the SloFast link will operate, preventing damage to the transformer.

System protection

When a heavy fault occurs within the transformer primary bushings, a SloFast link clears the transformer from the system before damage can occur, and before any other protective device can operate and cause an unnecessary interruption to any other segment of the system.

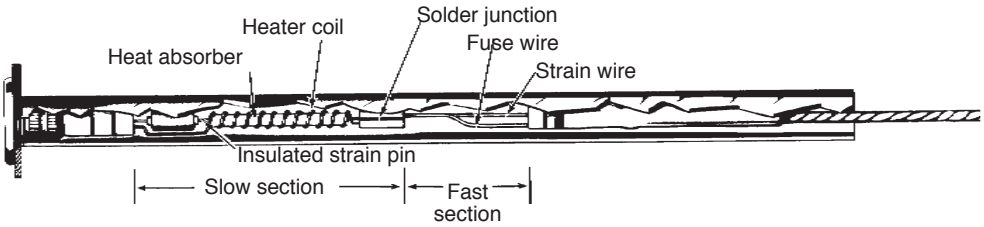

Construction and theory of operation

The inner construction of the SloFast Fuse Link is illustrated in the cut-away view above. There are two distinct current-responsive elements: one slow, one fast.

The slow curent-responsive element is made up of a number of components. The heater coil and the soldered junction are the two primary components. The insulated strain pin serves to carry the tension exerted when the fuse link is installed in a fuse cutout, and as a heat conductor to the soldered junction. The ceramic tube serves as a heat absorber.

The slow current-responsive element functions in the following manner: The heater coil generates heat at a rate which is proportional to the square of the current. This heat is absorbed by the ceramic material and transmitted to the soldered junction via the metallic strain pin. When a certain value of current flows for a specific length of time, sufficient heat is generated and transmitted to the soldered junction to cause melting of the solder, and the separation of the fuse link, and the interruption of the circuit. The time-current curve of the slow current-responsive element is that portion above the "knee" (4 seconds to 5 minutes on the time axis) in the graph below.

The fast current-responsive element is constructed like the single element in a conventional fuse link. Operation of the fuse link in time periods of less than 4 seconds is conventional. The time-current curve of the fast current-responsive element is that portion below the "knee" in the time-current graph below.

Application data

A comparison of the time-current curves of the Chance SloFast fuse link with those of conventional fuse links and the safe-loading time current characteristics for distribution transformers illustrates the application potential of the SloFast fuse links.

The rather unusual current rating assigned to SloFast fuse links is an aid in their application since the current rating assigned is identical to the continuous current rating of the transformers which they were specifically designed to protect.

If the SloFast link is used in place of ordinary links, the full overload capacity of the transformer is made available, but at the same time the transformer is protected from faults and overloads which could either destroy or shorten its life expectancy. SloFast is the perfect match for transformer protection. **Note:** For application of SloFast links for transformers, see Bulletin 10-8010.

Amps	†Catalog Number	
	Solid head	Removable head
0.4	M0D4SF23	M0D4SFA23
0.6	M0D6SF23	M0D6SFA23
0.7	M0D7SF23	M0D7SFA23
1.0	M1D0SF23	M1D0SFA23
1.3	M1D3SF23	M1D3SFA23
1.4	M1D4SF23	M1D4SFA23
1.6	M1D6SF23	M1D6SFA23
2.1	M2D1SF23	M2D1SFA23
3.1	M3D1SF23	M3D1SFA23
3.5	M3D5SF23	M3D5SFA23
4.2	M4D2SF23	M4D2SFA23
5.2	M5D2SF23	M5D2SFA23
6.3	M6D3SF23	M6.3SFA23
7.0	M7D0SF23	M7D0SFA23
7.8	M7D8SF23	M7D8SFA23
10.4	M10D4SF23	M10D4SFA23
14	M14SF23	M14SFA23
21	M21SF23	M21SFA23
32	M32SF23	M32SFA23
46	M46SF23	M46SFA23

†**Note:** Catalog Numbers shown are 23" overall length; also available in 26" length. For 26" links, drop the last two digits.

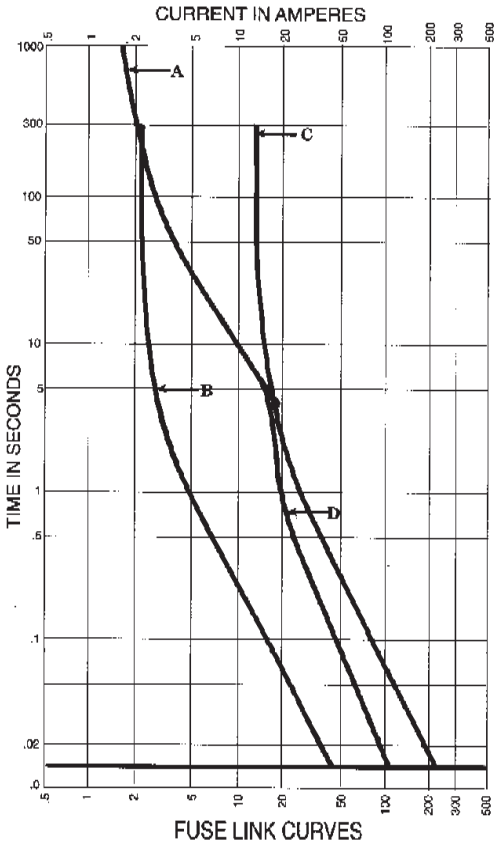

Curve A Safe Loading Curve for 5kVA 7200 V. Transformer
Curve B Average Melting Curve for NEMA 1 Amp. K
Curve C Average Melting Curve for NEMA 6 Amp. K
Curve D Average Melting Curve for .7 Amp. SloFast Fuse Link

Cutouts (Standard, Linkbreak & Loadbreak) and Cutout-Arrester Combinations

Warranty - Material

Hubbell Power Systems, Inc. warrants all products sold by it to be merchantable (as such term is defined in the Uniform Commercial Code) and to be free from defects in material and workmanship. Buyer must notify the Company promptly of any claim under this warranty. The Buyer's exclusive remedy for breach of this warranty shall be the repair or replacement, F.O.B. factory, at the Company's option, of any product defective under the warranty which is returned to the Company within one year from the date of shipment. NO OTHER WARRANTY, WHETHER EXPRESS OR ARISING BY OPERATION OF LAW, COURSE OF DEALING, USAGE OF TRADE OR OTHERWISE IMPLIED, SHALL EXIST IN CONNECTION WITH THE COMPANY'S PRODUCTS OR ANY SALE OR USE THEREOF. The Company shall in no event be liable for any loss of profits or any consequential or special damages incurred by Buyer. The Company's warranty shall run only to the first Buyer of a product from the Company, from the Company's distributor, or from an original equipment manufacturer reselling the Company's product, and is non-assignable and non-transferable and shall be of no force and effect if asserted by any person other than such first Buyer. This warranty applies only to the use of the product as intended by Seller and does not cover any misapplication or misuse of said product.

Warranty - Application

Hubbell Power Systems, Inc. does not warrant the accuracy of and results from product or system performance recommendations resulting from any engineering analysis or study. This applies regardless of whether a charge is made for the recommendation, or if it is provided free of charge.

Responsibility for selection of the proper product or application rests solely with the purchaser. In the event of errors or inaccuracies determined to be caused by Hubbell Power Systems, Inc., its liability will be limited to the re-performance of any such analysis or study.

CAUTION: The equipment covered in this catalog section should be installed, used, and serviced only by competent personnel familiar with and following good work and safety practices. This equipment is for use by such personnel and is not intended as a substitute for adequate training and experience in safe procedures for this type of equipment.

This catalog information and any related instruction sheets do not cover all details or situations in equipment use nor do they provide for every possible contingency to be encountered in relation to installation, operation or maintenance. Should additional information and details be desired, or if specific situations arise that are not covered adequately for the user's purpose the specifics should be referred to Hubbell Power System, Inc.

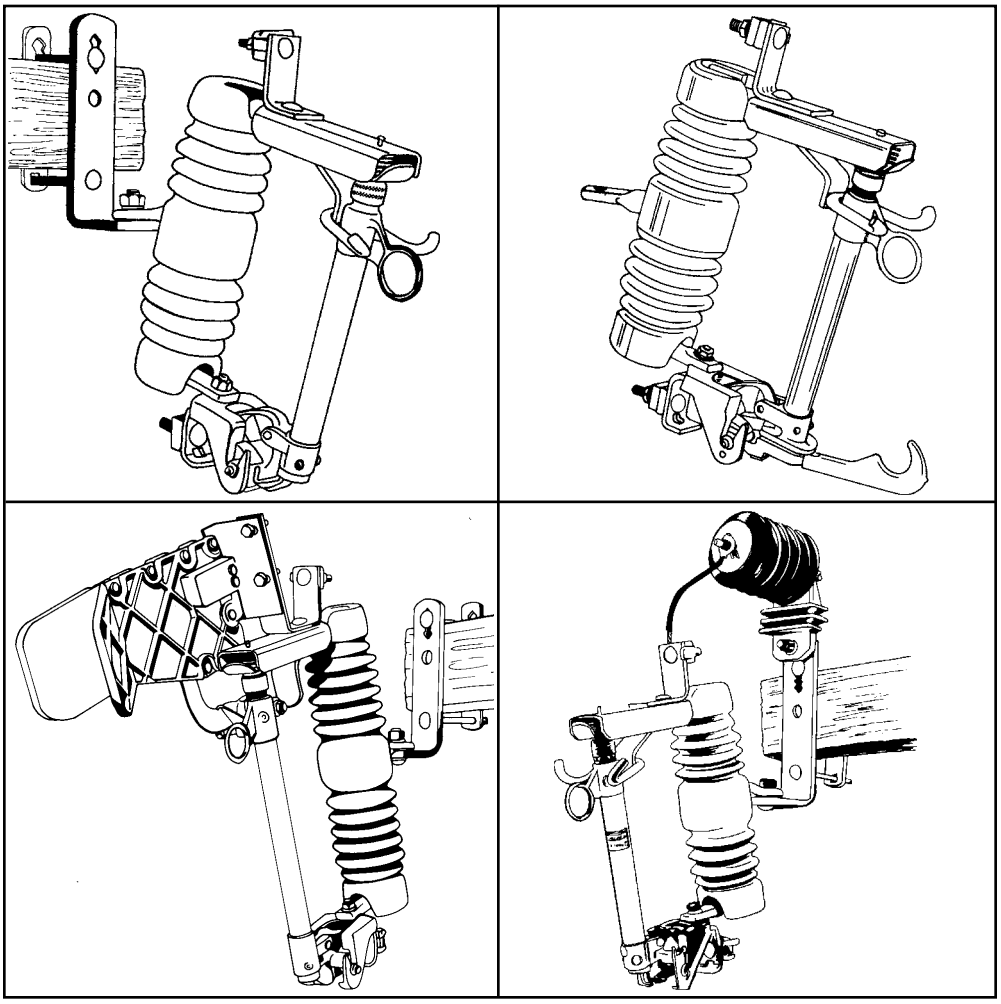

NOTICE: For latest revision of our Catalog and Literature, please visit our web site: *www.hubbellpowersystems.com*

NOTE: Because Hubbell has a policy of continuous product improvement, we reserve the right to change design and specifications without notice.

©Copyright 2010 Hubbell Incorporated • 210 North Allen Street • Centralia, MO 65240 USA
www.hubbellpowersystems.com
E-mail: hpsliterature@hps.hubbell.com

Type C Cutouts

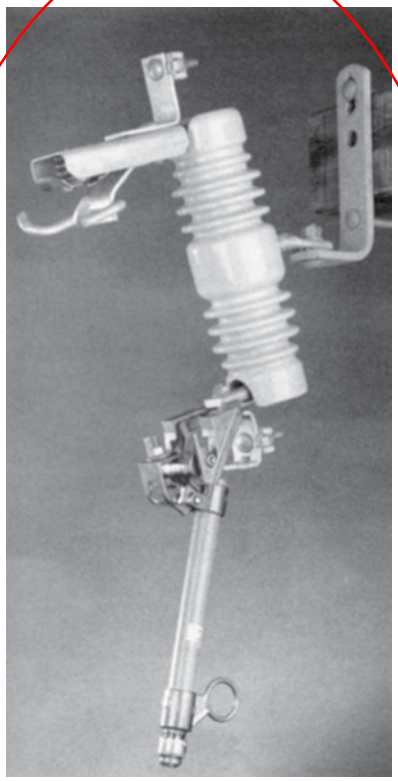

STANDARD cutout,
pages 3-7

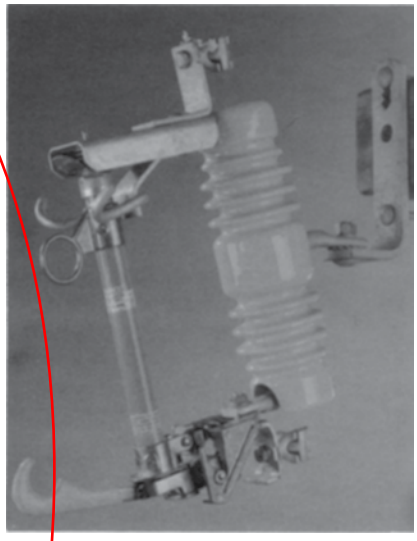

LINKBREAK cutout,
pages 8-10

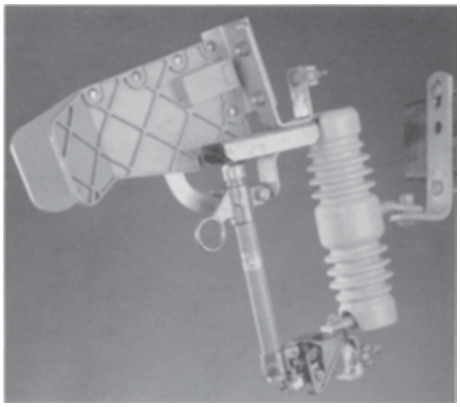

LOADBREAK cutout
with Arc-Chute interrupter,
pages 11-13

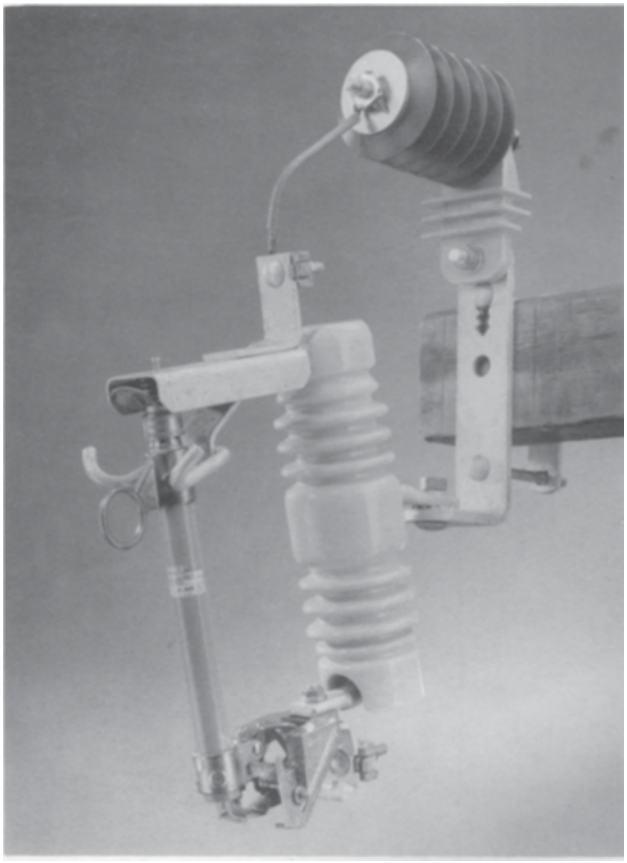

CUTOUT-ARRESTER
Combinations,
page 14

Application

The primary purpose of any cutout is to provide protection to the lines of your system and the various apparatus on those lines such as transformers and capacitor banks. Chance Type C cutouts provide reliable protection from low-level overloads that just melt the fuse link, intermediate faults, and very high faults, through maximum interrupt capacity.

In addition, Type C cutouts can also be used as a sectionalizing device. With the use of a portable loadbreak tool, Type C cutouts can function much like an overhead disconnect switch. A 300 amp disconnect blade is also available for this purpose.

Ratings/Specifications

STANDARD Type C cutouts have maximum design voltage ratings to simplify the confusing ratings of cutouts. There are **no restrictions** on application to grounded wye, ungrounded wye, or delta systems having maximum operating voltages (line-to-line) equal to or less than the cutout maximum design voltage rating. (See the LINKBREAK and LOADBREAK cutouts for their specifications.) Interruption tests have been performed at full system line-to-line voltage. In each voltage class, there are continuous current ratings of 100 amps, 200 amps and 300 amps. See the table on page 6 for other specifications.

Type C STANDARD Cutout

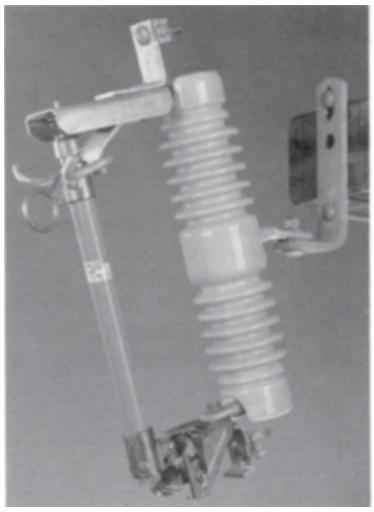

100 Amp
Single Vent

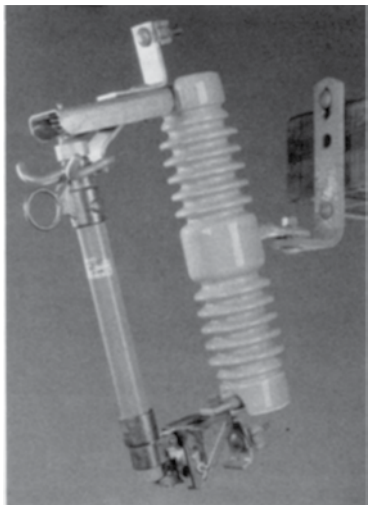

200 Amp
Single Vent

300 Amp
Disconnect

Chance Type C fuseholders are also mutually interchangeable with the S & C Electric Company's Type XS cutout.

Quality Construction

Efficient Current Transfer

The Chance Type C cutout has an all copper current path. All contacts are silver-plated. Terminals are tin-plated bronze for use with copper or aluminum conductors.

Loadbreak Hooks

Galvanized steel hooks are standard on all Type C cutouts, except the arc chute version, for use with a portable loadbreak tool. These sturdy hooks are mounted on the top support and serve to guide the fuseholder into the latch socket when closing at an off-center angle.

Top Contact

The top contact is attached to the galvanized-steel hood by a stainless rivet to provide a smooth self-aligning action during closing even in severely corrosive environments. The top contact provides a socket-type cavity for latching the fuseholder and prevents any possible "over-travel" of the fuseholder. The top contact is made of a highly conductive copper strip with silver-plated embossments to resist corrosion. The contacts are held under constant pressure designed to maintain firm contact with the fuseholder contact surface until fault interruption is accomplished.

Hinge

The hinge on the Type C cutout employs large pivot areas for the fuseholder's trunnion and is cast of a copper alloy chosen for its strength and corrosion resistance. The hinge contacts are highly conductive copper alloy stampings and are plated to assure low resistance current transfer from the trunnion casting. The parallel current paths are backed up by high strength cantilever springs and are riveted to the hinge castings. Fuseholder can be dropped into place and easily lifted up and out. No tricky maneuvering.

Insulators

The insulators used on Type C cutouts are a sky-glaze gray. The metal to metal leakage distance on the 15 kV cutout insulator is 8.7 inches (220 mm), 12.6 inches (320 mm) on the 27 kV [125 kV LIW (BIL)], 17.3 inches (440 mm) on the 27 kV [150 kV LIW (BIL)], 26 inches (660 mm) on the 36 kV [170 kV LIW (BIL)], and 28.4 inches (720 mm) on the 36 kV [170 kV LIW (BIL)].

Fuseholders

The solid cap on the single vent fuseholder is a copper alloy, silver-plated to provide efficient current transfer. An integral ring is provided in the top tube casting for opening and closing the fuseholder with conventional disconnect tools from the ground, from a bucket truck or from the pole.

The **toggle type trunnion casting** is a selective **silver-plated bronze** for efficient current transfer to the lower hinge contacts. A cam shaped projection on each side of the trunnion casting provides high pressure parallel current paths to the lower contacts. These projections, or pivot pins, are cast full round for smooth rotational operation in the hinge. The link ejector assists in arc interruption during low fault current or excessive overload conditions. A groove in the center of the link ejector allows the fuse link's pigtail to go directly from the fuse tube to the attachment nut. A curved ejector minimizes bending stresses in the pigtail to prevent broken strands. A stainless steel torsion spring on the link ejector helps to rapidly eject the link from the bore of the fuseholder during interruption. The 200 amp link ejector has a wider groove area and increased spring force to accommodate the larger links.

The **link ejector** is pinned to the trunnion casting with a stainless steel pin to provide resistance to corrosive elements and provide smooth pivotal action. An interlocking feature between the link ejector and tube casting prevents excessive tension on the fuse link during closure, thereby preventing link breakage.

The **link ejector** employs a hammer effect to enhance toggle action of the trunnion during low fault and overload interruptions, hence dropout action is enhanced. The link ejector provides sufficient surface area to facilitate re-fusing by linemen wearing gloves.

Type C STANDARD Cutout

PRODUCT FEATURES

Interchangeability

Chance was the first to design a cutout that could interchange fuseholders and mounting assemblies with those of another manufacture. Standard Type C fuseholders and mounting assemblies are mutually interchangeable with the S&C Electric Company's Type XS cutout (within the same voltage class).

Fusetube

The 1/2-inch inside diameter of the Type C cutout's 100 ampere fusetube increases internal pressure giving superior and reliable expulsion action. During frequently encountered intermediate fault ranges this diameter also permits higher TRV (transient recovery voltage) values to be tolerated. This small bore design eliminates any concern related to high impedance phase-to-phase faults on ungrounded wye and delta systems.

The inside liner is constructed of a synthetic arc-quenching material. The tube is made of fiberglass which permits the smaller bore and provides a higher burst strength. It is protected from the weather and environment by a special ultra-violet resistant coating.

Also, the Chance fusetube operates with fuselinks from all major suppliers.

Brackets

C cutouts come packed one per carton including a NEMA Heavy Duty "B" bracket with captive 1 1/2" bolt for crossarm mounting.

Type X brackets, also for crossarm mounting, provides 2 5/8" additional clearance between the crossarm and the cutout.

"D" brackets are used to mount cutouts and/or arresters directly to the pole. Three brackets may be used for three-phase application. Type D brackets provide a clean, quick mounting without crossarm or special pole bands.

All the above brackets are galvanized steel for long lasting service. Cutouts can be ordered without any brackets.

Higher Interrupt Capacities

By using a copper arc shortening rod inside the top of the fusetube, higher interrupt ratings are obtainable. An arc shortening rod is attached to the cap of some fusetubes and lowers the fuse link within the fusetube. This permits a much shorter arc, resulting in less arc energy, and higher interrupting capacities.

For 200 A tubes, it allows for full voltage rating.

It is necessary to use fuse links with removable buttonheads when arc shortening rods are employed.

170 kV LIW (BIL)

A 170 kV BIL Type C cutout is available for use in areas where the 28.4-inch minimum leakage distance to ground is required. See ordering data, page 6.

Extra Corrosion Protection [150 & 170 kV LIW (BIL) only]

Type C cutouts are available with components of stainless steel inserts, hood and bolts, and copper alloy loadbreak hooks to offer greater corrosion resistance for environmental areas where corrosion can become a major factor. To order a stainless steel/copper alloy cutout add the suffix "S" to the end of the catalog number with the rating specifications desired. In additon, an optional spring assist may be provided to further enhance the toggle and drop out action in highly corrosive applications.

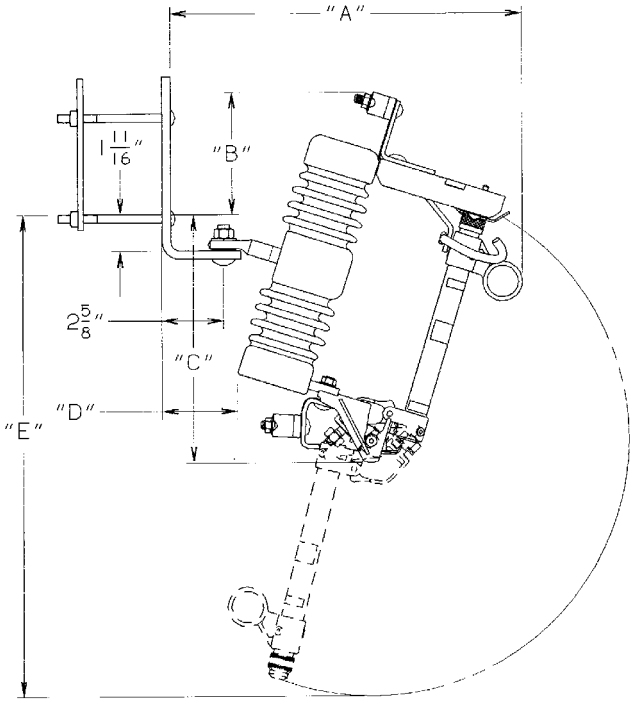

STANDARD Type C Cutout with NEMA Type B Bracket Dimensions

kV LIW (BIL)	A	B	C	D	E
110	16"	5 1/2"	10 3/4"	3 1/2"	21 1/2"
	406 mm	137 mm	273 mm	89 mm	559 mm
125	16 3/8"	7 1/8"	12 1/2"	3 1/8"	26 3/4"
	416 mm	181 mm	318 mm	79 mm	679 mm
150	16 3/8"	7 1/8"	12 1/2"	3 1/8"	26 3/4"
	416 mm	181 mm	318 mm	79 mm	679 mm
170	17 1/4"	8 1/2"	15"	1 3/4"	32 1/2"
	438 mm	216 mm	381 mm	44 mm	826 mm

Terminals

Tin-plated bronze parallel groove type terminals are standard on Type C cutouts. They can accommodate aluminum or copper conductor sizes ranging from No. 6 (13.3 mm^2) solid copper through 4/0 (160.6 mm^2) ACSR or 250 (167.5 mm^2) kcmil stranded copper. The parallel groove design is perfect for handling two different sizes of conductor as is the case when arresters are being used. Eyebolts are also available. See ordering data, page 10A-6.

Compare Chance® quality and technical expertise
Type C STANDARD Cutout

All Type C Cutouts meet or exceed ANSI/NEMA specifications.

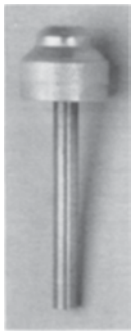

COPPER ARC-SHORTENING ROD (ON SOME RATINGS)

TWO-PLACE LOCKING TO PREVENT SIDE MOVEMENT OF HOOD, CONTACTS OR HOOKS

TIN-PLATED BRONZE TERMINALS FOR USE WITH COPPER OR ALUMINUM CONDUCTOR

COPPER CURRENT PATH

GALVANIZED-STEEL CHANNEL

BIRD-PROOFED ONE-PIECE SOLID-PORCELAIN INSULATOR

STAINLESS STEEL BACKUP SPRING TO MAINTAIN CONTACT PRESSURE

SILVER-TO-SILVER CONTACTS

GALVANIZED STEEL HOOKS FOR LOADBREAK TOOL

SYNTHETIC FUSE TUBE LINER

CAST BRONZE TOP TUBE CASTING AND PULL RING

HIGH-STRENGTH FIBERGLASS FUSETUBE COATED WITH ULTRA-VIOLET INHIBITOR

HOT STICK HOLE IN TRUNNION CASTING

LARGE NUT TO FASTEN FUSELINK WITHOUT BREAKING STRANDS

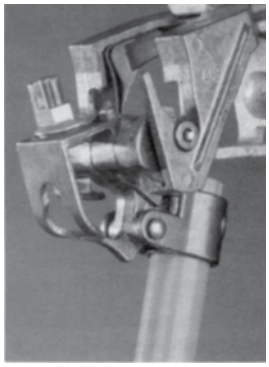

CAST BRONZE LOWER TUBE CASTING

COPPER CURRENT PATH

STAINLESS-STEEL SPRING ENSURES PROPER TOGGLE ACTION OF FUSELINK EJECTOR (CAST-BRONZE ON ALL 200 AND LINKBREAK FUSEHOLDERS; STAINLESS-STEEL ON ALL 100A)

SILVER-TO-SILVER CONTACTS WITH STAINLESS STEEL BACKUP SPRINGS

MECHANICAL ASSIST:

FUSEHOLDER IS AVAILABLE WITH A TORSIONAL SPRING ON TRUNNION TO AID DROP OUT OPERATION IN CORROSIVE ENVIRONMENTS.

FUSEHOLDER TOGGLE LATCH LIMITS TENSION OF FUSELINK

CAST BRONZE HINGE FOR CORROSION RESISTANCE

CHANCE® Type C STANDARD Cutout

Specifications and Ordering Information

See page 10A-15 for Accessories.

All Type C Cutouts meet or exceed ANSI/NEMA specifications.

15 kV - 110 kV LIW (BIL) — RUS Listed

*Base Catalog No.	*Option suffixes below	Maximum Design Voltage	Nominal System Voltage	Continuous Current (Amps)	Interrupt Capacity (Asym Amps)	Leakage to Ground Metal to Metal		*Weight (lb./kg.)	Replacement Fusetube Cap	Arc Shortening Rod
C710112	1 2 3	15 kV	Thru 14.4 kV	100	10,000	8.7"	220 mm	14.23 /6.45	P7001535P	No
C710114	1 2 3	15 kV	Thru 14.4 kV	100	16,000	8.7"	220 mm	14.43 /6.55	E7001767P	Yes‡
C710143	1 2 3	15 kV	Thru 14.4 kV	200	12,000	8.7"	220 mm	15.03 /6.82	E7002146P	Yes‡
C710133	1 2 3	15 kV	Thru 14.4 kV	300	12,000**	8.7"	220 mm	14.53 /6.59	P7001535P	N/A

27 kV - 125 kV LIW (BIL) — RUS Listed

C710211	1 2 3	27 kV	Thru 24.9 kV	100	8,000	12.6"	320 mm	17.73 /8.04	P7001535P	No
C710213	1 2 3	27 kV	Thru 24.9 kV	100	12,000	12.6"	320 mm	17.03 /7.72	E7001768P	Yes‡
C710242	1 2 3	27 kV	Thru 24.9 kV	200	10,000	12.6"	320 mm	17.73 /8.04	E7002479P	Yes‡
C710233	1 2 3	27 kV	Thru 24.9 kV	300	12,000**	12.6"	320 mm	17.23 /7.82	P7001535P	N/A

27 kV - 150 kV LIW (BIL) — RUS Listed

C710311	1 2 3	27 kV	No Restrictions thru 24.9 kV; †26.4 thru 34.5 kV	100	8,000	17.3"	440 mm	22.63/10.26	P7001535P	No
C710313	1 2 3	27 kV	No Restrictions thru 24.9 kV; †26.4 thru 34.5 kV	100	12,000	17.3"	440 mm	22.83/10.36	E7001768P	Yes‡
C710342	1 2 3	27 kV	No Restrictions thru 24.9 kV; †26.4 thru 34.5 kV	200	10,000	17.3"	440 mm	23.43/10.63	E7002479P	Yes‡
C710333	1 2 3	27 kV	No Restrictions thru 24.9 kV; †26.4 thru 34.5 kV	300	12,000**	17.3"	440 mm	23.03/10.45	P7001535P	N/A

36 kV - 170 kV LIW (BIL) — RUS Listed

C710613	1 2 3	36 kV	Thru 34.5 kV	100	11,200	26"	660 mm	25.43/11.54	E7001743P	Yes‡
C710643	1 2 3	27 kV	No Restrictions thru 24.9 kV; †26.4 thru 34.5 kV	200	12,000	26"	660 mm	25.83/11.72	E7002117P	Yes‡
C710633	1 2 3	36 kV	Thru 34.5 kV	300	12,000**	26"	660 mm	25.43/11.54	P7001535P	N/A

NOTE: 26" fuse links are recommended.

36 kV - 170 kV LIW (BIL) — RUS Listed

C710713	1 2 3	36 kV	Thru 34.5 kV	100	11,200	28.4"	720 mm	30.73/13.94	E7001743P	Yes‡
C710743	1 2 3	27 kV	No Restrictions thru 24.9 kV; †26.4 thru 34.5 kV	200	12,000	28.4"	720 mm	31.13/14.12	E7002117P	Yes‡
C710733	1 2 3	36 kV	Thru 34.5 kV	300	12,000**	28.4"	720 mm	30.73/13.94	P7001535P	N/A

NOTE: 26" fuse links are recommended.

*Adjust total weight when selecting Options below. **Momentary rating — Solid blade ‡Must use removable buttonhead fuse links.

†For application on single-phase to neutral or three-phase solidly-grounded wye-connected circuits where recovery voltage does not exceed the maximum-design voltage of the device.

*Option Suffix 1

Terminal Variations

Suffix 1	Description	*Weight (lb./kg.)
P	Parallel-groove clamps	0.33/0.15
E	Small eyebolts	0.16 /0.07
L	Large eyebolts	0.31/0.14

Must specify one selection for Option 1.

*Option Suffix 2

Bracket Variations

Suffix 2	Description	*Weight (lb./kg.)
B	NEMA Heavy Duty "B" bracket for crossarm (1 1/2" bolt)	2.84/1.29
X	Extended type bracket for crossarm (Horizontal section is 2 5/8" longer than Type B bracket)	3.75/1.70
D	D-shape bracket (pole)	7.67/3.48
Z	No bracket (must be used with M in Option 3)	—
Blank	No bracket (cannot use with M in Option 3)	—

*Option Suffix 3

Mechanical Assist Fuseholder

Suffix 3	Description
Blank	No option (may not be used with Z in Option 2)
M	Mechanical Assist Fuseholder (may not be used with Blank in Option 2)
F	Fargo cutout cover (available for 15 kV only) (may not be used with Blank in Option 2)

Accessories

Terminal Connectors

Catalog No.	Description	Wt. (lb./kg.)	Min. Order Qty.
T7001325	Parallel-Groove Clamp, tin-plated bronze for No. 6 solid thru 4/0 ACSR or 250 kcmil stranded	0.33 / 0.15	10
T7001326	Small Eyebolt for No. 8 solid thru 2/0 stranded	0.16 / 0.07	10
T7001327	Large Eyebolt for No. 6 solid thru 4/0 ACSR or 250 kcmil stranded	0.40 / 0.14	10

Mounting Brackets

C2060283	NEMA Heavy Duty "B" Bracket with 1½" captive bolt for crossarm mounting	3.84 / 1.20	—
C2060280	Extended Crossarm Bracket (Horizontal section is 2⅝" longer than NEMA "B" bracket)	3.75 / 1.70	—
C2060290	"B" Pole Mounting Bracket	7.67 / 3.48	
C2060632	Cutout/Arrester Bracket complete with carriage bolts and backstrap	4.00 / 1.81	—

Mounting Bracket Dimensions

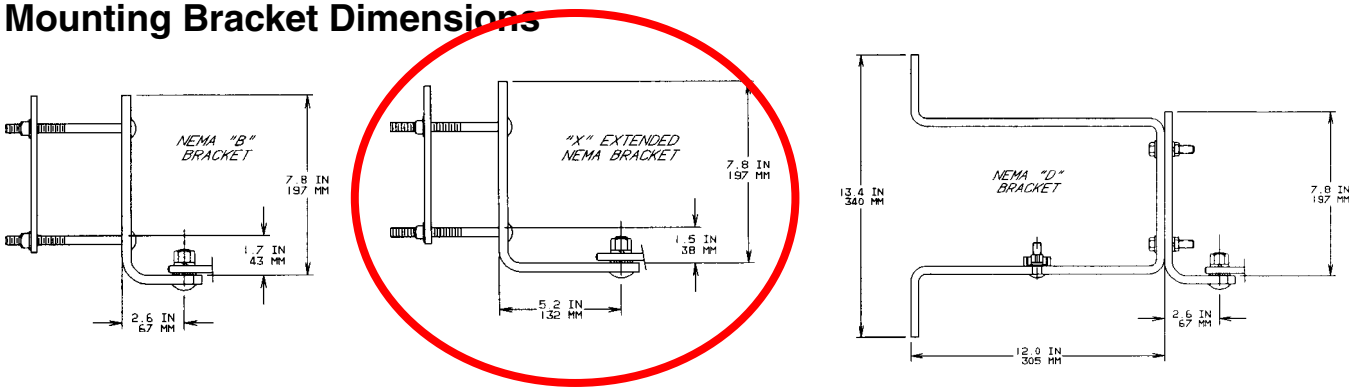

Fargo Cutout Cover

ONE PIECE WILDLIFE PROTECTOR

Fastener installation locations (2 fasteners per assembly)

Available as an Option on Standard and Linkbreak Type C-Porcelain Cutouts (see pages 10A-6 and 10A-10), Cover also may be ordered as a separate line item as **Catalog No. CC101**. **Material:** Proprietary low track vinyl that is UV stabilized for long-term performance. Gray color.

• Designed to provide protection for cutouts from accidental contact by squirrels, birds or other wildlife.

• Universal one-piece design for easy installation or retrofit. Fits Chance 15 kV Standard and Linkbreak Cutouts, both Polymer and Porcelain types.

Universal Cutout Tool

Ideal for Standard and Linkbreak 100 amp fuse holders (ABB, Chance, S&C) to easily lift out, place, *open and close. Inverted, secure method also fits Chance Electronic Sectionalizers.

Cat. No. **PSC4033484** (Wt. 4 oz.) See Tools Catalog Section 2100.

When opening a cutout, follow all work rules and OSHA regulations.* ***Not for use with Loadbreak cutouts.*

Optima

Distribution Class (PDV) and Riser Pole (PVR) Surge Arresters

HUBBELL®
Power Systems

NOTE: Because Hubbell has a policy of continuous product improvement, we reserve the right to change design and specifications without notice.

©Copyright 2010 Hubbell Incorporated

OHIO BRASS – AIKEN, SC, USA Printed in USA JULY 2010

Table of Contents

Page

Warranty 31-2
Introduction 31-3
Distribution Surge Arresters 31-3
  Alloy ESP Housing 31-3
  Basic Construction 31-3
  Benefits 31-3
Tests Verify PDV/PVR Arrester Design 31-4
  Full Scale Fault Current Tests 31-4
  Design Test Report Summary 31-4
  Optima Design Improvements 31-4
  Disconnector 31-4
PDV/PVR
  Selection Considerations 31-5
  Temporary Overvoltage 31-5
  TOV Curve Without Optima 31-6
  TOV Curve PDV100-Optima 31-6
  TOV Curve PDV65-Optima 31-7
  TOV Curve PVR-Optima 31-7
Mounting Hardware
  How to Specify a 7XXX Code Suffix 31-8
  Options Table 31-8
Insulation Coordination/Protective Margin 31-9
Electrical Characteristics 31-10
Physical Characteristics
  Dimensions 31-11
  Leakage Distances 31-11
Typical Mounting Configurations
  and Hardware Diagrams 31-12
  Tightening Torques for PDV/PVR Arrester Fasteners 31-12

Warranty - Material

Hubbell Power Systems, Inc. warrants all products sold by it to be merchantable (as such term is defined in the Uniform Commercial Code) and to be free from defects in material and workmanship. Buyer must notify the Company promptly of any claim under this warranty. The Buyer's exclusive remedy for breach of this warranty shall be the repair or replacement, F.O.B. factory, at the Company's option, of any product defective under the warranty which is returned to the Company within one year from the date of shipment. NO OTHER WARRANTY, WHETHER EXPRESS OR ARISING BY OPERATION OF LAW, COURSE OF DEALING, USAGE OF TRADE OR OTHERWISE IMPLIED, SHALL EXIST IN CONNECTION WITH THE COMPANY'S PRODUCTS OR ANY SALE OR USE THEREOF. The Company shall in no event be liable for any loss of profits or any consequential or special damages incurred by Buyer. The Company's warranty shall run only to the first Buyer of a product from the Company, from the Company's distributor, or from an original equipment manufacturer reselling the Company's product, and is non-assignable and non-transferable and shall be of no force and effect if asserted by any person other than such first Buyer. This warranty applies only to the use of the product as intended by Seller and does not cover any misapplication or misuse of said product.

Warranty - Application

Hubbell Power Systems, Inc. does not warrant the accuracy of and results from product or system performance recommendations resulting from any engineering analysis or study. This applies regardless of whether a charge is made for the recommendation, or if it is provided free of charge.

Responsibility for selection of the proper product or application rests solely with the purchaser. In the event of errors or inaccuracies determined to be caused by Hubbell Power Systems, Inc. , its liability will be limited to the re-performance of any such analysis or study.

NOTE: Because Hubbell has a policy of continuous product improvement, we reserve the right to change design and specifications without notice.

©Copyright 2010 Hubbell Incorporated

Introduction

The PDV100 arrester was introduced in 1986 as the very first U.S. non-ceramic arrester for heavy duty applications. Now, 22 years and 20 million arresters later, we are pleased to introduce the newest additions to the Ohio Brass arrester family and the Optima product line.

For distribution voltages, the new PDV65-Optima and PVR-Optima add all the benefits of polymer arresters, combined with a new disconnector which improves system reliability and increases TOV capability. The PVR-Optima targets cable applications where low discharge voltages promote longer cable life. The PDV65-Optima is our normal duty arrester offering cost effective protection.

These new Optima arresters join an impressive list of advances that Ohio Brass has brought to arrester technology since it began making arresters in 1950. Improvements in design, such as the Optima have increased protective margins and durability. More important in terms of dollars and service reliability, Ohio Brass arresters have generated substantial savings for utilities. On the following pages are additional benefits and capabilities of our arresters.

Benefits of the Optima

- Improved Isolator Disconnector Reliability
- Isolator Design Good Down to One Amp Operation
- Saves Utilities Money and Improves System Reliability
- Higher 60 Hz TOV Capability
- Field Proven Sealing System

Basic Construction

In Optima arresters, the Varistors are locked in place with tightly wound layers of fiberglass filament impregnated with epoxy resin. The arrester housing is made from our proprietary blend of ESP silicone alloy. In addition to ESP's exceptional performance as an insulator material, ESP's properties have been confirmed in a series of performance tests which include tracking resistance, contamination, aging, and seal design.

Optima arresters can be used with all standard mounting arms and brackets. They come with all the necessary fasteners, isolators, and terminal attachments. A specially designed glass-filled polyester insulating bracket, with integrated disconnector, along with optional mounting brackets such as the cross arm or transformer bracket, enable mounting the arrester in a way which best suits each individual customer. Below is a typical cross section view of one of our distribution type arresters.

Typical Cutaway
(Arrester Only)

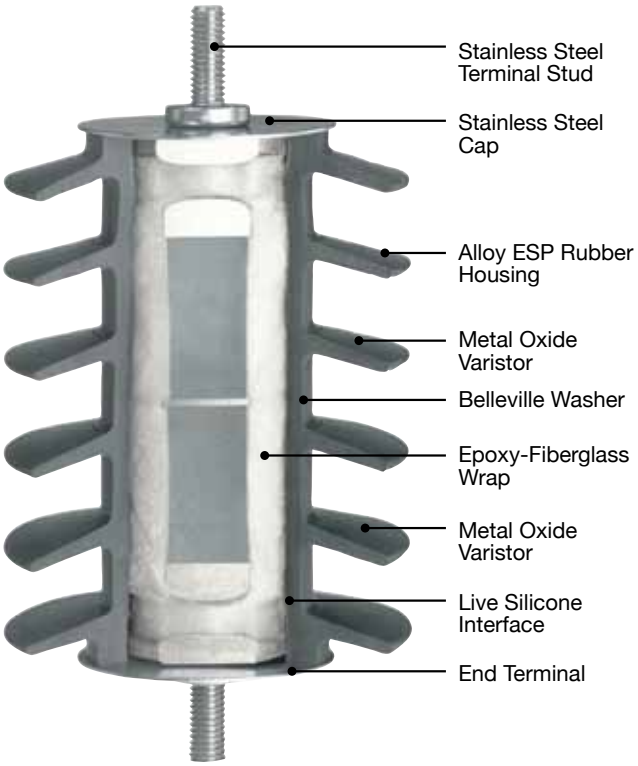

Tests Verify PDV/PVR Arrester Design

Full Scale Fault Current Tests

Short circuit design tests were performed on PDV65-Optima, PDV100-Optima, and PVR-Optima arresters in accordance with Section 8.18 of IEEE C62.11-2006 Standard. Eight arresters of each type were tested. Per the standard, four samples were tested at the claimed high current withstand capability. Two of these samples were assembled with internal fuse wires. The other two were good arresters which were subjected to an overvoltage condition, which failed the arrester (with a weak source). The arrester was immediately subjected to the claimed high current fault current. Two additional arresters were subjected to fault currents approximately half of the claimed high current value. The fault current duration for all high current tests was 12 cycles. Finally, two arresters were subjected to a nominal 600 amp, 1 second fault current test. All test arresters were 17 kV MCOV, the longest single module configuration used for each arrester type. Tests were performed at full voltage (17 kV rms).

Successful performance was demonstrated when the epoxy-fiberglass wrapped arrester modules burned through to relieve internal pressures associated with the fault current arcing. In all cases, the arrester remained intact, except at the high current levels which caused polymer housing fragmentation, which is acceptable.

The following table summarizes the claimed short circuit capabilities for the arresters.

Arrester Type	Short Circuit Test Current $A_{(rms)}$	Short Circuit Test Duration-Sec.
PDV65-Optima	15,000	.20
PDV65-Optima	7,500	.20
PDV65-Optima	500	1.0
PDV100-Optima	20,000	.20
PDV100-Optima	10,000	.20
PDV100-Optima	600	1.0
PVR-Optima	20,000	.20
PVR-Optima	10,000	.20
PVR-Optima	500	1.0

PDV/PVR Design Test Report Summary

The PDV100-Optima and PDV65-Optima arresters have been tested in accordance with IEEE Standard C62.11-2006 for metal-oxide surge arresters. There is no standard for PVR arresters so they were tested per the heavy duty requirement.

The PDV100-Optima/PVR-Optima meet or exceed all the requirements for heavy-duty distribution arrester designs. The PDV65-Optima meets or exceeds all requirements for normal duty surge arresters.

The table below summarizes the capabilities of these designs.

Test	PDV100-Optima & PVR-Optima	PDV65-Optima
High Current-Short Duration	2 - 100 kA Discharges	2 - 65 kA Discharges
Low Current Long Duration	20 - 250A x 2000 µsec Discharges	20 - 75A x 2000 µsec Discharges
Duty Cycle	20 - 10 kA plus 2 - 40 kA Discharges	22 - 5 kA Discharges

The above is merely a summary of a portion of the design tests performed on PDV/PVR arresters. Contact your Ohio Brass sales representative for complete test reports on these two arresters.

Optima Design Improvements

The Optima incorporates a redesigned disconnector and a new line end protective cap. Both of these are aimed at improving the overall system reliability.

Improved Disconnector Reliability

Historically distribution class surge arresters were installed with a ground lead disconnecting device. The purpose of this component is to allow a failed (shorted) arrester to automatically disconnect from the line. This allowed the line to quickly be returned to service and also provided a visual indication to crews as to which arrester had failed and needed to be replaced.

Occasionally under conditions that allowed a low fault current to flow through the arrester - damage will occur to the disconnector's internal grading resistor. When this condition occurs the disconnector will not operate. With the introduction of polymer arrester designs this situation was aggravated since it was nearly impossible to identify a failed arrester from the ground and the circuit would be locked out. The Optima design incorporates a capacitor-graded Optima disconnector into the insulated bracket attached to the base end of the arrester.

The following curve shows that the low current end of the detonation range for the capacitor-graded Optima disconnector has been extended from 20 amps down to 1 amp. This assures proper disconnector operation even at very low fault current levels.

Optima Disconnector Detonation Curve

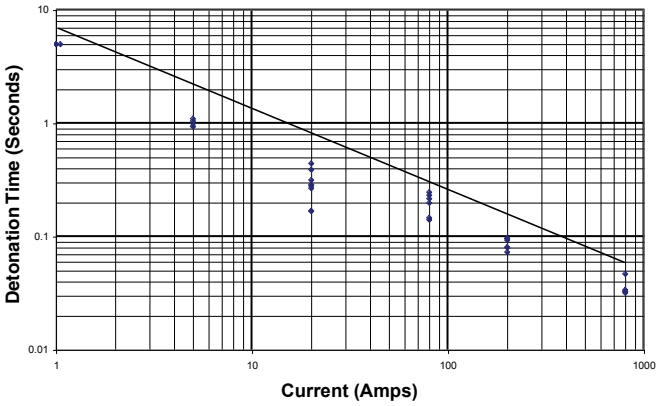

Laboratory testing has confirmed that the electrical integrity of the capacitor-graded Optima disconnector is not affected by exposure to prolonged TOV conditions or 100 kA lightning duty. In the unlikely event of arrester failure, it does ensure proper detonation of the disconnector, separating the arrester ground lead and preventing lockout from occurring.

Universal Protective Cap for PDV100 & PDV65 Optima

The new Optima line end protective cap is designed for single or thru connection lead wires. Each side of the cap has webbed fingers which prevent accidental contact with the arrester top end hardware by wildlife.

Selection Considerations

NORMALLY RECOMMENDED PDV/PVR MCOV FOR VARIOUS SYSTEM VOLTAGES			
System L-L Voltage kV		Arrester MCOV-kV	
Nominal	Maximum	Effectively Grounded (Wye) Neutral Circuits	Impedance Grounded, Ungrounded, or Delta Circuits
2.4	2.54	—	2.55
4.16	4.4	2.55	5.1
4.8	5.08	—	5.1
6.9	7.26	—	7.65
12.0	12.7	7.65	12.7
12.47	13.2	7.65	—
13.2	13.97	8.4	—
13.8	14.52	8.4	15.3
20.78	22.0	12.7	22.0
22.86	24.2	15.3	22.0
23.0	24.34	—	22.0
24.94	26.4	15.3	—
34.5	36.5	22.0	29.0

Selection of arrester size is based upon the maximum continuous operating voltage (MCOV) that is applied across the arrester in service (line-to-ground). For arresters on effectively grounded systems, this is normally the maximum line-to-ground voltage — e.g., 7.65 kV on a 12.47 kV multi-grounded system. For ungrounded or impedance-grounded systems, the MCOV should be at least 90 percent of maximum phase-to-phase voltage. Smaller arresters than shown may be used, contact your Ohio Brass representative for details.

For convenience, the data shown in this catalog includes the traditional duty-cycle voltage rating associated with the MCOV of each arrester.

The selection of the actual type will be primarily governed by the insulation being protected.

Temporary Overvoltage

MOV arresters by nature are voltage sensitive devices. At normal line to ground voltages, the arrester is energized at its MCOV (Maximum Continuous Operating Voltage) and conducts very little current. During disturbances on the system, the arrester can see elevated voltages and therefore higher 60Hz current through the unit. The magnitude and duration of the system-generated temporary over voltage (TOV) that the arrester can withstand is best expressed graphically. The two curves on the next page shows the TOV capability versus time for OB distribution style arresters. The Optima demonstrates an improved TOV capability. The capacitance-based isolator in Optima improves the TOV capability while increasing the reliability of disconnector function. The Optima technology results in a family of TOV curves that are a function of voltage rating of the arrester. Curves for other ratings can be found in our design test report online at http://www.hubbellpowersystems.com. Contact your HPS representative for more information on this new technology.

ANSI No Prior Duty TOV Curves, Distribution Arresters Without Optima Bracket

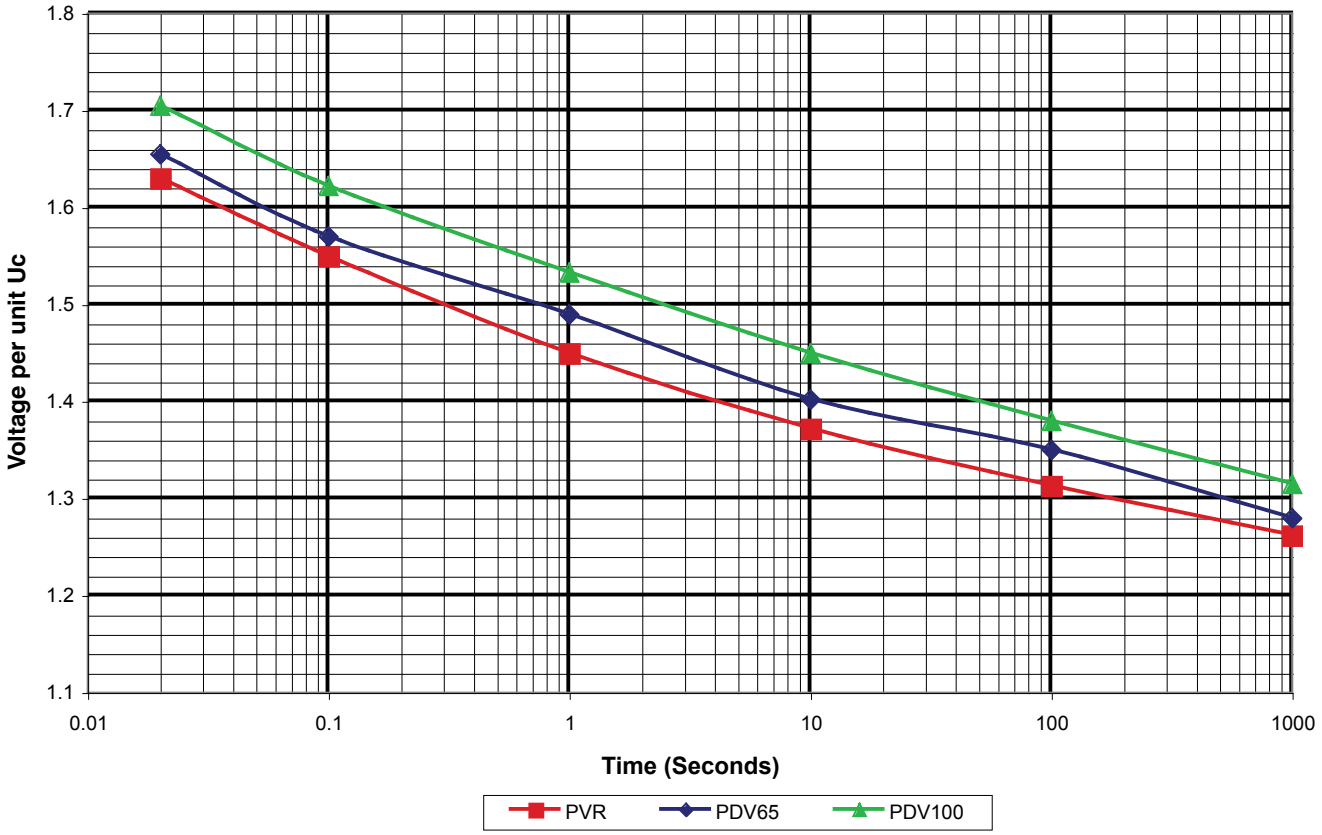

ANSI No Prior Duty TOV Curves for PDV100-Optima Arresters

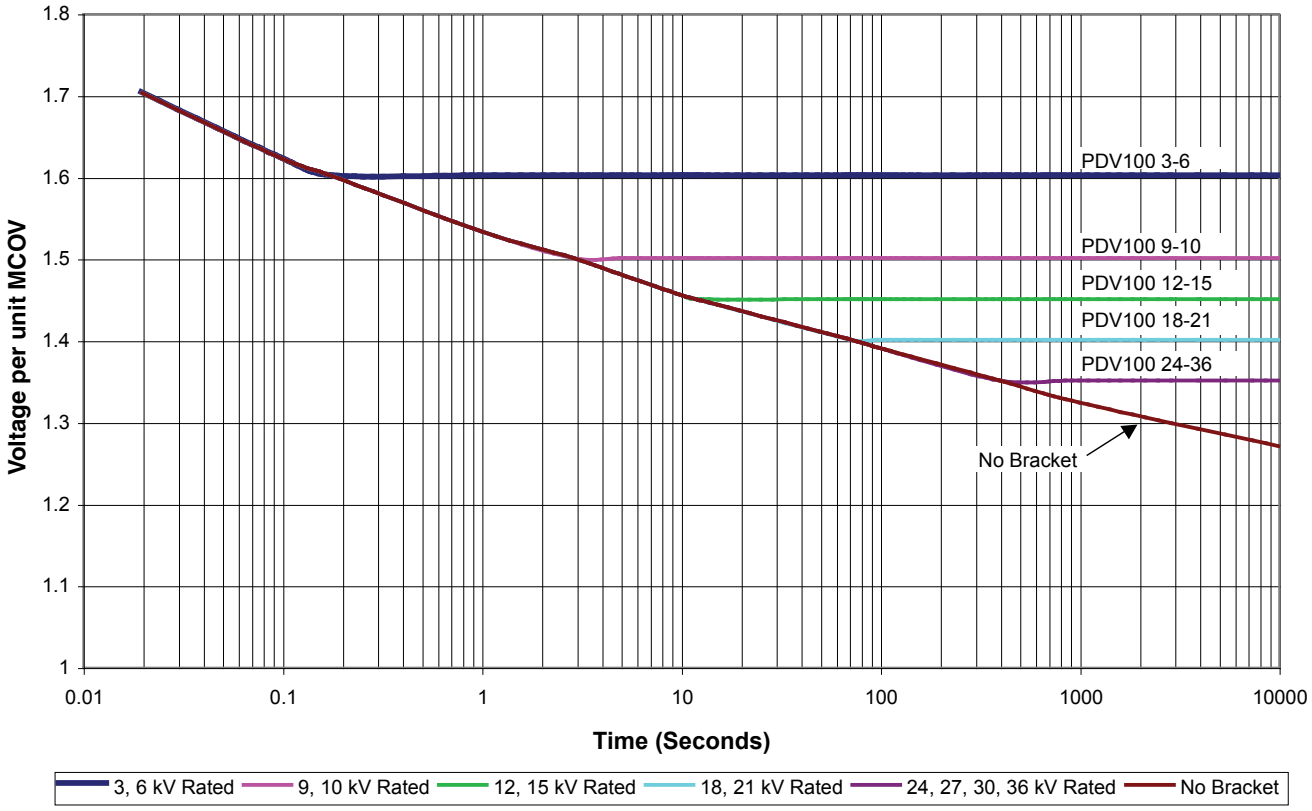

ANSI No Prior Duty TOV Curves for PDV65-Optima Arresters

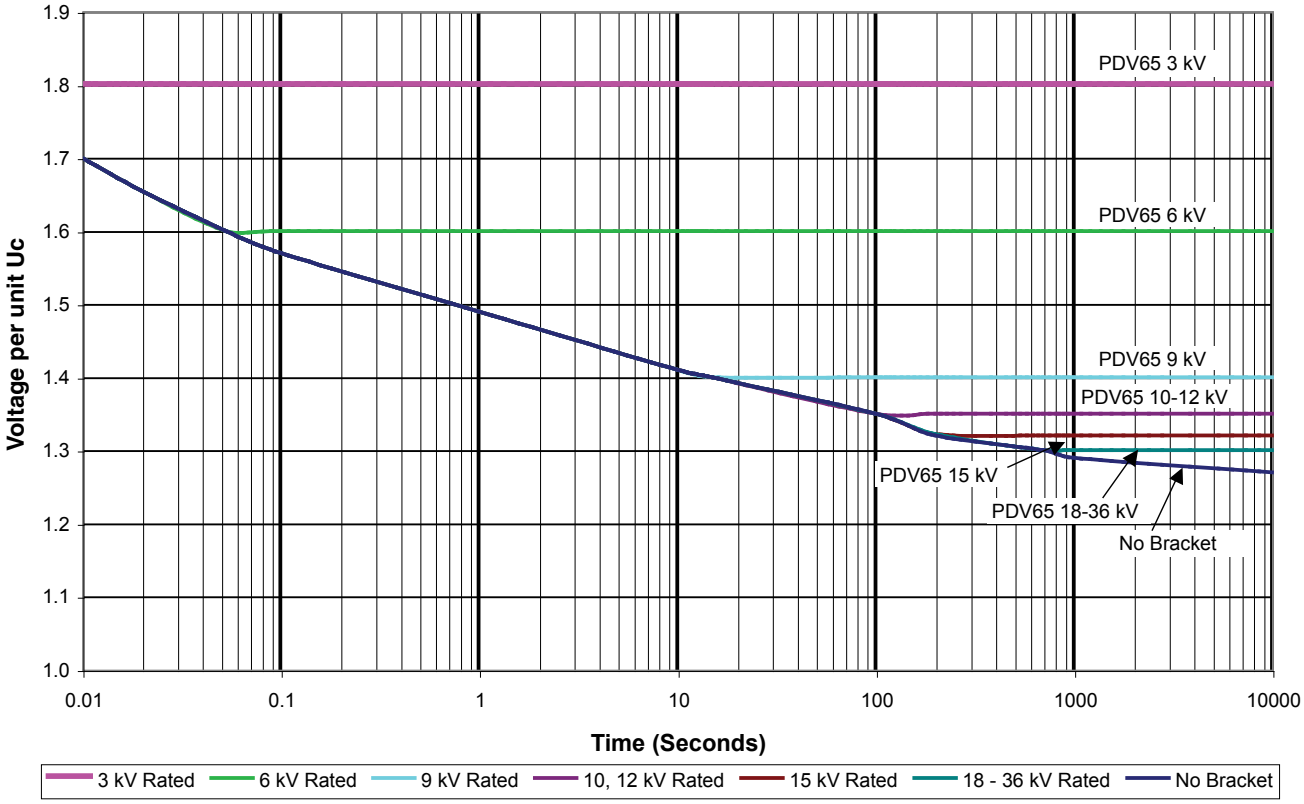

ANSI No Prior Duty TOV Curves for PVR-Optima Arresters

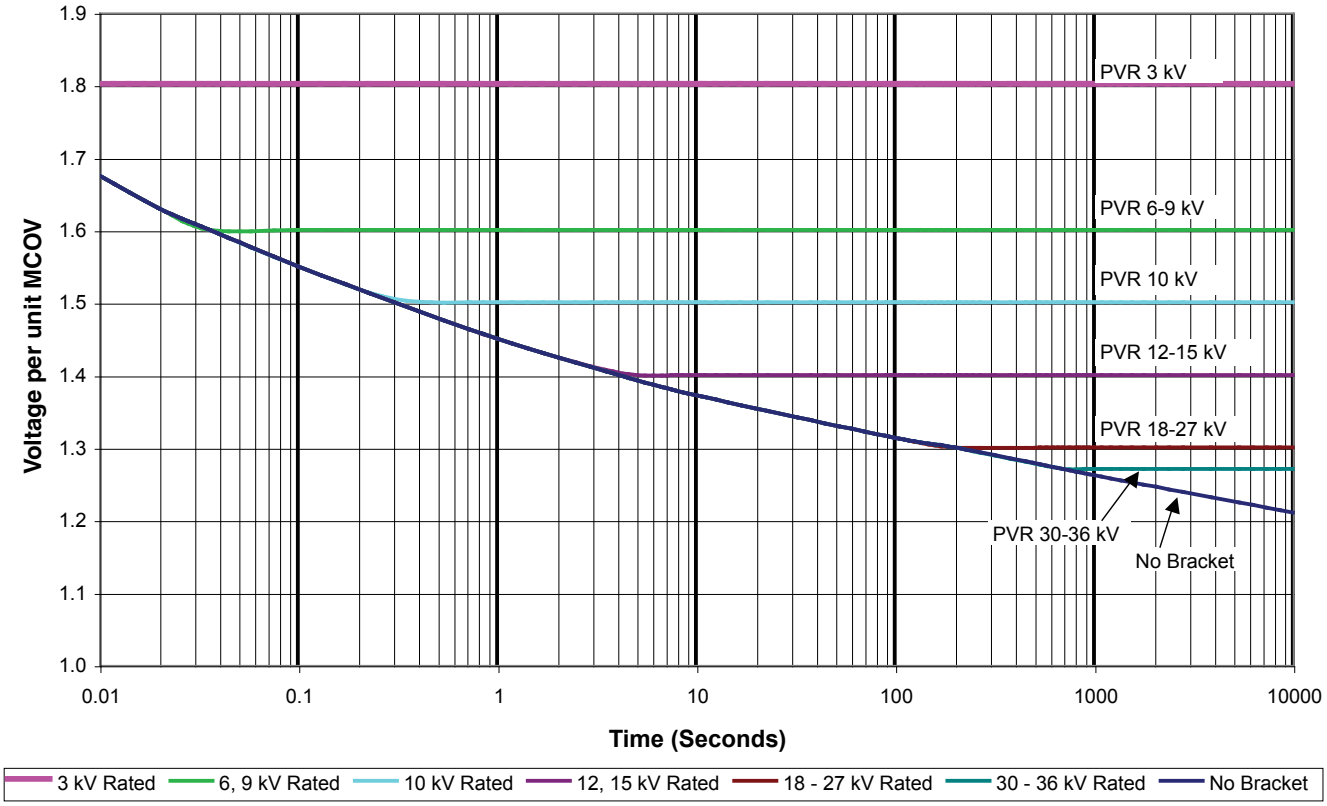

How to Specify a 7XXX Suffix Hardware Code

Procedure

(Example) To obtain the 7000 code suffix number for a 10 kV duty cycle rated PDV65-Optima arrester equipped with a line terminal, wire clamp, insulating base bracket, NEMA crossarm hanger for a 4 x 5 crossarm and a ground lead isolator with terminal nut, follow this procedure:

Step 1 - The catalog number of the basic 10 kV PDV65-Optima arrester is 217259.
Step 2 - The 72XX code in the table below specifies the top terminal and wire clamp.
Step 3 - The 7X2X code specifies the insulating base bracket and 4 x 5 NEMA crossarm hanger.
Step 4 - The 7XX4 code specifies the ground lead isolator, terminal nut and nut.
Step 5 - Combine the three suffix digits following the 7 in their correct order gives us the suffix code: 7224.
Step 6 - Order the arrester by complete catalog number 2172597224.

For all PDV100 & PDV65 Optima Arresters:

The 73XX code will be the only one with a cap. The 74XX code is not available since the Optima only has one cap style which is the newest design.

For all PVR Optima Arresters Cap 73XX and 74XX are available.

Notes:

1. The ground isolator identified in codes 7003, 7004 and 7005 is an integral part of the insulating base bracket. The color for the insulating base bracket/ground lead isolator assembly is ANSI-70 gray.
2. Code 7030 identifies the insulating base bracket/transformer mounting bracket combination. The transformer mounting bracket used in code 7030 is Ohio Brass part number 2730664004 (≤ 8.4 kV MCOV) and 2730254004 (≥ 10.2 kV MCOV). A drawing of the 273066 bracket is included on page 12 to assist in applying this arrester. Contact your HPS representative for further information.
3. All terminals are solderless, clamp type, suitable for conductor sizes from No. 6 AWG solid to No. 2 AWG stranded.

If the spacing of the mounting holes on mounting brackets listed are not suitable for the intended application, other mounting brackets are available and in these cases, the HPS sales representative should be consulted.

TABLE A TOP TERMINAL HARDWARE

	71XX 3/8" Stud (No Option)	72XX Nut & Wire Clamp	73XX Nut, Wire Clamp & Protective Cap (One Slot) (Optima)	74XX Nut, Wire Clamp & Protective Cap (One Hole) (PVR only)	75XX Nut, Wire Clamp, Protective Cap (One Slot), & 18" Wire Lead	76XX Flipper Fuse Assembly Nut & Wire Clamp	77XX Nut, Wire Clamp, 3-Piece Protective Cap

TABLE B MOUNTING HARDWARE

7X0X No Bracket No Isolator	7X1X Insulated Base Bracket with Isolator	7X2X Insulated Base Bracket with Isolator & NEMA 4x5 X-Arm Bracket	7X3X Insulated Base Bracket with Isolator and Transformer Bracket	7X4X Insulated Base Bracket with Isolator and NEMA Angle Bracket	7X5X Insulated Base Bracket with Isolator & NEMA 6x6 X-Arm Bracket	7X6X Metal Base Mounting Strap	7X7X Metal Base Mounting Strap and NEMA 4x5 X-Arm Bracket

TABLE C LOWER TERMINAL HARDWARE

	7XX1* 3/8" Stud (No Option)	7XX2* Nut, Washers & Threaded Terminal Nut	7XX3 Isolator, Nut, Ground Strap Washer	7XX4 Isolator, Nut, Washer & Threaded Terminal Nut	7XX5 Isolator, Nut, Protective Cap (2 Slot), Washer & Threaded Terminal Nut	7XX6* Ground Strap, Nut, Washers & Threaded Terminal Nut	7XX7* Nut, Washers & Threaded Terminal Nut

* Must be ordered in conjunction with codes 7000, 7060 or 7070.

Insulation Coordination

These electrical characteristics are used to determine protective margins for insulation levels in use.

These two figures illustrate a 34.5 kV effectively grounded system, 150 kV BIL, protected with 22 kV MCOV Type PDV arresters.

Figure 1 shows equipment protected with a PDV100-Optima arrester Catalog Number 213722 and Figure 2 shows the same equipment protected with a PDV65-Optima arrester Catalog Number 213272.

The protective margins are calculated using the following formula:

$$\left(\frac{\text{Insulation Level}}{\text{Arrester Discharge Voltage}} - 1\right) \times 100 = \%\ \text{Margin}$$

The insulation levels are obtained from the manufacturer of the equipment being protected. The arrester discharge voltages are obtained from the table on page 8.

For example, the protective margin for the BIL is determined by first finding the arrester discharge voltage at the impulse current level selected. In this example, the 10 kA discharge current is used as representative of typical lightning stroke currents discharged through the arrester. The 10 kA 8/20 discharge voltage of catalog number 213722 is 85.5 kV. The percent protective margin using the formula is:

$$\left(\frac{150\ \text{kV}}{85.5\ \text{kV}} - 1\right) \times 100 = 75\ \text{percent.}$$

The protective margins for other impulse currents are found in a similar fashion. In the case of the PDV65-Optima arrester, the 10 kA 8/20 discharge voltage of the arrester is 97.2 kV. This results in a protective margin of 54 percent.

These examples include many simplifying assumptions. Not included are the effects of faster rates of current rise on the discharge voltage, reduced insulation levels due to various factors, and line and ground leads.

For example, if the effect of lead length was included in the calculations and 1.6 kV per foot of lead length added to the discharge voltage of the arrester. With two feet of line lead and two feet of ground lead, 6.4 kV is added to the published discharge voltage of the arrester. Therefore, the discharge voltage of the PDV100-Optima is effectively 91.9 kV, resulting in a reduction of protective margin to 63 percent at 10 kA. In the case of the PDV65-Optima arrester, the 97.2 kV discharge voltage of the arrester is added to the 6.4 kV from the leads resulting in equipment seeing 103.6 kV reducing the protective margin to 44.7 percent.

The chopped wave strength of the insulation being protected is typically coordinated with the .5 µsec discharge voltage of the surge arrester. The heavy duty PDV100-Optima uses a 10 kA current while the PDV65-Optima catalog value is for a 5 kA peak current.

The switching surge insulation level of the equipment is coordinated with the 500 ampere switching discharge voltage of the surge arrester.

The effects of faster rates of rise and of reduced insulation strength due to aging effects would result in further reduced protective margins.

Industry standards recommend minimum margins of 20 percent for the chopped wave and BIL levels and 15 percent for switching surge protection.

Fig. 1

PDV100-Optima
METAL-OXIDE ARRESTER INSULATION COORDINATION
34.5 kV System

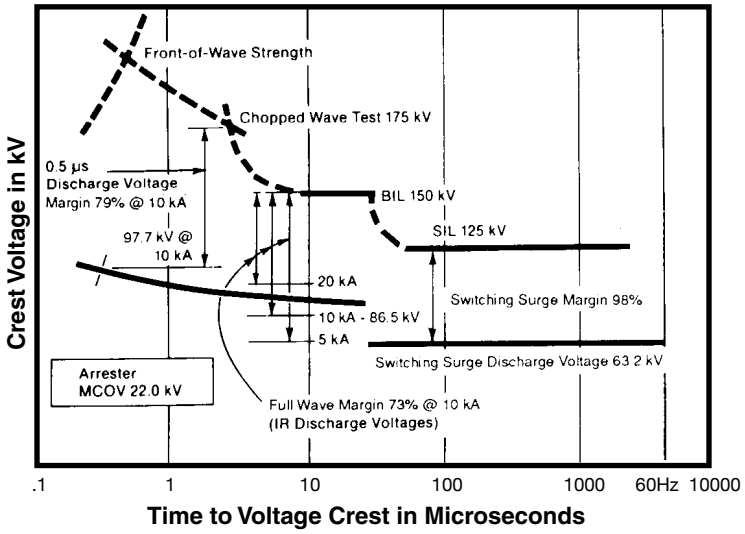

Fig. 2

PDV65-Optima
METAL-OXIDE ARRESTER INSULATION COORDINATION
34.5 kV System

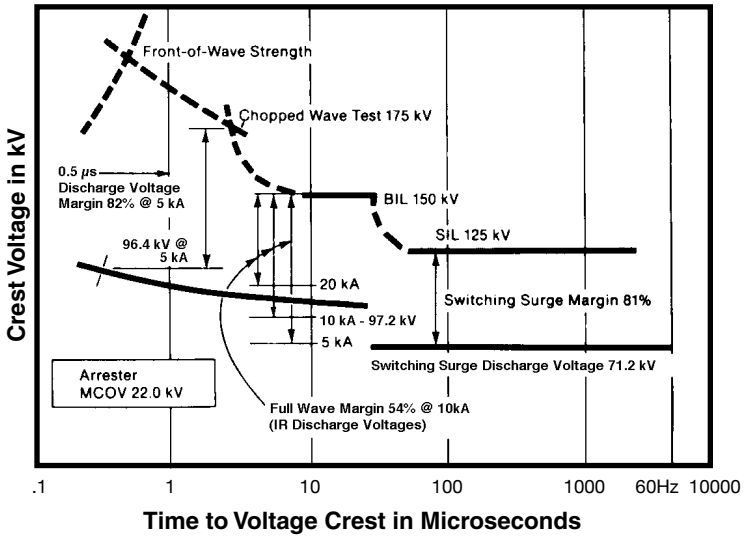

Electrical Characteristics

Heavy Duty
PDV100-Optima

Rated Voltage kV	MCOV kV	Unit Catalog Number	0.5 µsec 10kA Maximum IR-kV (1)	500 A Switching Surge Maximum IR-kV(2)	8/20 Maximum Discharge Voltage - kV					
					1.5 kA	3 kA	5 kA	10 kA	20 kA	40 kA
3	2.55	213703	10.6	7.6	8.0	8.5	9.0	9.9	11.1	13.2
6	5.1	213705	21.3	15.3	15.9	17.0	18.0	19.8	22.3	26.5
9	7.65	213708	31.2	22.4	23.3	24.9	26.4	29.0	32.6	38.8
10	8.4	213709	34.0	24.4	25.4	27.1	28.8	31.6	35.6	42.3
12	10.2	213710	40.4	29.0	30.3	32.3	34.2	37.6	42.3	50.3
15	12.7	213713	51.4	36.9	38.5	41.1	43.5	47.8	53.8	64.0
18	15.3	213715	60.6	43.5	45.4	48.4	51.3	56.4	63.5	75.5
21	17.0	213717	68.3	49.0	51.1	54.5	57.8	63.5	71.4	85.0
24	19.5	213720	81.9	58.8	61.3	65.5	69.3	76.2	85.7	102.0
27	22.0	213722	91.9	65.9	68.8	73.4	77.8	85.5	96.2	114.4
30	24.4	213724	101.1	72.5	75.7	80.7	85.5	94.0	105.8	125.8
36	29.0	213729	121.4	87.0	97.9	97.0	102.7	112.9	127.0	151.1

Normal Duty
PDV65-Optima

Rated Voltage kV	MCOV kV	Unit Catalog Number	0.5 µsec 10kA Maximum IR-kV (1)	500 A Switching Surge Maximum IR-kV(2)	8/20 Maximum Discharge Voltage - kV					
					1.5 kA	3 kA	5 kA	10 kA	20 kA	40 kA
3	2.55	217253	12.5	8.5	9.8	10.3	11.0	12.3	14.3	18.5
6	5.1	217255	25.0	17.0	19.5	20.5	22.0	24.5	28.5	37.0
9	7.65	217258	33.5	23.5	26.0	28.0	30.0	33.0	39.0	50.5
10	8.4	217259	36.0	25.4	27.0	29.5	31.5	36.0	41.5	53.0
12	10.2	217560	42.4	31.3	33.8	36.3	38.5	42.8	49.0	60.9
15	12.7	213263	54.0	39.9	43.1	46.3	49.0	54.4	62.4	78.0
18	15.3	213265	62.8	46.4	50.1	53.8	57.0	63.3	72.6	91.2
21	17.0	213267	68.3	50.5	54.5	58.5	62.0	68.9	79.0	98.3
24	19.5	217570	84.8	62.6	67.6	72.6	77.0	85.6	98.0	121.9
27	22.0	213272	96.4	71.2	76.9	82.6	87.5	97.2	111.4	139.0
30	24.4	213274	104.3	74.5	81.5	88.0	93.5	104.9	120.5	149.1
36	29.0	213279	125.6	92.8	100.2	107.6	114.0	126.7	145.2	176.7

Riser-Pole
PVR-Optima

Rated Voltage kV	MCOV kV	Unit Catalog Number	0.5 µsec 10kA Maximum IR-kV (1)	500 A Switching Surge Maximum IR-kV(2)	8/20 Maximum Discharge Voltage - kV					
					1.5 kA	3 kA	5 kA	10 kA	20 kA	40 kA
3	2.55	221603	9.9	6.6	7.2	7.8	8.2	9.1	10.4	12.3
6	5.1	221605	20.0	13.3	14.6	15.7	16.6	18.3	21.0	24.8
9	7.65	221608	26.8	17.8	19.5	21.0	22.2	24.5	28.1	33.2
10	8.4	221609	29.5	19.6	21.5	23.1	24.4	27.0	31.0	36.6
12	10.2	221610	35.5	23.6	25.9	27.9	29.4	32.5	37.3	44.0
15	12.7	221613	44.2	29.4	32.2	34.7	36.7	40.5	46.5	54.8
18	15.3	221615	53.4	35.5	38.9	41.9	44.3	48.9	56.1	66.2
21	17.0	221617	60.7	40.3	44.3	47.6	50.3	55.6	63.8	75.3
24	19.5	221620	70.9	47.1	51.7	55.6	58.7	64.9	74.4	87.9
27	22.0	221622	78.6	52.2	57.3	61.7	65.2	72.0	82.6	97.5
30	24.4	221624	88.5	58.7	64.5	69.4	73.3	81.0	92.9	110.0
36	29.0	221629	105.0	69.7	76.5	82.4	87.0	96.1	110.0	130.0

All Ohio Brass Arresters are fully compliant with ANSI/IEEE C62.11 Standard

(1) Maximum discharge voltage for a 10-kA impulse current wave which produces a voltage wave cresting in 0.5 µs. This can be used for coordination where front-of-wave sparkover was formerly used.

(2) Based on a 500A surge of 45-µs time to crest.

Physical Characteristics

Heavy Duty
PDV100-Optima

Rated Voltage	MCOV	Unit Catalog Number	Height with Insulating Base Bracket	Leakage Distance Terminal to Base	Mounting Clearance (1)		Approx. Net Weights		
					Center Line to Center Line	Center Line to Ground	Unit Only	Unit with Insulating Base Bracket	Unit with Insulating Base Bracket and NEMA Bracket
kV	kV		inches	inches	inches	inches	pounds	pounds	pounds
3	2.55	213703	6.8	8.5	5	3	1.9	2.9	5.4
6	5.1	213705	7.6	11.3	5.4	3.4	2.3	3.3	5.8
9	7.65	213708	8.7	14.4	6	4	2.8	3.8	6.3
10	8.4	213709	8.7	14.4	6.2	4.2	2.8	3.8	6.3
12	10.2	213710	9.3	17.0	7.5	5.5	3.3	4.3	6.8
15	12.7	213713	11.6	25.2	8.5	6.5	4.6	5.6	8.1
18	15.3	213715	11.6	25.2	9.5	7.5	4.6	5.6	8.1
21	17.0	213717	12.4	28.1	10.0	8.0	5.2	6.2	8.7
24	19.5	213720	14.8	36.5	12.0	10.0	7.0	8.3	10.8
27	22.0	213722	16.4	39.6	13.0	11.0	7.4	8.7	11.3
30	24.4	213724	16.9	42.2	14.0	12.0	7.9	9.2	11.7
36	29.0	213729	19.3	50.4	16.5	14.5	9.0	10.3	12.8

Normal Duty
PDV65-Optima

Rated Voltage	MCOV	Unit Catalog Number	Height with Insulat-ing Base Bracket	Leakage Distance Terminal to Base	Mounting Clearance (1)		Approx. Net Weights		
					Center Line to Center Line	Center Line to Ground	Unit Only	Unit with Insulating Base Bracket	Unit with Insulating Base Bracket and NEMA Bracket
kV	kV		inches	inches	inches	inches	pounds	pounds	pounds
3	2.55	217253	9.3	15.4	4.8	3	2.6	3.5	6.0
6	5.1	217255	9.3	15.4	5	3.2	2.6	3.5	6.0
9	7.65	217258	9.3	15.4	5.6	3.8	2.6	3.5	6.0
10	8.4	217259	9.3	15.4	5.8	4.1	2.6	3.5	6.0
12	10.2	217560	9.3	15.4	7.5	5.7	2.6	3.5	6.0
15	12.7	213263	12.3	25.5	8.5	6.7	4.2	5.2	7.1
18	15.3	213265	12.3	25.5	9.5	7.7	4.2	5.2	7.1
21	17.0	213267	12.3	25.5	10	8.2	4.2	5.2	7.1
24	19.5	217570	14.7	30.8	12	10.2	6.7	7.7	10.7
27	22.0	213272	17.7	40.9	13	11.2	6.7	7.7	10.7
30	24.4	213274	17.7	40.9	13.6	11.8	6.7	7.7	10.7
36	29.0	213279	20.7	51.0	16.2	14.4	8.2	9.2	11.2

Riser Pole
PVR-Optima

Rated Voltage	MCOV	Unit Catalog Number	Height with Insulat-ing Base Bracket	Leakage Distance Terminal to Base	Mounting Clearance (1)		Approx. Net Weights		
					Center Line to Center Line	Center Line to Ground	Unit Only	Unit with Insulating Base Bracket	Unit with Insulating Base Bracket and NEMA Bracket
kV	kV		inches	inches	inches	inches	pounds	pounds	pounds
3	2.55	221603	7.0	8.0	5.0	3.0	2.3	3.3	5.8
6	5.1	221605	9.4	15.4	5.3	3.3	3.1	4.1	6.6
9	7.65	221608	9.4	15.4	5.8	3.8	3.1	4.1	6.6
10	8.4	221609	9.4	15.4	6.0	4.0	3.1	4.1	6.6
12	10.2	221610	9.4	15.4	7.3	5.3	3.3	4.3	6.8
15	12.7	221613	12.4	26.0	8.3	6.3	4.5	5.5	8.0
18	15.3	221615	12.4	26.0	9.2	7.2	5.1	6.1	8.6
21	17.0	221617	12.4	26.0	9.7	7.7	5.1	6.1	8.6
24	19.5	221620	14.7	30.8	11.6	9.6	6.1	7.4	9.9
27	22.0	221622	21.1	52.0	12.5	10.5	8.3	9.6	12.1
30	24.4	221624	21.1	52.0	13.5	11.5	8.3	9.6	12.1
36	29.0	221629	21.1	52.0	16.0	14.0	9.5	10.8	13.3

(1) Center line to center line is equivalent to phase-to-phase; center line to ground is equivalent to phase-to-ground. These are recommended minimum clearances only and as such are not intended to take precedence over existing construction codes or specifications.

For appropriate packed weight, add 0.5 lb. per arrester.

Typical Mounting Configurations and Hardware

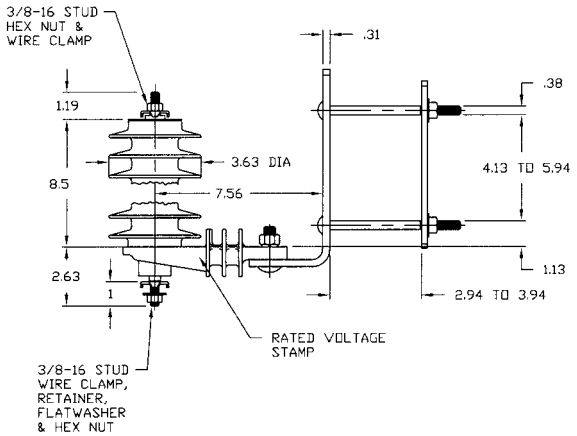

PDV65-Optima
Catalog No. 2172657224

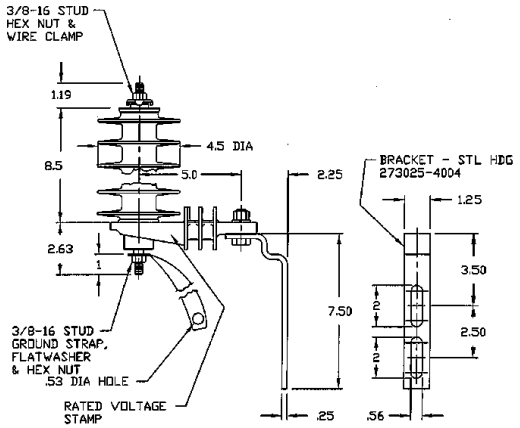

PVR-Optima
Catalog No. 2216157233

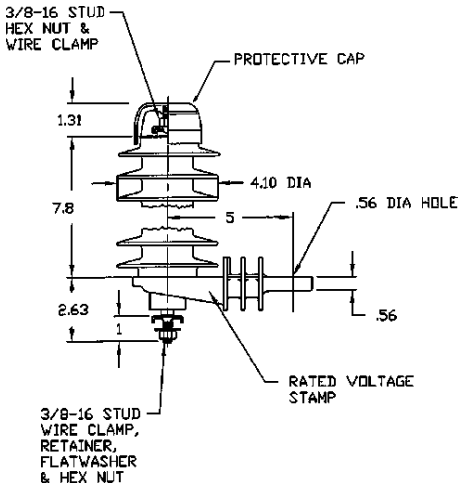

PDV100-Optima
Catalog No. 2137157314

RECOMMENDED TIGHTENING TORQUES FOR PDV ARRESTER FASTENERS

Fastener	Recommended Tightening Torque
⅜ inch line terminal	20 foot pounds
⅜ inch ground terminal	20 foot pounds
½ inch fastener connecting base bracket to crossarm or transformer sidewall bracket	20 foot pounds

Standard Mounting Brackets

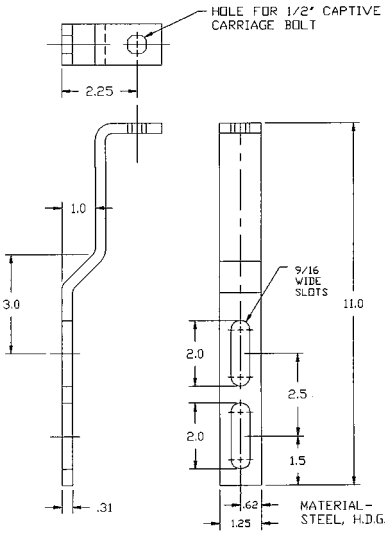

Transformer Mounting
Part No. 2730664004

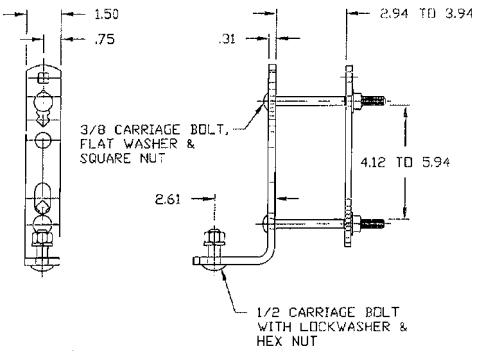

Crossarm Mounting
Part No. 2734563001

AFGHANISTAN ENGINEERING SUPPORT PROGRAM

WO-LT-0059A1T2
NEPS DISTRIBUTION MATERIALS AND INSTALLATION SPECIFICATION DEVELOPMENT

Amendment 1, Task 2, MV TRANSFORMER FUSING REPORT

September 10, 2013

DISCLAIMER

The author's views expressed in this publication do not necessarily reflect the views of the United States Agency for International Development or the United States Government.

Contents

1.0 MV Transformer Fusing Report Scope 1
1.1 Task Description 1
2.0 Analysis 1
2.1 Fusing Requirements 1
2.2 Analysis Methodology 1
2.2.1 Choice of Fuse Type 1
2.2.2 Magnetizing Inrush Withstand 2
2.2.3 Overload Capability 2
2.2.4 Isolation of Faulted Transformer 2
3.0 Conclusion 3
3.1 Fuse Link Size Selection 3
3.2 Fused Cutout 3
4.0 References 3

Appendices

Appendix A - Transformer Fuse Sizing Tables 5
Appendix B - Hubbell Power Systems K Fuse Catalog Cut Sheets 8
Appendix C - Minimum Melt TCCs for “K” fuse links 13
Appendix D - Total Clearing Time TCCs for “K” fuse links 15

1.0 MV Transformer Fusing Report Scope

1.1 Task Description

As Tetra Tech (Tt) is proceeding with the WO-LT-0059 Relay Coordination Study, deficiencies in the medium voltage (MV) system have been identified resulting from a lack of materials including MV distribution fuses and fuse links. Amendment No. 1, Task 2 for WO-LT-0059 was given NTP on July 27, 2013 by USAID to address these deficiencies by providing technical services to specify materials and support procurement, training for installation of the materials, and guidance relating to proper installation and maintenance of the specified materials.

This document describes the criteria used to select MV fuses and documents application of the criteria and the recommended fuse types and sizes. This report is Task 2 of Amendment No. 1 to Work Order WO-LT-0059.

2.0 Analysis

2.1 Fusing Requirements

MV Distribution transformer primary fusing must accommodate a number of requirements:

- Reliably energizing the transformer (magnetization inrush withstand)
- Protecting the transformer from severe overloads (Severe overload protection)
- Permitting short time overloads that will not damage the transformer (overload capability)
- Operating to disconnect faulted transformers from the primary distribution system to avoid unnecessary feeder outages (isolation of faulted transformer)

The application of distribution transformer primary fusing will involve a practical compromise between these sometimes competing goals.

Fuse time current characteristics are documented by fuse manufacturers on plots with the log of time on the vertical axis and the log of current on the horizontal axis. These plots are referred to as Time Current Characteristic curves (TCCs). There is a TCC for the minimum time that a fuse will melt (referred to as a “Minimum Melt” curve) and for the maximum time it will take a fuse to clear a fault (referred to as a “Total Clearing Time” curve). Minimum Melt and Total Clearing Time TCCs for “K” fuse links are included in Appendix C and Appendix D.

2.2 Analysis Methodology

The following discussion summarizes the considerations in arriving at the fusing recommendations in this report.

2.2.1 Choice of Fuse Type

Da Afghanistan Breshna Sherkat (DABS) has adopted fused cutouts using “K” fuse links for transformer protection on the 20kV distribution system based upon Reference [3]. K

fuse links can be used successfully for transformer protection, are readily available, and are already a DABS standard. Therefore, fusing recommendations are based upon using K fuse links.

2.2.2 Magnetizing Inrush Withstand

Fusing must allow for transformer energization.

Reference [1], the IEEE Buff Book, provides rules of thumb to avoid fuse damage during transformer magnetizing inrush as follow:

- Fuses must be able to withstand 25 times the transformer full load current for 0.01 seconds
- Fuses must be able to withstand 12 times transformer full load current for 0.1 seconds

The selected fuses meet these criteria with significant margin.

- The minimum melt curve at 0.013 seconds (the minimum time data is available from fuse Minimum Melt curves) is greater than 31 times transformer full load current
- At 0.1 seconds the minimum melt curve for all fuses is greater than 15 times transformer full load current

2.2.3 Overload Capability

Fusing is required to permit short time overloads that will not damage the transformer and is also required to protect transformers from severe overloads.

The ability for the fuse to withstand short term overloads can be expressed as the ratio between the value of the minimum melt curve at 300 seconds (5 minutes) and the transformer full load current. For convenience, this ratio will be referred to as the fusing ratio.

The minimum melt curve at 300 seconds (5 minutes) is at two times the nominal fuse rating. For example, the minimum melt curve value for a 40K fuse will be 80 A. The fusing ratio used by individual utilities reflects their judgment and policy with regard to the protection of distribution transformers and can vary significantly. Typical values are in the range of two to three (Reference [2]).

For this study, the smallest available fuse size which would provide a fusing ratio of at least 250% was selected. This allows the transformer to carry a 250% overload for five minutes, or greater overloads for a shorter period of time. The 250% fusing ratio balances the need for transformer protection from severe overloads and the ability to permit normal short term transformer overloading without nuisance fuse operations.

2.2.4 Isolation of Faulted Transformer

The interrupting ability of the fuse must exceed the fault current to isolate a faulted transformer unless there is also a feeder circuit breaker operation in response to the faulted transformer.

The fused cutouts identified in this report have a symmetrical interrupting rating of 8,000A at 50Hz. This rating is greater than anticipated available symmetrical short circuit current for all 15kV and 20kV circuits except for the 40MVA transformer at Kabul East, which is projected to have approximately 9,000A of available three phase fault current at the 15kV bus.

The available 3-phase line-to-ground (3LG) symmetrical fault current will be reduced to 8000A in a short distance (less than a km) from the substation. Very high magnitude (bolted) faults are rare, and the substation overcurrent protective relaying will operate instantaneously (no intentional time delay) de-energizing the circuit in approximately 0.12 seconds if a fault of this magnitude should occur. Consequently the additional expense, complexity, and stocking issues associated with providing a back-up current limiting fuse for this one instance is not recommended.

3.0 Conclusion

3.1 Fuse Link Size Selection

See Appendix A for the fuse link sizes recommended for typical distribution transformers at 15kV and 20kV. These tables also contain the requirements for transformer inrush (minimum values of minimum melt at 0.013 seconds and 0.1 seconds) and the corresponding values for the fuses selected to verify that the fuses inrush performance. The Fusing ratio is also calculated for each recommended fuse to demonstrate that fusing ratios in excess of 250% have been selected.

3.2 Fused Cutout

K Link fuses are installed within a drop-out fuse tube which in turn fits within the cutout body. Refer to the catalog cut sheets provided as part of the WO-LT-0059, Amendment No. 1, Task 1.B deliverable for a visual representation. Manufacturer cut sheets are also included in this report as Appendix B.

The K Link fuse recommendations are based upon their use in distribution fused cutouts that will provide a symmetrical interrupting capacity of 8,000 A at 50 Hz. This type of product is manufactured by Hubbell Power Systems and Hubbell Power Systems catalog numbers will be provided as part of WO-LT-0059A1, Task 3, Material and Installation Specifications.

4.0 References

[1] IEEE Std 242-2001 – IEEE Recommended Practice for Protection and Coordination of Industrial and Commercial Power Systems (buff book), p 189

[2] Distribution System Protection Manual – McGraw Edison Company, pp. 62-63.

[3] Technical specifications, Chapter L, Ministry of Energy and Water, Dasht-e-Barchi Distribution Project, Bidding Documents November 2009

Appendices

Appendix A - Transformer Fuse Sizing Tables

15 kV Transformer Fuse Sizing Table

Transformer Size (kVA)	K Link Rating (A)	FLA[1] (A)	25 x FLA	K Link Minimum Melt at .013 sec[2] (A)	15 x FLA	K Link Minimum Melt at 0.1 sec[2] (A)	2.5 x FLA	K Link Minimum Melt at 300 sec[2] (A)	Fusing Ratio[3]
25	**2**	0.96	24	85	14.4	30	2.41	4	4.2
50	**3**	1.92	48	120	28.9	43	4.81	6	3.1
75	**6**	2.89	72	195	43.3	72	7.22	12	4.2
100	**6**	3.85	96	195	57.7	72	9.62	12	3.1
160	**8**	6.16	154	250	92.4	96	15.40	16	2.6
200	**10**	7.70	192	340	115.5	125	19.25	20	2.6
250	**15**	9.62	241	550	144.3	210	24.06	30	3.1
315	**20**	12.12	303	700	181.9	270	30.31	40	3.3
400	**20**	15.40	385	700	230.9	270	38.49	40	2.6
500	**25**	19.25	481	970	288.7	360	48.11	50	2.6
630	**40**	24.25	606	1450	363.7	550	60.62	80	3.3
800	**40**	30.79	770	1450	461.9	550	76.98	80	2.6
1000	**50**	38.49	962	1850	577.4	700	96.23	100	2.6
1250	**65**	48.11	1203	2550	721.7	980	120.28	130	2.7
1600	**80**	61.58	1540	3000	923.8	1150	153.96	160	2.6

Notes:

1. Full load Amperes, which is current at transformer nameplate rating. FLA is equal to the the transformer rated kVA divided by the square root of 3 times the phase to phase voltage in kV.
2. Fuse Minimum Melt fuse curves.
3. Minimum Melt current at 300 seconds divided by FLA, in percent.
4. Fuse data from Hubbell K-Link Minimum Melt Curves

20 kV Transformer Fuse Sizing Table

Transformer Size (kVA)	K Link Rating (A)	FLA[1] (A)	25 x FLA	K Link Minimum Melt at .013 sec[2] (A)	15 x FLA	K Link Minimum Melt at 0.1 sec[2] (A)	2.5 x FLA	K Link Minimum Melt at 300 sec[2] (A)	Fusing Ratio[3]
25	**1**	0.72	18	42	10.8	14	1.80	2	2.8
50	**2**	1.44	36	85	21.7	30	3.61	4	2.8
75	**3**	2.17	54	120	32.5	43	5.41	6	2.8
100	**6**	2.89	72	195	43.3	72	7.22	12	4.2
160	**6**	4.62	115	195	69.3	72	11.55	12	2.6
200	**8**	5.77	144	250	86.6	96	14.43	16	2.8
250	**10**	7.22	180	340	108.3	125	18.04	20	2.8
315	**15**	9.09	227	550	136.4	210	22.73	30	3.3
400	**15**	11.55	289	550	173.2	210	28.87	30	2.6
500	**20**	14.43	361	700	216.5	270	36.08	40	2.8
630	**25**	18.19	455	970	272.8	360	45.47	50	2.7
800	**30**	23.09	577	1140	346.4	470	57.74	60	2.6
1000	**40**	28.87	722	1450	433.0	550	72.17	80	2.8
1250	**50**	36.08	902	1850	541.3	700	90.21	100	2.8
1600	**65**	46.19	1155	2550	692.8	980	115.47	130	2.8

Notes:

1. Full load Amperes, which is current at transformer nameplate rating. FLA is equal to the the transformer rated kVA divided by the square root of 3 times the phase to phase voltage in kV.
2. Fuse Minimum Melt fuse curves.
3. Minimum Melt current at 300 seconds divided by FLA, in percent.
4. Fuse data from Hubbell K-Link Minimum Melt Curves

Appendix B - Hubbell Power Systems K Fuse Catalog Cut Sheets

Fuse Links

Warranty - Material

Hubbell Power Systems, Inc. warrants all products sold by it to be merchantable (as such term is defined in the Uniform Commercial Code) and to be free from defects in material and workmanship. Buyer must notify the Company promptly of any claim under this warranty. The Buyer's exclusive remedy for breach of this warranty shall be the repair or replacement, F.O.B. factory, at the Company's option, of any product defective under the warranty which is returned to the Company within one year from the date of shipment. NO OTHER WARRANTY, WHETHER EXPRESS OR ARISING BY OPERATION OF LAW, COURSE OF DEALING, USAGE OF TRADE OR OTHERWISE IMPLIED, SHALL EXIST IN CONNECTION WITH THE COMPANY'S PRODUCTS OR ANY SALE OR USE THEREOF. The Company shall in no event be liable for any loss of profits or any consequential or special damages incurred by Buyer. The Company's warranty shall run only to the first Buyer of a product from the Company, from the Company's distributor, or from an original equipment manufacturer reselling the Company's product, and is non-assignable and non-transferable and shall be of no force and effect if asserted by any person other than such first Buyer. This warranty applies only to the use of the product as intended by Seller and does not cover any misapplication or misuse of said product.

Warranty - Application

Hubbell Power Systems, Inc. does not warrant the accuracy of and results from product or system performance recommendations resulting from any engineering analysis or study. This applies regardless of whether a charge is made for the recommendation, or if it is provided free of charge.

Responsibility for selection of the proper product or application rests solely with the purchaser. In the event of errors or inaccuracies determined to be caused by Hubbell Power Systems, Inc., its liability will be limited to the re-performance of any such analysis or study.

⚠ WARNING

These fuse links will not protect personnel from electrocution. Hot gases and high velocity particles are expelled during interruption. This expulsion can cause serious injury. Do not get in line with fuseholder. Stay away from conical space below fuseholder.

CAUTION: The equipment covered in this catalog section should be installed, used, and serviced only by competent personnel familiar with and following good work and safety practices. This equipment is for use by such personnel and is not intended as a substitute for adequate training and experience in safe procedures for this type of equipment.

This catalog information and any related instruction sheets do not cover all details or situations in equipment use nor do they provide for every possible contingency to be encountered in relation to installation, operation or maintenance. Should additional information and details be desired, or if specific situations arise which are not covered adequately for the user's purpose, the specifics should be referred to Hubbell Power Systems, Inc.

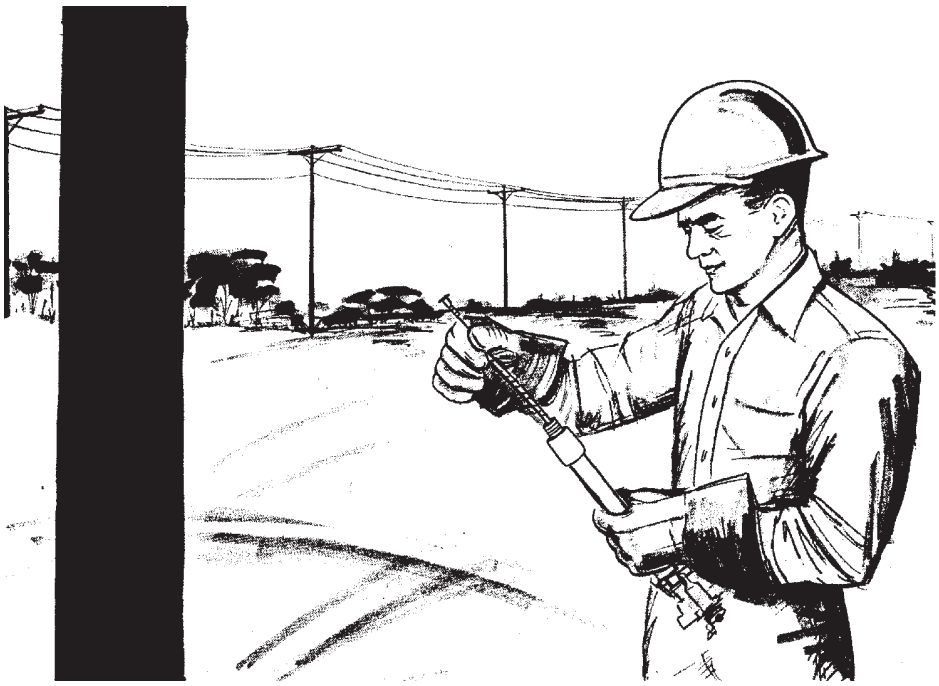

NOTE: Because Hubbell has a policy of continuous product improvement, we reserve the right to change design and specifications without notice.

©Copyright 2008 Hubbell • 210 North Allen Street • Centralia, MO 65240-1395 USA

Fuse Links

■ TYPE K ■ TYPE T
■ TYPE MS ■ SLOFAST

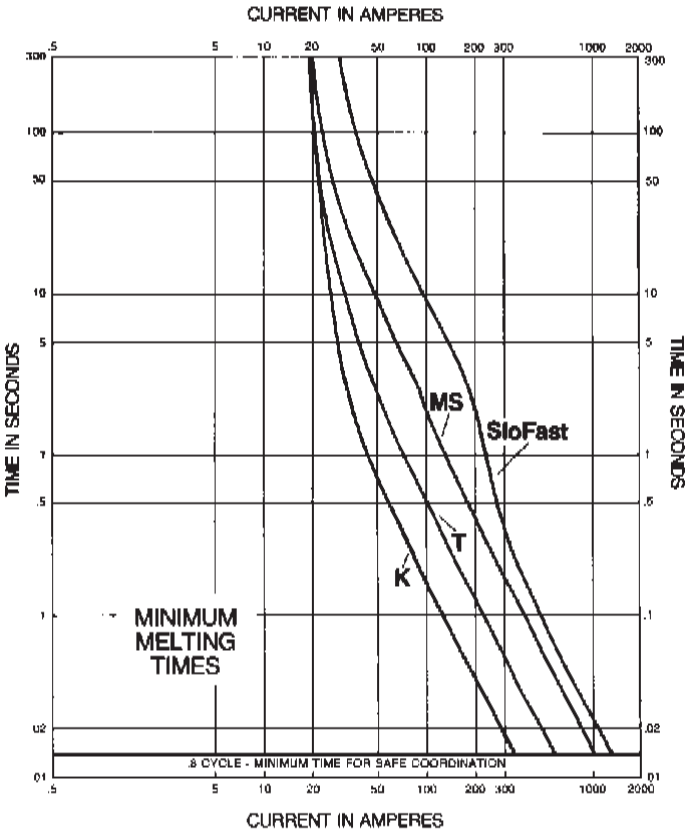

RELATIVE SPEEDS OF CHANCE FUSE LINKS

Format: 10 Ampere Links (10.4 amp. SloFast)

- **Meet all applicable ANSI/NEMA standards**

Chance Type K and Type T fuse links are made in complete accordance with ANSI/NEMA standards. Other Chance links meet all the standards except those covering time-current characteristics. Time-current characteristics for links other than K and T links are not covered in the ANSI standards.

- **Precision — The standard of Chance fuse links**

Chance fuse links assure system protection because they are precision manufactured. The fusible materials used in Chance Fuse Links are under continual control during manufacture. Pre-tested to guarantee their electrical values, these materials are held to precise tolerances. At critical points during the manufacturing process, rigid inspections are made.

Packaging

Chance fuse links come in protective plastic bags with perforations to facilitate quick, easy opening even when lineman's gloves are worn. Each bag remains completely sealed for all-weather protection and keeps the links protected in the line truck's bins.

Type and amperage is printed on each bag, for easy identification.

Type K fuse links

Application

The fast characteristics of Type K fuse links were established by ANSI/NEMA to provide fuse links that would meet existing coordination schemes.

Chance Type fuse links are designed to carry 150% of their rated current without damage to the fuse link itself or the cutout in which it is installed. This capacity is for special loading situations, such as short-time overloads and cold load pick-up.

Materials used

The fusible section of the 1 through 3 ampere Type K links consist of a stainless-steel fuse strain wire; the 6 through 10 ampere, stainless-steel strain wire and a copper-alloy fuse wire; 12 through 100 amperes, a stainless steel strain wire and a silver-copper fuse wire; 140 and 200 ampere, a silver-copper fuse wire large enough to serve as both strain and fuse wire.

Buttonheads and lengths

Conforming to all applicable ANSI/NEMA specifications, Chance Type K links are available with a removable or solid buttonhead.

Note: Catalog Numbers shown are 23" overall length; also available in 26" length.
For 26": *Solid head K or T links, change the last two digits from 23 to 26.
†Removable head K or T links, drop the last two digits.

Amps	Catalog Number	
	*Solid head	†Removable head
1	M1K23	M1KA23
2	M2K23	M2KA23
3	M3K23	M3KA23
6	M6K23	M6KA23
8	M8K23	M8KA23
10	M10K23	M10KA23
12	M12K23	M12KA23
15	M15K23	M15KA23
20	M20K23	M20KA23
25	M25K23	M25KA23
30	M30K23	M30KA23
40	M40K23	M40KA23
50	M50K23	M50KA23
65	M65K23	M65KA23
80	M80K23	M80KA23
100	M100K23	M100KA23
140	M140K23	M140KA23
200	M200K23	M200KA23

Twin Pigtail Type K and T fuse links

The twin pigtail fuse link is convenient to work with and easier to install in the cutout than conventional single pigtail fuse links. The pigtails attach under the clamp with one on each side of the attachment stud.
*†Catalog Numbers shown are 23" in overall length; for 26", see Note above.

Twin Pigtail fuse links

Type	Amps	*Solid head	†Removable head
K	200	M200K23T	M200KA23T
T	200	M200T23T	M200TA23T
K	140	M140K23T	M140KA23T
T	140	M140T23T	M140TA23T

Type T fuse links

Application

Chance Type T fuse links provide slower time-current characteristics than the Type K links. Type T links coordinate particularly well with automatic oil-circuit reclosers.

Chance Type T links are designed to carry 150% of their rated current without damage to the fuse link itself or the cutout in which it is installed. This capacity is for special loading situations, such as, short-time overloads, and cold-load pick-up.

Fuse elements

1 through 3 ampere Type T fuse links employ a fusing section consisting of a stainless-steel wire serving as both strain and fuse wire; 6 through 100 ampere, a stainless-steel strain wire and a pure-tin fuse wire in parallel. 140 and 200 ampere T links have a copper element mechanically crimped at one end, soldered at the other end. On overloads or low faults, the solder becomes a fluid and the link separates; on higher fault currents, the link separates when the copper wire melts.

Buttonheads and lengths

Chance Type T fuse links meet all applicable ANSI/NEMA specifications. They are available with a removable or solid buttonhead.

*†Catalog Numbers shown are 23" in overall length; for 26", see Note above.

Amps	Catalog Number	
	*Solid head	†Removable head
1	M1T23	M1TA23
2	M2T23	M2TA23
3	M3T23	M3TA23
6	M6T23	M6TA23
8	M8T23	M8TA23
10	M10T23	M10TA23
12	M12T23	M12TA23
15	M15T23	M15TA23
20	M20T23	M20TA23
25	M25T23	M25TA23
30	M30T23	M30TA23
40	M40T23	M40TA23
50	M50T23	M50TA23
65	M65T23	M65TA23
80	M80T23	M80TA23
100	M100T23	M100TA23
140	M140T23	M140TA23
200	M200T23	M200TA23

Type MS fuse links (Equivalent to Kearney Type KS)

Application data

Chance Type MS fuse links have very slow time-current characteristics. In applications where ANSI/NEMA Type T fuse link characteristics are too-fast, the slower characteristics of Type MS can often be utilized.

Fuse-section operation

The fuse element of Chance Type MS fuse links is composed of two copper or copper-alloy wires joined by a solder junction. During heavy overloads or low fault currents, the heat generated by the two wires melts the solder, causing fuse operation. Operation under medium or heavy fault current occurs as one of the two wires melt.

Buttonhead and lengths

The Type MS link is available with only a removable buttonhead.

‡**Note:** Catalog Numbers shown are 23" overall length; also available in 26" length.
†For 26", drop the last two digits.

Amps	‡Catalog Number
	Removable head
3	M3MSA23
5	M5MSA23
7	M7MSA23
10	M10MSA23
15	M15MSA23
20	M20MSA23
25	M25MSA23
30	M30MSA23
40	M40MSA23
50	M50MSA23
65	M65MSA23
80	M80MSA23
100	M100MSA23
125	M125MSA23
150	M150MSA23
200	M200MSA23

SloFast fuse links

Transformer protection

Secondary temporary faults that can be withstood by a transformer will not rupture a SloFast fuse link. If secondary faults persist and become dangerous, the SloFast link will operate, preventing damage to the transformer.

System protection

When a heavy fault occurs within the transformer primary bushings, a SloFast link clears the transformer from the system before damage can occur, and before any other protective device can operate and cause an unnecessary interruption to any other segment of the system.

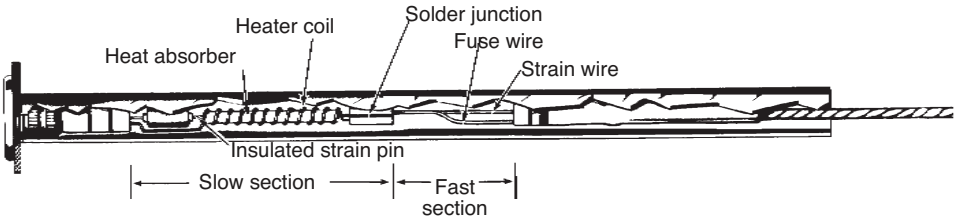

Construction and theory of operation

The inner construction of the SloFast Fuse Link is illustrated in the cut-away view above. There are two distinct current-responsive elements: one slow, one fast.

The slow curent-responsive element is made up of a number of components. The heater coil and the soldered junction are the two primary components. The insulated strain pin serves to carry the tension exerted when the fuse link is installed in a fuse cutout, and as a heat conductor to the soldered junction. The ceramic tube serves as a heat absorber.

The slow current-responsive element functions in the following manner: The heater coil generates heat at a rate which is proportional to the square of the current. This heat is absorbed by the ceramic material and transmitted to the soldered junction via the metallic strain pin. When a certain value of current flows for a specific length of time, sufficient heat is generated and transmitted to the soldered junction to cause melting of the solder, and the separation of the fuse link, and the interruption of the circuit. The time-current curve of the slow current-responsive element is that portion above the "knee" (4 seconds to 5 minutes on the time axis) in the graph below.

The fast current-responsive element is constructed like the single element in a conventional fuse link. Operation of the fuse link in time periods of less than 4 seconds is conventional. The time-current curve of the fast current-responsive element is that portion below the "knee" in the time-current graph below.

Application data

A comparison of the time-current curves of the Chance SloFast fuse link with those of conventional fuse links and the safe-loading time current characteristics for distribution transformers illustrates the application potential of the SloFast fuse links.

The rather unusual current rating assigned to SloFast fuse links is an aid in their application since the current rating assigned is identical to the continuous current rating of the transformers which they were specifically designed to protect.

If the SloFast link is used in place of ordinary links, the full overload capacity of the transformer is made available, but at the same time the transformer is protected from faults and overloads which could either destroy or shorten its life expectancy. SloFast is the perfect match for transformer protection. **Note:** For application of SloFast links for transformers, see Bulletin 10-8010.

Amps	†Catalog Number	
	Solid head	Removable head
0.4	M0D4SF23	M0D4SFA23
0.6	M0D6SF23	M0D6SFA23
0.7	M0D7SF23	M0D7SFA23
1.0	M1D0SF23	M1D0SFA23
1.3	M1D3SF23	M1D3SFA23
1.4	M1D4SF23	M1D4SFA23
1.6	M1D6SF23	M1D6SFA23
2.1	M2D1SF23	M2D1SFA23
3.1	M3D1SF23	M3D1SFA23
3.5	M3D5SF23	M3D5SFA23
4.2	M4D2SF23	M4D2SFA23
5.2	M5D2SF23	M5D2SFA23
6.3	M6D3SF23	M6.3SFA23
7.0	M7D0SF23	M7D0SFA23
7.8	M7D8SF23	M7D8SFA23
10.4	M10D4SF23	M10D4SFA23
14	M14SF23	M14SFA23
21	M21SF23	M21SFA23
32	M32SF23	M32SFA23
46	M46SF23	M46SFA23

†**Note:** Catalog Numbers shown are 23" overall length; also available in 26" length. For 26" links, drop the last two digits.

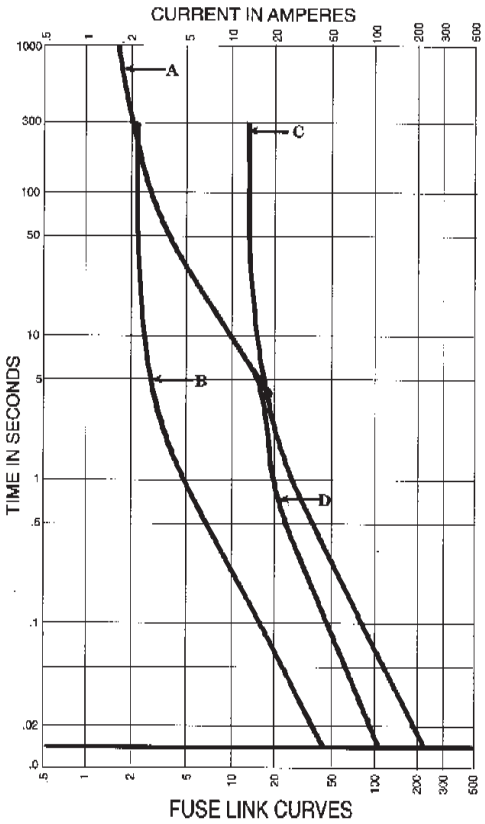

Curve A Safe Loading Curve for 5kVA 7200 V. Transformer
Curve B Average Melting Curve for NEMA 1 Amp. K
Curve C Average Melting Curve for NEMA 6 Amp. K
Curve D Average Melting Curve for .7 Amp. SloFast Fuse Link

Appendix C - Minimum Melt TCCs for “K” fuse links

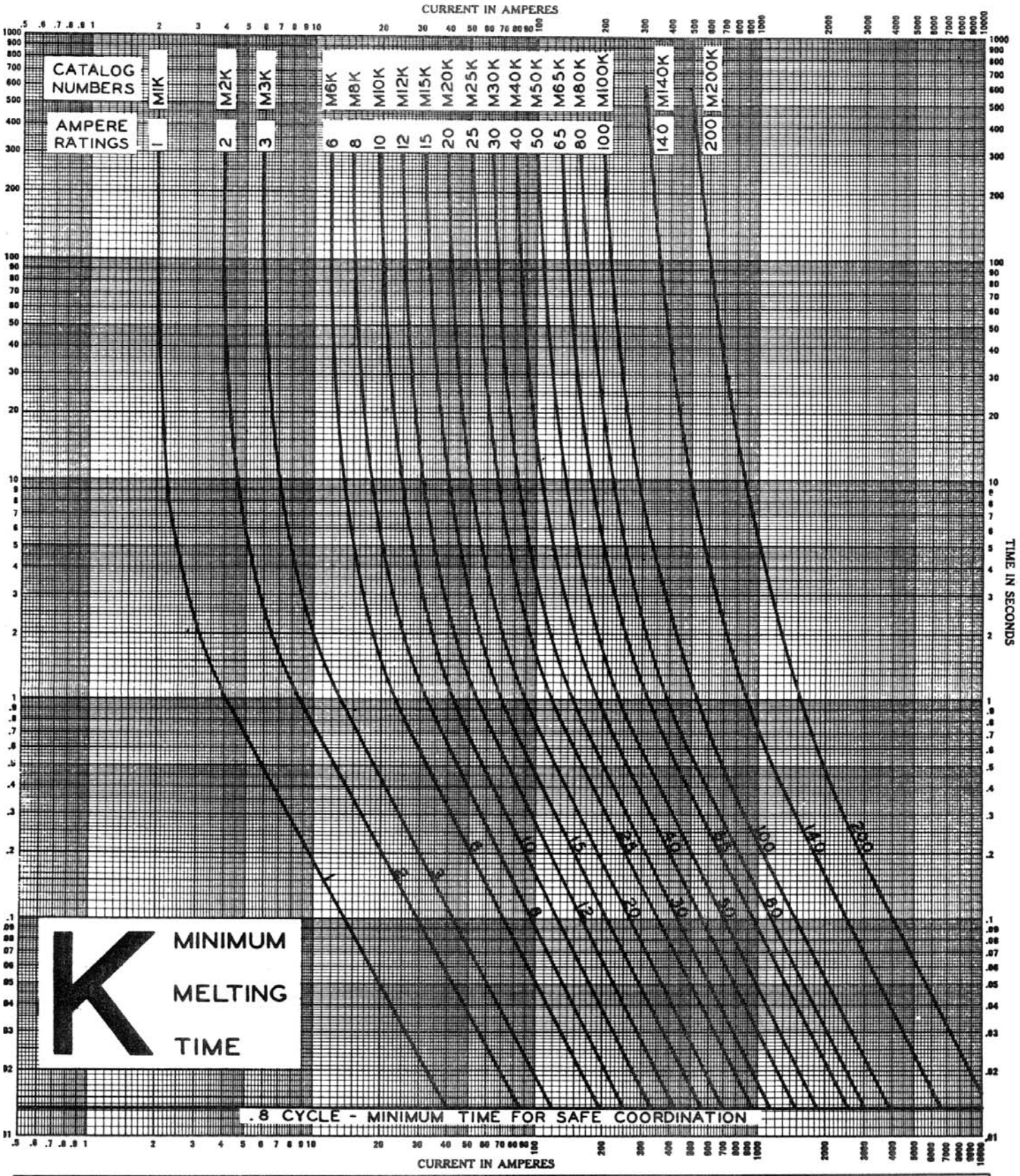

MINIMUM MELTING Time-Current Characteristic Curves
For: CHANCE TYPE "K" (FAST) Fuse Links In Chance Cutouts
Basis for data: ANSI/IEEE Standard C37.41 - 1988

1. Tests made at less than rated cutout voltage starting at 25C with no initial load.
2. Curves are plotted to minimum test points so variations should be plus.

30002

HUBBELL® CHANCE®

Centralia, MO Rev. A. 3/95

Appendix D - Total Clearing Time TCCs for “K” fuse links

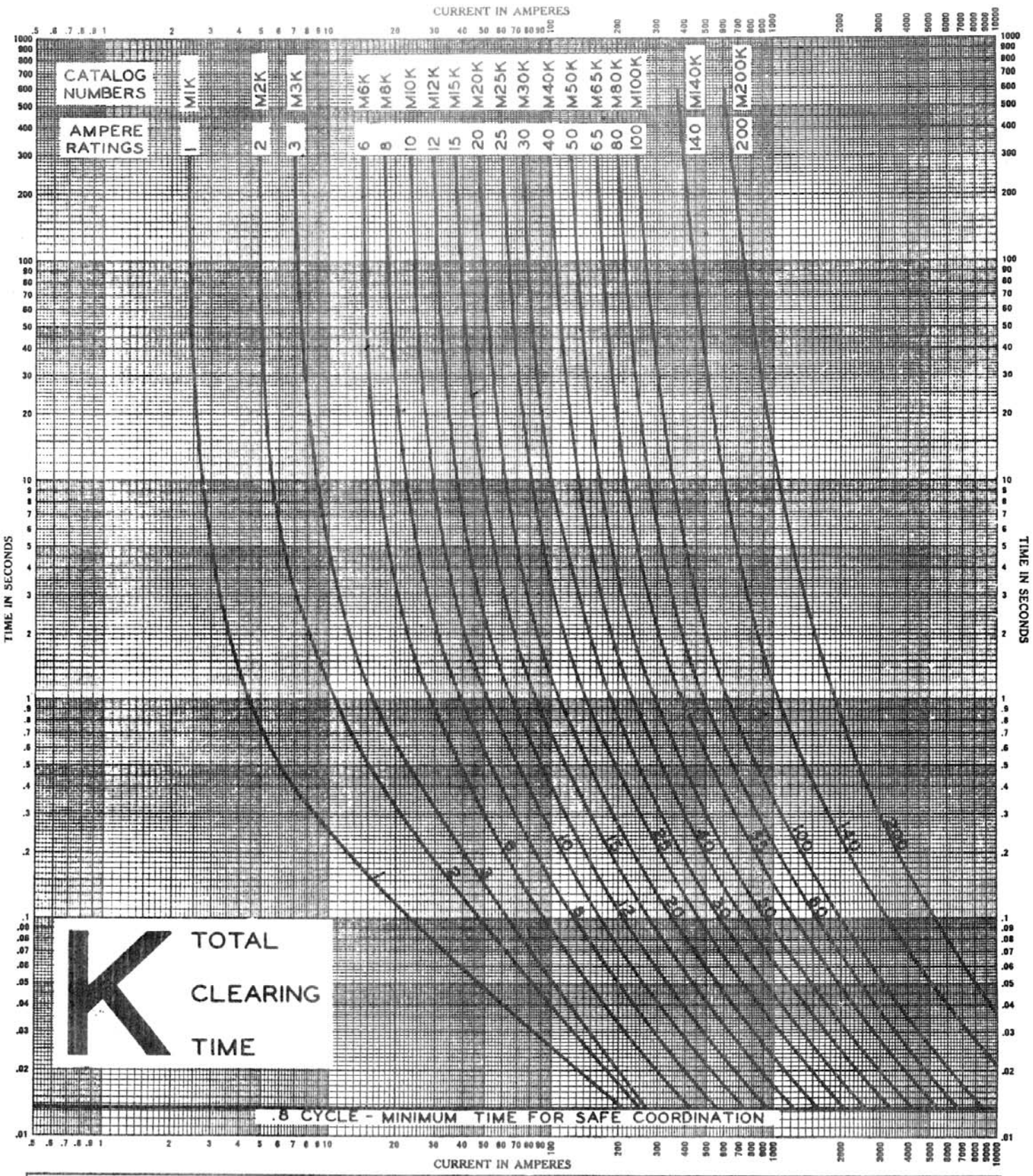

TOTAL CLEARING Time-Current Characteristic Curves
For: CHANCE TYPE "K" (FAST) Fuse Links In Chance Cutouts
Basis for data: ANSI/IEEE Standard C37.41 - 1988
1. Tests made at rated cutout voltage starting at 25C with no initial load.
2. Curves are plotted to maximum test points so variations should be minus.

30003

HUBBELL® CHANCE®

Centralia, MO Rev. A. 3/95

AFGHANISTAN ENGINEERING SUPPORT PROGRAM

WO-LT-0059A1T3
NEPS DISTRIBUTION MATERIALS AND INSTALLATION SPECIFICATION DEVELOPMENT

Amendment 1, Task 3, MV PROTECTION EQUIPMENT SPECIFICATIONS REPORT

September 10, 2013

DISCLAIMER

The author's views expressed in this publication do not necessarily reflect the views of the United States Agency for International Development or the United States Government.

Contents

1.0 MV Protection Equipment Specifications Report Scope 1
1.1 Task Description 1
2.0 Technical Requirements 1
2.1 General 1
2.1.1 References 1
2.1.2 Environmental Conditions 2
2.1.3 Submittals 2
2.1.4 Quality Assurance 2
2.2 Products 2
2.2.1 Surge Arresters 2
2.2.2 Distribution Class Fuse and Disconnecting Cutouts 3
2.3 Execution 4
2.3.1 Installation 4

Appendices

Appendix A – Technical Data Sheets – 15 kV and 20 kV Surge Arresters……..…6

Appendix B – Technical Data Sheet – Fuse Cutouts and Fuse Links……..….7

1.0 MV Protection Equipment Specifications Report Scope

1.1 Task Description

As Tetra Tech (Tt) is proceeding with the WO-LT-0059 Relay Coordination Study, deficiencies in the medium voltage (MV) system have been identified resulting from a lack of materials including MV distribution fuses and fuse links. Amendment No. 1, Task 3 for WO-LT-0059 was given NTP on July 27, 2013 by USAID to address these deficiencies by providing technical services to specify materials and support procurement, training for installation of the materials, and guidance relating to proper installation and maintenance of the specified materials.

This document provides technical specifications to support procurement of selected MV fuses and arresters. This report is prepared to satisfy the requirements of Task 3 of Amendment No. 1 to Work Order WO-LT-0059.

2.0 Technical Requirements

2.1 General

2.1.1 References

The publications listed below form a part of this specification to the extent referenced. The publications are referred to in the text by the basic designation only.

IEC 60071-1	Insulation Co-ordination – Part 1: Definitions, Principles and Rules
IEC 60071-2	Insulation Co-ordination – Part 2: Application Guide
IEC 60099-4	Metal Oxide Surge Arresters without Gaps for A.C.
IEC 60282-2	High Voltage Fuses – Part 2: Expulsion Fuses
IEEE C37.40	IEEE Standard Service Conditions and Definitions for High-Voltage Fuses, Distribution Enclosed Single-Pole Air Switches, Fuse Disconnecting Switches, and Accessories
IEEE C37.41	IEEE Standard Design Tests for High-Voltage (> 1000 V) Fuses, Fuse and Disconnecting Cutouts, Distribution Enclosed Single-Pole Air Switches, Fuse Disconnecting Switches, and Fuse Links and Accessories Used with These Devices
IEEE C37.42	Standard Specifications for High-Voltage (> 1000 V) Expulsion Type Distribution-Class Fuses, Fuse and Disconnecting Cutouts, Fuse Disconnecting Switches, and Fuse Links, and Accessories Used with These Devices
IEEE C62.11	IEEE Standard for Metal-Oxide Surge Arresters for AC Power Circuits (> 1 kV)

2.1.2 Environmental Conditions

The equipment specified herein will be installed in the vicinity of Kabul, Afghanistan. Elevation may be as high as 2000 m and maximum ambient temperatures may be as high as 40 C.

2.1.3 Submittals

The following shall be submitted for review and approval as indicated.

Product Data

- Surge Arresters
- Fuse Cutouts
- Fuse Links

2.1.4 Quality Assurance

2.1.4.1 Standard Products

Provide materials and equipment that are products of manufacturers regularly engaged in the production of such products which are of equal material, design and workmanship. Provide products that have been in satisfactory commercial or industrial use for 2 years prior to bid opening. The 2-year period includes applications of equipment and materials under similar circumstances and of similar size. Provide a product that has been on sale on the commercial market through advertisements, manufacturers' catalogs, or brochures during the 2-year period. Where two or more items of the same class of equipment are required, provide items that are products of a single manufacturer; however, the component parts of the item need not be the products of the same manufacturer unless stated in this section.

2.2 Products

2.2.1 Surge Arresters

2.2.1.1 General

Surge arresters for outdoor use shall be furnished in accordance with this section. The surge arresters shall be in compliance with applicable IEEE standards.

The surge arresters shall be metal-oxide gapless with a polymer housing and shall include a ground lead disconnector. Surge arresters will be applied in an outdoor environment.

Arresters shall meet to exceed the requirements to be classified as Distribution Heavy Duty and shall be provided in accordance with the table below and as indicated in Appendix A - Technical Data Sheets -15kV and 20 kV Surge Arresters.

Nominal System Voltage	**20kV**	**15 kV**
Maximum System Voltage	22 kV	16.5 kV
MCOV (Maximum Continuous Operating Voltage)	22kV	15.3 kV
Arrester Insulation Withstand	In conformance with IEEE C62.11	In conformance with IEEE C62.11
Rated Frequency	50Hz	50Hz
Creepage Distance (Minimum)	20 mm/ kV or greater with voltage being the 22kV maximum system phase to phase voltage.	20 mm/ kV or greater with voltage being the 16.5 kV maximum system phase to phase voltage.

Surge arresters shall be provided with a standard cross-arm mounting bracket, and terminations consisting of a nut and wire clamp capable of accepting a range of conductors including at least 4.1 mm diameter (#6 AWG solid copper) through 7.2 mm diameter (#2 AWG stranded) conductors.

2.2.2 Distribution Class Fuse and Disconnecting Cutouts

2.2.2.1 General

This equipment shall meet applicable IEEE and IEC specifications.

Single-phase fused cutouts are an integral part of the switching and protection of the distribution transformers. The fused cutout shall have a field replaceable fuse element, rated for outdoor use, and meet the minimum requirements in this specification. The porcelain shall have a solid core and one piece porcelain frame.

The fuse-holder shall be constructed of an epoxy impregnated glass filament wound tube utilizing synthetic arc quenching materials. A large bronze cast pull ring should be utilized for ease of installation and re-fusing. The bronze trunnion, with lifting ring having both front and side accessibility, should have minimum contact resistance. The lower contact assembly should minimize contact resistance. The fuse holder should be interchangeable with similarly rated products of other manufacturers. Fuse and disconnecting cutouts will be applied in an outdoor environment.

When the fuse melts due to over-current conditions, the fuse tube will open and rotate clear of the current path effectively opening the circuit.

2.2.2.2 Fused Cutout Body, Mounting and Fuse Tubes

The fused cutout shall include all necessary mounting brackets, insulators, fuse tubes, end fittings and hardware. Mounting brackets shall be designed for mounting on a cross-arm and have an extended length bracket to provide additional clearance and flexibility in mounting the fused cutout. Terminations shall be parallel groove clamps capable of accepting a range of conductors from at least 4.11 mm (#6 AWG solid copper) to 11.35 mm (1/0 ACSR) in diameter. The fused cutout shall be provided with hooks compatible industry standard load break tools. Fuse tubes shall be compatible with Type K Universal Fuse

Links rated up to 100 Amperes. Fuse tubes shall be single expulsion type. The use of arc shortening rods is permitted.

2.2.2.3 Replaceable Fuse Links

Universal Type K Fuse Links shall be provided. The fuse element shall be field replaceable, solderless construction, corrosion resistant, and have brazed terminals. The melting time-current characteristics shall be precise with only 10% total tolerance in melting current. Age, vibration, nor surges that heat the element close to the melting threshold will affect the time-current characteristics of the fuse element.

Fuse links shall be provided in accordance with the table below and as indicated in Appendix B - Technical Data Sheet - Fuse Cutouts and Fuse Links.

Nominal System Voltages	**20 kV and 15 kV**
Maximum System Voltages	22 kV and 16.5 kV
Rated Maximum Voltage	24 kV
Minimum Rated Lightning Impulse Withstand (Basic Impulse Level)	150 kV
Rated Frequency	50Hz
Rated Maximum Current	100 A
Creepage Distance	20 mm/ kV or greater with voltage being the 22kV maximum system phase to phase voltage.
Interrupting Capacity	8,000 A Symmetrical

2.3 Execution

2.3.1 Installation

Install of all equipment shall be in accordance with the manufacturer's instructions. Include the installation all necessary hardware, insulators, and connections of all material.

All electrical connections shall be made with manufactures recommendation of anti-corrosion inhibitor and all bolts and electrical connections shall have the correct torque applied to the connections.

Appendices

Appendix A – Technical Data Sheets – 15kV and 20kV Surge Arresters

Technical Data for 15 kV Surge Arrester

Designation	Unit	Required	Offered
Country of origin		To be specified	
Manufacturer	-	To be specified	
Country of origin	-	To be specified	
Type	-	Metal oxide gapless	
Housing		Polymer	
Color	-	grey	
Nominal Characteristics			
Rated maximum network operating voltage	kV	16.5	
Rated operating voltage	kV	15	
Rated maximum continuous operating voltage (MCOV)	kV	15.3	
Rated discharge current (peak)	kA	10	
Switching impulse current (peak)	kA	To be specified	
Rated frequency	Hz	50	
Protection Characteristics			
Maximum residual voltages			
- For a steep impulse current, ½ µs front, 10 kA.	kV	To be specified	
- For lightning impulse current, 8/20 µs, 10 kA.	kV	To be specified	
- For a switching impulse current 30/60 µs, 0.5 kA	kV	To be specified	
Energy absorbing capacity	kJ/kV	To be specified	
Operating Performance			
Temporary over voltage (TOV) with no prior duty curve		To be specified	
Insulation Levels and Strength			
- Lighting impulse withstand voltage	kVp	In conformance with IEEE C62.11	
- Power frequency withstand voltage (1 min. wet)	kV	In conformance with IEEE C62.11	
- Creepage distance	mm/kV	20	
- Cantilever strength	kN	To be specified	
- Torsion strength	N-m	To be specified	
Weights and Dimensions:			
- Arrester height	mm	To be specified	
- Arrester diameter	mm	To be specified	
- Weight	kg	To be specified	
Accessories			
Mounting hardware	-	As specified	
Ground/Earth Disconnector	-	As specified	
Insulating base with Disconnector	-	As specified	
HV terminals connectors	-	As specified	
Standards	-		
		IEEE C62.11	

Technical Data for 20kV Surge Arrester

Designation	Unit	Required	Offered
Country of origin		To be specified	
Manufacturer	-	To be specified	
Country of origin	-	To be specified	
Type	-	Metal oxide gapless	
Housing		Polymer	
Color	-	grey	
Nominal Characteristics			
Rated maximum network operating voltage	kV	22	
Rated operating voltage	kV	20	
Rated maximum continuous operating voltage (MCOV)	kV	22	
Rated discharge current (peak)	kA	10	
Switching impulse current (peak)	kA	To be specified	
Rated frequency	Hz	50	
Protection Characteristics			
Maximum residual voltages			
- For a steep impulse current, ½ µs front, 10 kA.	kV	To be specified	
- For lightning impulse current, 8/20 µs, 10 kA.	kV	To be specified	
- For a switching impulse current 30/60 µs, 0.5 kA	kV	To be specified	
Energy absorbing capacity	kJ/kV	To be specified	
Operating Performance			
Temporary over voltage (TOV) with no prior duty curve		To be specified	
Insulation Levels and Strength			
- Lighting impulse withstand voltage	kVp	In conformance with IEEE C62.11	
- Power frequency withstand voltage (1 min. wet)	kV	In conformance with IEEE C62.11	
- Creepage distance	mm/kV	20	
- Cantilever strength	kN	To be specified	
- Torsion strength	N-m	To be specified	
Weights and Dimensions:			
- Arrester height	mm	To be specified	
- Arrester diameter	mm	To be specified	
- Weight	kg	To be specified	
Accessories			
Mounting hardware	-	As specified	
Ground/Earth Disconnector	-	As specified	
Insulating base with Disconnector	-	As specified	
HV terminals connectors	-	As specified	
Standards	-		
		IEEE C62.11	

Appendix B – Technical Data Sheet – 15kV and 20kV Fuse Cutouts and Fuse Links

Technical Data 15kV and 20kV Fuse Cutouts and Fuse Links

Description	Unit	Required	Offered
Fuse Cutout			
Country of Origin		To be specified	
Manufacturer		To be specified	
Type		To be specified	
Maximum rated voltage	kV	24	
Rated Current	A	100	
Lightning impulse withstand (BIL)	kV	150	
Power frequency withstand	kV	To be specified	
Insulator		Porcelain	
Symmetrical interrupt current	kA	8	
Creepage distance	mm/kV	20	
Termination fittings, support brackets brackets, bolts, washers, buts		As specified	
Fuse holder interchangability (list other manufacturers)		To be specified	
Standards		IEEE C37.40, C37.41, C37.41 IEC 60282-2	
Fuse Link			
Manufacturer/Country		To be specified	
Type		Universal type K	
Standards		IEEE C37.42	

AFGHANISTAN ENGINEERING SUPPORT PROGRAM

WO-LT-0059A1T4
NEPS DISTRIBUTION MATERIALS AND INSTALLATION SPECIFICATION DEVELOPMENT

Amendment 1, Task 4, MV PROTECTION EQUIPMENT BILL OF QUANTITIES REPORT

September 10, 2013

DISCLAIMER

The author's views expressed in this publication do not necessarily reflect the views of the United States Agency for International Development or the United States Government.

Contents

1.0 MV Protection Equipment Bill of Quantities Scope 1
1.1 Task Description 1
2.0 Bill of Quantities 1
2.1 Recommended Hubbell Part Numbers 1
2.2 Spares 2
2.3 Special Tools 2
2.4 Single Line Diagrams 2
2.5 BOQs 2

Appendices

Appendix A – Single Line Diagrams 9

1.0 MV Protection Equipment Bill of Quantities Scope

1.1 Task Description

As Tetra Tech (Tt) is proceeding with the WO-LT-0059 Relay Coordination Study, deficiencies in the medium voltage (MV) system have been identified resulting from a lack of materials including MV distribution fuses and fuse links. Amendment No. 1, Task 4 for WO-LT-0059 was given NTP on July 27, 2013 by USAID to address these deficiencies by providing technical services to specify materials and support procurement, training for installation of the materials, and guidance relating to proper installation and maintenance of the specified materials.

This document provides a Bill of Quantities that may be applied to procurement of MV fuses, cutouts, and arresters for Kabul NW MV distribution feeders 515, 516, 525, 526, 527, JL-14, JL-16, JL-21, JL-22 and JL-12. This report is prepared to satisfy the requirements of Task 4 of Amendment No. 1 to Work Order WO-LT-0059.

2.0 Bill of Quantities

2.1 Recommended Hubbell Part Numbers

Recommended equipment part numbers for fuse links, cutouts, and surge arrestors manufactured and supplied by Hubbell Power Systems, Inc. are as follow. These items are considered typical, meeting the requirements of the project specifications. Alternate items and suppliers meeting the minimum technical requirements may be substituted at the discretion of the owner.

Fuse Links

Voltage Class (kV)	Rating (A)	Part Number
15/20	1	M1KA23
15/20	2	M2KA23
15/20	3	M3KA23
15/20	6	M6KA23
15/20	10	M8KA23
15/20	12	M10KA23
15/20	15	M12KA23
15/20	20	M15KA23
15/20	25	M20KA23
15/20	25	M25KA23
15/20	30	M30KA23
15/20	40	M40KA23
15/20	50	M50KA23
15/20	65	M65KA23
15/20	80	M80KA23

Cutouts

Voltage Class (kV)	Rating (BIL)	Part Number
15/20	150kV	C710313PX_

Surge Arrestors

Voltage Class (kV)	Rating (MCOV)	Part Number
15	15.3kV	2137157224
20	22kV	2137227224

2.2 Spares

While none of the components specified herein are considered long-lead, spares of all components should be warehoused at all times to minimize the duration of electrical outages due to faults and equipment failures. Purchase and warehousing of 10% excess of all components is recommended.

2.3 Special Tools

No special tools, beyond those already in service with the local utility are required to support installation, operation, or maintenance of the specified components.

2.4 Single Line Diagrams

Single line diagrams for Kabul NW MV distribution feeders 515, 516, 525, 526, 527, JL-14, JL-16, JL-21, JL-22 and JL-12 are included in Appendix A for reference.

2.5 BOQs

Feeder 515

	Cutout	Arrester	Fuse Link					
			Hubbell K Link Rating (A) / Part Number					
Rating	150 kV BIL	15.3kV MCOV	1	2	3	6	8	10
Hubbell Part Number	C710313PX_	2137157224	M1KA23	M2KA23	M3KA23	M6KA23	M8KA23	M10KA23
Quantity Required	114	114	3	-	-	9	12	3
Spares	10	10	1	-	-	1	1	1

Fuse Link									
Hubbell K Link Rating (A) / Part Number									
Rating	12	15	20	25	30	40	50	65	80
Hubbell Part Number	M12KA23	M15KA23	M20KA23	M25KA23	M30KA23	M40KA23	M50KA23	M65KA23	M80KA23
Quantity Required	-	39	21	-	-	24	3	-	-
Spares	-	4	2	-	-	2	1	-	-

Feeder 516

	Cutout	Arrester	Fuse Link					
			Hubbell K Link Rating (A) / Part Number					
Rating	150 kV BIL	15.3kV MCOV	1	2	3	6	8	10
Hubbell Part Number	C710313PX_	2137157224	M1KA23	M2KA23	M3KA23	M6KA23	M8KA23	M10KA23
Quantity Required	18	18	-	-	-	-	-	-
Spares	2	2	-	-	-	-	-	-

Fuse Link									
Hubbell K Link Rating (A) / Part Number									
Rating	12	15	20	25	30	40	50	65	80
Hubbell Part Number	M12KA23	M15KA23	M20KA23	M25KA23	M30KA23	M40KA23	M50KA23	M65KA23	M80KA23
Quantity Required	-	-	3	-	-	12	3	-	-
Spares	-	-	1	-	-	1	1	-	-

Feeder 525

	Cutout	Arrester	Fuse Link					
			Hubbell K Link Rating (A) / Part Number					
Rating	150 kV BIL	15.3kV MCOV	1	2	3	6	8	10
Hubbell Part Number	C710313PX_	2137157224	M1KA23	M2KA23	M3KA23	M6KA23	M8KA23	M10KA23
Quantity Required	63	63	-	3	-	-	-	-
Spares	6	6	-	1	-	-	-	-

Fuse Link									
Hubbell K Link Rating (A) / Part Number									
Rating	12	15	20	25	30	40	50	65	80
Hubbell Part Number	M12KA23	M15KA23	M20KA23	M25KA23	M30KA23	M40KA23	M50KA23	M65KA23	M80KA23
Quantity Required	-	21	12	-	-	21	6	-	-
Spares	-	2	1	-	-	2	1	-	-

Feeder 526

	Cutout	Arrester	Fuse Link					
			Hubbell K Link Rating (A) / Part Number					
Rating	150 kV BIL	15.3kV MCOV	1	2	3	6	8	10
Hubbell Part Number	C710313PX_	2137157224	M1KA23	M2KA23	M3KA23	M6KA23	M8KA23	M10KA23
Quantity Required	45	45	-	3	-	-	3	-
Spares	5	5	-	1	-	-	1	-

Fuse Link									
Hubbell K Link Rating (A) / Part Number									
Rating	12	15	20	25	30	40	50	65	80
Hubbell Part Number	M12KA23	M15KA23	M20KA23	M25KA23	M30KA23	M40KA23	M50KA23	M65KA23	M80KA23
Quantity Required	-	9	9	-	-	21	-	-	-
Spares	-	1	1	-	-	2	-	-	-

Feeder 527

	Cutout	Arrester	Fuse Link					
			Hubbell K Link Rating (A) / Part Number					
Rating	150 kV BIL	15.3kV MCOV	1	2	3	6	8	10
Hubbell Part Number	C710313PX_	2137157224	M1KA23	M2KA23	M3KA23	M6KA23	M8KA23	M10KA23
Quantity Required	63	63	-	3	3	6	-	-
Spares	6	6	-	1	1	1	-	-

Fuse Link									
Hubbell K Link Rating (A) / Part Number									
Rating	12	15	20	25	30	40	50	65	80
Hubbell Part Number	M12KA23	M15KA23	M20KA23	M25KA23	M30KA23	M40KA23	M50KA23	M65KA23	M80KA23
Quantity Required	-	6	15	-	-	30	-	-	-
Spares	-	1	2	-	-	3	-	-	-

Feeder JL-12

	Cutout	Arrester	Fuse Link					
			Hubbell K Link Rating (A) / Part Number					
Rating	150 kV BIL	15.3kV MCOV	1	2	3	6	8	10
Hubbell Part Number	C710313PX_	2137157224	M1KA23	M2KA23	M3KA23	M6KA23	M8KA23	M10KA23
Quantity Required	72	72	-	-	-	6	0	3
Spares	7	7	-	-	-	1	-	1

Fuse Link									
Hubbell K Link Rating (A) / Part Number									
Rating	12	15	20	25	30	40	50	65	80
Hubbell Part Number	M12KA23	M15KA23	M20KA23	M25KA23	M30KA23	M40KA23	M50KA23	M65KA23	M80KA23
Quantity Required	-	12	18	-	-	33	-	-	-
Spares	-	1	2	-	-	3	-	-	-

Feeder JL-14

	Cutout	Arrester	Fuse Link					
			Hubbell K Link Rating (A) / Part Number					
Rating	150 kV BIL	15.3kV MCOV	1	2	3	6	8	10
Hubbell Part Number	C710313PX_	2137157224	M1KA23	M2KA23	M3KA23	M6KA23	M8KA23	M10KA23
Quantity Required	72	72	-	-	-	6	-	3
Spares	7	7	-	-	-	1	-	1

Fuse Link									
Hubbell K Link Rating (A) / Part Number									
Rating	12	15	20	25	30	40	50	65	80
Hubbell Part Number	M12KA23	M15KA23	M20KA23	M25KA23	M30KA23	M40KA23	M50KA23	M65KA23	M80KA23
Quantity Required	-	12	18	-	-	33	-	-	-
Spares	-	1	2	-	-	3	-	-	-

Feeder JL-16

	Cutout	Arrester	Fuse Link					
			Hubbell K Link Rating (A) / Part Number					
Rating	150 kV BIL	15.3kV MCOV	1	2	3	6	8	10
Hubbell Part Number	C710313PX_	2137157224	M1KA23	M2KA23	M3KA23	M6KA23	M8KA23	M10KA23
Quantity Required	66	66	-	-	-	-	-	-
Spares	7	7	-	-	-	-	-	-

Fuse Link									
Hubbell K Link Rating (A) / Part Number									
Rating	12	15	20	25	30	40	50	65	80
Hubbell Part Number	M12KA23	M15KA23	M20KA23	M25KA23	M30KA23	M40KA23	M50KA23	M65KA23	M80KA23
Quantity Required	-	-	21	-	-	42	3	-	-
Spares	-	-	2	-	-	4	-	-	-

Feeder JL-21

	Cutout	Arrester	Fuse Link					
			Hubbell K Link Rating (A) / Part Number					
Rating	150 kV BIL	15.3kV MCOV	1	2	3	6	8	10
Hubbell Part Number	C710313PX_	2137157224	M1KA23	M2KA23	M3KA23	M6KA23	M8KA23	M10KA23
Quantity Required	138	138	-	-	-	6	-	15
Spares	14	14	-	-	-	1	-	2

Fuse Link									
Hubbell K Link Rating (A) / Part Number									
Rating	12	15	20	25	30	40	50	65	80
Hubbell Part Number	M12KA23	M15KA23	M20KA23	M25KA23	M30KA23	M40KA23	M50KA23	M65KA23	M80KA23
Quantity Required	-	18	60	-	-	36	3	-	-
Spares	-	2	6	-	-	4	1	-	-

Feeder JL-22

	Cutout	Arrester	Fuse Link					
			Hubbell K Link Rating (A) / Part Number					
Rating	150 kV BIL	15.3kV MCOV	1	2	3	6	8	10
Hubbell Part Number	C710313PX_	2137157224	M1KA23	M2KA23	M3KA23	M6KA23	M8KA23	M10KA23
Quantity Required	24	24	-	-	-	-	-	-
Spares	2	2	-	-	-	-	-	-

Fuse Link									
Hubbell K Link Rating (A) / Part Number									
Rating	12	15	20	25	30	40	50	65	80
Hubbell Part Number	M12KA23	M15KA23	M20KA23	M25KA23	M30KA23	M40KA23	M50KA23	M65KA23	M80KA23
Quantity Required	-	-	12	-	-	9	3	-	-
Spares	-	-	1	-	-	1	1	-	-

Appendices

Appendix A – Single Line Diagrams

LEGEND

TRANSFORMER

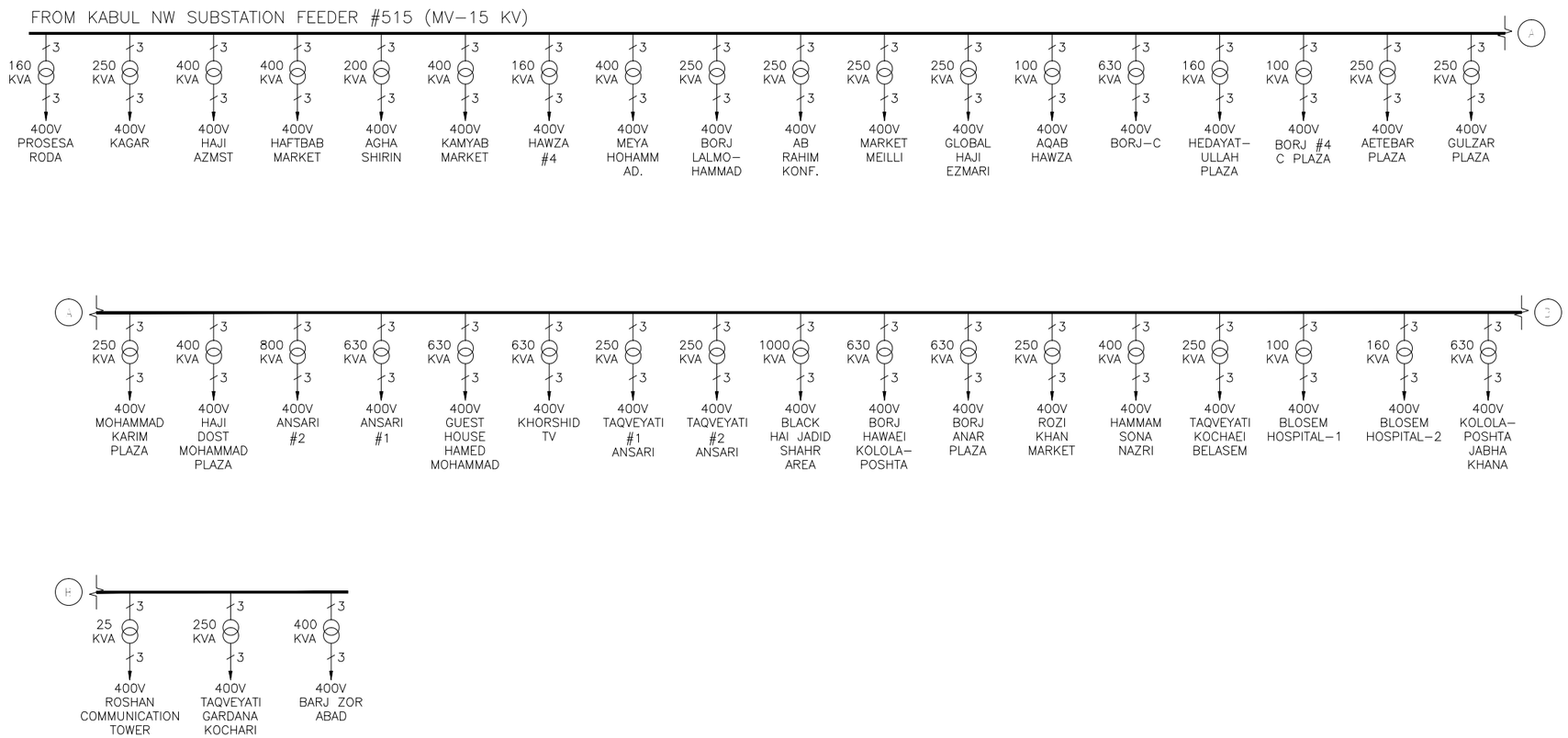

This project was made possible by the United States Agency for International Development and the generous support of the American People through USAID Global Architecture and Engineering IQC Contracts.

SYMB	DESCRIPTION	DATE	APR

DESIGNED BY: RM
DATE: 9/05/2013
DWN BY: KP
SUBMITTED BY: TETRA TECH
CHK BY: NF
FILE NO.: XE651DI

USAID FROM THE AMERICAN PEOPLE

AESP

WO–LT–0059A1
KABUL AREA DISTRIBUTION
W/ FEEDERS FROM NW KABUL SUBSTATION
TO DISTRIBUTION TRANSFORMERS
SINGLE LINE DIAGRAM
FEEDER #515

SHEET REFERENCE NUMBER:
XE–651DI

DRAFT 9/11/2013 9:15 AM

NOT FOR CONSTRUCTION

P:\Afghanistan\SEPS\XE651DI.dwg 9/11/2013 9:15:58 AM Kip Prentice 6436

LEGEND

TRANSFORMER

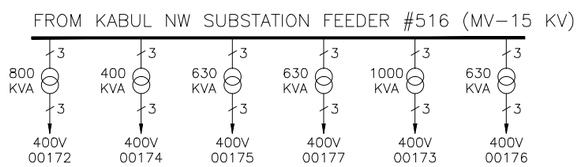

This project was made possible by the United States Agency for International Development and the generous support of the American People through USAID Global Architecture and Engineering IQC Contracts.

SYMB	DESCRIPTION	DATE	APR

DESIGNED BY: RM
DWN BY: KP
CHK BY: NF
DATE: 9/05/2013
SUBMITTED BY: TETRA TECH
FILE NO.: XE652DI

USAID FROM THE AMERICAN PEOPLE

A E S P

WO-LT-0059A1
KABUL AREA DISTRIBUTION
MV FEEDERS FROM NW KABUL SUBSTATION
TO DISTRIBUTION TRANSFORMERS
SINGLE LINE DIAGRAM
FEEDER #516

DRAFT 9/11/2013 9:16 AM

SHEET REFERENCE NUMBER:

XE-652DI

NOT FOR CONSTRUCTION

P:\Afghanistan\SEPS\XE652DI.dwg 9/11/2013 9:16:31 AM Kip Prentice 6436

LEGEND

TRANSFORMER

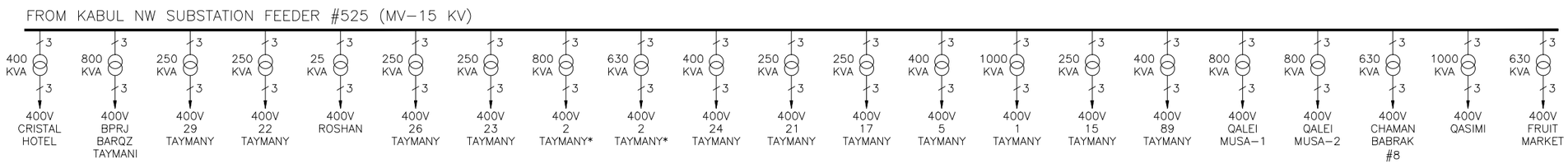

This project was made possible by the United States Agency for International Development and the generous support of the American People through USAID Global Architecture and Engineering IQC Contracts.

SYMB	DESCRIPTION	DATE	APR

DESIGNED BY: RM
DATE: 9/05/2013
DWN BY: KP
SUBMITTED BY: TETRA TECH
CHK BY: NF
FILE NO.: XE653DI

USAID FROM THE AMERICAN PEOPLE

A E S P

WO–LT–0059A1
KABUL AREA DISTRIBUTION
M/ FEEDERS FROM NW KABUL SUBSTATION
TO DISTRIBUTION LINES OVERLOADS
SINGLE LINE DIAGRAM
FEEDER #525

DRAFT 9/11/2013 9:17 AM

SHEET REFERENCE NUMBER:

XE–653DI

NOT FOR CONSTRUCTION

P:\Afghanistan\SEPS\XE653DI.dwg 9/11/2013 9:17:02 AM Kip Prentice 6436

LEGEND

TRANSFORMER

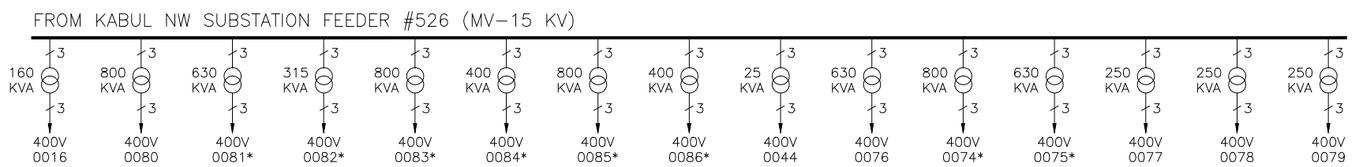

NOT FOR CONSTRUCTION

DRAFT 9/11/2013 9:17 AM

This project was made possible by the United States Agency for International Development and the generous support of the American People through USAID Global Architecture and Engineering IQC Contracts.

SYMB	DESCRIPTION	DATE	APR

DESIGNED BY: RM
DWN BY: KP
CHK BY: NF
DATE: 9/05/2013
SUBMITTED BY: TETRA TECH
FILE NO.: XE654DI

USAID FROM THE AMERICAN PEOPLE

A E S P

WO-LT-0059A1
KABUL AREA DISTRIBUTION
W/ FEEDERS FROM NW KABUL SUBSTATION
TO DISTRICT TRANSFORMERS
SINGLE LINE DIAGRAM
FEEDER #526

SHEET REFERENCE NUMBER:
XE-654DI

P:\Afghanistan\SEPS\XE654DI.dwg 9/11/2013 9:17:34 AM Kip Prentice 6436

LEGEND

TRANSFORMER

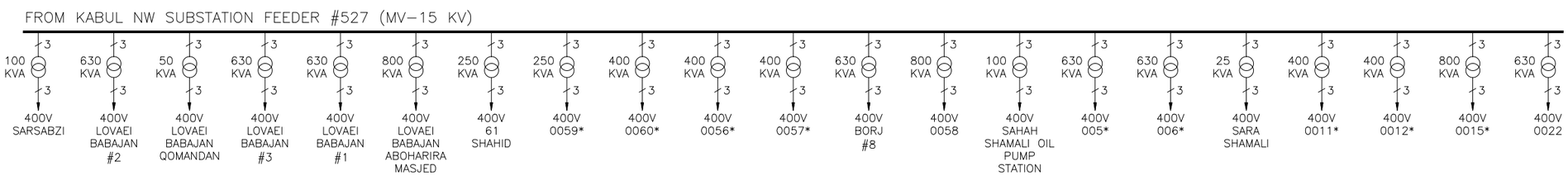

This project was made possible by the United States Agency for International Development and the generous support of the American People through USAID Global Architecture and Engineering IQC Contracts.

SYMB	DESCRIPTION	DATE	APR

DESIGNED BY: RM
DATE: 9/05/2013
DWN BY: KP
SUBMITTED BY: TETRA TECH
CHK BY: NF
FILE NO.: XE655DI

USAID FROM THE AMERICAN PEOPLE

AESP

WO-LT-0059A1
KABUL AREA DISTRIBUTION
M/ FEEDERS FROM NW KABUL SUBSTATION
TO DISTRIBUTION LINES OHNLS
SINGLE LINE DIAGRAM
FEEDER #527

DRAFT 9/11/2013 9:19 AM

SHEET REFERENCE NUMBER:
XE-655DI

NOT FOR CONSTRUCTION

P:\Afghanistan\SEPS\XE655DI.dwg 9/11/2013 9:19:45 AM Kip Prentice 6436

LEGEND

TRANSFORMER

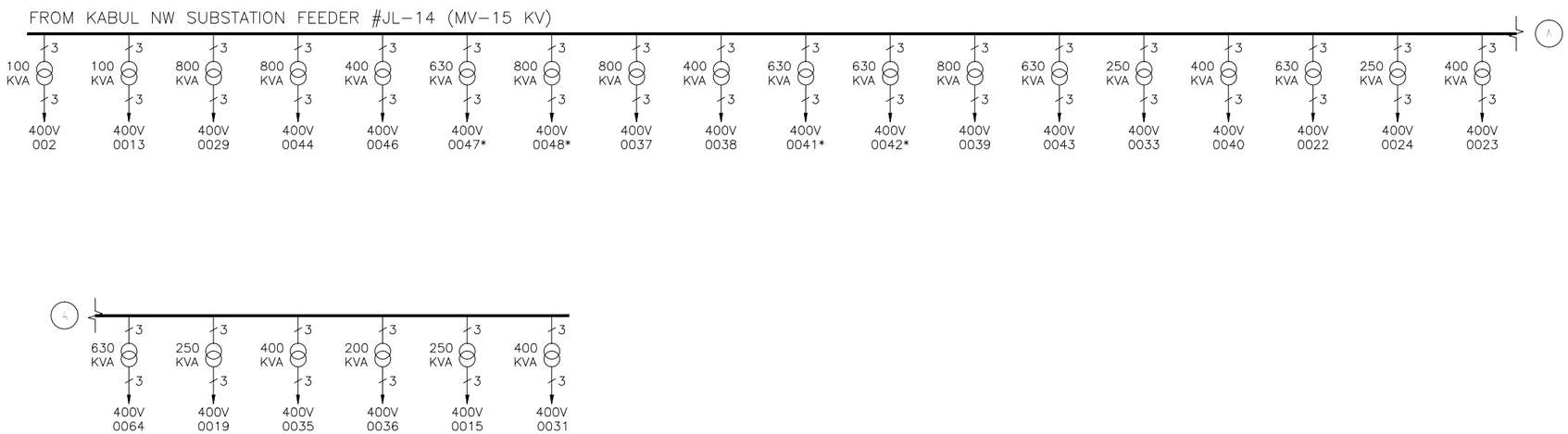

This project was made possible by the United States Agency for International Development and the generous support of the American People through USAID Global Architecture and Engineering IQC Contracts.

SYMB	DESCRIPTION	DATE	APR

DESIGNED BY: RM
DATE: 9/05/2013
DWN BY: KP
SUBMITTED BY: TETRA TECH
CHK BY: NF
FILE NO.: XE656DI

USAID FROM THE AMERICAN PEOPLE

AESP

WO-LT-0059A1
KABUL AREA DISTRIBUTION
M/ FEEDERS FROM NW KABUL SUBSTATION
TO DISTRIBUTION TRANSFORMERS
SINGLE LINE DIAGRAM
FEEDER #JL-14

SHEET REFERENCE NUMBER:
XE-656DI

DRAFT 9/11/2013 10:06 AM

NOT FOR CONSTRUCTION

P:\Afghanistan\SEPS\XE656DI.dwg 9/11/2013 10:06:42 AM Kip Prentice 6436

LEGEND

TRANSFORMER

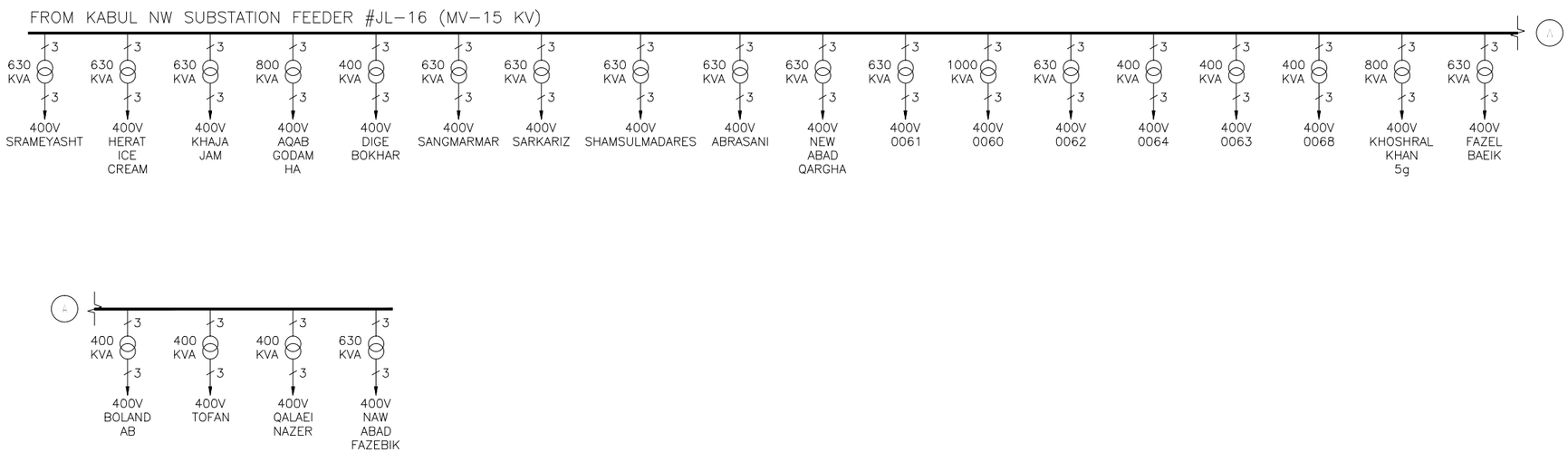

This project was made possible by the United States Agency for International Development and the generous support of the American People through USAID Global Architecture and Engineering IQC Contracts.

SYMB	DESCRIPTION	DATE	APR

DESIGNED BY: RM
DATE: 9/05/2013
DWN BY: KP
SUBMITTED BY: TETRA TECH
CHK BY: NF
FILE NO.: XE-657DI

USAID FROM THE AMERICAN PEOPLE

AESP

WO-LT-0059A1

KABUL NW 220 KV SUBSTATION
MV 15 KV FROM NW KABUL 220 KV A
TO THE 15 KV PASS-OFF
SINGLE LINE DIAGRAM
FEEDER #JL-16

DRAFT 9/11/2013 10:07 AM

SHEET REFERENCE NUMBER:

XE-657DI

NOT FOR CONSTRUCTION

P:\Afghanistan\SEPS\XE657DI.dwg 9/11/2013 10:07:42 AM Kip Prentice 6436

LEGEND

TRANSFORMER

FROM KABUL NW SUBSTATION FEEDER #JL-21 (MV-15 KV)

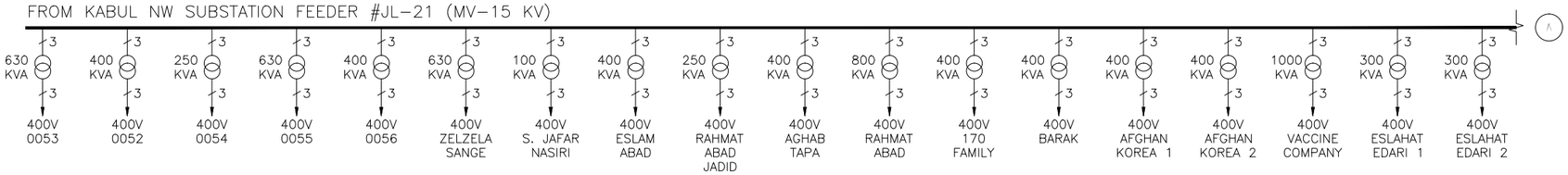

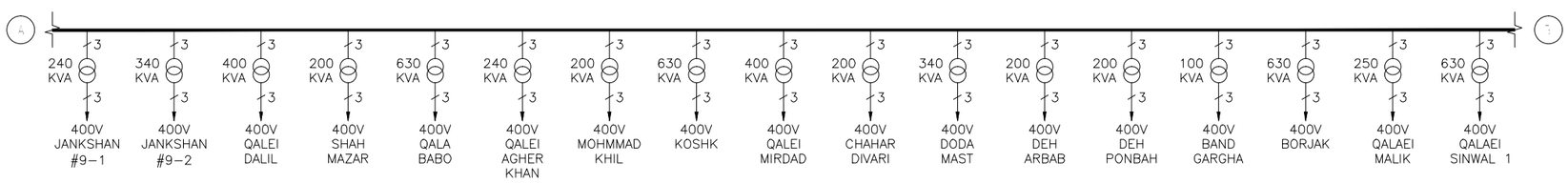

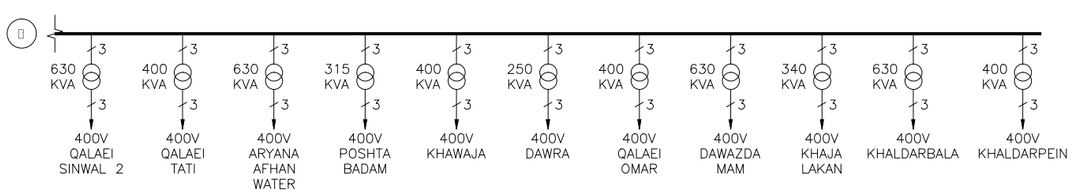

NOT FOR CONSTRUCTION

DRAFT 9/11/2013 10:08 AM

This project was made possible by the United States Agency for International Development and the generous support of the American People through USAID Global Architecture and Engineering IQC Contracts.

SYMB	DESCRIPTION	DATE	APR

DESIGNED BY: RM
DATE: 9/05/2013
DWN BY: KP
SUBMITTED BY: TETRA TECH
CHK BY: NF
FILE NO.: XE658DI

USAID FROM THE AMERICAN PEOPLE

AESP

WO-LT-0059A1

KABUL AREA DISTRIBUTION
W/ FEEDERS FROM NW KABUL SUBSTATION
TO DISTRIBUTION TRANSFORMERS
SINGLE LINE DIAGRAM
FEEDER #JL-21

SHEET REFERENCE NUMBER:

XE-658DI

P:\Afghanistan\SEPS\XE658DI.dwg 9/11/2013 10:08:08 AM Kip Prentice 6436

LEGEND

TRANSFORMER

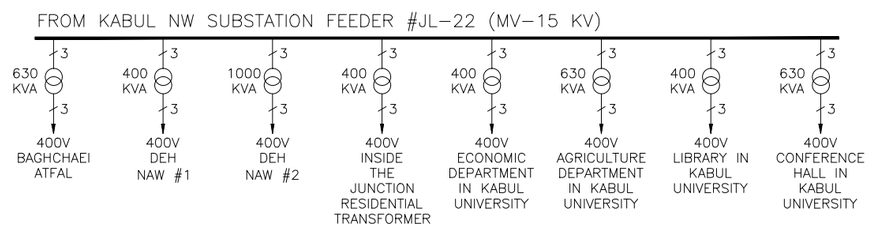

This project was made possible by the United States Agency for International Development and the generous support of the American People through USAID Global Architecture and Engineering IQC Contracts.

SYMB	DESCRIPTION	DATE	APR

DESIGNED BY: RM
DWN BY: KP
CHK BY: NF
DATE: 9/05/2013
SUBMITTED BY: TETRA TECH
FILE NO.: XE659DI

USAID FROM THE AMERICAN PEOPLE

A E S P

WO-LT-0059A1
KABUL AREA DISTRIBUTION
W/ FEEDERS FROM WHERE SUBSTATION
TO DISTRIBUTION TRANSFORMERS
SINGLE LINE DIAGRAM
FEEDER #JL-22

SHEET REFERENCE NUMBER:
XE-659DI

DRAFT 9/11/2013 10:08 AM

NOT FOR CONSTRUCTION

P:\Afghanistan\SEPS\XE659DI.dwg 9/11/2013 10:08:31 AM Kip Prentice 6436

LEGEND

TRANSFORMER

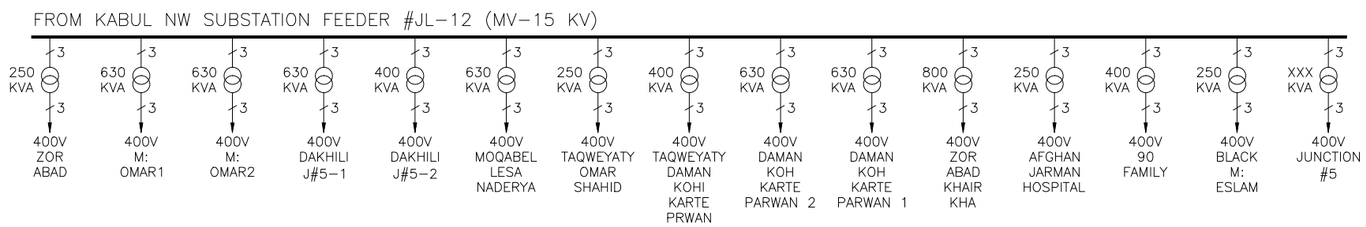

This project was made possible by the United States Agency for International Development and the generous support of the American People through USAID Global Architecture and Engineering IQC Contracts.

SYMB	DESCRIPTION	DATE	APR

DESIGNED BY: RM
DATE: 9/05/2013
DWN BY: KP
SUBMITTED BY: TETRA TECH
CHK BY: NF
FILE NO.: XE660DI

USAID FROM THE AMERICAN PEOPLE

A E S P

WO-LT-0059A1

KABUL NEW 15 MW S/S
MV-11KV 3 WIRE
TO DISTRIBUTION TRANSFORMERS
SINGLE LINE DIAGRAM
FEEDER #JL-12

SHEET REFERENCE NUMBER:

XE-660DI

DRAFT 9/11/2013 10:08 AM

NOT FOR CONSTRUCTION

P:\Afghanistan\SEPS\XE660DI.dwg 9/11/2013 10:08:54 AM Kip Prentice 6436

USAID/Afghanistan
U.S. Embassy Cafe Compound
Great Masood Road
Kabul, Afghanistan
Tel: 202.216.6288
http://afghanistan.usaid.gov