The Afghanistan Engineering Support Program assembled this deliverable. It is an approved, official USAID document. Budget information contained herein is for illustrative purposes. All policy, personal, financial, and procurement sensitive information has been removed. Additional information on the report can be obtained from Firouz Rooyani, Tetra Tech Sr. VP International Operations, (703) 387-2151.

USAID FROM THE AMERICAN PEOPLE | AFGHANISTAN

ENGINEERING SUPPORT PROGRAM

WO-LT-0007
STRATEGIC PROVINCIAL ROADS – SEA
FINAL ROADWAY STATUS SUMMARY
ROAD NOS. 1, 3, 12, 13, 14, 16, 17, 18, 19, 20, 21, 22, 23, 24, 25, 26, 27, 28, 29, 30A, 30B, 31, 32, 33, 35, 36, 37, 38, 39A, 39B, 40A & 40B

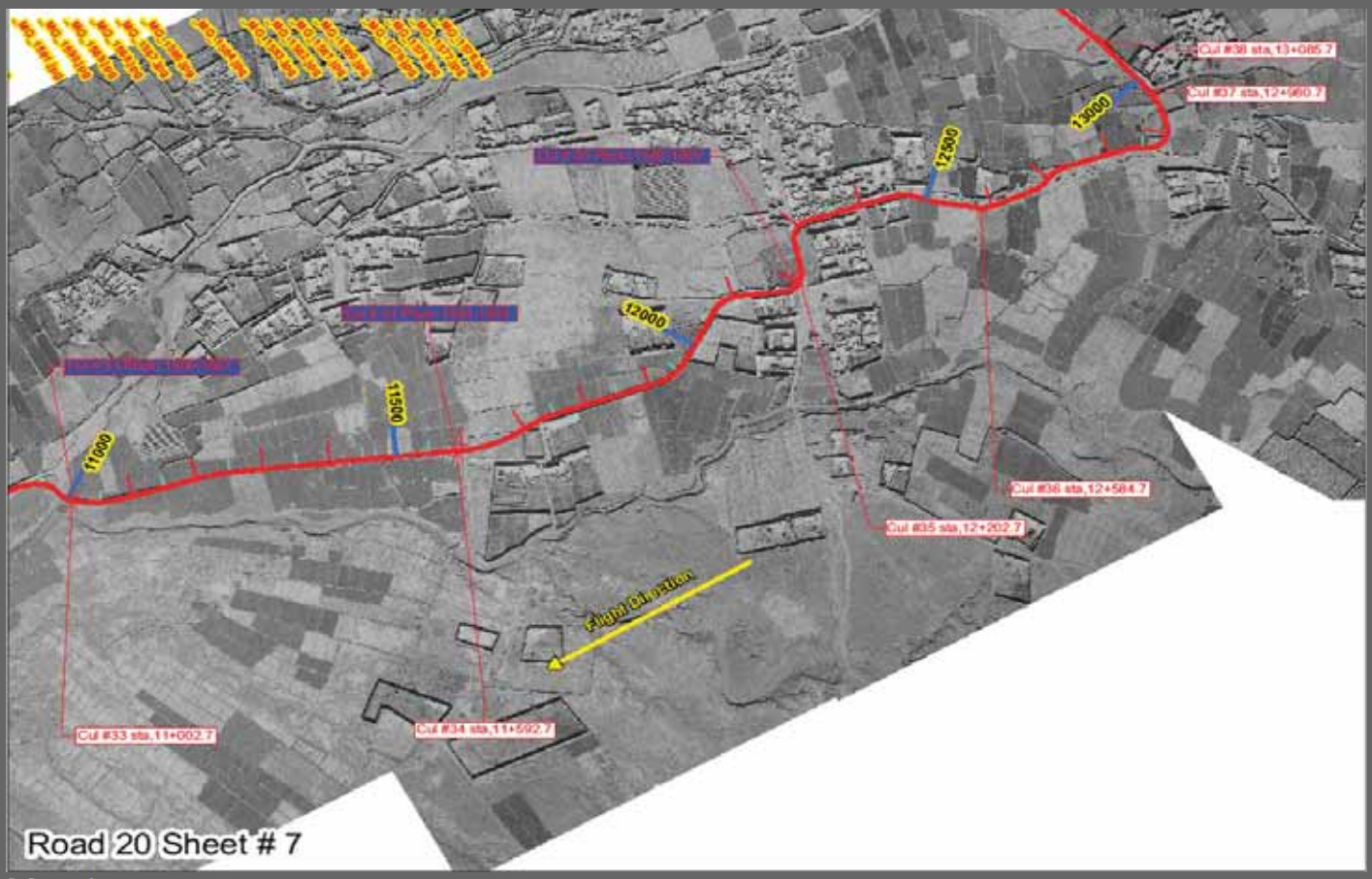

March 3, 2012

This publication was produced for review by the United States Agency for International Development. It was prepared by Tetra Tech, Inc.

This report was prepared for the United States Agency for International Development, Contract No. EDH-I-00-08-00027-00, Task Order 01, Afghanistan Engineering Support Program.

Principal Contacts:

[redacted]
VP International Operations
Tetra Tech, Inc.
Washington, DC
[redacted]

[redacted]
Senior Vice President
Tetra Tech, Inc.
Framingham, MA
[redacted]

[redacted]
Project Manager
Tetra Tech, Inc.
Framingham, MA
[redacted]

[redacted]
Chief of Party
Tetra Tech, Inc.
Kabul, Afghanistan
[redacted]

TETRA TECH

March 3, 2012

[redacted], COR
[redacted] ACOR
USAID – Office of Infrastructure, Engineering and Energy (OIEE)
Café Compound
U.S. Embassy
Great Masood Road Kabul, Afghanistan

Re: WO-LT-0007 Strategic Provincial Roads – SEA
Final Roadway Status Summary
Road Nos. 1, 3, 12, 13, 14, 16, 17, 18, 19, 20, 21, 22, 23, 24, 25, 26, 27, 28, 29, 30A, 30B, 31, 32, 33, 35, 36, 37, 38, 39A, 39B, 40A & 40B

[redacted]

Enclosed is the final Roadway Status Summary for Road Nos. 1, 3, 12, 13, 14, 16, 17, 18, 19, 20, 21, 22, 23, 24, 25, 26, 27, 28, 29, 30A, 30B, 31, 32, 33, 35, 36, 37, 38, 39A, 39B, 40A & 40B. Tetra Tech had no involvement in the oversight of the design or construction of these roadways, but we have provided this summary as a reference for USAID. The enclosed report summarizes the status of the subject roadways as determined by a review of the documentation provided to Tetra Tech by IRD and USAID.

I look forward to meeting with you at your convenience to discuss this report.

Respectfully,

[redacted]
Chief of Party (OIEE-AESP)
Tetra Tech, Inc.

Cc: [redacted] (USAID-OIEE)

AFGHANISTAN ENGINEERING SUPPORT PROGRAM

WO-LT-0007
Strategic Provincial Roads – SEA
FINAL ROADWAY STATUS SUMMARY
ROAD NOS. 1, 3, 12, 13, 14, 16, 17, 18, 19, 20, 21, 22, 23, 24, 25, 26, 27, 28, 29, 30A, 30B, 31, 32, 33, 35, 36, 37, 38, 39A, 39B, 40A & 40B

March 3, 2012

DISCLAIMER

The author's views expressed in this publication do not necessarily reflect the views of the United States Agency for International Development or the United States Government.

Table of Contents

1.0 PROGRAM BACKGROUND 1
2.0 ROADWAY GROUPS 1
2.1 General 1
3.0 ROADWAY DESCRIPTIONS 2
3.1 Group A Roads 2
3.1.1 Road 12 2
3.1.2 Road 14 2
3.1.3 Road 16 2
3.1.4 Road 18 3
3.1.5 Road 19 3
3.1.6 Road 20 3
3.1.7 Road 22 3
3.1.8 Road 24 4
3.1.9 Road 25 4
3.1.10 Road 27 4
3.1.11 Road 37 4
3.1.12 Road 38 5
3.1.13 Road 39A 5
3.1.14 Road 40A 5
3.2 Group B Roads 6
3.2.1 Road 1 6
3.2.2 Road 3 6
3.2.3 Road 13 6
3.2.4 Road 17 6
3.2.5 Road 21 6
3.2.6 Road 23 6
3.2.7 Road 26 7
3.2.8 Road 28 7
3.2.9 Road 29 7
3.2.10 Roads 30A and 30B 7
3.2.11 Road 31 7
3.2.12 Road 32 7
3.2.13 Road 33 7
3.2.14 Road 35 8

3.2.15 Road 36 8
3.2.16 Road 39B 8
3.2.17 Road 40B 8

List of Appendices

Appendix A: PROJECT MAPS
Appendix B: PROJECT PLAN INFORMATION

1.0 PROGRAM BACKGROUND

USAID's original Cooperative Agreement with International Relief and Development (IRD) was to construct approximately 1,500 kilometers (km) of engineered gravel roads in Ghazni, Khost, Kunar, Laghman, Nangarhar, Paktika, and Paktya provinces in the east and Hilmand, Kandahar, and Uruzgan provinces in the south. Additionally, the agreement included 92 km of paved roads in Ghazni and Paktya provinces. Through road construction and community outreach, this project aimed to improve stability and security in southern and eastern Afghanistan; facilitate efficient movement of goods and people; increase access to government and social services; decrease ethnic divisions between regions; facilitate development of the agriculture sector; increase local capacity for sustainable road construction, rehabilitation, and maintenance; and provide employment opportunities for the people of Afghanistan. Due to deteriorating security and lack of performance by some of the roadway subcontractors, the scope of the SPR program was reduced and several of the original roads were removed from the program.

USAID contracted with Tetra Tech (TT) to provide a Quality Assurance (QA) Oversight Program for the construction of USAID funded roads with both gravel and asphalt surfaces. The program involved developing a Road Construction QA Manual; securing, training and deploying Afghan QA Monitors; providing supervision; providing QA oversight of road construction projects; monitoring contractors QA/QC test on materials and products for the roads to analyze compliance with design specifications and construction plans; and reporting results to USAID. Tetra Tech's oversight assured that the SPR roads were constructed to agreement standards and that the roads were in a safe and useable condition as they were turned over for acceptance.

2.0 ROADWAY GROUPS

2.1 General

The original SPR-SEA program included 40 individual roads. As the program matured, Roads 9, 30, 39 and 40 were each divided into 2 individual projects and Roads 41A, 41B, 41C, and 41D were added to the program raising the total number of potential road contracts to 48. The roads discussed in this report were not subject to QA oversight or review by Tetra Tech since progress on these projects had ceased prior to our involvement in the program.

This report is intended to serve as a reference for USAID for the status of the subject roads, and all of the information contained in this report is based on material provided to Tetra Tech by IRD.

For the purposes of this document, the roads are divided into two groups: Group A; roads that have received some measure of improvement by IRD and their subcontractors, and Group B; roads that were never initiated. Group A roads include Road Nos. 12, 14, 16, 18, 19, 20, 22, 24, 25, 27, 37, 38, 39A, and 40A. Group B roads include Road Nos. 1, 3, 13, 17, 21, 23, 26, 28, 29, 30A, 30B, 31, 32, 33, 35, 36, 39B, and 40B. Available maps for the Group A roads showing the road location and approximate stationing are included in Appendix A. Available Project Plan information including cover sheets, typical sections, structures schedules and bridge plans (when applicable) for the Group A roads is included in Appendix B. The appendix information is not available for the Group B roads.

3.0 ROADWAY DESCRIPTIONS

3.1 Group A Roads

3.1.1 Road 12

Road No. 12 is located in Khost province and connects Musa Khel and Khost Mela. IRD documents indicate that design was completed for the entire road and as-built drawings dated July 2011 were received from IRD. The original project length was 11.2 km, but the as-built drawings note that construction began at Sta 0+300, effectively reducing the project length to 10.9 km. The carriageway width was proposed as 7 m with 1.0 m shoulders on each side. There were 35 culverts, 1 causeway, 1 bridge, retaining walls, and lined side drains proposed along this road. The proposed road structure was designed as a 300 mm sub grade, 360 mm sub base and 150 mm crushed aggregate base (CAB).

In the Final Roads Rehabilitation Status report dated October 2011, IRD reports that 10.8 km of earthwork, 10.5 km of sub grade, 10.3 km of sub base and 8.5 km of CAB (Sta 0+500 to 9+000) was completed. IRD also notes that 20 culverts were completed and the causeway is approximately 50% complete. The Structure Schedules for this road were not included in the appendix because inconsistencies in the design plans prevented Tetra Tech from accurately identifying the actual schedule.

3.1.2 Road 14

Road No. 14 is located in Khost province and connects Tani to Shekhamir. This road was completed in 2009 and the final inspection was performed prior to Tetra Tech's involvement in the SPR program. The road is 9.8 km in length, and IRD asserts that the roadway was completed in its entirety. A Structures Schedule is not available for this roadway.

The carriageway width is 7 m with 1.5 m shoulders on each side, and the road structure is composed of a 400 mm sub base and 130 mm CAB per the as-built plans.

3.1.3 Road 16

Road No. 16 is located in Ghazni province and runs a total of 64 km between Jaghuri and Malistan. In the December 20, 2010 letter to IRD, USAID descoped Road No. 16 from km 10 through km 40. The carriageway width was proposed as 7 m with 1.5 m shoulders on each side in flat and rolling terrain and 1 m shoulders in mountainous terrain. There were numerous culverts, several causeways, retaining walls, and lined side drains proposed along this road. The proposed road structure was designed as a 300 mm sub grade, 460 mm sub base and 130 mm CAB. The road was designed with a centerline crown and cross slope of 4%.

In the Final Roads Rehabilitation Status report dated October 2011, IRD reports that 28.8 km of excavation, 10.1 km of embankment, 10.0 km of sub grade, and 7.6 km of sub base were completed. IRD also notes that 53 culverts were completed but that no causeways were constructed.

3.1.4 Road 18

This road is located in Paktika province with a total length of 21 km. Road No. 18 connects Mest to Ghundakey. The project construction started on September of 2009, and IRD asserts that the entire road is completed per original approved plans.

Based on the as-built drawings, the carriageway width is 7 m with 1.5 m shoulders on each side in flat and rolling terrain and 1 m shoulders in mountainous terrain. There are 37 culverts, 6 causeways, retaining walls, and lined side drains proposed along this road. The proposed road structure is composed of a 300 mm sub grade, 360 mm sub base and 150 mm CAB. The road was designed with a centerline crown and cross slope of 4%.

3.1.5 Road 19

Road No. 19 is located in Paktika province with a length of 7 km. The road connects Ghundakey to Omna. In the December 20, 2010 letter to IRD, USAID completely descoped Road No. 19, from km 0 through km 7. The carriageway width was proposed as 7 m with 1.5 m shoulders on each side in flat and rolling terrain and 1 m shoulders in mountainous terrain. The proposed road structure was designed as a 300 mm sub grade, 360 mm sub base and 150 mm CAB. The road was designed with a centerline crown and cross slope of 4%. A Structures Schedule is not available for this roadway.

IRD stated in their October 3, 2011 Final Implementation Plan update that excavation and embankment are complete for the entire road (6.3 km) and that some structures are complete.

3.1.6 Road 20

Road No. 20 is located in Paktika province and runs a total of 30 km between Yahya Khel, Baki and Khayr Kot. In the December 20, 2010 letter to IRD, USAID descoped Road No. 20 from km 15 through km 30. The carriageway width was proposed as 7 m with 1.5 m shoulders on each side. There were 101 culverts, 10 causeways, retaining walls, and lined side drains proposed along this road. The proposed road structure was designed as a 300 mm sub grade, 420 mm sub base and 130 mm CAB.

In the Final Roads Rehabilitation Status report dated October 2011, IRD reports that 21 km of earthworks, 19.0 km of sub grade, 15.4 km of sub base and 15.1 km (Sta 0+000 to 15+100) of CAB was completed. IRD also noted that 32 culverts and 2 causeways were completed.

3.1.7 Road 22

This road is located in Paktika province and connects Waza Khawa to Terwah. The length of this road is 59 km, and in the December 20, 2010 letter to IRD, USAID completely descoped Road No. 22 from km 0 through km 59.

The accepted 2011 Final Implementation Plan dated March 1, 2011 lists the length of this roadway as only 53 km. This document notes that demining and the 60% design were completed from Sta 0+000 to 53+000, and that clearing and grubbing was performed from Sta 0+000 to 7+500.

3.1.8 Road 24

Road No. 24 is located in Zabul province with a length of 48 km. The road connects Shamulzaye to the Pakistan border. In the December 20, 2010 letter to IRD, USAID completely descoped Road No. 24, from km 0 through km 48. The carriageway width was proposed as 7 m with 1.5 m shoulders on each side in flat and rolling terrain and 1 m shoulders in mountainous terrain. The proposed road structure was designed as a 300 mm sub grade, 360 mm sub base and 150 mm CAB. The road was designed with a centerline crown and cross slope of 4%. There were numerous culverts, 4 causeways, retaining walls, and lined side drains proposed along this road.

In the Final Roads Rehabilitation Status report dated October 2011, IRD reports that 19 km of excavation, 12.9 km of embankment, 12.5 km of sub grade and 10.0 km of sub base was completed. IRD makes no reference to having completed any of the drainage structures. The as-built plans dated September 27, 2011 indicate that 19 culverts were constructed.

3.1.9 Road 25

Road No. 25 is located in Ghazni and Zabul provinces with a length of 83 km, and the road connects Nawa to Shinkay. In the December 20, 2010 letter to IRD, USAID completely descoped Road No. 25 from km 0 through km 83. Tetra Tech has no design documentation for this roadway.

IRD stated in their October 2, 2011 Final Implementation Plan update that 4.6 km of excavation and embankment are complete between Sta 0+000 to Sta 5+900 and that some drainage structures are complete. The accepted 2011 Final Implementation Plan dated March 1, 2011 notes that demining is complete for the entire length and that the 60% design is complete from Sta 0+000 to 15+000.

3.1.10 Road 27

This 93 km long road is located in Kandahar province and connects Shah Wali Kot to Nesh. In the December 20, 2010 letter to IRD, USAID descoped Road No. 27 from km 8 through km 74. The carriageway width was proposed as 7 m with 1.0 or 1.5 m shoulders on each side. There were more than 361 culverts, several causeways, 3 bridges, retaining walls, and lined side drains proposed along this road. The proposed road structure was designed as a 300 mm sub grade, 260 mm sub base and 150 mm CAB. The road was designed with a centerline crown and cross slope of 4%.

In the Final Roads Rehabilitation Status report dated October 2011, IRD reports that 8.6 km of excavation, 25.6 km of embankment, 25.0 km of sub grade, 21.2 km of sub base and 4.2 km (Sta 0+000 to 4+200) of CAB was completed. IRD also noted that 20 culverts were completed. The Structure Schedules for this road were not included in the appendix because inconsistencies in the design plans prevented Tetra Tech from accurately identifying the actual schedule.

3.1.11 Road 37

Road No. 37 is located in Uruzgan and Daykundi provinces and connects Chora to Gizab. The total length of this road is 91 km, and in the December 20, 2010 letter to IRD, USAID completely descoped Road No. 37 from km 0 through km 91. The carriageway width was proposed as 7 m with 1.5 m shoulders on each side. The proposed road structure was

designed as a 300 mm sub grade, 260 mm sub base and 150 mm CAB. The road was designed with a centerline crown and cross slope of 4%.

In the Final Roads Rehabilitation Status report dated October 2011, IRD reports that 34.8 km of excavation, 25.1 km of embankment, 25.1 km of sub grade and 8.4 km of sub base was completed. IRD makes no reference to having completed any of the drainage structures.

3.1.12 Road 38

This 80 km road is located in Ghazni and Uruzgan provinces and connects Khas Uruzgan to Malistan. In the December 20, 2010 letter to IRD, USAID completely descoped Road No. 38 from km 0 through km 80. The carriageway width was proposed as 7 m with 1.5 m shoulders on each side in flat and rolling terrain and 0.5 m shoulders in mountainous terrain. The proposed road structure was designed as a 420 mm sub base and 150 mm CAB. The road was designed with a centerline crown and cross slope of 4%.

In the Final Roads Rehabilitation Status report dated October 2011, IRD reports that 37 km of earthworks and 11.9 km of embankment were completed. Demining was only completed from km 0 through km 48, and IRD makes no reference to having completed any of the drainage structures.

3.1.13 Road 39A

Road No. 39A is located in Daykundi province and connects Daykundi to Tamazon Pass. The length of this road is 70 km. In the December 20, 2010 letter to IRD, USAID completely descoped Road No. 39A from km 0 through km 70. The carriageway width was proposed as 6 m and the proposed road structure was designed as a 300 mm sub grade, 360 mm sub base and 150 mm CAB.

In the Final Roads Rehabilitation Status report dated October 2011, IRD reports that 40 km of excavation, 9 km of embankment and 3 km of sub grade was completed. IRD makes no reference to having completed any of the drainage structures.

3.1.14 Road 40A

Road No. 40A is located in Daykundi province and connects Kajran to Daymalek. The length of this road is 59 km. In the December 20, 2010 letter to IRD, USAID completely descoped Road No. 40A from km 0 through km 59. The carriageway width was proposed as 7 m with 1.5 m shoulders on each side. The proposed road structure was designed as a 300 mm sub grade, 250 mm sub base and 150 mm CAB. The road was designed with a centerline crown and cross slope of 4%. A Structures Schedule is not available for this roadway.

In the Final Roads Rehabilitation Status report dated October 2011, IRD reports that 36 km of excavation, 8 km of embankment and 7 km of sub grade was completed. IRD makes no reference to having completed any of the drainage structures.

3.2 Group B Roads

3.2.1 Road 1

This 18 km road is located in Kunar province and connects Asmar to Nishagam. In the December 20, 2010 letter to IRD, USAID completely descoped Road No. 1 from km 0 through km 18. IRD documentation indicates that this road was cancelled prior to Tetra Tech's involvement in the SPR program.

Tetra Tech has no further information about Road No. 1.

3.2.2 Road 3

This 11 km road is located in Kunar province and connects Khas Kunar to Nawa Pass. In the December 20, 2010 letter to IRD, USAID completely descoped Road No. 3 from km 0 through km 11. IRD documentation indicates that this road was cancelled prior to Tetra Tech's involvement in the SPR program.

Tetra Tech has no further information about Road No. 3.

3.2.3 Road 13

This 18 km road is located in Khost province and connects Yagobi to Zambar. In the December 20, 2010 letter to IRD, USAID completely descoped Road No. 13 from km 0 through km 18. IRD documentation indicates that this road was cancelled prior to Tetra Tech's involvement in the SPR program.

Tetra Tech has no further information about Road No. 13.

3.2.4 Road 17

This 59 km road is located in Ghazni and Paktika provinces and connects Nawa to Dila. In the December 20, 2010 letter to IRD, USAID completely descoped Road No. 17 from km 0 through km 59.

Tetra Tech has no further information about Road No. 17.

3.2.5 Road 21

This 69 km road is located in Kandahar province and connects Waza Khawa to Wor and Wor to Mamay. In the December 20, 2010 letter to IRD, USAID completely descoped Road No. 21 from km 0 through km 69.

Tetra Tech has no further information about Road No. 21.

3.2.6 Road 23

This 110 km road is located in Zabul province and connects Shahjoy to Day Chopan. In the December 20, 2010 letter to IRD, USAID completely descoped Road No. 23 from km 0 through km 110.

Tetra Tech has no further information about Road No. 23.

3.2.7 Road 26

This 22 km road is located in Zabul province and connects Shinkay to Shamulzaye. IRD documentation indicates that this road was cancelled prior to Tetra Tech's involvement in the SPR program.

Tetra Tech has no further information about Road No. 26.

3.2.8 Road 28

This 45 km road is located in Kandahar province and connects Nesh to Ghorak. In the December 20, 2010 letter to IRD, USAID completely descoped Road No. 28 from km 0 through km 45.

Tetra Tech has no further information about Road No. 28.

3.2.9 Road 29

This 17 km road is located in Kandahar province and connects Nesh to Khakriz. In the December 20, 2010 letter to IRD, USAID completely descoped Road No. 29 from km 0 through km 19.

Tetra Tech has no further information about Road No. 29.

3.2.10 Roads 30A and 30B

This road is located in Kandahar province and connects Bakah to Maruf. The total length of the road is 80 km and it was split into two contracts of 40 km each. In the December 20, 2010 letter to IRD, USAID completely descoped Road No. 30A from km 0 through km 40 and Road No. 30B from km 40 through km 80.

Tetra Tech has no further information about Road Nos. 30A and 30B.

3.2.11 Road 31

IRD documentation indicates that this road was cancelled prior to Tetra Tech's involvement in the SPR program. Tetra Tech has no information about Road No. 31.

3.2.12 Road 32

This road is located in Hilmand province and connects Spin Boldak to Bikoh. IRD documentation indicates that this road was cancelled prior to Tetra Tech's involvement in the SPR program.

Tetra Tech has no further information about Road No. 32.

3.2.13 Road 33

This 16 km road is located in Hilmand province and connects Nad Ali to Lashkargah. In the December 20, 2010 letter to IRD, USAID completely descoped Road No. 33 from km 0 through km 16.

Tetra Tech has no further information about Road No. 33.

3.2.14 Road 35

This 35 km road is located in Uruzgan province and connects Tirin Kot Junction to Chora. In the December 20, 2010 letter to IRD, USAID completely descoped Road No. 35 from km 0 through km 35. IRD documentation indicates that this road was cancelled prior to Tetra Tech's involvement in the SPR program.

Tetra Tech has no further information about Road No. 35.

3.2.15 Road 36

This 106 km road is located in Uruzgan province and connects Tirin Kot to Khas Uruzgan. In the December 20, 2010 letter to IRD, USAID completely descoped Road No. 36 from km 0 through km 106.

Tetra Tech has no further information about Road No. 36.

3.2.16 Road 39B

This 55 km road also located in Daykundi province and connects Tamazon Pass to Gizab. In the December 20, 2010 letter to IRD, USAID completely descoped Road No. 39B from km 0 through km 55.

Tetra Tech has no further information about Road No. 39B.

3.2.17 Road 40B

This 101 km road is located in Daykundi province and connects Day Malek to Daykundi. In the December 20, 2010 letter to IRD, USAID completely descoped Road No. 40B from km 60 through km 160.

Tetra Tech has no further information about Road No. 40B.

Appendix A: PROJECT MAPS

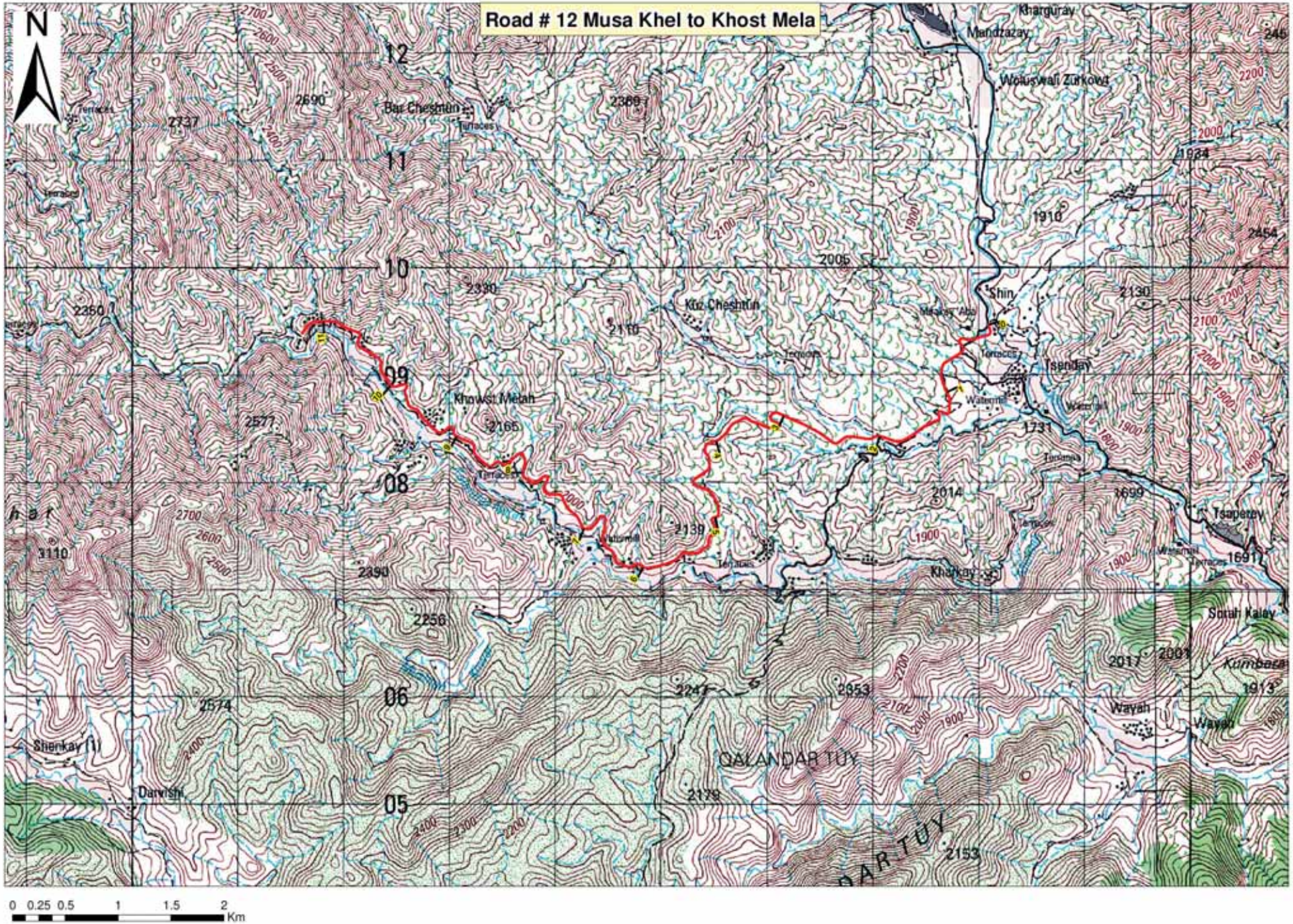
Road # 12 Musa Khel to Khost Mela
N
12
11
10
09
08
06
05
Bar Cheshtun
Kuz Cheshtun
Khowst Melah
Shin
Tsenday
Tsaperey
Kharkay
Wayah
Sorah Kalay
Darvishi
QALANDAR TUY
Mandzazay
Wolusvali Zurkowt
Kharguray
0 0.25 0.5 1 1.5 2 Km

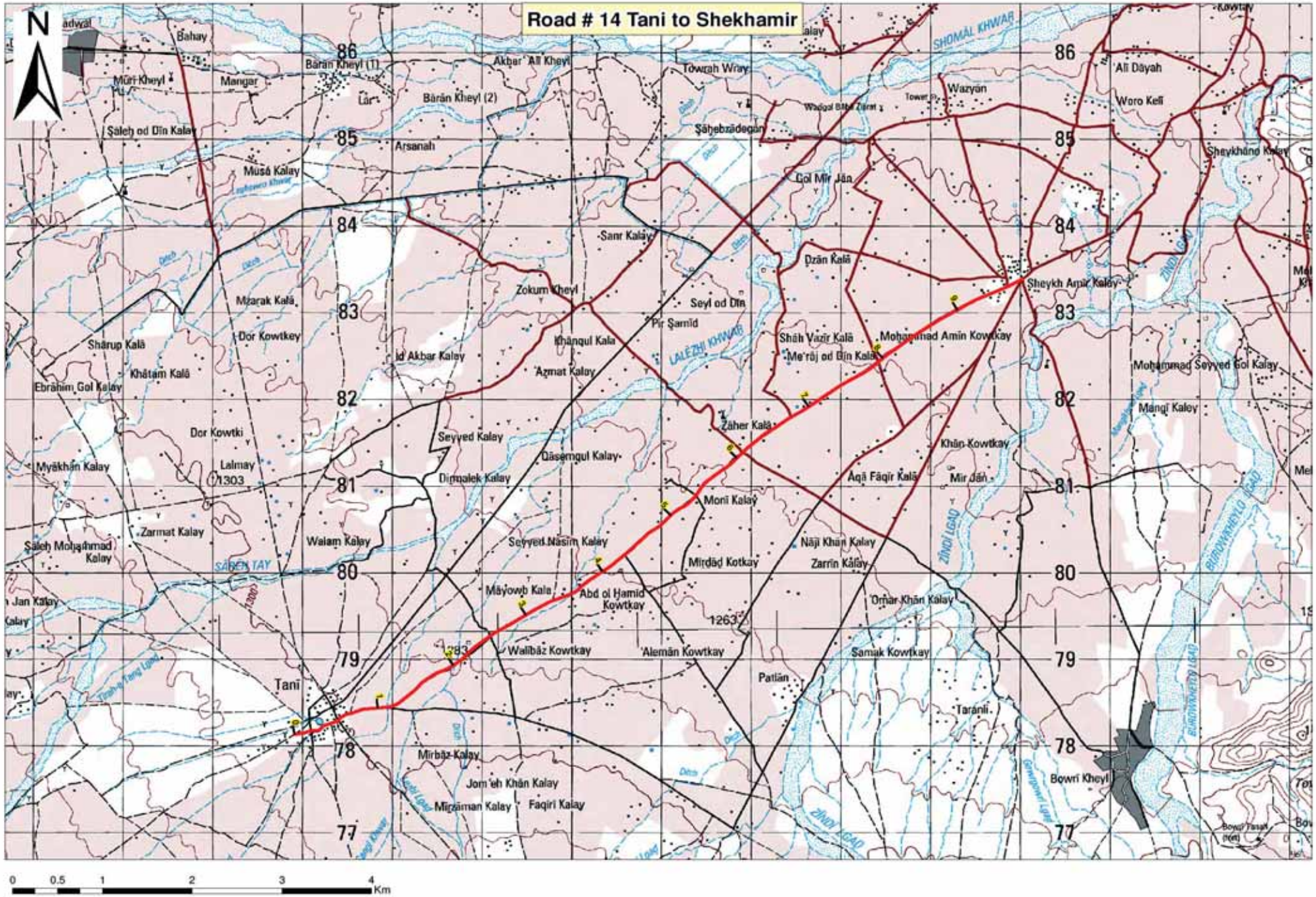
Road # 14 Tani to Shekhamir
N
Bahay
Mūri Kheyl
Mangar
Bārān Kheyl (1)
Bārān Kheyl (2)
Akbar 'Ali Kheyl
Towrah Wray
Wazyān
'Alī Dāyah
Woro Kelī
Sheykhāno Kalay
Ṣāleḥ od Dīn Kalay
Arsanah
Mūsā Kalay
Ṣāḥebzādegān
Gol Mīr Jān
Sanr Kalay
Dzān Kalā
Sheykh Amīr Kalay
Zokum Kheyl
Seyl od Dīn
Pir Ṣamīd
Mzarak Kalā
Dor Kowtkey
Shārup Kalā
Khātam Kalā
Ebrāhīm Gol Kalay
Id Akbar Kalay
Khānqul Kala
'Azmat Kalay
Shāh Vazīr Kalā
Me'rāj od Dīn Kalā
Mohammad Amīn Kowtkay
Mohammad Seyyed Gol Kalay
Mangī Kaley
Dor Kowtki
Seyyed Kalay
Zāher Kalā
Khān Kowtkay
Myākhān Kalay
Lalmay
1303
Dīrmalek Kalay
Dāsemqul Kalay
Āqā Fāqīr Kalā
Mīr Jān
Monī Kalay
Zarmat Kalay
Ṣāleḥ Moḥammad Kalay
Walam Kalay
Seyyed Nāsīm Kalay
Nājī Khān Kalay
Zarrīn Kalay
Mīrdād Kotkay
Māyowb Kala
Abd ol Ḥamīd Kowtkay
'Omar Khān Kalay
1263
Walībāz Kowtkay
'Alemān Kowtkay
Samak Kowtkay
Patlān
Tanī
Taranli
Mīrbāz Kalay
Jom'eh Khān Kalay
Mīrzāman Kalay
Faqīrī Kalay
Bowrī Kheyl
SHOMĀL KHWAR
LALĒZHI KHWAR
ZĪNDĪ LGAD
SĀBEN TAY
BUROWKHEYLO LGAD
86
85
84
83
82
81
80
79
78
77
0
0.5
1
2
3
4
Km

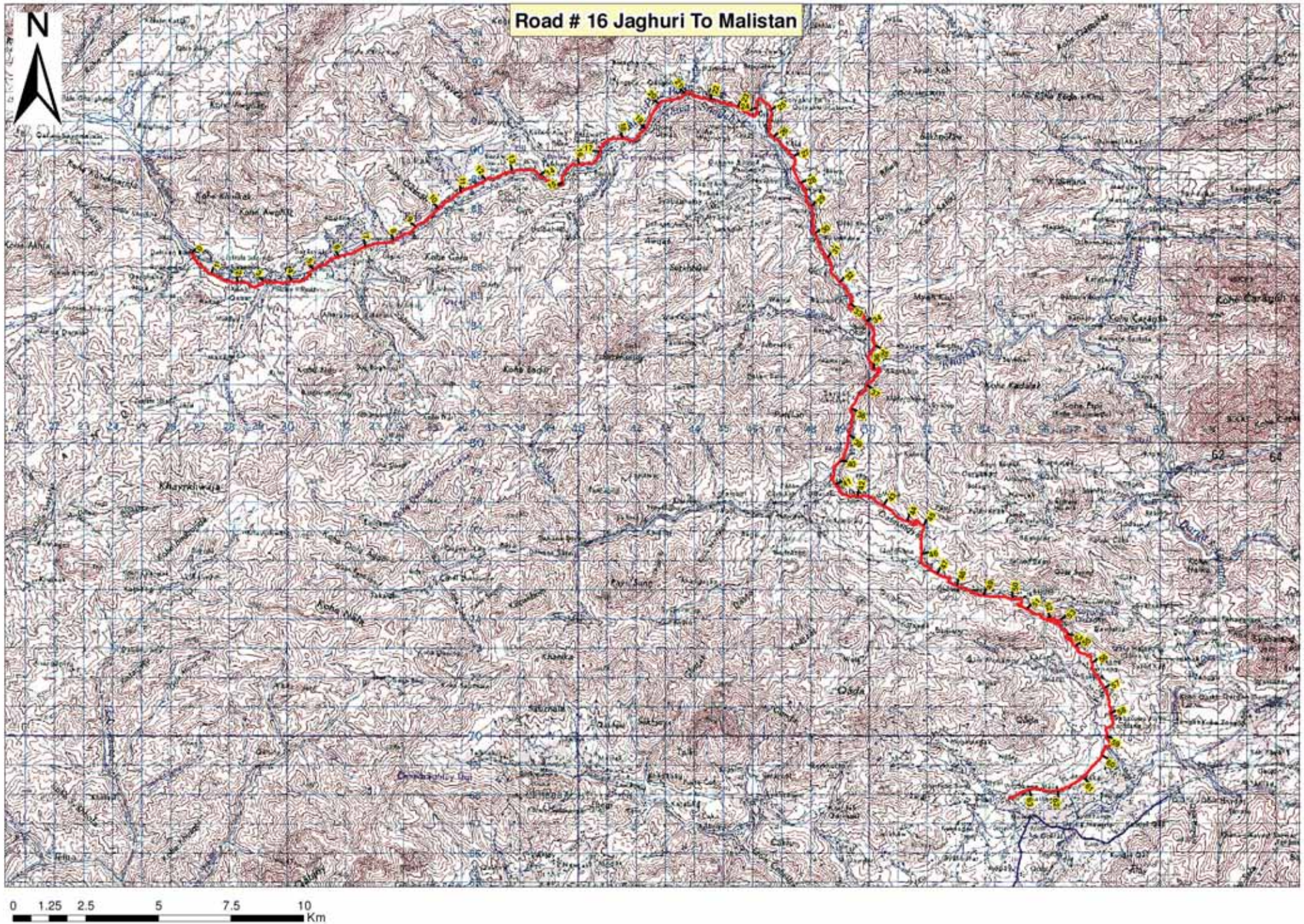
Road # 16 Jaghuri To Malistan
N
0 1.25 2.5 5 7.5 10
Km

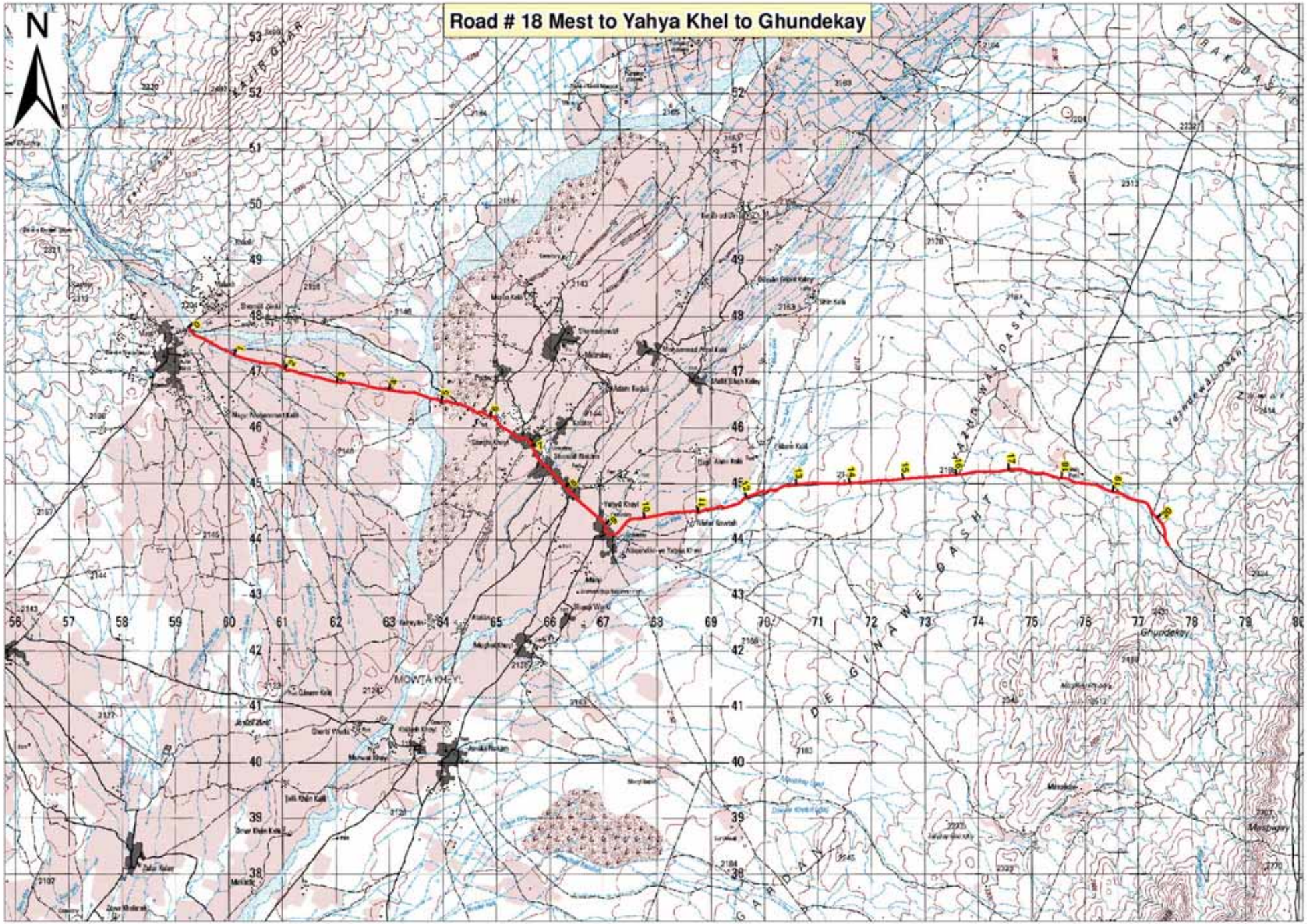
Road # 18 Mest to Yahya Khel to Ghundekay
N
MOWTA KHEYL
Ghundekay
0 0.5 1 2 3 4 Km

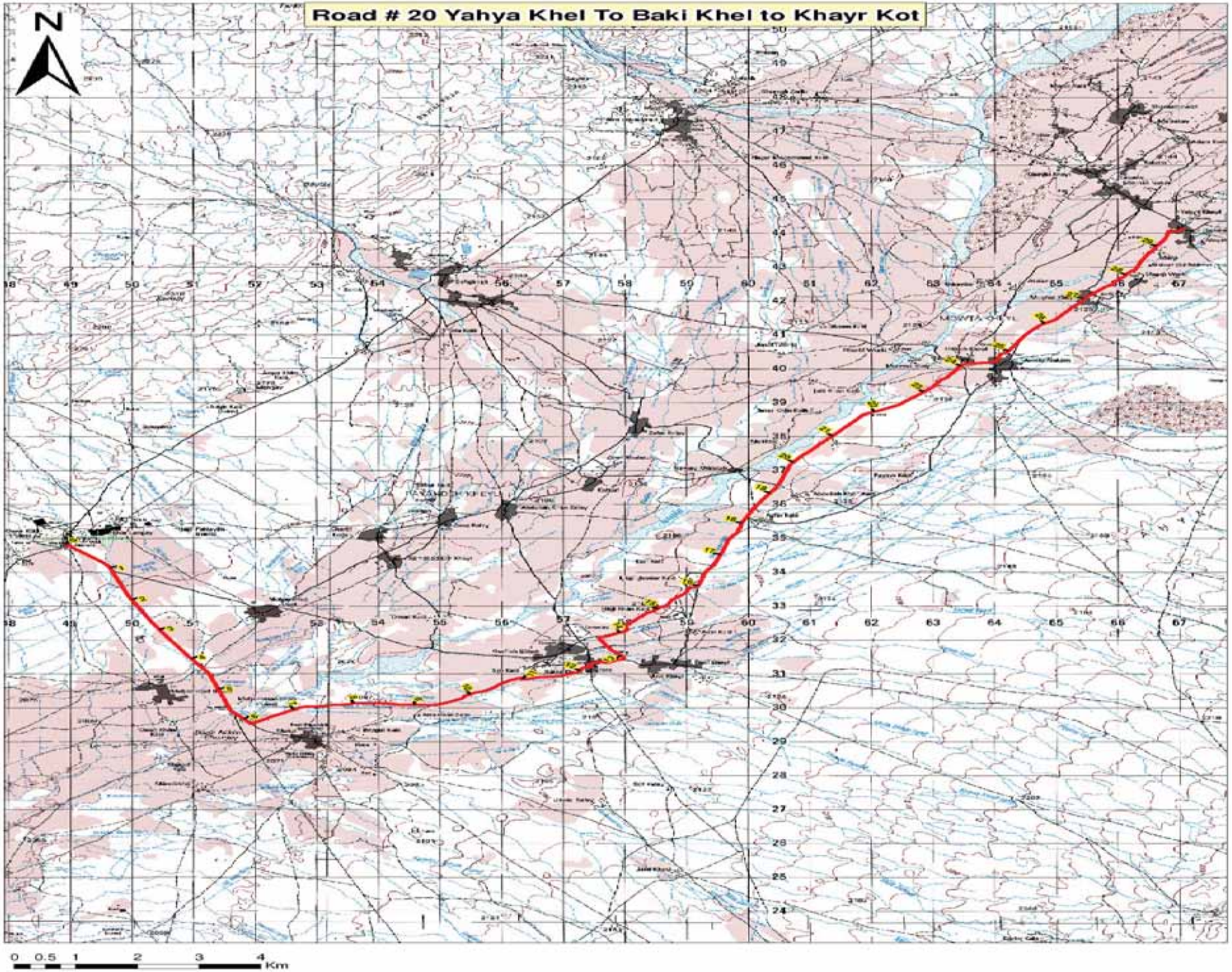
Road # 20 Yahya Khel To Baki Khel to Khayr Kot
N
0 0.5 1 2 3 4 Km

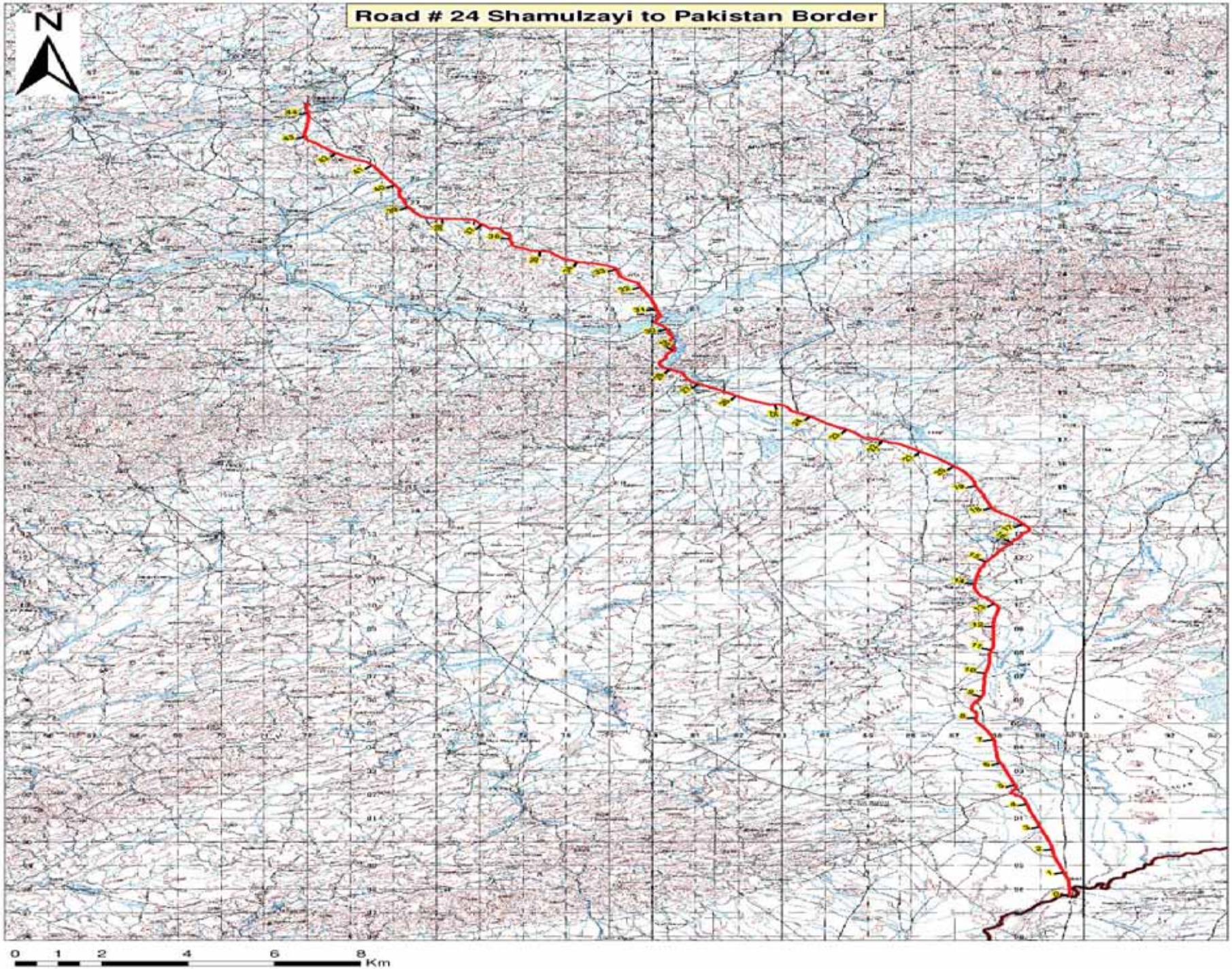
Road # 24 Shamulzayi to Pakistan Border
N
0 1 2 4 6 8 Km

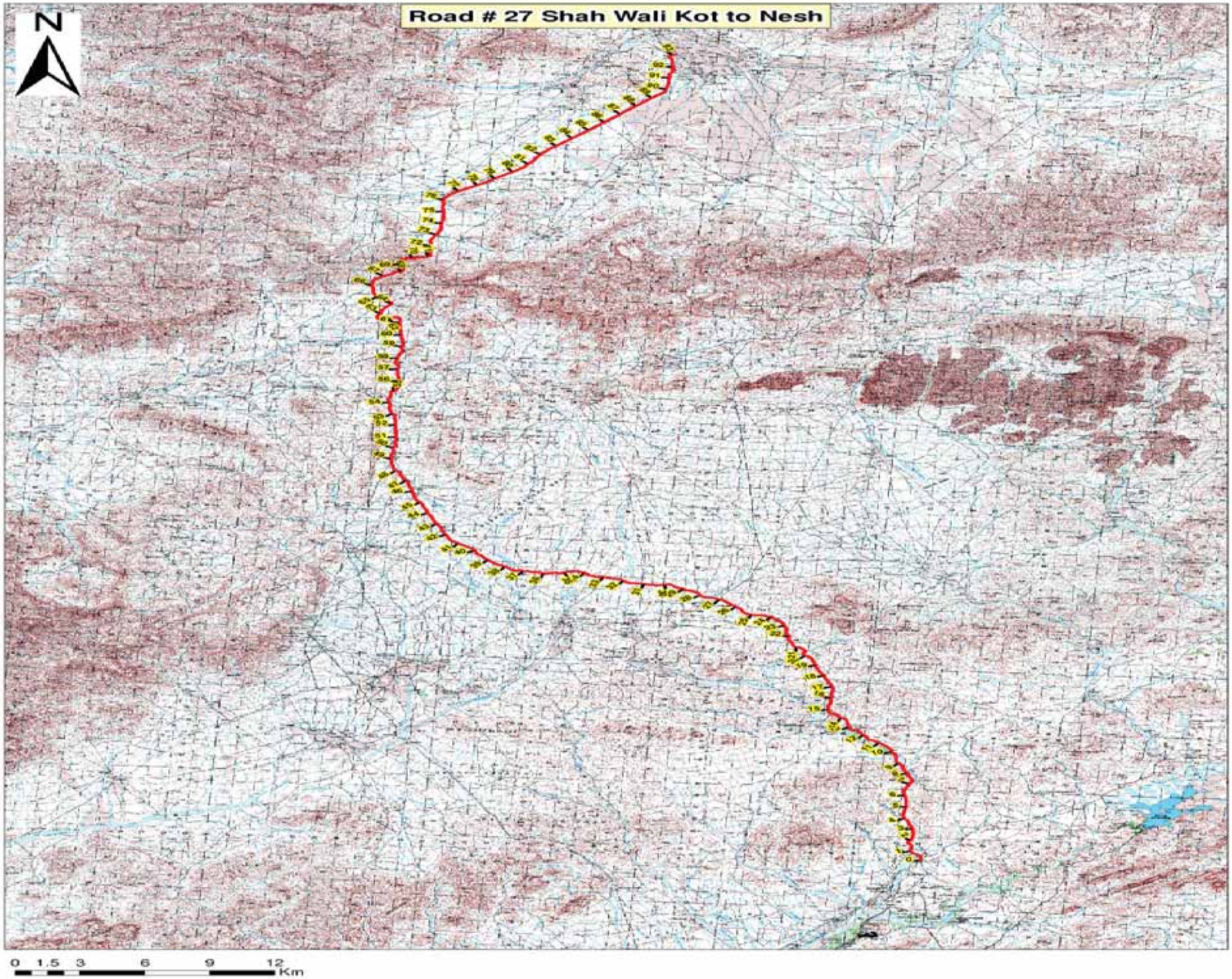
Road # 27 Shah Wali Kot to Nesh
N
0 1.5 3 6 9 12
Km

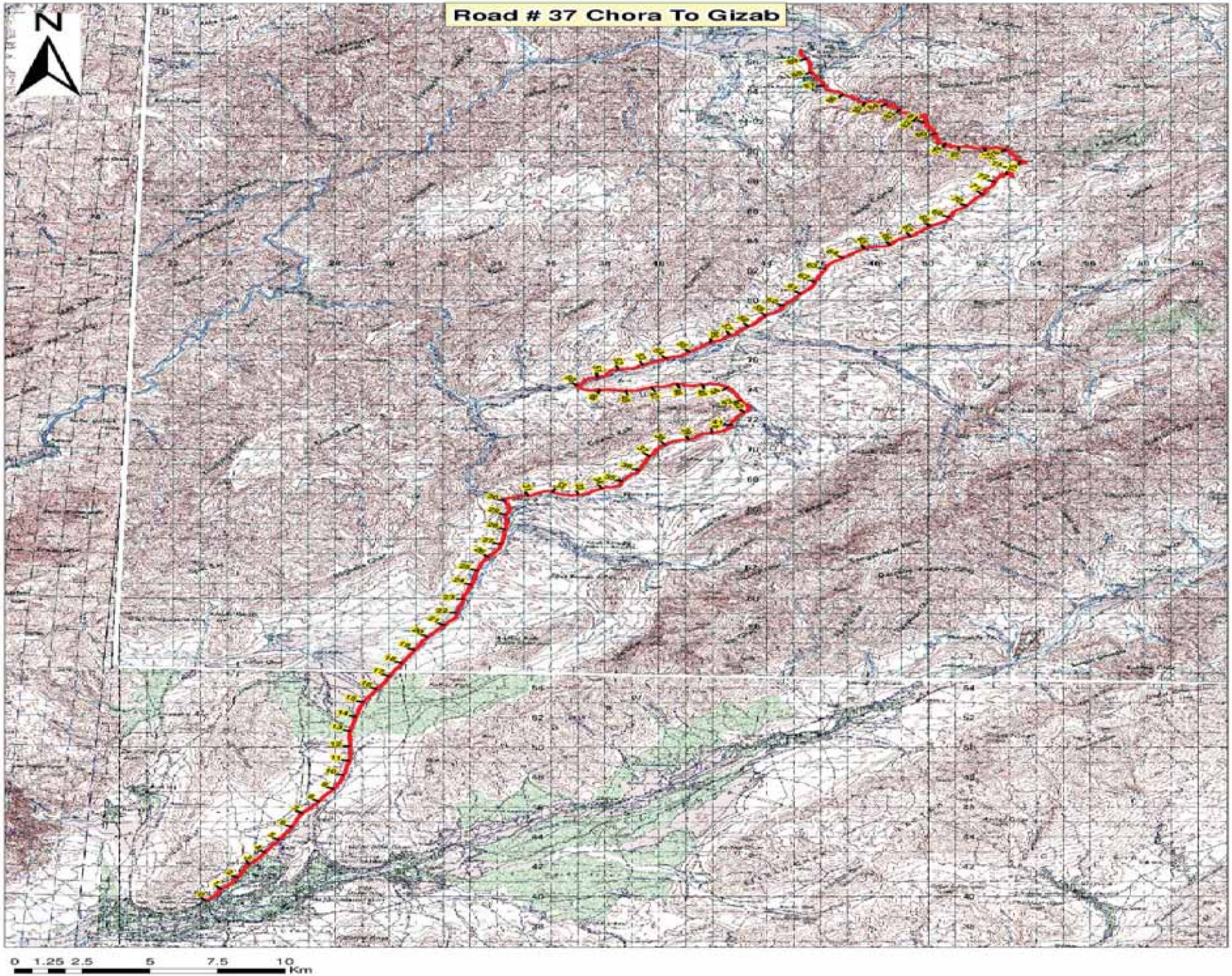
Road # 37 Chora To Gizab
N
0 1.25 2.5 5 7.5 10
Km

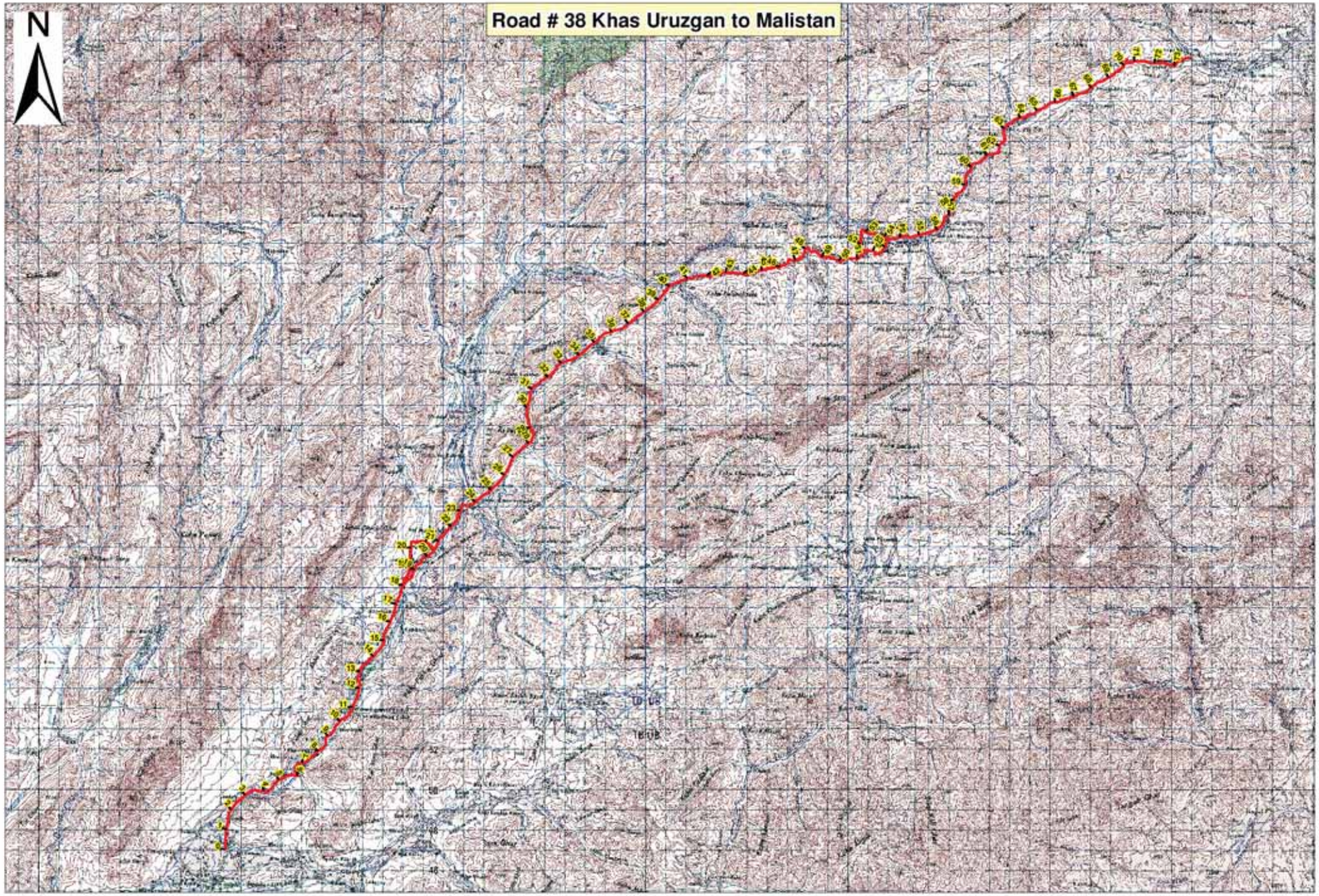
Road # 38 Khas Uruzgan to Malistan
N
0 1.5 3 6 9 12
Km

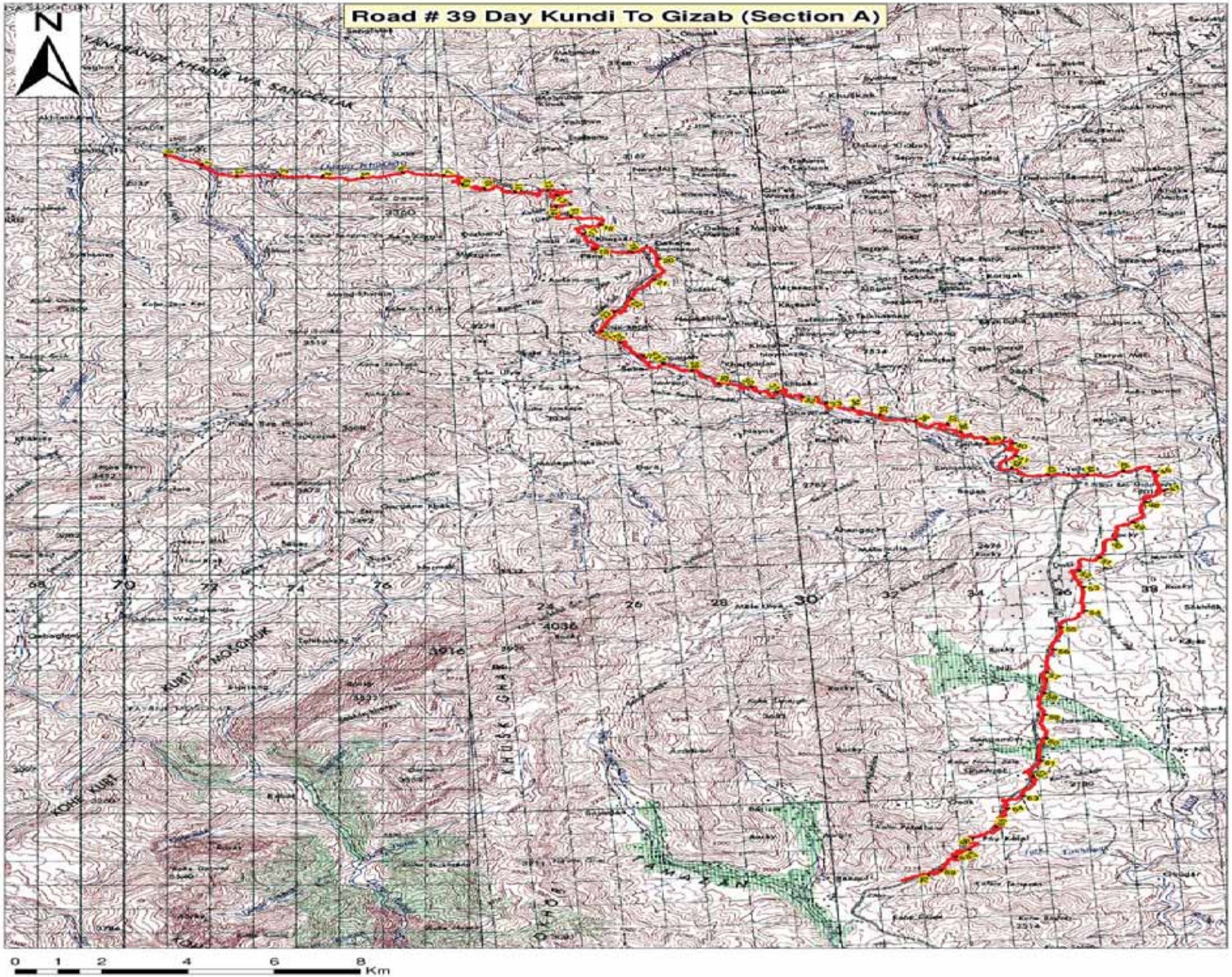
Road # 39 Day Kundi To Gizab (Section A)
N
0 1 2 4 6 8 Km

Road # 40 Kajran to To Day Kundi - Gizab Road (Section A)

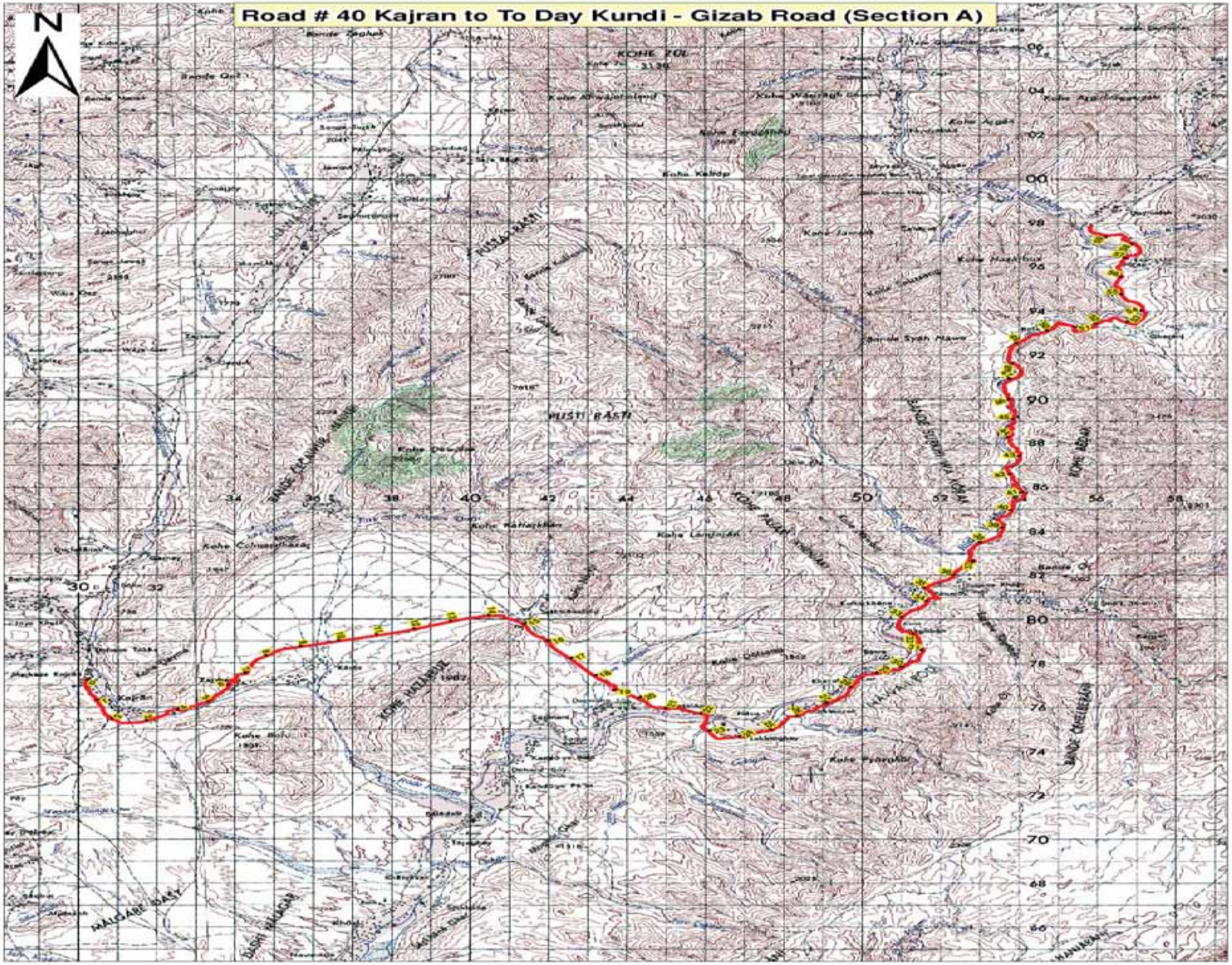

Appendix B: PROJECT PLAN INFORMATION

International Relief and Development Inc. (IRD)

STRATEGIC PROVINCIAL ROADS
SOUTHERN AND EASTERN AFGHANISTAN (SPR - SEA)
MUSA KHEL TO KHOST MELA ROAD PROJECT (#12)

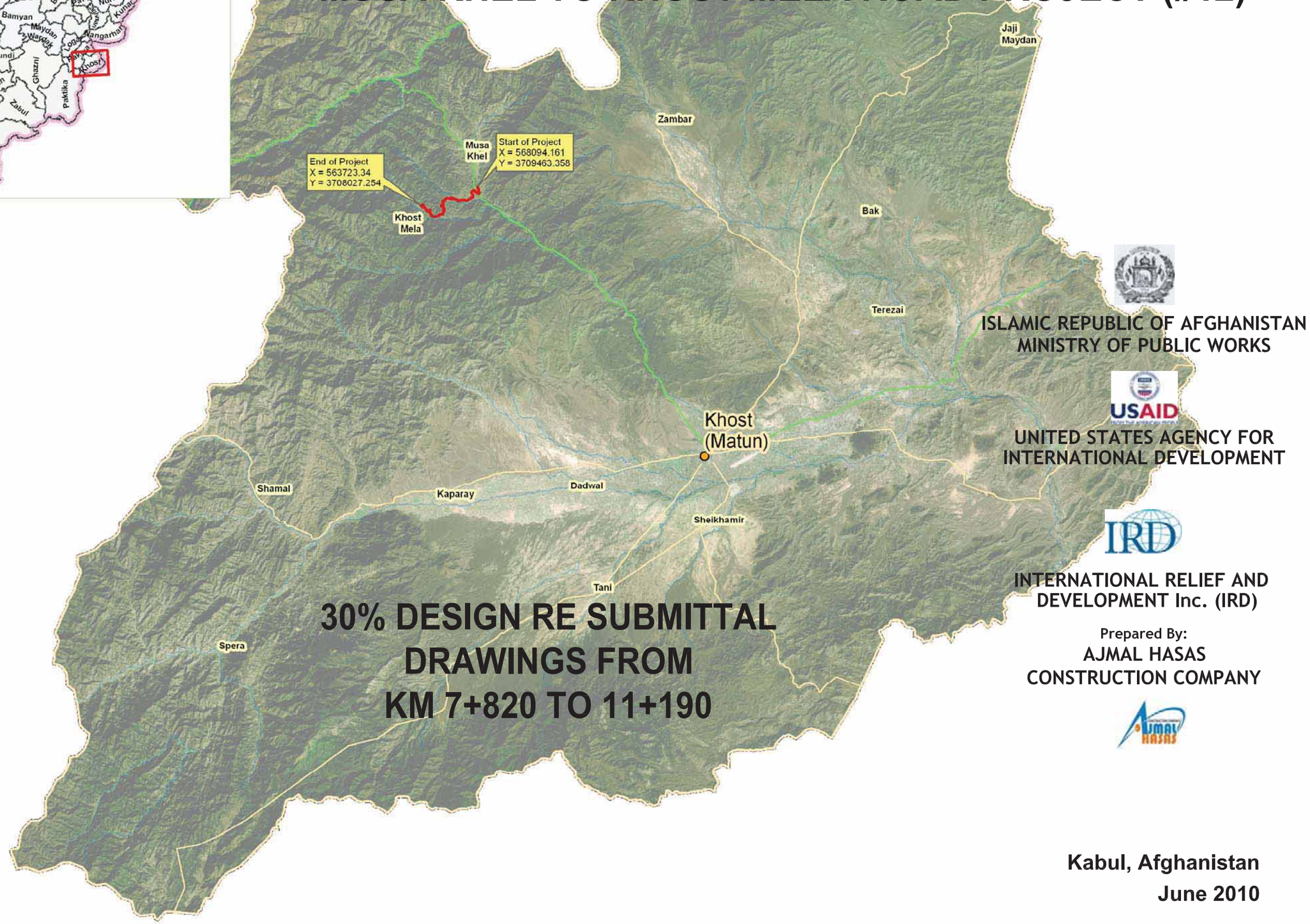

30% DESIGN RE SUBMITTAL DRAWINGS FROM KM 7+820 TO 11+190

ISLAMIC REPUBLIC OF AFGHANISTAN
MINISTRY OF PUBLIC WORKS

USAID
UNITED STATES AGENCY FOR INTERNATIONAL DEVELOPMENT

IRD
INTERNATIONAL RELIEF AND DEVELOPMENT Inc. (IRD)

Prepared By:
AJMAL HASAS
CONSTRUCTION COMPANY

Kabul, Afghanistan
June 2010

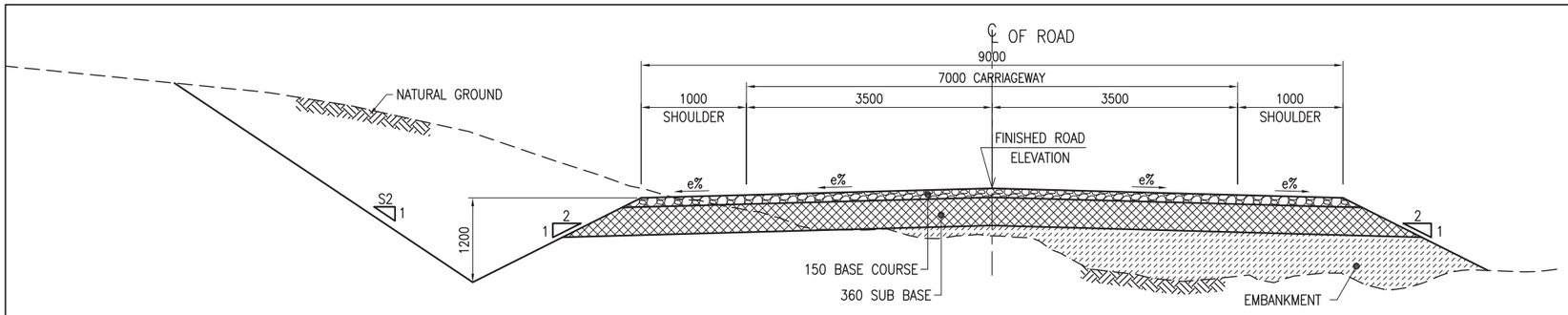

1 ROAD SECTION IN EARTHEN CUTS

SCALE NTS

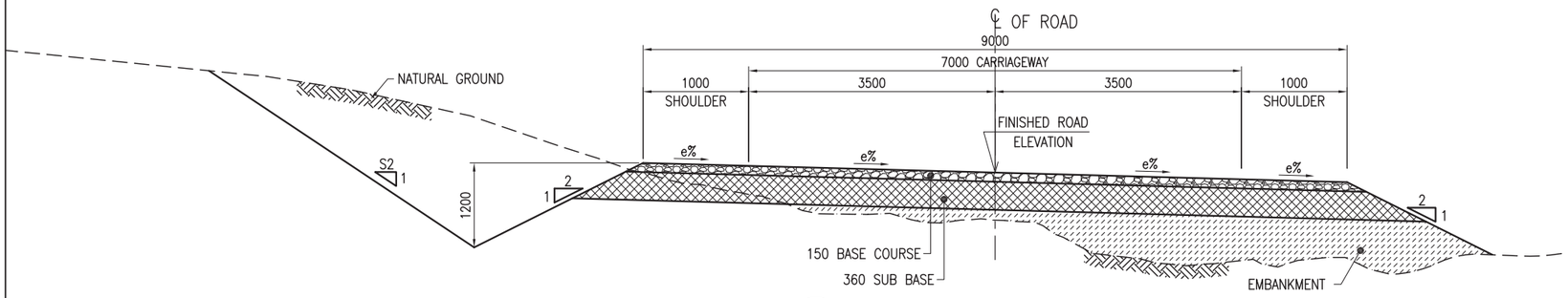

2 SUPERELEVATED ROAD SECTION

SCALE NTS

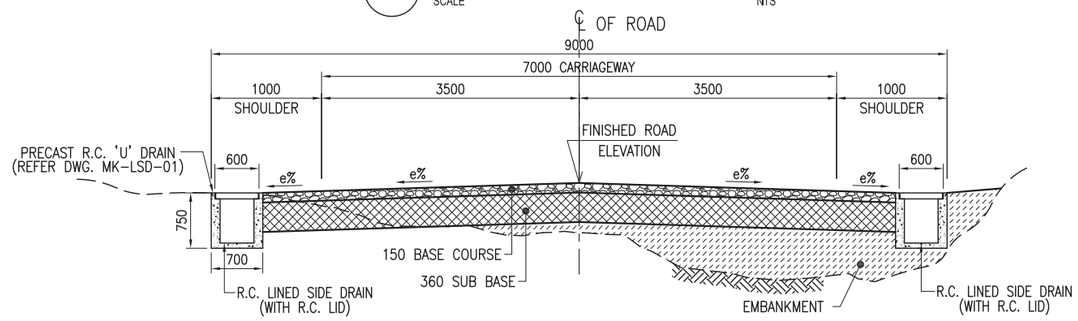

3 ROAD SECTION WITH U-DRAINS (INSIDE) IN URBAN AREA WITH LIMITED ROAD WIDTH

SCALE NTS

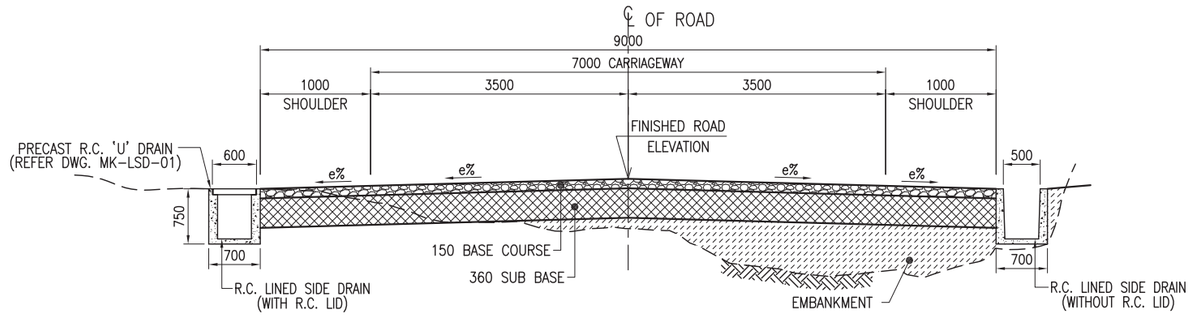

4 ROAD SECTION IN URBAN AREA WITH U-DRAINS (OUTSIDE)

SCALE NTS

TABLE OF CUT AND FILL SLOPES	
HEIGHT	SLOPES
FOR FILL ≤ 3.0m	2.0 H : 1.0 V
FOR FILL ≥ 3.0m	2.0 H : 1.0 V
FOR CUT (S2)	1.0 H : 1.0 V (SOIL MATERIALS) 1.0 H : 2.5 V (ALL TYPES OF ROCK)

150 BASE COURSE

(CBR MIN. ≥ 80, AASHTO T 193 AT 100% COMPACTION, AASHTO T-180) METHOD D.

360 SUB BASE

(CBR MIN. ≥ 25, AASHTO T 193 AT 100% COMPACTION, AASHTO T-180) METHOD D.

NOTE:

1. THE SUPERELEVATION RATE (e) IS SHOWN ON PLANS & PROFILES FOR EACH HORIZONTAL CURVE. THE SUPER ELEVATION IS SHOWN IN CROSS SECTIONS AT EVERY 20m INTERVALS
   SEE (DWG. NO. MK-RD-02) FOR THE METHOD OF APPLICATION.
2. UNSUITABLE MATERIALS SHALL BE REMOVED AS DIRECTED BY THE ENGINEER AND SHALL BE REPLACED WITH SUITABLE BACKFILL MATERIALS.
3. THE CONTRACTOR MAY SECURE APPROVAL FROM THE ENGINEER TO FLATTEN CUT SLOPES TO OBTAIN ADDITIONAL EMBANKMENT MATERIAL.
4. EXPOSED SUBGRADE SHALL BE COMPACTED TO AT LEAST 98% OF THE MAXIMUM MODIFIED PROCTOR DENSITY IN ACCORDANCE WITH AASHTO T180-95.
5. IN ROCK CUT SECTIONS, EXCAVATE 150mm BELOW SUBGRADE LEVEL AND REPLACE WITH TOPPING MATERIAL OR WITH OTHER SUITABLE MATERIAL (CBR ≥ 8).
6. REFER DWG NO. MK-LSD-01 FOR TYPICAL PLAN & SECTION OF LINED SIDE DRAIN.
7. ALL DIMENSIONS ARE IN MILLIMETERS UNLESS OTHERWISE SHOWN.

ISLAMIC REPUBLIC OF AFGHANISTAN AND UNITED STATES AGENCY FOR INTERNATIONAL DEVELOPMENT	STRATEGIC PROVINCIAL ROADS SOUTHERN AND EASTERN AFGHANISTAN INTERNATIONAL RELIEF & DEVELOPMENT, INC. AJMAL HASAS CONSTRUCTION COMPANY	MUSA KHEL TO KHOST MELA ROAD PROJECT # 12	SHEET CONTENTS	NAMES	SIGNATURE	DATE	SHEET NO.	REVISION	DATE
			ROAD CROSS SECTIONS	DESIGNED : ENG. AHMAD RAZAQ			MK-RD-01	30% DESIGN	MAR 10
				DRAWN : ENG. AHMAD RAZAQ				30% DESIGN	JUN 10
				CHECKED : ENG. ABDUL WAKEEL			SCALE:		
				APPROVED: IRD			AS SHOWN		

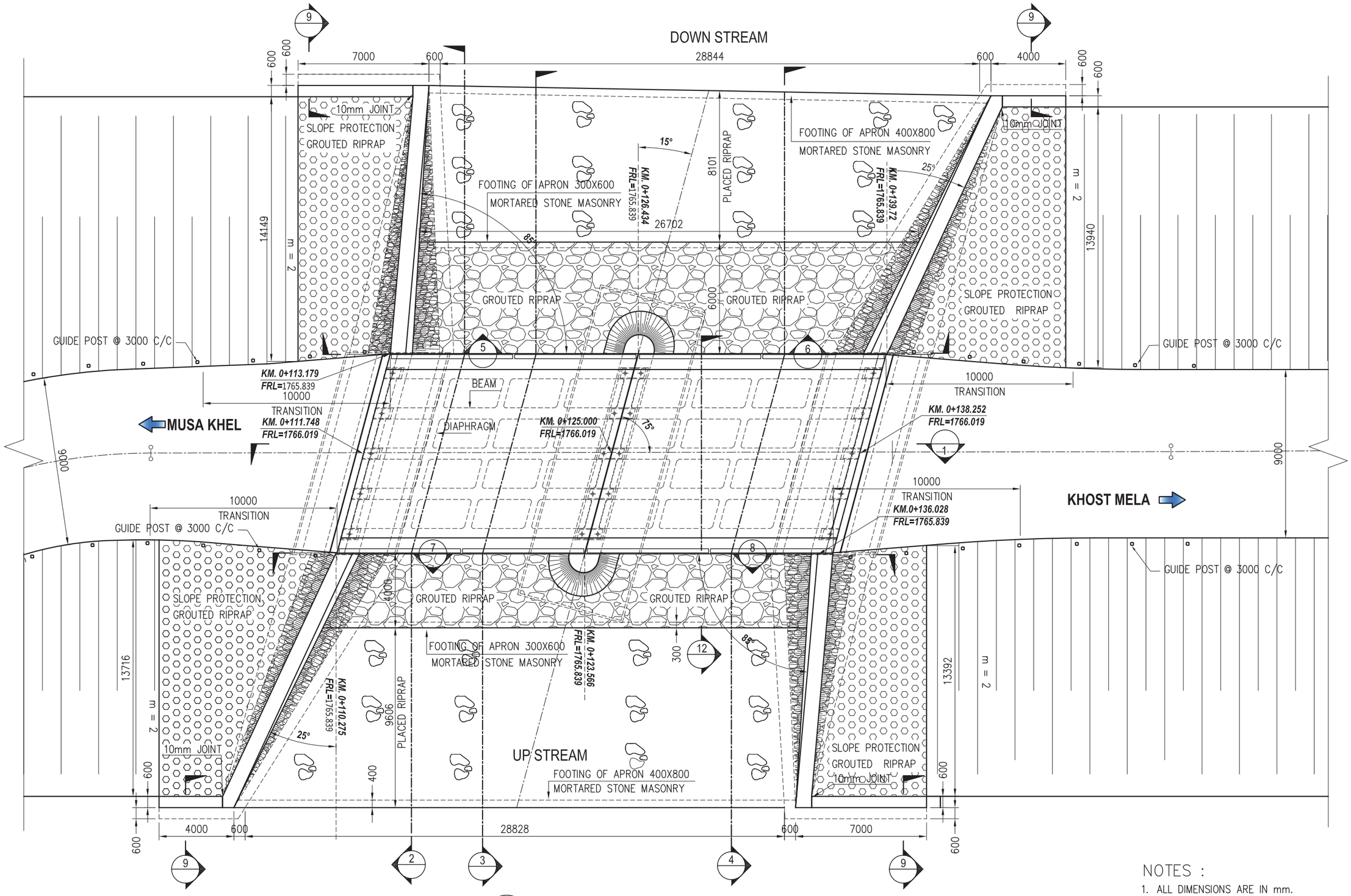

1 PLAN VIEW
SCALE 1:200

NOTES :

1. ALL DIMENSIONS ARE IN mm.
2. Δ1, Δ2 WILL BE ADJUSTED TO SUIT AS PER SITE CONDITION.
3. THE SLOPE OF ROAD EMBANKMENT m = 3 (ASSUMED).

ISLAMIC REPUBLIC OF AFGHANISTAN AND UNITED STATES AGENCY FOR INTERNATIONAL DEVELOPMENT	STRATEGIC PROVINCIAL ROADS SOUTHERN AND EASTERN AFGHANISTAN INTERNATIONAL RELIEF & DEVELOPMENT, INC. / AJMAL HASAS CONSTRUCTION COMPANY	MUSA KHEL TO KHOST MELA ROAD PROJECT # 12	SHEET CONTENTS	NAMES	SIGNATURE	DATE	SHEET NO.	REVISION	DATE
			PLAN VIEW OF R.C. BRIDGE AT Km 0+125	DESIGNED : ENG. AHMAD RAZAQ			MK-BRI-01 Sheet - 1/16	60% DESIGN	NOV 09
				DRAWN : ENG. AHMAD RAZAQ				60% DESIGN	FEB 010
				CHECKED : ENG. ABDUL WAKEEL			SCALE:	90% DESIGN	JUN 10
				APPROVED: IRD			AS SHOWN		

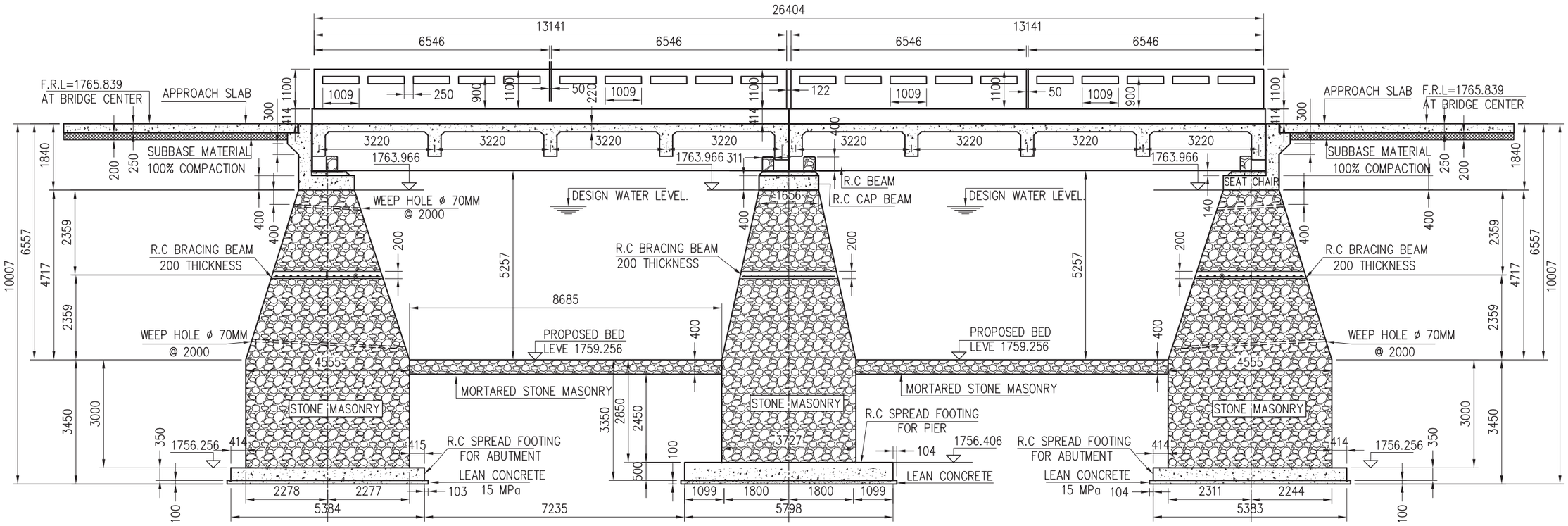

3 LONGITUDINAL SECTION 1-1

SCALE 1:120

NOTES :

1. ALL DIMENSIONS ARE IN mm.
2. CONCRETE CLASS M30 MPa UNLESS OTHERWISE SPECIFIED.
3 STONE MASONRY SHALL BE CLASS "A" , WITH MORTAR STRENGTH IS 15 MPa Min.

ISLAMIC REPUBLIC OF AFGHANISTAN AND UNITED STATES AGENCY FOR INTERNATIONAL DEVELOPMENT	STRATEGIC PROVINCIAL ROADS SOUTHERN AND EASTERN AFGHANISTAN INTERNATIONAL RELIEF & DEVELOPMENT, INC.	MUSA KHEL TO KHOST MELA ROAD PROJECT # 12	SHEET CONTENTS	NAMES	SIGNATURE	DATE	SHEET NO.	REVISION	DATE
	AJMAL HASAS CONSTRUCTION COMPANY		CROSS SECTION OF R.C BRIDGE AT Km 0+125	DESIGNED : ENG. AHMAD RAZAQ			MK-BRI-01 Sheet - 3/16	60% DESIGN	NOV 09
				DRAWN : ENG. AHMAD RAZAQ				60% DESIGN	FEB 010
				CHECKED : ENG. ABDUL WAKEEL			SCALE:	90% DESIGN	JUN 10
				APPROVED: IRD			AS SHOWN		

International Relief and Development Inc. (IRD)

STRATEGIC PROVINCIAL ROADS
SOUTHERN AND EASTERN AFGHANISTAN (SPR-SEA)

TANI TO SHEIKHAMIR ROAD PROJECT (#14)

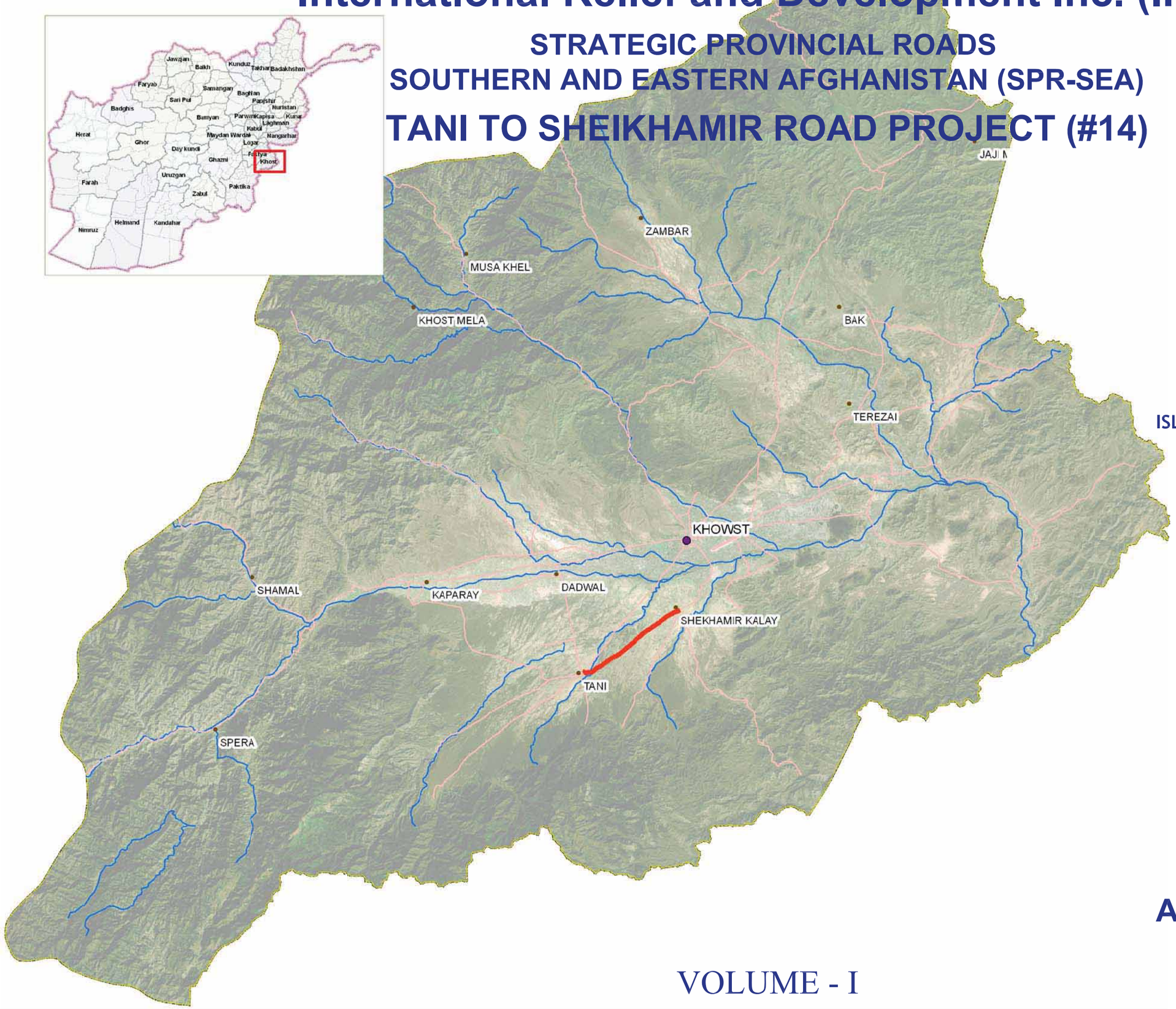

ISLAMIC REPUBLIC OF AFGHANISTAN
MINISTRY OF PUBLIC WORKS

USAID
UNITED STATES AGENCY FOR
INTERNATIONAL DEVELOPMENT

IRD
INTERNATIONAL RELIEF AND
DEVELOPMENT Inc. (IRD)

Prepared By:
IRD Design Department

As Built Drawings

Kabul, Afghanistan

October 2009

VOLUME - I

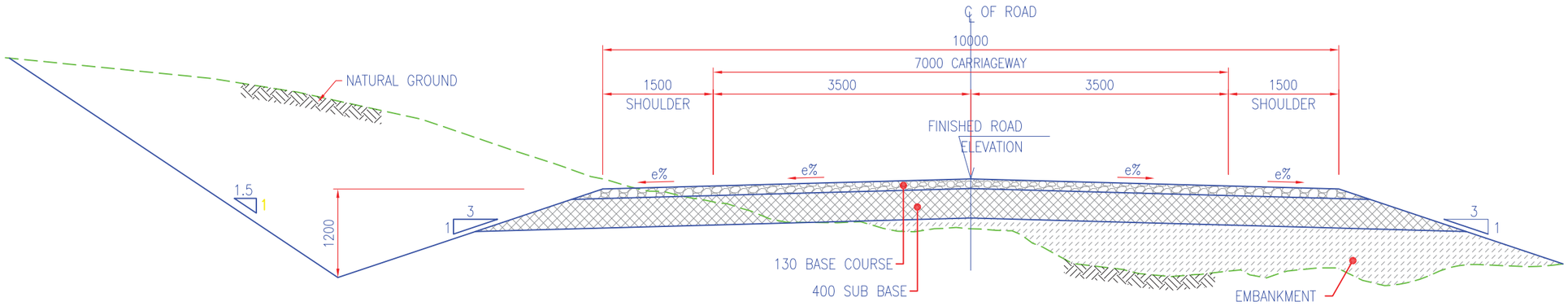

1 ROAD SECTION IN EARTHEN CUTS

SCALE NTS

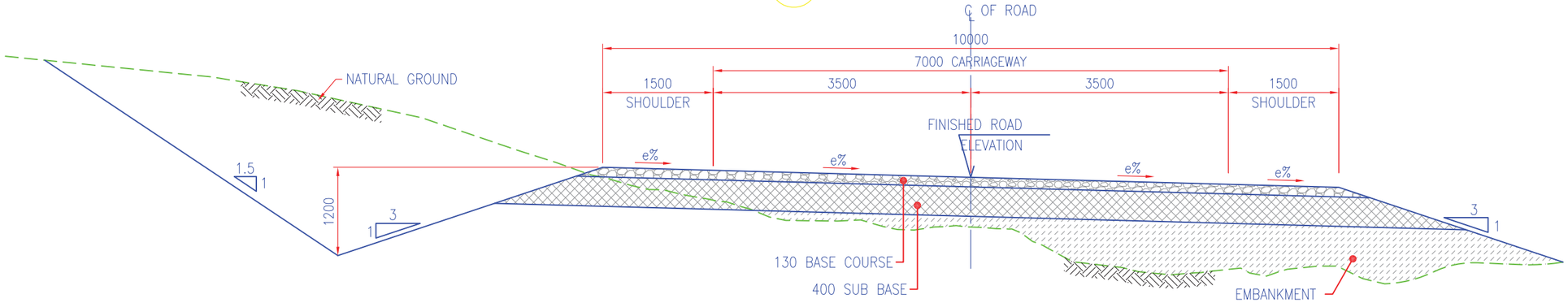

2 SUPERELEVATED ROAD SECTION

SCALE NTS

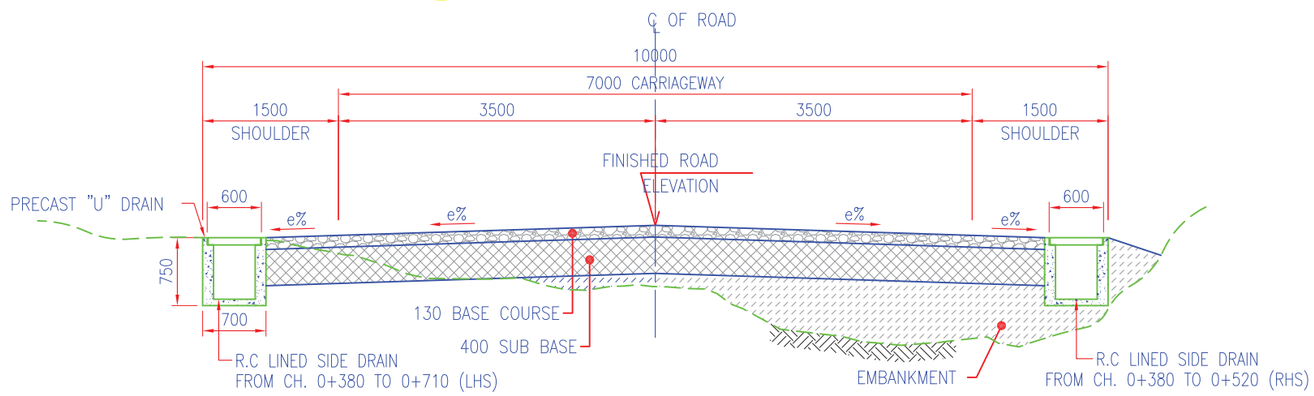

3 ROAD SECTION IN URBAN AREA WITH U-DRAINS

SCALE NTS

TABLE OF CUT AND FILL SLOPES	
HEIGHT	SLOPES
FOR FILL ≤ 3.0m	3.0 H : 1.0 V
FOR FILL ≥ 3.0m	2.0 H : 1.0 V
FOR CUT ≤ 2.0m	1.5 H : 1.0 V (SOIL MATERIALS)

130 BASE COURSE

(CBR MIN. ≥ 80, AASHTO T 193 AT 100% COMPACTION, AASHTO T-180) METHOD D.

400 SUB BASE

(CBR MIN. ≥ 25, AASHTO T 193 AT 100% COMPACTION, AASHTO T-180) METHOD D.

NOTE:

1. THE SUPERELEVATION RATE (e) IS SHOWN ON PLANS & PROFILES FOR EACH HORIZONTAL CURVE. THE SUPER ELEVATION IS SHOWN IN CROSS SECTIONS AT EVERY 20m INTERVALS
   SEE (DWG. NO. TS-RD-02) FOR THE METHOD OF APPLICATION.
2. UNSUITABLE MATERIALS SHALL BE REMOVED AS DIRECTED BY THE ENGINEER AND SHALL BE REPLACED WITH SUITABLE BACKFILL MATERIALS.
3. THE CONTRACTOR MAY SECURE APPROVAL FROM THE ENGINEER TO FLATTEN CUT SLOPES TO OBTAIN ADDITIONAL EMBANKMENT MATERIAL.
4. EXPOSED SUBGRADE SHALL BE COMPACTED TO AT LEAST 98% OF THE MAXIMUM MODIFIED PROCTOR DENSITY IN ACCORDANCE WITH AASHTO T180-95.
5. ON SECTIONS WITH ROCK SUBGRADE LEVEL (CUT), EXCAVATE 150mm BELOW SUBGRADE AND REPLACE WITH TOPPING MATERIAL OR WITH OTHER SUITABLE MATERIAL (CBR ≥ 8).
6. THE CROSS FALL OF THE ROAD WILL FOLLOW AT 20m INTERVALS. FOR CROSS SECTIONS REFER DWG. NO. TS-CS-01 TO TS-CS-30
7. ALL DIMENSIONS ARE IN MILLIMETERS UNLESS OTHERWISE SHOWN.

ISLAMIC REPUBLIC OF AFGHANISTAN AND UNITED STATES AGENCY FOR INTERNATIONAL DEVELOPMENT	STRATEGIC PROVINCIAL ROADS SOUTHERN AND EASTERN AFGHANISTAN INTERNATIONAL RELIEF & DEVELOPMENT, INC.	TANI TO SHEIKHAMIR ROAD ROAD PROJECT # 14	SHEET CONTENTS	NAMES	SIGNATURE	DATE	SHEET NO.	REVISION	DATE
			ROAD SECTIONS	DESIGNED : AVULA SRINIVASULA REDDY		JUL13,08	TS-RD-01	FIRST ISSUE	MAR 08
				DRAWN : PRAVEEN BHARADWAJ				As Built Drawings	Oct 09
				CHECKED : MY TAN NGUYEN			SCALE:		
				APPROVED: RICHARD LIEN			AS SHOWN		

International Relief and Development Inc. (IRD)

STRATEGIC PROVINCIAL ROADS
SOUTHERN AND EASTERN AFGHANISTAN (SPR - SEA)

MALISTAN TO JAGHURI ROAD PROJECT (#16)

003732

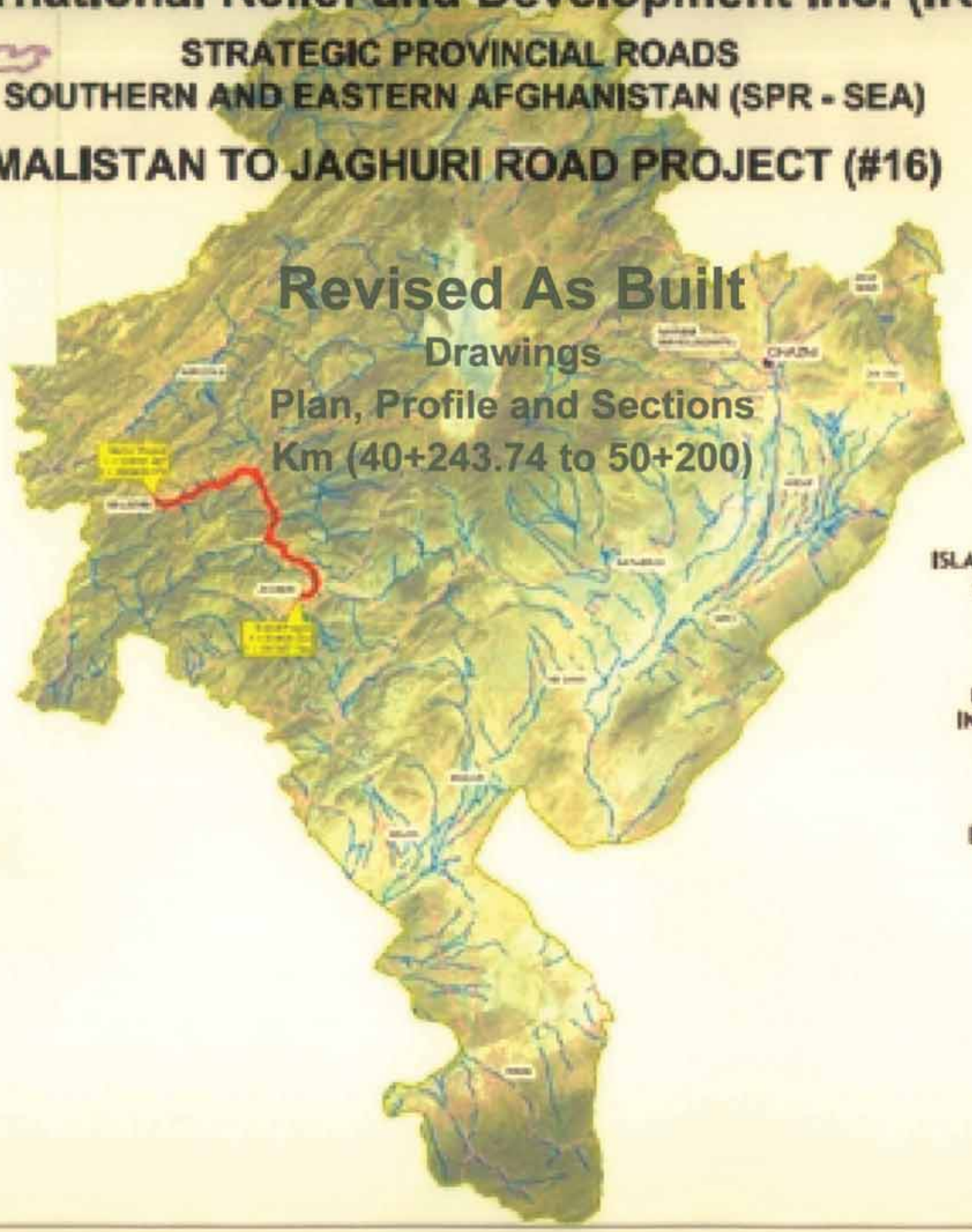

Revised As Built

Drawings

Plan, Profile and Sections

Km (40+243.74 to 50+200)

DISTRIBUTION STAMP				
IRD-SPR-SEA (KABUL) OFFICE				
ROAD # 1-20				
CM #				
DEPT	ACTION BY	INFORMATION	REQUEST COPY	INITIALS
COP				
DCOP				
DEPM				
DESIGN				
QC DEPT				
CONSTRUCTION				
SECURITY				
ADMINISTRATION				
COST CONTROL				
SCHEDULING				
ENVIRONMENTAL				
CONTRACTS				
FINANCE				
ORIGINAL FILED				

control

ISLAMIC REPUBLIC OF AFGHANISTAN
MINISTRY OF PUBLIC WORKS

UNITED STATES AGENCY FOR
INTERNATIONAL DEVELOPMENT

IRD

INTERNATIONAL RELIEF AND
DEVELOPMENT Inc. (IRD)

RECEIVED
12 JUL 2011
BY: H. Bashir

ALLAH NAZAR - NAQIBI
Deputy Area Manager
IRD - SPR

Kabul, Afghanistan

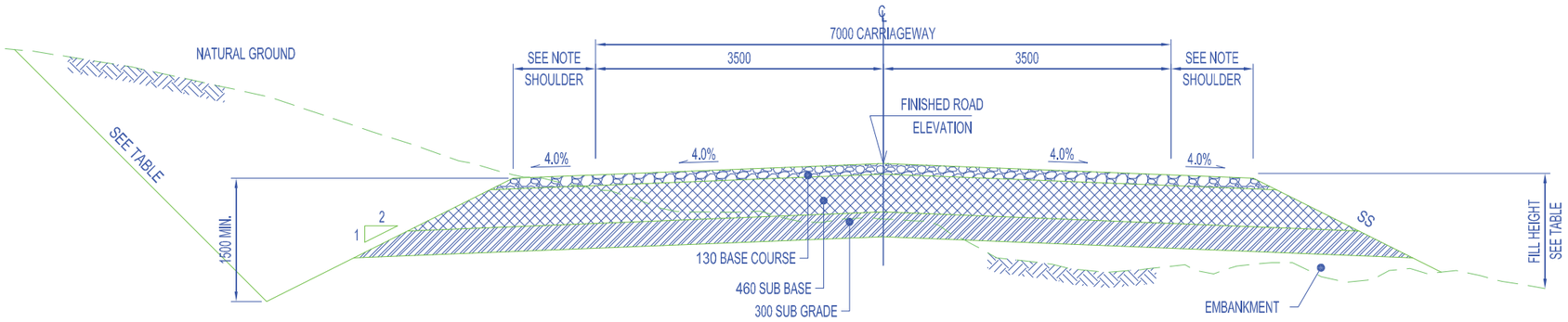

1 TYPICAL ROAD SECTION

SCALE NTS

TABLE OF CUT AND FILL SLOPES	
HEIGHT	SLOPES
FOR FILL ≤ 3.0m	3.0 H : 1.0 V
FOR FILL ≥ 3.0m	2.0 H : 1.0 V
FOR CUT ≤ 2.0m	1.5 H : 1.0 V (SOIL MATERIALS)
FOR CUT ≤ 2.0m	1.0 H : 2.5 V (ROCK MATERIALS)
FOR CUT ≥ 2.0m	1.0 H : 1.0 V (SOIL AND ROCK)
FOR CUT ≥ 12.0m	1.0 H : 1.5 V (UP SLOPE) 1.5 H : 1.0 V (DOWN SLOPE)

SHOULDER

FLAT TERRAIN	1.5M WIDE
ROLLING TERRAIN	1.0M WIDE
MOUNTAINOUS TERRAIN	0.5M WIDE

130 BASE COURSE

(CBR MIN. ≥ 80, AASHTO T 193 AT 100% COMPACTION, AASHTO T-180) METHOD D.

460 SUB BASE

(CBR MIN. ≥ 25, AASHTO T 193 AT 100% COMPACTION, AASHTO T-180) METHOD D.

300 SUB GRADE

1. (CBR MIN. ≥ 8, AASHTO T 193 AT 98% COMPACTION, AASHTO T-180) METHOD D.

2. WHEN THE CBR OF SUB GRADE WILL BE LESS THAN 8%, THEN IMPROVED SUB GRADE MATERIAL SHALL BE USED, WITH CBR MORE THAN 8%.

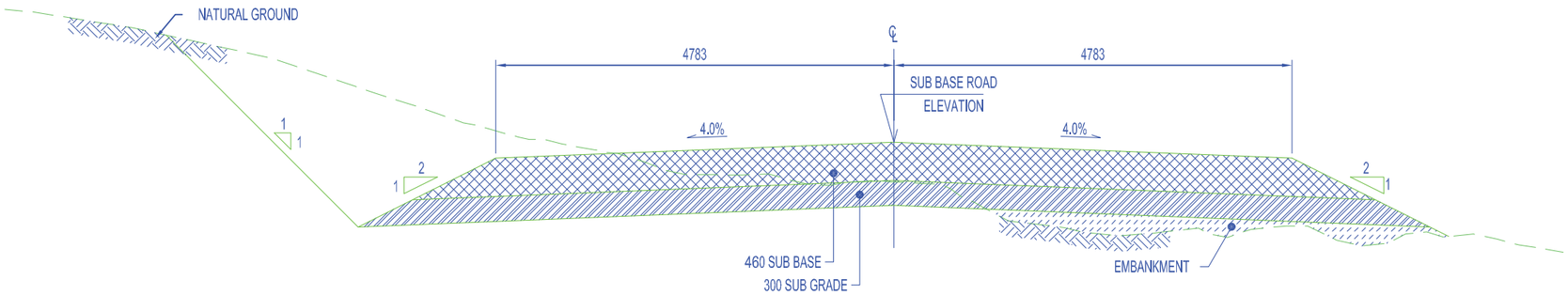

2 AS-BUILT TYPICAL ROAD SECTION STATION (50+200 TO 63+800)

SCALE NTS

ISLAMIC REPUBLIC OF AFGHANISTAN AND UNITED STATES AGENCY FOR INTERNATIONAL DEVELOPMENT	STRATEGIC PROVINCIAL ROADS SOUTHERN AND EASTERN AFGHANISTAN INTERNATIONAL RELIEF & DEVELOPMENT, INC.	Design built contractor COMBAT constraction company	PROJECT TITLE MALISTAN TO JAGHURI ROAD PROJECT # 16	SHEET CONTENTS	NAMES	SIGNATURE	DATE	SHEET NO.	REVISION	DATE
				Road Typical Section As Built Drawing	DESIGNED : Eng.Hamidullah "Sediqi"			01 of 01		25,Jun,2011
					DRAWN :					
					CHECKED : IRD			SCALE:		
					APPROVED: IRD			AS SHOWN		

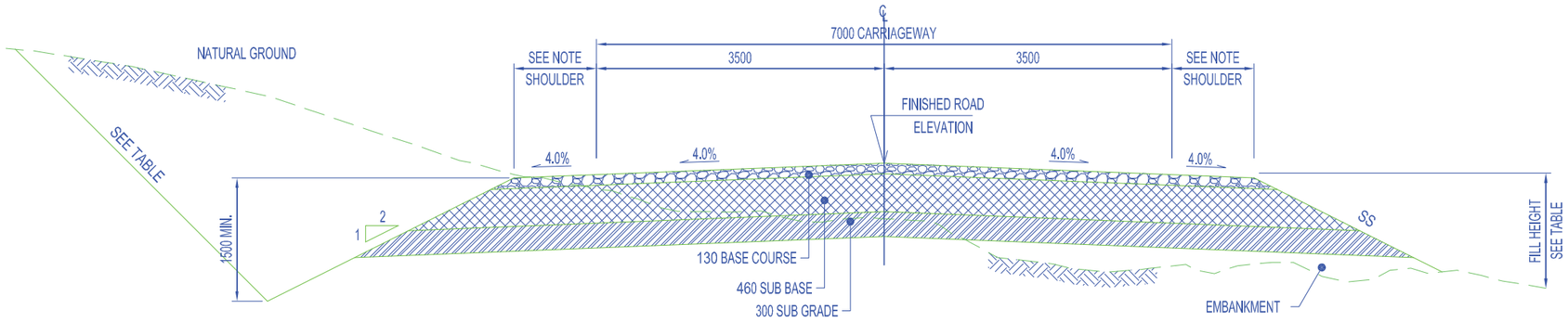

1 TYPICAL ROAD SECTION

SCALE NTS

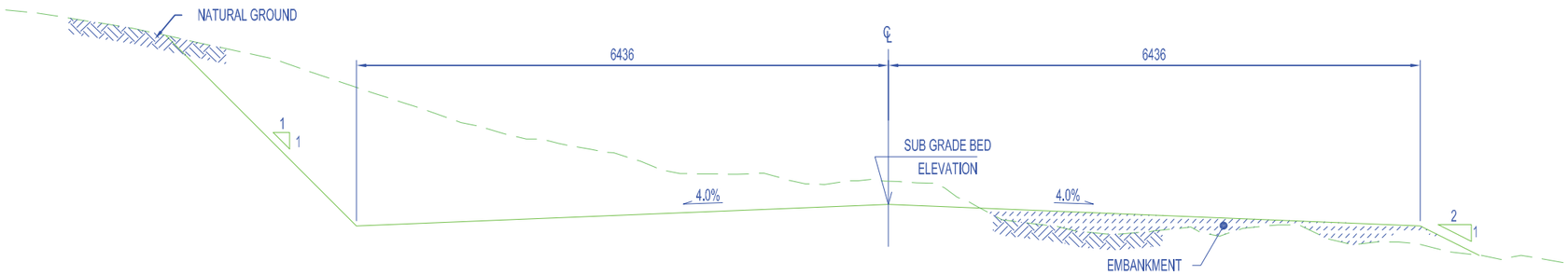

2 AS-BUILT TYPICAL ROAD SECTION STATION (40+243.74 to 50+200)

SCALE NTS

TABLE OF CUT AND FILL SLOPES	
HEIGHT	SLOPES
FOR FILL ≤ 3.0m	3.0 H : 1.0 V
FOR FILL ≥ 3.0m	2.0 H : 1.0 V
FOR CUT ≤ 2.0m	1.5 H : 1.0 V (SOIL MATERIALS)
FOR CUT ≤ 2.0m	1.0 H : 2.5 V (ROCK MATERIALS)
FOR CUT ≥ 2.0m	1.0 H : 1.0 V (SOIL AND ROCK)
FOR CUT ≥ 12.0m	1.0 H : 1.5 V (UP SLOPE) 1.5 H : 1.0 V (DOWN SLOPE)

SHOULDER

FLAT TERRAIN	1.5M WIDE
ROLLING TERRAIN	1.0M WIDE
MOUNTAINOUS TERRAIN	0.5M WIDE

130 BASE COURSE

(CBR MIN. ≥ 80, AASHTO T 193 AT 100% COMPACTION, AASHTO T-180) METHOD D.

460 SUB BASE

(CBR MIN. ≥ 25, AASHTO T 193 AT 100% COMPACTION, AASHTO T-180) METHOD D.

300 SUB GRADE

1. (CBR MIN. ≥ 8, AASHTO T 193 AT 98% COMPACTION, AASHTO T-180) METHOD D.
2. WHEN THE CBR OF SUB GRADE WILL BE LESS THAN 8%, THEN IMPROVED SUB GRADE MATERIAL SHALL BE USED, WITH CBR MORE THAN 8%.

ISLAMIC REPUBLIC OF AFGHANISTAN AND UNITED STATES AGENCY FOR INTERNATIONAL DEVELOPMENT	STRATEGIC PROVINCIAL ROADS SOUTHERN AND EASTERN AFGHANISTAN INTERNATIONAL RELIEF & DEVELOPMENT, INC.	Design built contractor COMBAT constraction company	PROJECT TITLE MALISTAN TO JAGHURI ROAD PROJECT # 16	SHEET CONTENTS	NAMES	SIGNATURE	DATE	SHEET NO.	REVISION	DATE
				Road Typical Section As Built Drawing	DESIGNED : Eng.Hamidullah "Sediqi"			01 of 01		25,Jun,2011
					DRAWN :					
					CHECKED : IRD			SCALE:		
					APPROVED: IRD			AS SHOWN		

Structure Schedule

Culverts:

S/N	CUL - Typ	Station	Type WxH	Skew	Length (m)	Bed Elevation			Remark
						Bed UP Streem	Bed Center	Bed Down Streem	
1	Typ-Cul	53+407	1 x 1	90°	9.526	2804.227	2804.179	2804.131	
2	Typ-Cul	53+580	1 x 1	90°	9.526	2790.850	2790.802	2790.754	
3	Typ-Cul	53+680	1 x 1	90°	9.526	1781.182	1781.134	1781.086	
4	Typ-Cul	53+780	1 x 1	90°	9.526	2774.917	2774.869	2774.821	
5	Typ-Cul	53+890	1 x 1	90°	9.526	2766.678	2766.630	2766.582	
6	Typ-Cul	54+016	1 x 1	90°	9.526	2756.381	2756.333	2756.285	
7	Typ-Cul	54+180	1 x 1	90°	9.526	2745.414	2745.366	2745.318	
8	Typ-Cul	54+355	1 x 1	90°	9.526	2730.166	2730.118	2730.070	
9	Typ-Cul	54+628	1 x 1	90°	9.526	2714.326	2714.278	2714.230	
10	Typ-Cul	54+740	2 x 1	90°	9.526	2705.107	2705.059	2705.011	
11	Typ-Cul	54+975	1 x 1	90°	9.526	2683.819	2683.771	2683.723	
12	Typ-Cul	55+030	1 x 1	90°	9.526	2680.447	2680.399	2680.351	
13	Typ-Cul	55+138	2 x 1	90°	9.526	2679.606	2679.558	2679.510	
14	Typ-Cul	55+300	1 x 1	90°	9.526	2674.263	2674.215	2674.167	
15	Typ-Cul	55+392	1 x 1	90°	9.526	2677.597	2677.549	2677.502	
16	Typ-Cul	55+503	1 x 1	90°	9.526	2681.544	2681.497	2681.449	
17	Typ-Cul	55+982	1 x 1	90°	9.526	2642.573	2642.525	2642.478	
18	Typ-Cul	56+022	1 x 1	90°	9.526	2640.392	2640.344	2640.296	
19	Typ-Cul	56+090	1 x 1	90°	9.526	2637.367	2637.320	2637.272	
20	Typ-Cul	56+290	2 x 1	90°	9.526	2615.321	2615.273	2615.225	
21	Typ-Cul	56+443	2x 1	90°	9.526	2616.129	2616.081	2616.033	
22	Typ-Cul	56+588	2 x 1	90°	9.526	2612.748	2612.701	2612.653	
23	Typ-Cul	56+685	1 x 1	90°	9.526	2607.416	2607.368	2607.320	
24	Typ-Cul	56+773	1 x 1	90°	9.526	2604.202	2604.154	2604.106	
25	Typ-Cul	57+050	2x 1	90°	9.526	2590.605	2590.557	2590.509	
26	Typ-Cul	57+415	2 x 1	90°	9.526	2556.316	2556.269	2556.221	
27	Typ-Cul	57+604	1 x 1	90°	9.526	2545.893	2545.846	2545.798	
28	Typ-Cul	57+700	2 x 1	90°	9.526	2539.946	2539.898	2539.850	
29	Typ-Cul	57+787	2 x 1	90°	9.526	2539.471	2539.424	2539.376	
30	Typ-Cul	58+016	1 x 1	90°	9.526	2526.490	2526.443	2526.395	
31	Typ-Cul	58+140	2x 1	90°	9.526	2517.169	2517.121	2517.073	
32	Typ-Cul	58+426	1 x 1	90°	9.526	2494.939	2494.892	2494.844	
33	Typ-Cul	59+037	1 x 1	90°	9.526	2450.524	2450.477	2450.429	
34	Typ-Cul	59+497	1 x 1	90°	9.526	2420.154	2420.106	2420.059	
35	Typ-Cul	59+657	1 x 1	90°	9.526	2412.555	2412.508	2412.460	
36	Typ-Cul	59+849	1 x 1	90°	9.526	2423.400	2423.353	2423.305	
37	Typ-Cul	60+428	1 x 1	90°	9.526	2429.727	2429.680	2429.632	
38	Typ-Cul	60+511	1 x 1	90°	9.526	2429.363	2429.316	2429.268	
39	Typ-Cul	60+687	1 x 1	90°	9.526	2427.990	2427.942	2427.895	
40	Typ-Cul	61+050	1 x 1	90°	9.526	2421.792	2421.744	2421.696	
41	Typ-Cul	61+195	1 x 1	90°	9.526	2419.636	2419.588	2419.540	
42	Typ-Cul	61+288	1 x 1	90°	9.526	2417.434	2417.387	2417.339	
43	Typ-Cul	61+944	1 x 1	90°	9.526	2407.402	2407.355	2407.307	
44	Typ-Cul	62+428	1 x 1	90°	9.526	2411.917	2411.870	2411.822	
45	Typ-Cul	63+432	1 x 1	90°	9.526	2460.650	2460.602	2460.554	
46	Typ-Cul	63+520	1 X1	90°	9.526	2462.028	2461.980	2461.932	

Causeway:

CAUSEWAY NO	STATION		LENGTH ,m	REMARKS
	START	END		
CW - 1	59+785	59+805	20	
CW - 2	59+913	59+933	20	
CW - 3	60+060	60+090	30	
CW - 4	60+236	60+266	30	
CW - 5	60+940	60+960	20	

ISLAMIC REPUBLIC OF AFGHANISTAN
AND
UNITED STATES AGENCY FOR
INTERNATIONAL DEVELOPMENT

STRATEGIC PROVINCIAL ROADS
SOUTHERN AND EASTERN AFGHANISTAN

INTERNATIONAL RELIEF & DEVELOPMENT, INC.

Design built contractor
COMBAT
construction company

PROJECT TITLE
MALISTAN TO JAGHURI
ROAD PROJECT # 16

SHEET CONTENTS	NAMES	SIGNATURE	DATE	SHEET NO.	REVISION	DATE
Structure list As Built Drawing	DESIGNED : Eng.Hamidullah "Sediqi"			01 of 01		25,Jun,2011
	DRAWN :					
	CHECKED : IRD			SCALE:		
	APPROVED: IRD			AS SHOWN		

003559

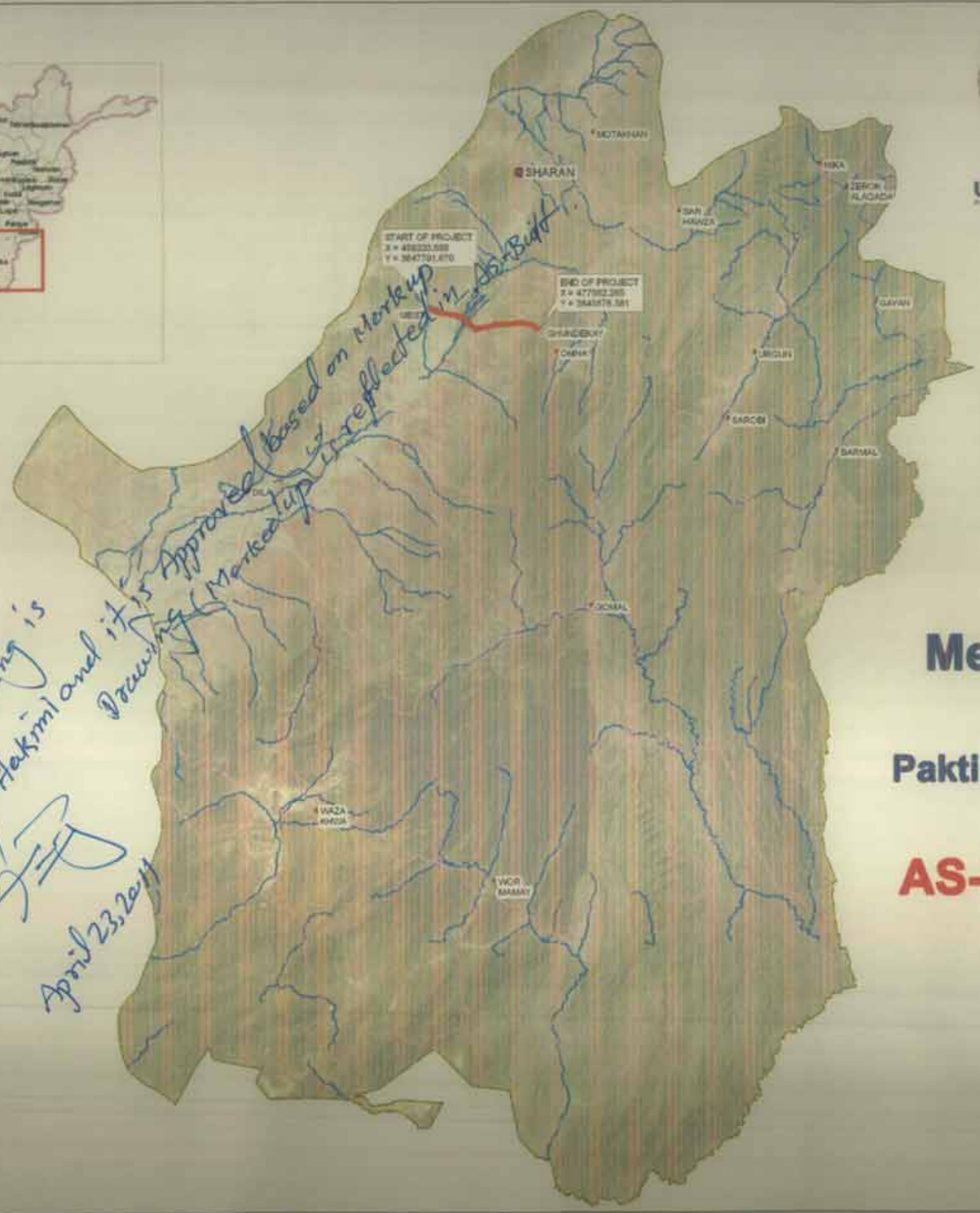

ISLAMIC REPUBLIC OF AFGHANISTAN
MINISTRY OF PUBLIC WORKS

USAID
UNITED STATES AGENCY FOR INTERNATIONAL DEVELOPMENT

IRD
INTERNATIONAL RELIEF AND DEVELOPEMENT

DORA CONSTRUCTION COMPANY, KABUL

Mest to Ghundekay Road Project

Paktika Province, Afghanistan

AS-BUILT DRAWINGS SUBMITTAL

October-2010

Approved based on Markup
Marked up is reflected in As-Built

AS-Built Drawing is reviewed by Hakimi and it is Approved Drawing (Marked up)
April 23, 2011

Doccontrol
RECEIVED
20 APR 2011
By: M. Bashir

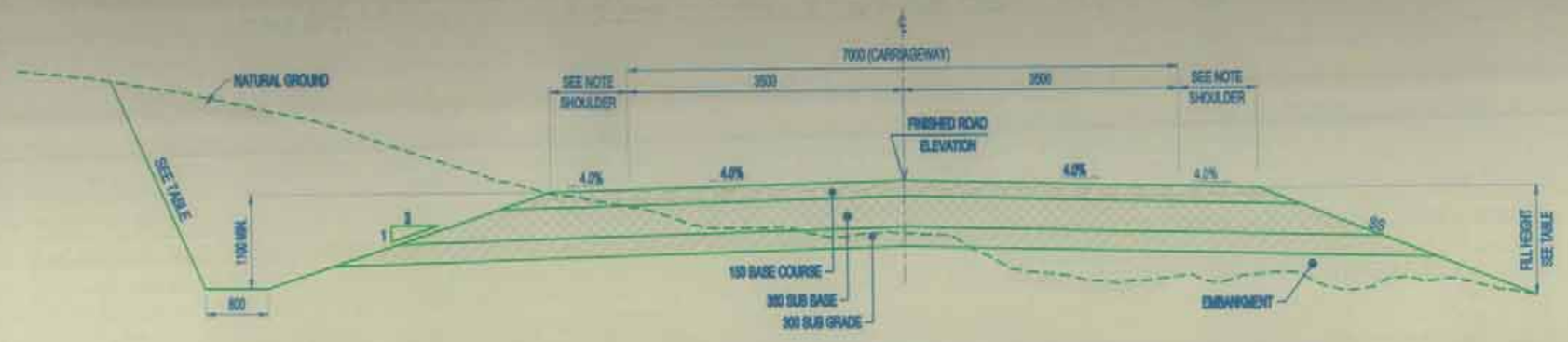

1 TYPICAL ROAD SECTION IN EARTHEN CUTS
SCALE NTS

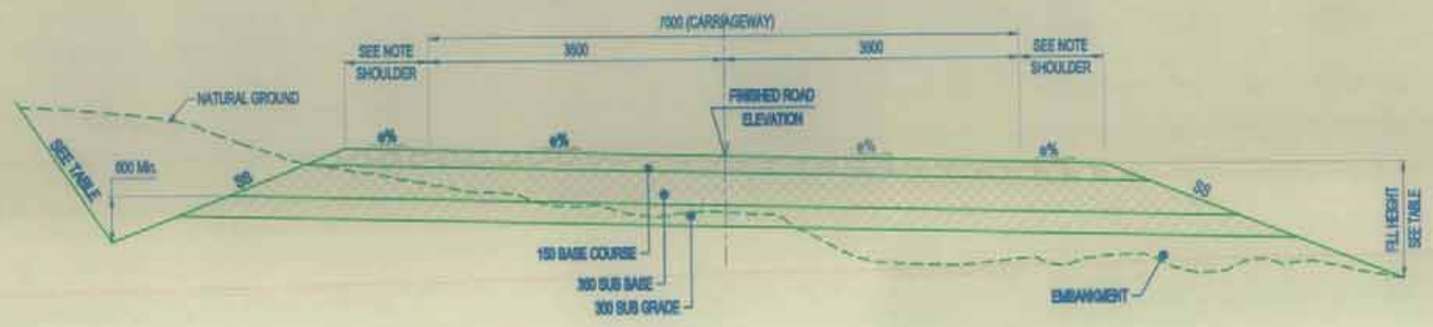

2 TYPICAL SUPERELEVATED ROAD SECTION
SCALE NTS

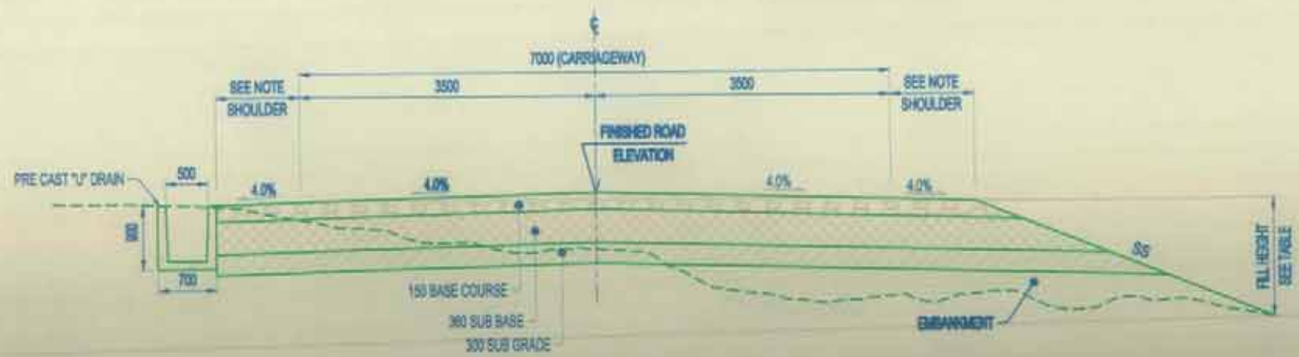

3 TYPICAL ROAD SECTION IN URBAN AREA
SCALE NTS

TABLE OF CUT AND FILL SLOPES	
HEIGHT	**SLOPES**
FOR FILL ≤ 3.0m	3.0 H : 1.0 V
FOR FILL ≥ 3.0m	2.0 H : 1.0 V
FOR CUT ≤ 2.0m	1.5 H : 1.0 V (SOIL MATERIALS)
FOR CUT ≤ 2.0m	1.0 H : 2.5 V (ROCK MATERIALS)
FOR CUT ≥ 2.0m	1.0 H : 2.5 V (SOIL AND ROCK)
SHOULDER	
FLAT AND ROLLING TERRAIN	1.5M WIDE
MOUNTAINOUS TERRAIN	1.0M WIDE

150 BASE COURSE
(CBR MIN. > 80, AASHTO T 193 AT 100% COMPACTION, AASHTO T-180) METHOD D.

360 SUB BASE
(CBR MIN. > 25, AASHTO T 193 AT 98% COMPACTION, AASHTO T-180) METHOD D.

300 SUB GRADE
(CBR MIN. > 8, AASHTO T 193 AT 98% COMPACTION, AASHTO T-180) METHOD D.

NOTE:

1. THE SUPERELEVATION RATE (e) IS SHOWN ON PLANS & PROFILES FOR EACH HORIZONTAL CURVE. SEE (DWG. NO. RD-03) FOR THE METHOD OF APPLICATION.
2. UNSUITABLE MATERIALS SHALL BE REMOVED AS DIRECTED BY THE ENGINEER AND SHALL BE REPLACED WITH SUITABLE BACKFILL MATERIALS.
3. THE CONTRACTOR MAY SECURE APPROVAL FROM THE ENGINEER TO FLATTEN CUT SLOPES TO OBTAIN ADDITIONAL EMBANKMENT MATERIAL.
4. CONSTRUCT STONE MASONRY LINED DITCH (DETAIL SEE DWG NO. LSD-01 WHERE THE LONGITUDINAL PROFILE OF ROAD IS 5.0% OR GREATER, OR AS DIRECTED BY THE ENGINEER. ON ROCK CUTS, DITCH SHOULD BE SHAPED AS TYPICAL SECTION NO. 4.
5. EXPOSED SUBGRADE SHALL BE COMPACTED TO AT LEAST 98% OF THE MAXIMUM MODIFIED PROCTOR DENSITY IN ACCORDANCE WITH AASHTO T180-95.
6. ON SECTIONS WITH ROCK SUBGRADE LEVEL (CUT) EXCAVATE 150mm BELOW SUBGRADE AND REPLACE WITH TOPPING MATERIAL OR WITH OTHER SUITABLE MATERIAL (CBR > 8).
7. ALL DIMENSIONS ARE IN MILLIMETERS UNLESS OTHERWISE SHOWN.

DORA Construction Company

ISLAMIC REPUBLIC OF AFGHANISTAN AND UNITED STATES AGENCY FOR INTERNATIONAL DEVELOPMENT	STRATEGIC PROVINCIAL ROADS SOUTHERN AND EASTERN AFGHANISTAN INTERNATIONAL RELIEF & DEVELOPMENT,INC DORA CONSTRUCTION COMPANY	MEST TO GHUNDEKAY ROAD NO. 18 PAKTIKA, AFGHANISTAN	SHEET CONTENTS	NAMES	SIGNATURE	DATE	SHEET NO.	REVISION	DATE
			TYPICAL ROAD CROSS SECTIONS	DESIGNED By:Mohibullah			RD-01	AS-BUILT SUBMITTAL	25.10.10
				DRAWN By:Qalamyar				60% SUBMITTAL	20.06.10
				CHECKED By: MATIN			SCALE:	30% SUBMITTAL	04.07.09
			AS-BUILT DRAWINGS	REVIEW AND APPROVED BY: IRD			AS SHOWN	60% SUBMITTAL	10.04.09

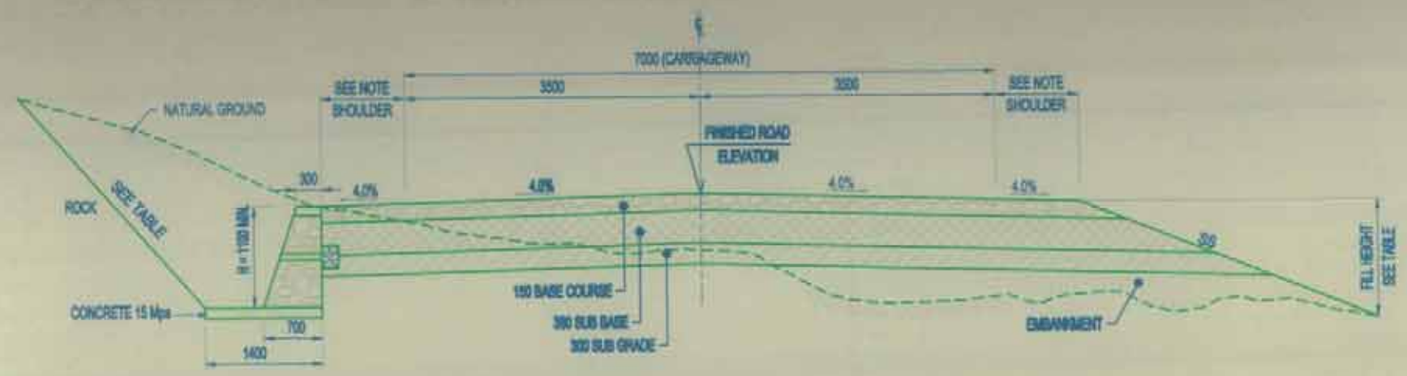

4 TYPICAL ROAD SECTION IN MOUNTAINOUS AREAS (ROCK CUT)
SCALE NTS

TABLE OF CUT AND FILL SLOPES	
HEIGHT	**SLOPES**
FOR FILL ≤ 3.0m	3.0 H : 1.0 V
FOR FILL ≥ 3.0m	2.0 H : 1.0 V
FOR CUT ≤ 2.0m	1.5 H : 1.0 V (SOIL MATERIALS)
FOR CUT ≤ 2.0m	1.0 H : 2.5 V (ROCK MATERIALS)
FOR CUT ≥ 2.0m	1.0 H : 2.5 V (SOIL AND ROCK)
SHOULDER	
FLAT AND ROLLING TERRAIN	1.5M WIDE
MOUNTAINOUS TERRAIN	1.0M WIDE

150 BASE COURSE
(CBR MIN. > 80, AASHTO T 193 AT 100% COMPACTION, AASHTO T-180) METHOD D.

360 SUB BASE
(CBR MIN. > 25, AASHTO T 193 AT 98% COMPACTION, AASHTO T-180) METHOD D.

300 SUB GRADE
(CBR MIN. > 8, AASHTO T 193 AT 98% COMPACTION, AASHTO T-180) METHOD D.

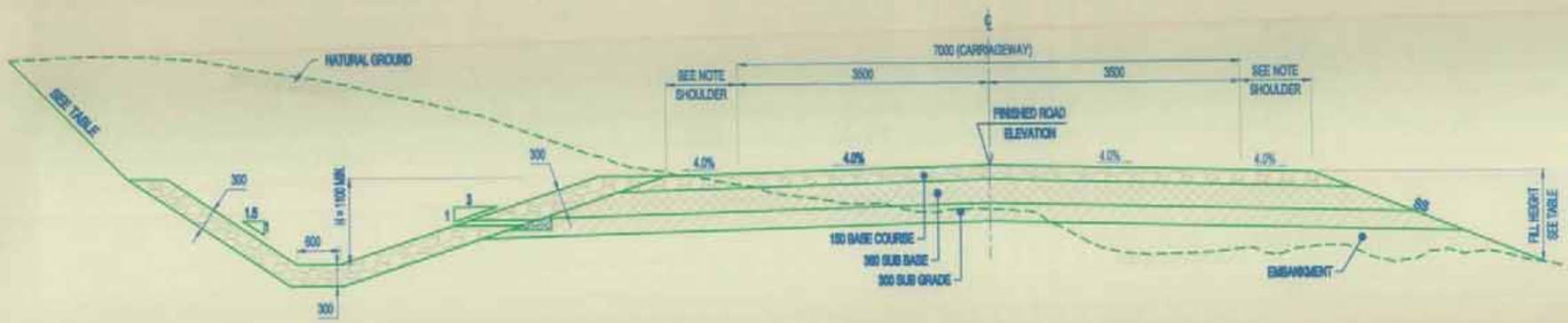

5 TYPICAL ROAD SECTION IN SOIL CUTS
SCALE NTS

NOTE

1. THE SUPERELEVATION RATE (e) IS SHOWN ON PLANS & PROFILES FOR EACH HORIZONTAL CURVE. SEE (DWG. NO. RD-03) FOR THE METHOD OF APPLICATION.
2. UNSUITABLE MATERIALS SHALL BE REMOVED AS DIRECTED BY THE ENGINEER AND SHALL BE REPLACED WITH SUITABLE BACKFILL MATERIALS.
3. THE CONTRACTOR MAY SECURE APPROVAL FROM THE ENGINEER TO FLATTEN CUT SLOPES TO OBTAIN ADDITIONAL EMBANKMENT MATERIAL.
4. CONSTRUCT STONE MASONRY LINED DITCH (DETAIL SEE DWG NO. LSD-01) WHERE THE LONGITUDINAL PROFILE OF ROAD IS 4.0% OR GREATER, OR AS DIRECTED BY THE ENGINEER. ON ROCK CUTS, DITCH SHOULD BE SHAPED AS TYPICAL SECTION NO. 4 .
5. EXPOSED SUBGRADE SHALL BE COMPACTED TO AT LEAST 98% OF THE MAXIMUM MODIFIED PROCTOR DENSITY IN ACCORDANCE WITH AASHTO T180-98.
6. ON SECTIONS WITH ROCK SUBGRADE LEVEL (CUT), EXCAVATE 150mm BELOW SUBGRADE AND REPLACE WITH TOPPING MATERIAL OR WITH OTHER SUITABLE MATERIAL (CBR > 8).
7. ALL DIMENSIONS ARE IN MILLIMETERS UNLESS OTHERWISE SHOWN.

ISLAMIC REPUBLIC OF AFGHANISTAN AND UNITED STATES AGENCY FOR INTERNATIONAL DEVELOPMENT	IRD STRATEGIC PROVINCIAL ROADS SOUTHERN AND EASTERN AFGHANISTAN INTERNATIONAL RELIEF & DEVELOPMENT,INC	MEST TO GHUNDEKAY ROAD NO. 16 PAKTIKA, AFGHANISTAN	SHEET CONTENTS	NAMES	SIGNATURE	DATE	SHEET NO.	REVISION	DATE
	DORA CONSTRUCTION COMPANY		TYPICAL ROAD CROSS SECTIONS	DESIGNED By:Mohibullah			RD-02	AS-BUILT SUBMITTAL	20.10.10
				DRAWN By:Qalamyar				100% PERMANENTAL	03.08.10
				CHECKED By: MATIN			SCALE:	50% SUBMITTAL	04.07.09
			AS-BUILT DRAWINGS	REVIEW AND APPROVED BY: IRD			AS SHOWN	30% SUBMITTAL	10.04.09

DRAINAGE STRUCTURES TABLE

CULVERTS

CULVERT NO.	STATION	TYPE (H x W, m)	INVERT ELE.	REMARKS
CUL-1	0+270	0.9 x 1	2177.00	NEW CONSTRUCTION
CUL-2	0+980	0.9 X 1	2167.29	NEW CONSTRUCTION
CUL-3	1+441	0.9 X 1	2163.25	NEW CONSTRUCTION
CUL-4	1+630	0.9 X 1	2161.00	NEW CONSTRUCTION
CUL-5	1+768	0.9 X 1	2159.64	NEW CONSTRUCTION
CUL-6	2+730	0.9 X 1	2148.81	NEW CONSTRUCTION
CUL-7	3+130	0.9 X 1	2143.94	NEW CONSTRUCTION
CUL-8	4+990	0.9 X 1	2132.57	NEW CONSTRUCTION
CUL-9	5+680	0.9X 1	2133.54	NEW CONSTRUCTION
CUL-10	6+200	0.9 X 1	2134.17	NEW CONSTRUCTION
CUL-11	6+330	0.9 X 1	2133.88	NEW CONSTRUCTION
CUL-12	6+730	0.9 X 1	2133.64	NEW CONSTRUCTION
CUL-13	6+980	0.9 X 1	2133.48	NEW CONSTRUCTION
CUL-14	7+100	0.9 X 1	2133.33	NEW CONSTRUCTION
CUL-15	7+400	3 X 4	2130.20	NEW CONSTRUCTION
CUL-16	8+300	0.9 X 1	2132.88	NEW CONSTRUCTION
CUL-17	8+475	0.9 X 1	2133.49	NEW CONSTRUCTION
CUL-18	8+600	0.9 X 1	2133.07	NEW CONSTRUCTION
CUL-19	9+110	0.9 X 1	2131.73	NEW CONSTRUCTION
CUL-20	9+710	0.9 X 1	2135.50	NEW CONSTRUCTION
CUL-21	10+844	0.9 X 1	2141.00	NEW CONSTRUCTION
CUL-22	10+920	0.9 X 1	2141.50	NEW CONSTRUCTION
CUL-23	12+150	0.9 X 1	2149.40	NEW CONSTRUCTION
CUL-24	14+200	0.9 X 1	2167.34	NEW CONSTRUCTION
CUL-25	15+635	0.9 X 1	2192.47	NEW CONSTRUCTION
CUL-26	16+170	0.9 X 1	2200.38	NEW CONSTRUCTION
CUL-27	17+780	0.9 X 1	2228.95	NEW CONSTRUCTION
CUL-28	17+934	0.9 X 1	2231.39	NEW CONSTRUCTION
CUL-29	18+155	0.9 X 1	2234.37	NEW CONSTRUCTION
CUL-30	18+300	0.9 X 1	2236.79	NEW CONSTRUCTION
CUL-31	19+785	1.5 X 2	2243.46	NEW CONSTRUCTION
CUL-32	19+150	0.9 X 1	2254.73	NEW CONSTRUCTION
CUL-33	19+250	1.2 X 1	2255.83	NEW CONSTRUCTION
CUL-34	19+550	0.9 X 1	2260.80	NEW CONSTRUCTION
CUL-35	19+900	1.5 X 2	2273.56	NEW CONSTRUCTION
CUL-36	20+048	1.5 X 2	2274.58	NEW CONSTRUCTION
CUL-37	20+450	1.5 X 2	2286.37	NEW CONSTRUCTION

CAUSEWAYS

CAUSEWAY NO.	STATION		LENGTH (m)	REMARKS
	START	END		
CW-1	4+700	4+840	140	NEW CONSTRUCTION
CW-2	7+550	7+570	20	NEW CONSTRUCTION
CW-3	9+905	9+955	50	NEW CONSTRUCTION
CW-4	11+970	11+990	20	NEW CONSTRUCTION
CW-5	19+370	19+430	60	NEW CONSTRUCTION

LINED SIDE DRAINS

LSD LOCATION	TYPE	STATION		LENGTH (m)	REMARKS
		START	END		
LHS	RC	5+820	5+900	80	NEW CONSTRUCTION
LHS	RC	5+960	6+200	240	NEW CONSTRUCTION
LHS	RC	6+260	6+400	140	NEW CONSTRUCTION
LHS	RC	6+560	6+730	170	NEW CONSTRUCTION
RHS	RC	6+800	6+890	90	NEW CONSTRUCTION
RHS	RC	7+560	7+610	50	NEW CONSTRUCTION
LHS	RC	7+560	7+610	50	NEW CONSTRUCTION
LHS	RC	8+400	8+500	100	NEW CONSTRUCTION
RHS	RC	8+400	8+500	100	NEW CONSTRUCTION
RHS	RC	9+040	9+180	140	NEW CONSTRUCTION

DORA Construction Company

ISLAMIC REPUBLIC OF AFGHANISTAN
AND
UNITED STATES AGENCY FOR INTERNATIONAL DEVELOPMENT

USAID

IRD

STRATEGIC PROVINCIAL ROADS
SOUTHERN AND EASTERN AFGHANISTAN
INTERNATIONAL RELIEF & DEVELOPMENT,INC

DORA CONSTRUCTION COMPANY

MEST TO GHUNDEKAY
ROAD NO. 18

SHEET CONTENTS	NAMES	SIGNATURE	DATE	SHEET NO.	REVISION	DATE
DRAINAGE STRUCTURES TABLE	DESIGNED By:Mohibullah			SS-01	AS BUILT SUBMITTAL	23.10.10
	DRAWN By:Qolamyar				100% SUBMITTAL	30.08.10
	CHECKED By: MATIN			SCALE:	60% SUBMITTAL	04.07.10
AS-BUILT DRAWINGS	REVIEW AND APPROVED BY IRD			NTS	30% SUBMITTAL	16.04.10

23/4/11

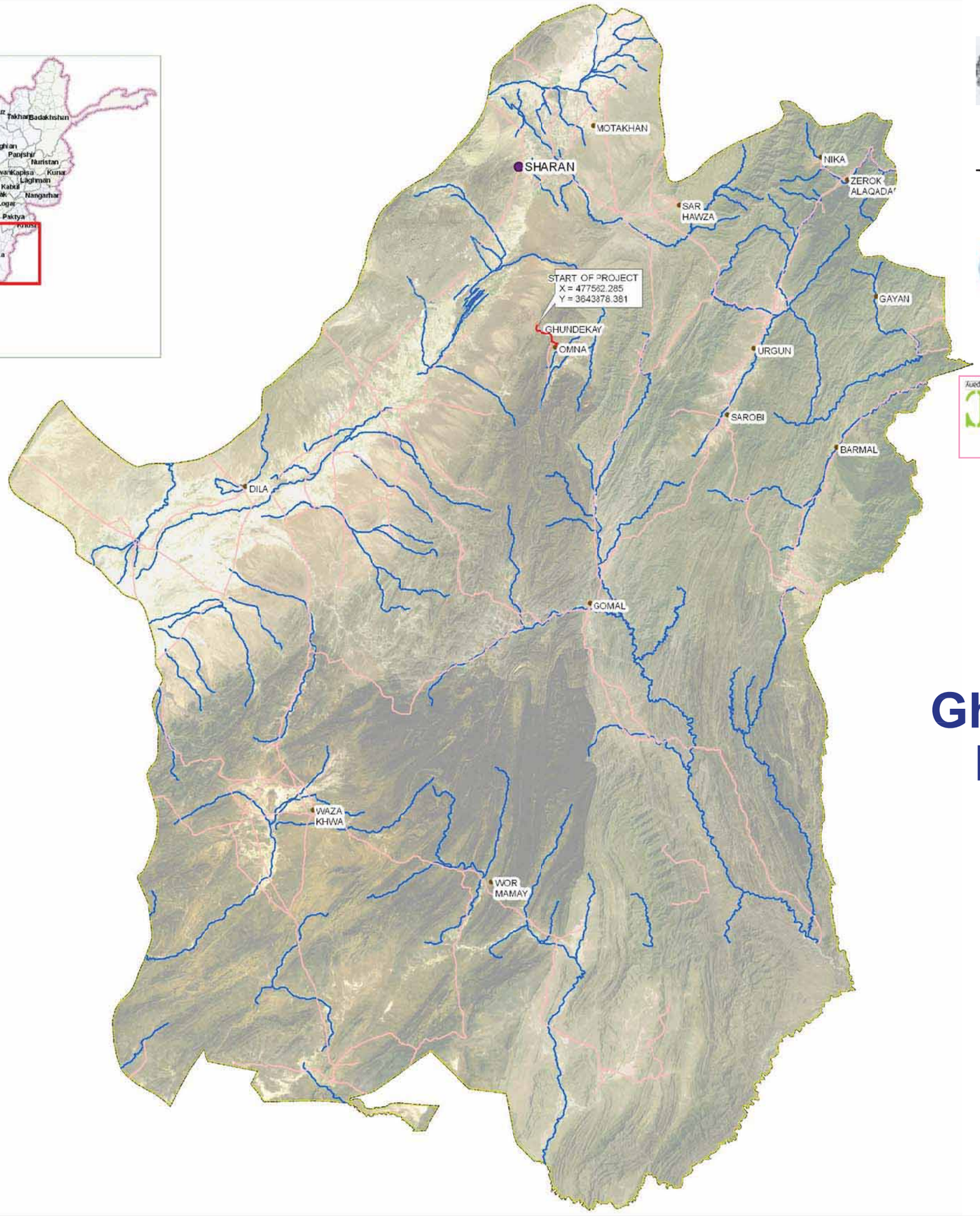

ISLAMIC REPUBLIC OF AFGHANISTAN
MINISTRY OF PUBLIC WORKS

UNITED STATES AGENCY FOR
INTERNATIONAL DEVELOPMENT

Strategic Provincial Roads
South and Eastren Afghanistan (SPR-SEA)

HAMEED KOCHAI
CONSTRUCTION
COMPANY, KABUL

Ghundekay To Omna Road Project

90% Design of Road #19 Drawings RD 0+000~7+030

Apr. 2009

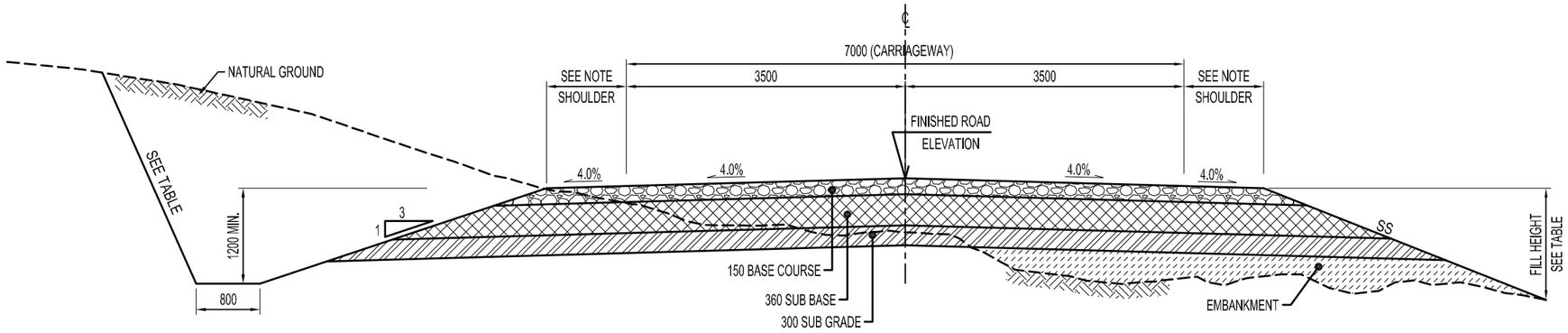

1 TYPICAL ROAD SECTION IN EARTHEN CUTS

SCALE NTS

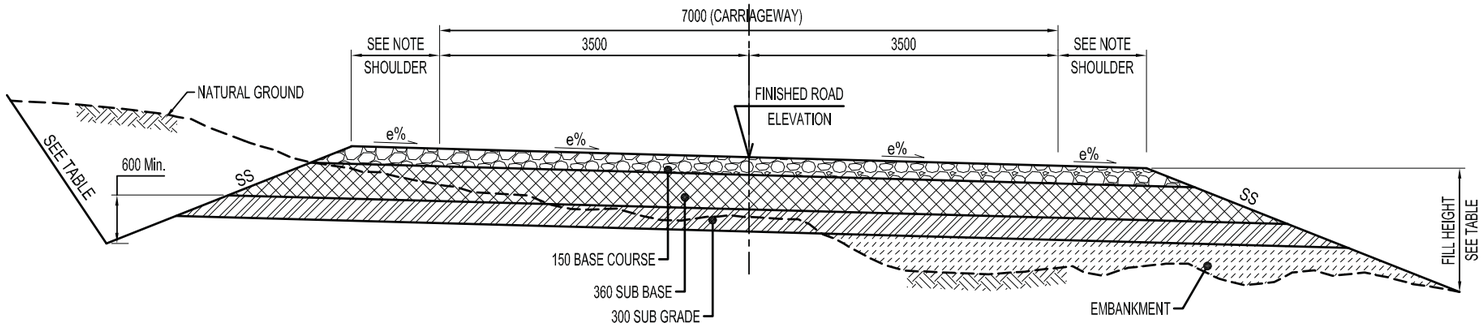

2 TYPICAL SUPERELEVATED ROAD SECTION

SCALE NTS

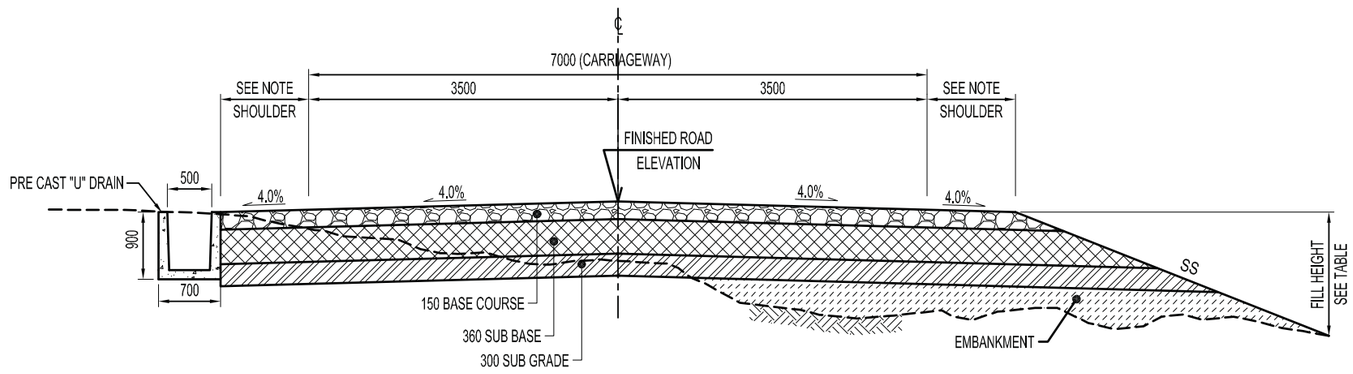

3 TYPICAL ROAD SECTION IN URBAN AREA

SCALE NTS

TABLE OF CUT AND FILL SLOPES	
HEIGHT	SLOPES
FOR FILL ≤ 3.0m	3.0 H : 1.0 V
FOR FILL ≥ 3.0m	2.0 H : 1.0 V
FOR CUT ≤ 2.0m	1.5 H : 1.0 V (SOIL MATERIALS)
FOR CUT ≤ 2.0m	1.0 H : 2.5 V (ROCK MATERIALS)
FOR CUT ≥ 2.0m	1.0 H : 2.5 V (SOIL AND ROCK)
SHOULDER	
FLAT AND ROLLING TERRAIN	1.5M WIDE
MOUNTAINOUS TERRAIN	1.0M WIDE

150 BASE COURSE
(CBR MIN. ≥ 80, AASHTO T 193 AT 100% COMPACTION, AASHTO T-180) METHOD D.

360 SUB BASE
(CBR MIN. ≥ 25, AASHTO T 193 AT 100% COMPACTION, AASHTO T-180) METHOD D.

300 SUB GRADE
(CBR MIN. ≥ 8, AASHTO T 193 AT 98% COMPACTION, AASHTO T-180) METHOD D.

NOTE:

1. THE SUPERELEVATION RATE (e) IS SHOWN ON PLANS & PROFILES FOR EACH HORIZONTAL CURVE. SEE (DWG. NO. LG-RD-03) FOR THE METHOD OF APPLICATION.
2. UNSUITABLE MATERIALS SHALL BE REMOVED AS DIRECTED BY THE ENGINEER AND SHALL BE REPLACED WITH SUITABLE BACKFILL MATERIALS.
3. THE CONTRACTOR MAY SECURE APPROVAL FROM THE ENGINEER TO FLATTEN CUT SLOPES TO OBTAIN ADDITIONAL EMBANKMENT MATERIAL.
4. CONSTRUCT STONE MASONRY LINED DITCH (DETAIL SEE DWG NO. LG-LSD-01) WHERE THE LONGITUDINAL PROFILE OF ROAD IS 4.0% OR GREATER, OR AS DIRECTED BY THE ENGINEER. ON ROCK CUTS, DITCH SHOULD BE SHAPED AS TYPICAL SECTION NO. 4 .
5. EXPOSED SUBGRADE SHALL BE COMPACTED TO AT LEAST 98% OF THE MAXIMUM MODIFIED PROCTOR DENSITY IN ACCORDANCE WITH AASHTO T180-95.
6. ON SECTIONS WITH ROCK SUBGRADE LEVEL (CUT), EXCAVATE 150mm BELOW SUBGRADE AND REPLACE WITH TOPPING MATERIAL OR WITH OTHER SUITABLE MATERIAL (CBR ≥ 8).
7. REFER TO DWG. NO. LG-SS-01 FOR LINED DITCH AND ROCK DITCH SCHEDULE.
8. ALL DIMENSIONS ARE IN MILLIMETERS UNLESS OTHERWISE SHOWN.

ISLAMIC REPUBLIC OF AFGHANISTAN AND UNITED STATES AGENCY FOR INTERNATIONAL DEVELOPMENT	IRD AFGHANISTAN INFRASTRUCTURE REHABILITATION PROGRAM Strategic Provincial Roads South and Eastern Afghanistan (SPR-SEA)	HAMEED KOCHAI CONSTRUCTION COMPANY KABUL , AFGHANISTAN	USAID SOUTH & EAST STRATEGIC PROVINCIAL ROADS	SHEET CONTENTS	NAMES		SIGNATURE	DATE	SHEET NO.	REVISION	DATE
			60% DESIGN SUBMISSION GHUNDAKEY TO OMNA ROAD PAKTIKA PROVINCE, AFGHANISTAN	TYPICAL ROAD SECTIONS	DESIGNED:	NAEEM		01 APRIL 09	GO-RD-01	1st ISSUE	DES. 08
					DRAWN :	ALI MUHAMMAD				2nd ISSUE	FEB. 09
					CHECKED :	NAEEM			SCALE:		
					APPROVED:				AS SHOWN		

International Relief and Development Inc. (IRD)

STRATEGIC PROVINCIAL ROADS
SOUTHERN AND EASTERN AFGHANISTAN (SPR-SEA)

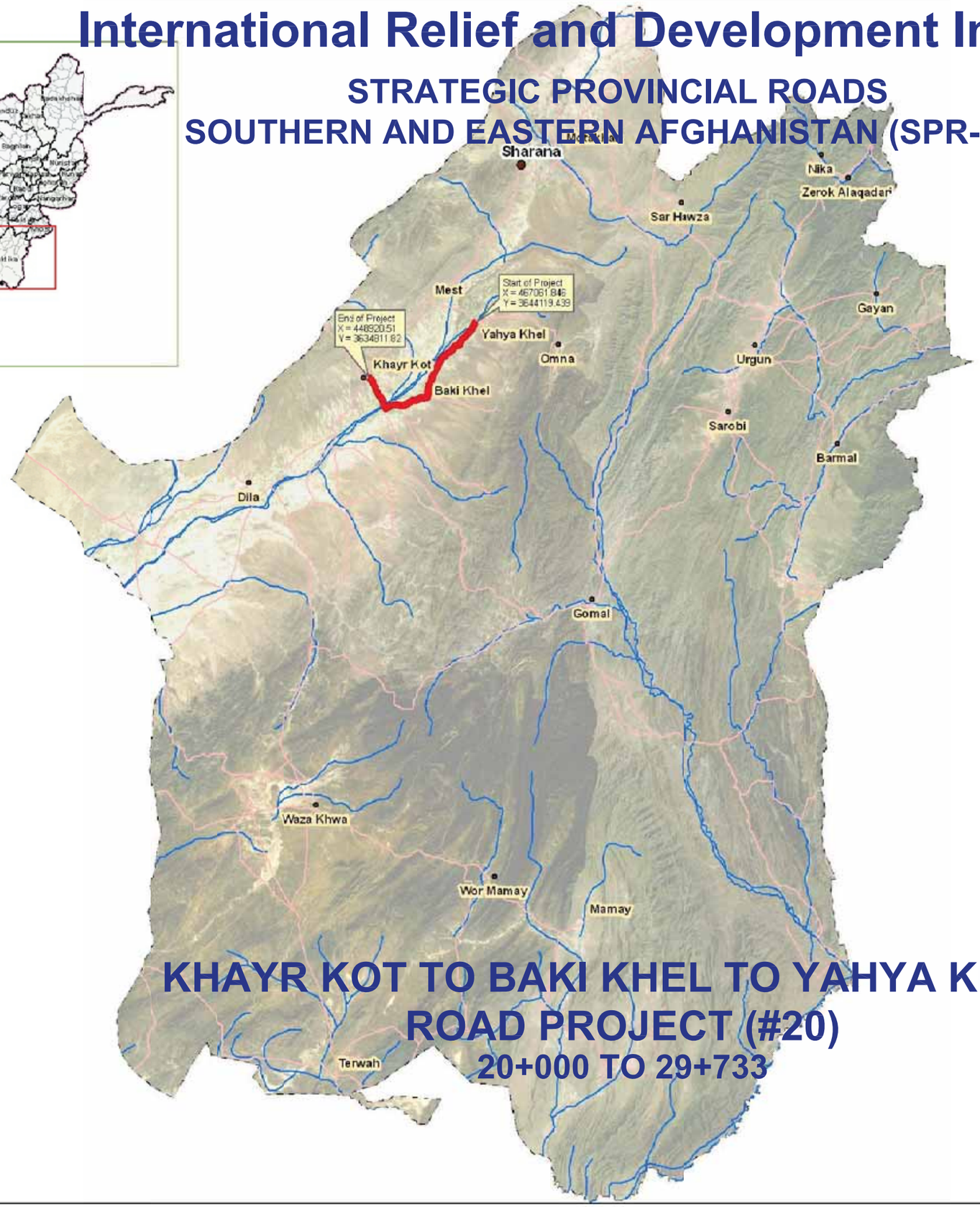

ISLAMIC REPUBLIC OF AFGHANISTAN
MINISTRY OF PUBLIC WORKS

USAID
UNITED STATES AGENCY FOR
INTERNATIONAL DEVELOPMENT

IRD
INTERNATIONAL RELIEF AND
DEVELOPMENT Inc. (IRD)

Prepared By:
BLUE KOHSAR JOINT VENTURE
Design Department

KHAYR KOT TO BAKI KHEL TO YAHYA KHEL
ROAD PROJECT (#20)
20+000 TO 29+733

90% Design Drawings

Kabul, Afghanistan

NOVEMBER 2009

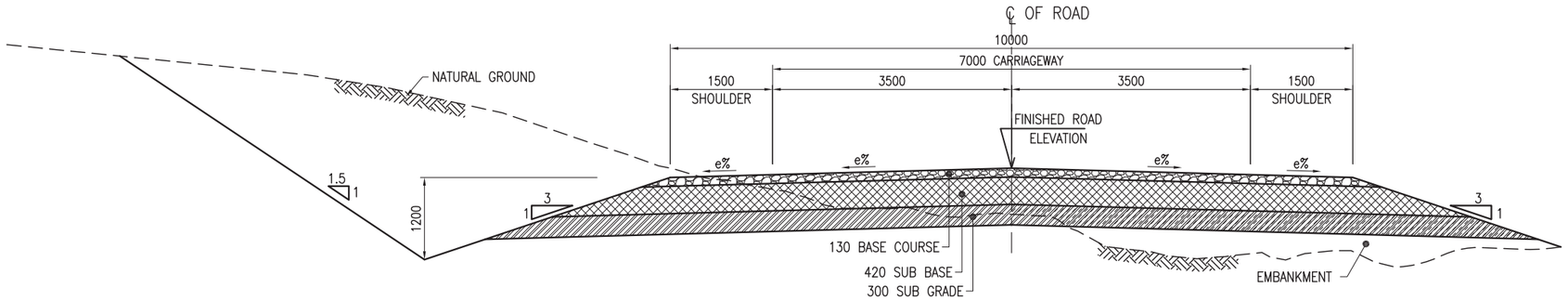

1 ROAD SECTION IN EARTHEN CUTS

SCALE NTS

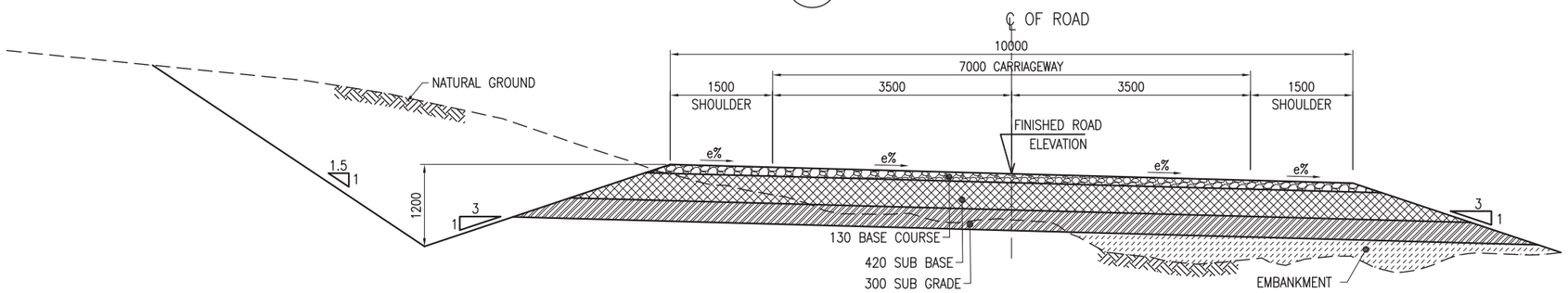

2 SUPERELEVATED ROAD SECTION

SCALE NTS

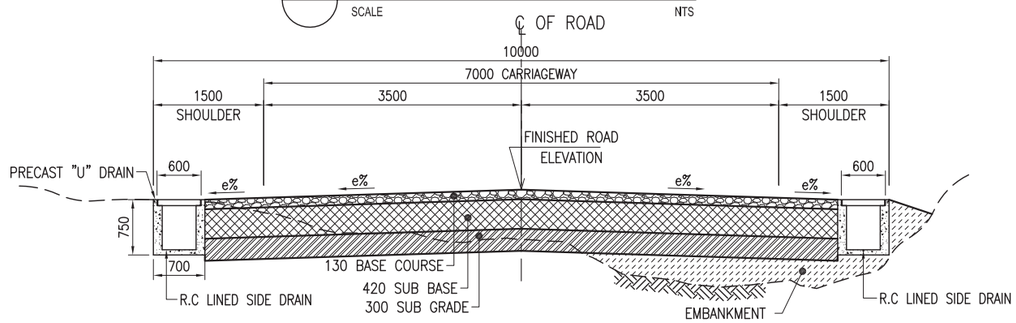

3 ROAD SECTION IN URBAN AREA WITH U-DRAINS (IN SIDE)

SCALE NTS

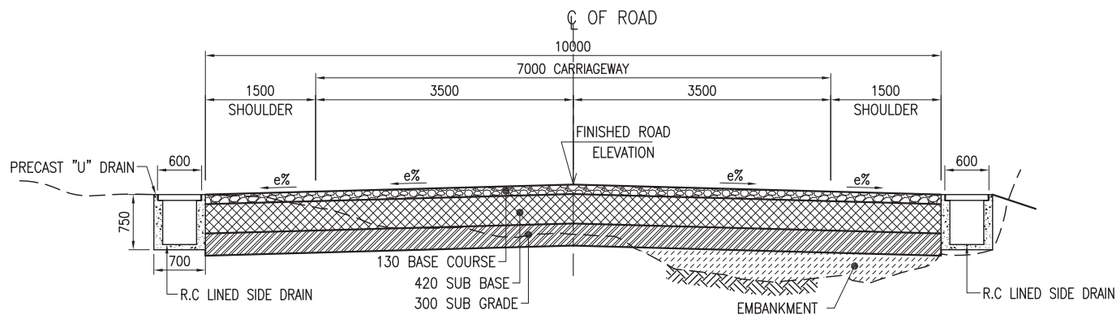

4 ROAD SECTION IN URBAN AREA WITH U-DRAINS (OUT SIDE)

SCALE NTS

TABLE OF CUT AND FILL SLOPES	
HEIGHT	SLOPES
FOR FILL ≤ 3.0m	3.0 H : 1.0 V
FOR FILL ≥ 3.0m	2.0 H : 1.0 V
FOR CUT ≤ 2.0m	1.5 H : 1.0 V (SOIL MATERIALS)

130 BASE COURSE
(CBR MIN. ≥ 80, AASHTO T 193 AT 100% COMPACTION, AASHTO T-180) METHOD D.

420 SUB BASE
(CBR MIN. ≥ 25, AASHTO T 193 AT 100% COMPACTION, AASHTO T-180) METHOD D.

300 SUB GRADE
(CBR MIN. ≥ 8, AASHTO T 193 AT 98% COMPACTION, AASHTO T-180) METHOD D.

NOTE:

1. THE SUPERELEVATION RATE (e) IS SHOWN ON PLANS & PROFILES FOR EACH HORIZONTAL CURVE. THE SUPER ELEVATION IS SHOWN IN CROSS SECTIONS AT EVERY 20m INTERVALS
   SEE (DWG. NO. TS-RD-02) FOR THE METHOD OF APPLICATION.
2. UNSUITABLE MATERIALS SHALL BE REMOVED AS DIRECTED BY THE ENGINEER AND SHALL BE REPLACED WITH SUITABLE BACKFILL MATERIALS.
3. THE CONTRACTOR MAY SECURE APPROVAL FROM THE ENGINEER TO FLATTEN CUT SLOPES TO OBTAIN ADDITIONAL EMBANKMENT MATERIAL.
4. EXPOSED SUBGRADE SHALL BE COMPACTED TO AT LEAST 98% OF THE MAXIMUM MODIFIED PROCTOR DENSITY IN ACCORDANCE WITH AASHTO T180-95.
5. ON SECTIONS WITH ROCK SUBGRADE LEVEL (CUT), EXCAVATE 150mm BELOW SUBGRADE AND REPLACE WITH TOPPING MATERIAL OR WITH OTHER SUITABLE MATERIAL (CBR ≥ 8).
6. THE CROSS FALL OF THE ROAD WILL FOLLOW AT 20m INTERVALS. FOR CROSS SECTIONS REFER DWG. NO. TS-CS-01 TO TS-CS-30
7. ALL DIMENSIONS ARE IN MILLIMETERS UNLESS OTHERWISE SHOWN.

ISLAMIC REPUBLIC OF AFGHANISTAN AND UNITED STATES AGENCY FOR INTERNATIONAL DEVELOPMENT	INTERNATIONAL RELIEF & DEVELOPMENT, INC. STRATEGIC PROVINCIAL ROADS PROJECT (SPR)	BLUE KOHSAR JOINT VENTURE CONSTRUCTION AND ROAD COMPANY	KHAYR KOT TO BACKI KHEL TO YAHYA KHEL ROAD ROAD PROJECT # 20	SHEET CONTENTS	NAMES	SIGNATURE	DATE	SHEET NO.	REVISION	DATE
				ROAD SECTIONS	DESIGNED : ENG.ABDULLAH RAHMANYAR		ARP16,09	KY-RD-01	60% DESIGN	APR 09
					DRAWN : ENG.ABDULLAH RAHMANYAR		NOV15,09		90% DESIGN	NOV 09
					CHECKED :			SCALE:		
					APPROVED:			AS SHOWN		

STRUCTURES SCHEDULE

CULVERT

CULVERT NO.	STATION	TYPE BOX (H x W, m)	LENGTH in 'm'	SKEW	INVERT LEVEL		REMARKS
					UP STREAM	DOWN STREAM	
CUL-1	7.7	0.9 x 1.0	10.600	-	2113.203	2113.213	NEW CONSTRUCTION
CUL-2	480.7	0.9 x 1.0	10.600	-	2108.910	2107.985	NEW CONSTRUCTION
CUL-3	1077.7	3.30 x 2.0	10.974	105	2100.508	2100.454	NEW CONSTRUCTION
CUL-4	1302.7	0.9 x 1.0	10.600	-	2101.268	2101.162	NEW CONSTRUCTION
CUL-5	1953.7	0.9 x 1.0	10.600	-	2096.452	2096.346	NEW CONSTRUCTION
CUL-6	2812.7	0.9 x 2.0	12.240	60	2089.620	2089.559	NEW CONSTRUCTION
CUL-7	3409.7	0.9 x 1.0	10.600	-	2084.837	2084.731	NEW CONSTRUCTION
CUL-8	4061.7	3.340 x 2.0	10.600	-	2077.780	2077.674	NEW CONSTRUCTION
CUL-9	4322.7	0.9 x 1.0	10.600	-	2078.805	2078.699	NEW CONSTRUCTION
CUL-10	4476.7	1.266 x 1.0	10.600	-	2077.927	2077.848	NEW CONSTRUCTION
CUL-11	4517.7	1.451 x 1.0	10.600	-	2077.594	2077.525	NEW CONSTRUCTION
CUL-12	4800.7	0.9 x 1.0	10.600	-	2076.067	2075.961	NEW CONSTRUCTION
CUL-13	5805.7	1.218 x 1.0	10.600	-	2067.726	2067.651	NEW CONSTRUCTION
CUL-14	6059.7	0.9 x 1.0	10.600	-	2071.753	2071.647	NEW CONSTRUCTION
CUL-15	6435.7	0.9 x 1.0	10.600	-	2071.830	2071.724	NEW CONSTRUCTION
CUL-16	6597.7	0.9 x 1.0	10.600	-	2072.120	2072.014	NEW CONSTRUCTION
CUL-17	6710.7	0.9 x 1.0	10.600	-	2072.522	2072.416	NEW CONSTRUCTION
CUL-18	6880.7	0.9 x 1.0	10.600	-	2073.127	2073.021	NEW CONSTRUCTION
CUL-19	7433.7	0.9 x 1.0	10.600	-	2074.714	2074.608	NEW CONSTRUCTION
CUL-20	7610.7	0.9 x 1.0	10.600	-	2175.009	2074.903	NEW CONSTRUCTION
CUL-21	7652.7	0.9 x 1.0	10.600	-	2175.079	2074.973	NEW CONSTRUCTION
CUL-22	8471.7	0.9 x 1.0	10.600	-	2077.959	2077.854	NEW CONSTRUCTION
CUL-23	8674.7	0.9 x 1.0	10.600	-	2078.736	2078.630	NEW CONSTRUCTION
CUL-24	8792.7	1.217 x 1.0	10.600	-	2079.241	2079.135	NEW CONSTRUCTION
CUL-25	8970.7	0.9 x 1.0	10.600	-	2079.869	2079.763	NEW CONSTRUCTION
CUL-26	9148.7	0.9 x 1.0	13.849	50°	2106.905	2106.799	NEW CONSTRUCTION
CUL-27	9289.7	1.536 x 1.0	10.600	-	2080.950	2080.886	NEW CONSTRUCTION
CUL-28	9824.7	1.324 x 1.0	10.600	-	2081.702	2081.626	NEW CONSTRUCTION
CUL-29	10133.7	1.324 x 1.0	10.600	-	2083.110	2083.034	NEW CONSTRUCTION
CUL-30	10174.7	0.9 x 1.0	10.600	-	2084.111	2084.005	NEW CONSTRUCTION
CUL-31	10607.7	0.9 x 1.0	10.600	-	2084.999	2084.886	NEW CONSTRUCTION
CUL-32	10787.7	1.277 x 1.0	10.600	-	2085.644	2085.566	NEW CONSTRUCTION
CUL-33	11002.7	2.450 x 2.0	10.600	-	2084.211	2084.060	NEW CONSTRUCTION
CUL-34	11592.7	1.132 x 1.0	10.600	-	2088.385	2088.299	NEW CONSTRUCTION
CUL-35	12202.7	0.9 x 1.0	10.600	-	2090.910	2090.968	NEW CONSTRUCTION
CUL-36	12584.7	0.9 x 1.0	10.600	-	2092.736	2092.880	NEW CONSTRUCTION
CUL-37	12980.7	2.837 x 1.0	12.240	60	2094.359	2093.998	NEW CONSTRUCTION
CUL-38	13085.7	0.9 x 1.0	10.600	-	2094.707	2094.601	NEW CONSTRUCTION
CUL-39	13270.7	0.9 x 1.0	10.600	-	2093.679	2093.573	NEW CONSTRUCTION
CUL-40	13667.7	0.9 x 1.0	10.600	-	2092.935	2092.781	NEW CONSTRUCTION

STRUCTURES SCHEDULE

CULVERT

CULVERT NO.	STATION	TYPE BOX (H x W, m)	LENGTH in 'm'	SKEW	INVERT LEVEL		REMARKS
					UP STREAM	DOWN STREAM	
CUL-41	14247.7	1.336 x 1.0	10.600	-	2094.220	2094.075	NEW CONSTRUCTION
CUL-42	15034.7	0.9 x 1.0	10.600	-	2097.965	2097.884	NEW CONSTRUCTION
CUL-43	15527.7	0.9 x 1.0	10.600	-	2099.992	2099.886	NEW CONSTRUCTION
CUL-44	16237.7	0.953 x 1.0	10.600	-	2101.435	2101.329	NEW CONSTRUCTION
CUL-45	16287.7	0.9 x 1.0	10.600	-	2101.148	2101.273	NEW CONSTRUCTION
CUL-46	16327.7	0.9 x 1.0	10.600	-	2100.962	2101.109	NEW CONSTRUCTION
CUL-47	16565.7	0.9 x 1.0	10.600	-	2102.635	2102.529	NEW CONSTRUCTION
CUL-48	16882.2	0.9 x 1.0	10.600	-	2103.103	2102.997	NEW CONSTRUCTION
CUL-49	17288.2	0.9 x 1.0	10.600	-	2102.828	2102.722	NEW CONSTRUCTION
CUL-50	17799.7	0.9 x 1.0	10.600	-	2103.640	2103.534	NEW CONSTRUCTION
CUL-51	17937	1.218 x 1.0	10.600	-	2103.762	2103.847	NEW CONSTRUCTION
CUL-52	18017.7	0.977 x 1.0	10.600	-	2103.948	2103.852	NEW CONSTRUCTION
CUL-53	18195.7	0.9 x 1.0	10.600	-	2104.001	2103.895	NEW CONSTRUCTION
CUL-54	19122.2	0.947 x 1.0	10.600	-	2106.976	2106.870	NEW CONSTRUCTION
CUL-55	19242.7	0.9 x 1.0	10.600	-	2106.905	2106.799	NEW CONSTRUCTION
CUL-56	19319.2	0.9 x 1.0	10.600	-	2106.796	2106.690	NEW CONSTRUCTION
CUL-57	19344.7	0.9 x 1.0	10.600	-	2106.761	2106.655	NEW CONSTRUCTION
CUL-58	19398.7	0.9 x 1.0	10.600	-	2106.684	2106.578	NEW CONSTRUCTION
CUL-59	19475.2	0.9 x 1.0	10.600	-	2106.575	2106.469	NEW CONSTRUCTION
CUL-60	19495.2	0.9 x 1.0	10.600	-	2106.547	2106.441	NEW CONSTRUCTION
CUL-61	19515.7	0.9 x 1.0	10.600	-	2106.518	2106.412	NEW CONSTRUCTION
CUL-62	19571.7	0.9 x 1.0	10.600	-	2106.583	2106.477	NEW CONSTRUCTION
CUL-63	19591.7	0.9 x 1.0	10.600	-	2106.646	2106.540	NEW CONSTRUCTION
CUL-64	19612.2	0.9 x 1.0	10.600	-	2106.711	2106.605	NEW CONSTRUCTION
CUL-65	19632.7	0.9 x 1.0	10.600	-	2106.773	2106.667	NEW CONSTRUCTION
CUL-66	19682.7	0.9 x 1.0	10.600	-	2106.929	2106.823	NEW CONSTRUCTION
CUL-67	20074.7	0.9 x 1.0	10.600	-	2107.125	2107.019	NEW CONSTRUCTION
CUL-68	20252.7	0.9 x 1.0	10.600	-	2107.781	2107.675	NEW CONSTRUCTION
CUL-69	20772.7	0.9 x 1.0	10.600	-	2110.401	2110.295	NEW CONSTRUCTION
CUL-70	22077.7	1.100 x 1.0	10.600	-	2114.530	2114.424	NEW CONSTRUCTION
CUL-71	23072.7	1.300 x 1.0	10.600	-	2117.699	2117.593	NEW CONSTRUCTION
CUL-72	23137.7	1.300 x 1.0	10.600	-	2118.089	2117.745	NEW CONSTRUCTION
CUL-73	23197.7	1.772 x 1.0	10.600	-	2117.721	2117.629	NEW CONSTRUCTION
CUL-74	23227.7	1.600 x 1.0	10.600	-	2117.699	2117.593	NEW CONSTRUCTION
CUL-75	23322.7	1.682 x 1.0	10.600	-	2121.573	2121.523	NEW CONSTRUCTION
CUL-76	23842.7	1.772 x 1.0	10.600	-	2119.669	2119.527	NEW CONSTRUCTION
CUL-77	23897.7	1.772 x 1.0	10.600	-	2120.037	2119.951	NEW CONSTRUCTION
CUL-78	24367.7	2.982 x 1.0	10.600	-	2121.705	2121.605	NEW CONSTRUCTION
CUL-79	24442.7	1.982 x 1.0	10.600	-	2121.13	2122.009	NEW CONSTRUCTION
CUL-80	24517.7	1.499 x 1.0	10.600	-	2124.026	2123.894	NEW CONSTRUCTION

STRUCTURES SCHEDULE

CULVERT

CULVERT NO.	STATION	TYPE BOX (H x W, m)	LENGTH in 'm'	SKEW	INVERT LEVEL		REMARKS
					UP STREAM	DOWN STREAM	
CUL-81	24622.7	2.071 x 1.0	10.600	-	2123.82	2123.762	NEW CONSTRUCTION
CUL-82	24812.7	1.772 x 1.0	10.600	-	2124.219	2124.133	NEW CONSTRUCTION
CUL-83	24917.7	1.772 x 1.0	10.600	-	2124.181	2123.617	NEW CONSTRUCTION
CUL-84	25312.7	1.0 x 1.0	10.600	-	2124.793	2124.687	NEW CONSTRUCTION
CUL-85	25352.7	1.530 x 1.0	10.600	-	2124.189	2124.083	NEW CONSTRUCTION
CUL-86	25548	1.682 x 1.0	10.600	-	2124.121	2124.014	NEW CONSTRUCTION
CUL-87	26682.7	1.431 x 4.0	11.280	110	2126.232	2126.126	NEW CONSTRUCTION
CUL-88	26832.7	1.614 x 1.0	10.600	-	2126.036	2125.946	NEW CONSTRUCTION
CUL-89	26952.7	1.537 x 1.0	10.600	-	2126.150	2126.099	NEW CONSTRUCTION
CUL-90	27282.7	2.027 x 1.0	10.600	-	2126.344	2126.25	NEW CONSTRUCTION
CUL-91	27352.7	0.9 x 1.0	10.600	-	2127.781	2127.675	NEW CONSTRUCTION
CUL-92	27392.7	0.9 x 1.0	10.600	-	2128.069	2127.963	NEW CONSTRUCTION
CUL-93	27492.7	1.537 x 1.0	10.600	-	2128.074	2127.854	NEW CONSTRUCTION
CUL-94	27520	0.9 x 1.0	10.600	-	2127.796	2127.69 0	NEW CONSTRUCTION
CUL-95	27612.7	1.431 x 1.0	10.600	-	2128.096	2128.022	NEW CONSTRUCTION
CUL-96	28067.7	1.165 x 1.0	10.600	-	2129.431	2129.301	NEW CONSTRUCTION
CUL-97	28195.7	1.218 x 1.0	10.600	-	2130.178	2130.103	NEW CONSTRUCTION
CUL-98	28272.7	1.537 x 1.0	10.600	-	2130.244	2130.107	NEW CONSTRUCTION
CUL-99	28875.7	1.530 x 1.0	10.600	-	2130.678	2130.555	NEW CONSTRUCTION
CUL-100	29452.7	1.082x 1.0	10.600	-	2132.459	2132.375	NEW CONSTRUCTION
CUL-101	29572.7	1.0 x 1.0	10.600	-	2132.055	2131.949	NEW CONSTRUCTION

CAUSEWAY

CAUSEWAY NO.	STATION		LENGTH (M)	REMARKS
	START	END		
CW-1	5709.704	5789.704	80	NEW CONSTRUCTION
CW-2	9919.704	9989.704	70	NEW CONSTRUCTION
CW-3	15737.704	15787.704	50	NEW CONSTRUCTION
CW-4	17944.204	17989.204	45	NEW CONSTRUCTION
CW-5	18515.704	18550.704	35	NEW CONSTRUCTION
CW-6	19897.704	19937.704	40	NEW CONSTRUCTION
CW-7	22707.900	22757.900	50	NEW CONSTRUCTION
CW-8	24027.500	24087.500	60	NEW CONSTRUCTION
CW-9	27542.500	27582.500	40	NEW CONSTRUCTION
CW-10	28414.000	28484.000	70	NEW CONSTRUCTION

LINED SIDE DRAIN

SIDE	TYPE	STATION		LENGTH & SIDE (M)	REMARKS
		START	END		
LHS	"U" DRAIN	7.7	88.7	81.00m In Side	NEW CONSTRUCTION
LHS	"U" DRAIN	5522.7	5642.7	120.00m In Side	NEW CONSTRUCTION
LHS	"U" DRAIN	12302.7	12462.7	160.00m Out Side	NEW CONSTRUCTION

STRUCTURES SCHEDULE

LINED SIDE DRAIN

SIDE	TYPE	STATION		LENGTH & SIDE (M)	REMARKS
		START	END		
LHS	"U" DRAIN	13382.7	13612.7	230.00m Out Side	NEW CONSTRUCTION
LHS	"U" DRAIN	16272.7	16357.7	85.00m Out Side	NEW CONSTRUCTION
LHS	"U" DRAIN	24448	24513	65.00m Out Side	NEW CONSTRUCTION
LHS	"U" DRAIN	24613	24733	120.00m Inside	NEW CONSTRUCTION
LHS	"U" DRAIN	26833	26938	105.00m Inside	NEW CONSTRUCTION
LHS	"U" DRAIN	26953	27078	125.00m Inside	NEW CONSTRUCTION
LHS	"U" DRAIN	27193	27243	50.00m Out Side	NEW CONSTRUCTION
LHS	"U" DRAIN	29578	29723	145.00m Inside	NEW CONSTRUCTION
RHS	"U" DRAIN	7.7	32.7	25.00m Inside	NEW CONSTRUCTION
RHS	"U" DRAIN	4468.7	4507.7	39.00m Out Side	NEW CONSTRUCTION
RHS	"U" DRAIN	4552.7	4602.7	50.00m Out Side	NEW CONSTRUCTION
RHS	"U" DRAIN	5527.7	5622.7	95.00m Inside	NEW CONSTRUCTION
RHS	"U" DRAIN	6822.7	6874.7	52.00m Out Side	NEW CONSTRUCTION
RHS	"U" DRAIN	11732.7	11792.7	60.00m Out Side	NEW CONSTRUCTION
RHS	"U" DRAIN	12127.7	12197.7	70.00m Out Side	NEW CONSTRUCTION
RHS	"U" DRAIN	12352.7	12472.7	120.00m Out Side	NEW CONSTRUCTION
RHS	"U" DRAIN	12982.7	13032.7	50.00m Out Side	NEW CONSTRUCTION
RHS	"U" DRAIN	13377.7	13682.7	305.00m Out Side	NEW CONSTRUCTION
RHS	"U" DRAIN	17222.7	17277.7	55.00m Out Side	NEW CONSTRUCTION
RHS	"U" DRAIN	24623	24733	110.00m Inside	NEW CONSTRUCTION
RHS	"U" DRAIN	26833	27063	230.00m Inside	NEW CONSTRUCTION
RHS	"U" DRAIN	27193	27243	50.00m Out Side	NEW CONSTRUCTION
RHS	"U" DRAIN	29453	29703	250.00m Inside	NEW CONSTRUCTION

SLOPE PROTECTION

LHS	GROUTED RIP RAP	23903.00	24028.00	125.00 m	NEW CONSTRUCTION
LHS	GROUTED RIP RAP	3752.704	3822.704	70.00 m	NEW CONSTRUCTION
LHS	GROUTED RIP RAP	10987.704	11022.704	35.00 m	NEW CONSTRUCTION
RHS	GROUTED RIP RAP	24090.00	24493.00	403.60 m	NEW CONSTRUCTION

RETAINING WALL

RHS	STONE MASONRY	4052.7	4082.7	30.00 m	NEW CONSTRUCTION
RHS	STONE MASONRY	12997.7	13067.7	70.00 m	NEW CONSTRUCTION
RHS	STONE MASONRY	29463	29508	45.00 m	NEW CONSTRUCTION
LHS	STONE MASONRY	1222.7	1267.7	45.00 m	NEW CONSTRUCTION
LHS	STONE MASONRY	4052.7	4122.7	70.00 m	NEW CONSTRUCTION

SIDE WALK

RHS	CONCRETE M25	13382.7	13612.7	230.00 m	NEW CONSTRUCTION
LHS	CONCRETE M25	13377.7	13632.7	255.00 m	NEW CONSTRUCTION

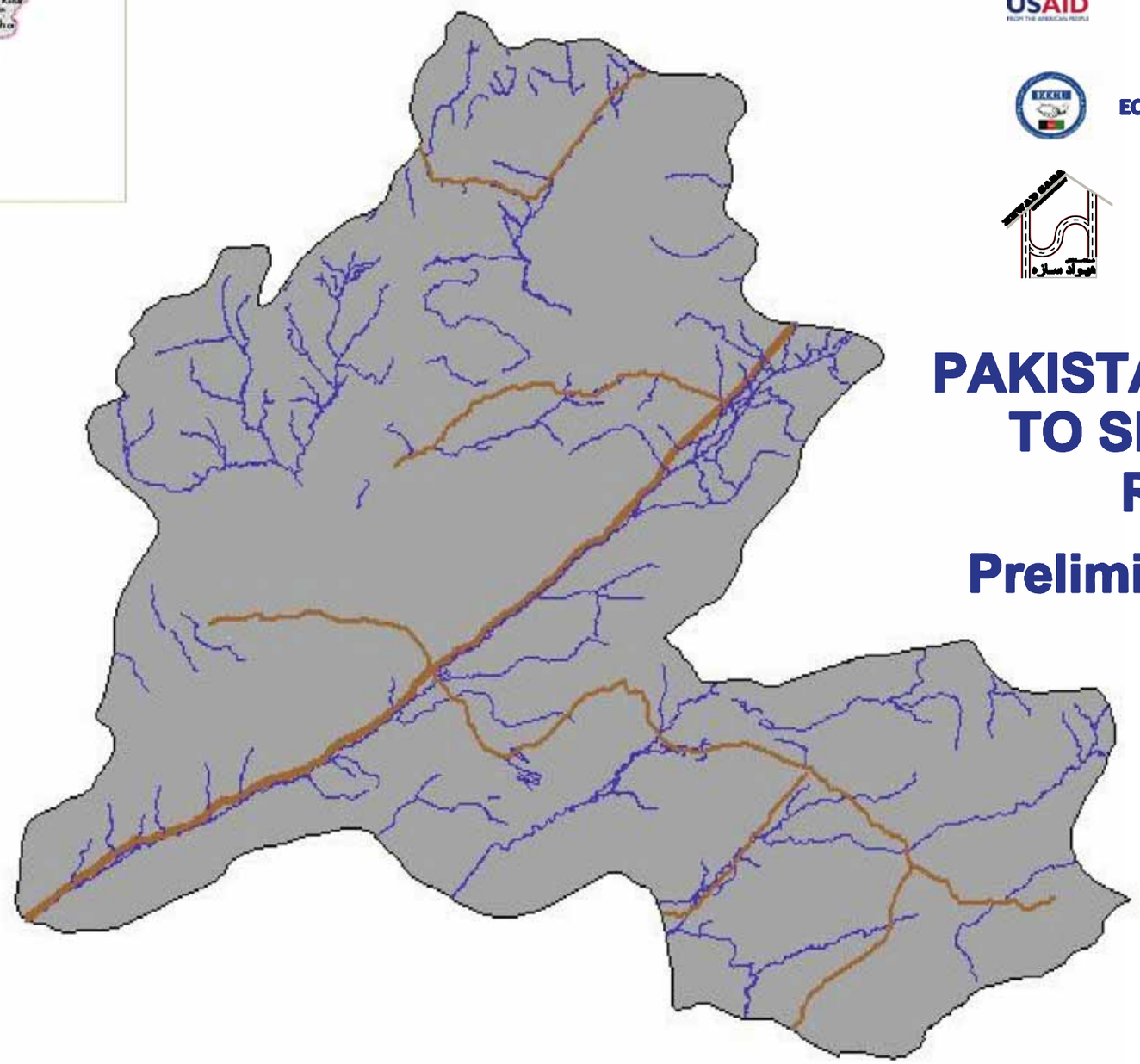

ISLAMIC REPUBLIC OF AFGHANISTAN
MINISTRY OF PUBLIC WORKS

UNITED STATES AGENCY FOR INTERNATIONAL DEVELOPMENT

ECALT CONSTRUCTION COMPANIES UNION

HSCC
HEWAD SAZA CONSTRUCTION CO.

PAKISTAN BORDER TO SHAMULZAYI Road Project

Preliminary Design Drawings

APR 2008

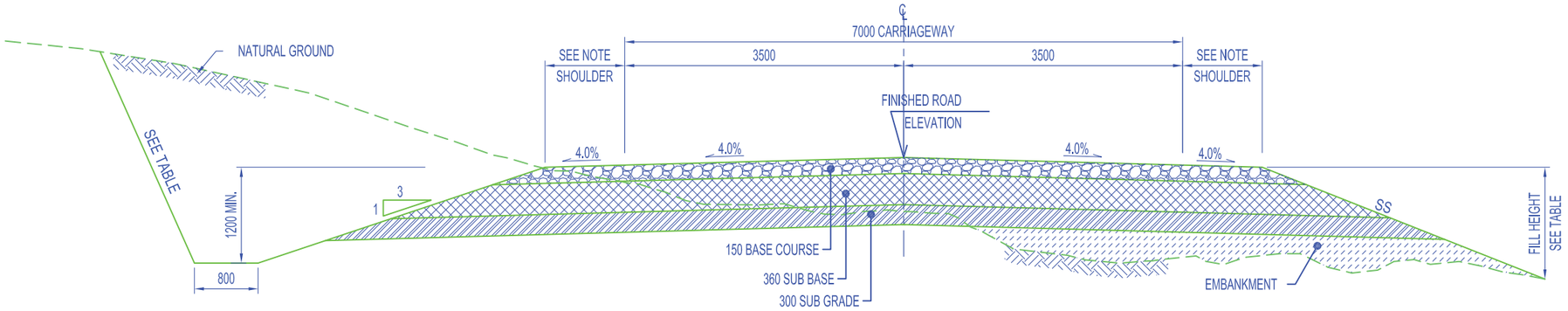

1 TYPICAL ROAD SECTION IN EARTHEN CUTS

SCALE NTS

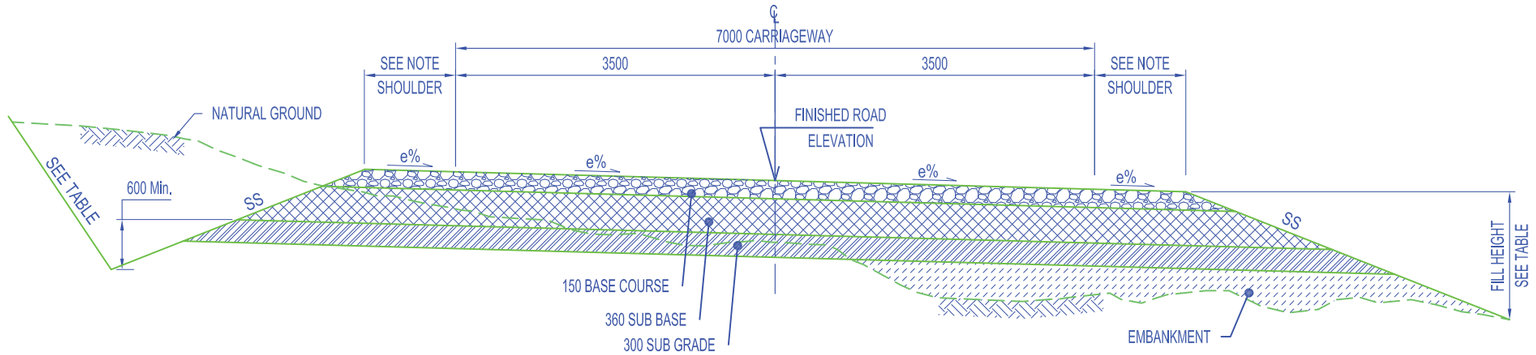

2 TYPICAL SUPERELEVATED ROAD SECTION

SCALE NTS

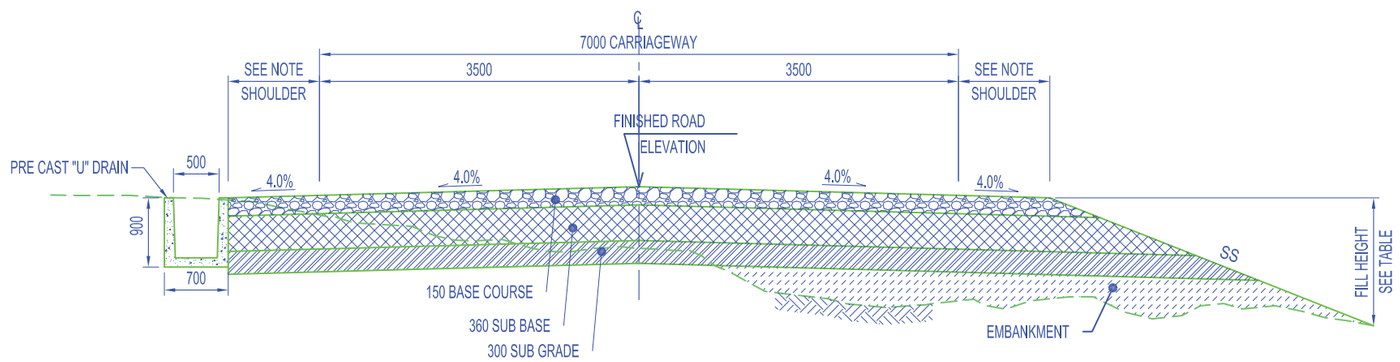

3 TYPICAL ROAD SECTION IN URBAN AREA

SCALE NTS

TABLE OF CUT AND FILL SLOPES	
HEIGHT	SLOPES
FOR FILL ≤ 3.0m	3.0 H : 1.0 V
FOR FILL ≥ 3.0m	2.0 H : 1.0 V
FOR CUT ≤ 2.0m	1.5 H : 1.0 V (SOIL MATERIALS)
FOR CUT ≤ 2.0m	1.0 H : 2.5 V (ROCK MATERIALS)
FOR CUT ≥ 2.0m	1.0 H : 2.5 V (SOIL AND ROCK)
SHOULDER	
FLAT AND ROLLING TERRAIN	1.5M WIDE
MOUNTAINOUS TERRAIN	1.0M WIDE

150 BASE COURSE
(CBR MIN. ≥ 80, AASHTO T 193 AT 100% COMPACTION, AASHTO T-180) METHOD D.

360 SUB BASE
(CBR MIN. ≥ 25, AASHTO T 193 AT 100% COMPACTION, AASHTO T-180) METHOD D.

300 SUB GRADE
(CBR MIN. ≥ 8, AASHTO T 193 AT 98% COMPACTION, AASHTO T-180) METHOD D.

NOTE:

1. THE SUPERELEVATION RATE (e) IS SHOWN ON PLANS & PROFILES FOR EACH HORIZONTAL CURVE. SEE (DWG. NO. MQ-RD-03) FOR THE METHOD OF APPLICATION.
2. UNSUITABLE MATERIALS SHALL BE REMOVED AS DIRECTED BY THE ENGINEER AND SHALL BE REPLACED WITH SUITABLE BACKFILL MATERIALS.
3. THE CONTRACTOR MAY SECURE APPROVAL FROM THE ENGINEER TO FLATTEN CUT SLOPES TO OBTAIN ADDITIONAL EMBANKMENT MATERIAL.
4. CONSTRUCT STONE MASONRY LINED DITCH (DETAIL SEE DWG NO. MQ-LSD-01) WHERE THE LONGITUDINAL PROFILE OF ROAD IS 4.0% OR GREATER, OR AS DIRECTED BY THE ENGINEER. ON ROCK CUTS, DITCH SHOULD BE SHAPED AS TYPICAL SECTION NO. 4 .
5. EXPOSED SUBGRADE SHALL BE COMPACTED TO AT LEAST 98% OF THE MAXIMUM MODIFIED PROCTOR DENSITY IN ACCORDANCE WITH AASHTO T180-95.
6. ON SECTIONS WITH ROCK SUBGRADE LEVEL (CUT), EXCAVATE 150mm BELOW SUBGRADE AND REPLACE WITH TOPPING MATERIAL OR WITH OTHER SUITABLE MATERIAL (CBR ≥ 8).
7. REFER TO DWG. NO. MQ-SS-01 FOR LINED DITCH AND ROCK DITCH SCHEDULE.
8. ALL DIMENSIONS ARE IN MILLIMETERS UNLESS OTHERWISE SHOWN.

ISLAMIC REPUBLIC OF AFGHANISTAN AND UNITED STATES AGENCY FOR INTERNATIONAL DEVELOPMENT	INTERNATIONAL RELIEF & DEVELOPMENT, INC.	BORDER OF PAKISTAN TO SHMULZAYI ROAD PROJECT # 24	SHEET CONTENTS	NAMES	SIGNATURE	DATE	SHEET NO.	REVISION	DATE
			TYPICAL ROAD SECTIONS	DESIGNED : Eng.Farhang & Eng.Atayee		19,09,2009	SHP-RD-01	FIRST ISSUE	JUL 7
				DRAWN : Eng.ghaznavi & Mr.Ebrahimi		19,09,2009		SECN ISSUE	SEP 19
	ECALT CONSTRUCTION COMPANIES UNION			CHECKED : Eng.Sharifi & Eng.Tokhi		19,09,2009	SCALE:		
				APPROVED:			AS SHOWN		

STRUCTURES SCHEDULE

CULVERT

CULVERT NO.	STATION	TYPE BOX (W xH, m)	LENGTH in 'm'	SKEW	INVERT LEVEL		REMARKS
					UP STREAM	DOWN STREAM	
C-1	0+147	2x1 Typical	10.60	---	2040.851	2040.756	NEW CONSTRUCTION
C-2	1+521	2x1 Typical	10.60	---	2044.529	2044.466	NEW CONSTRUCTION
C-3	3+175	2x1 Typical	10.60	---	2049.619	2049.573	NEW CONSTRUCTION
C-4	3+418	2x1 Skew	10.974	75	2049.262	2049.017	NEW CONSTRUCTION
C-5	3+983	1x1 Typical	10.60	---	2052.122	2052.103	NEW CONSTRUCTION
C-6	4+673	1x1 Typical	10.60	---	2058.616	2058.004	NEW CONSTRUCTION
C-7	4+845	2x1 Skew	10.974	75	2058.799	2058.149	NEW CONSTRUCTION
C-8	5+125	1x1 Typical	10.60	---	2061.507	2061.209	NEW CONSTRUCTION
C-9	5+532	2x1 Typical	10.60	---	2064.005	2063.946	NEW CONSTRUCTION
C-10	5+955	1X1 Skew	11.280	70	2065.219	2065.109	NEW CONSTRUCTION
C-11	6+075	2x1 Typical	10.60	---	2065.675	2065.323	NEW CONSTRUCTION
C-12	6+827	1X1 Skew	11.280	70	2065.899	2065.580	NEW CONSTRUCTION
C-13	7+468	1X1 Skew	11.280	70	2065.883	2065.809	NEW CONSTRUCTION
C-14	7+704	2x1 Skew	10.974	75	2065.897	2065.100	NEW CONSTRUCTION
C-15	7+873	2x1 Skew	10.974	75	2064.836	2064.434	NEW CONSTRUCTION
C-16	8+015	2x1 Typical	10.60	---	2065.494	2065.298	NEW CONSTRUCTION
C-17	8+610	1x1	10.60	---	2065.970	2065.040	NEW CONSTRUCTION
C-18	8+781	1x1 Typical	10.60	---	2065.144	2065.141	NEW CONSTRUCTION
C-19	9+548	2x1 Typical	10.60	---	2067.128	2067.019	NEW CONSTRUCTION

ROAD # 27

SHAHWALIKOT TO NESH ROAD PROJECT

60% Design Drawings

STATION 0+000 TO 13+140

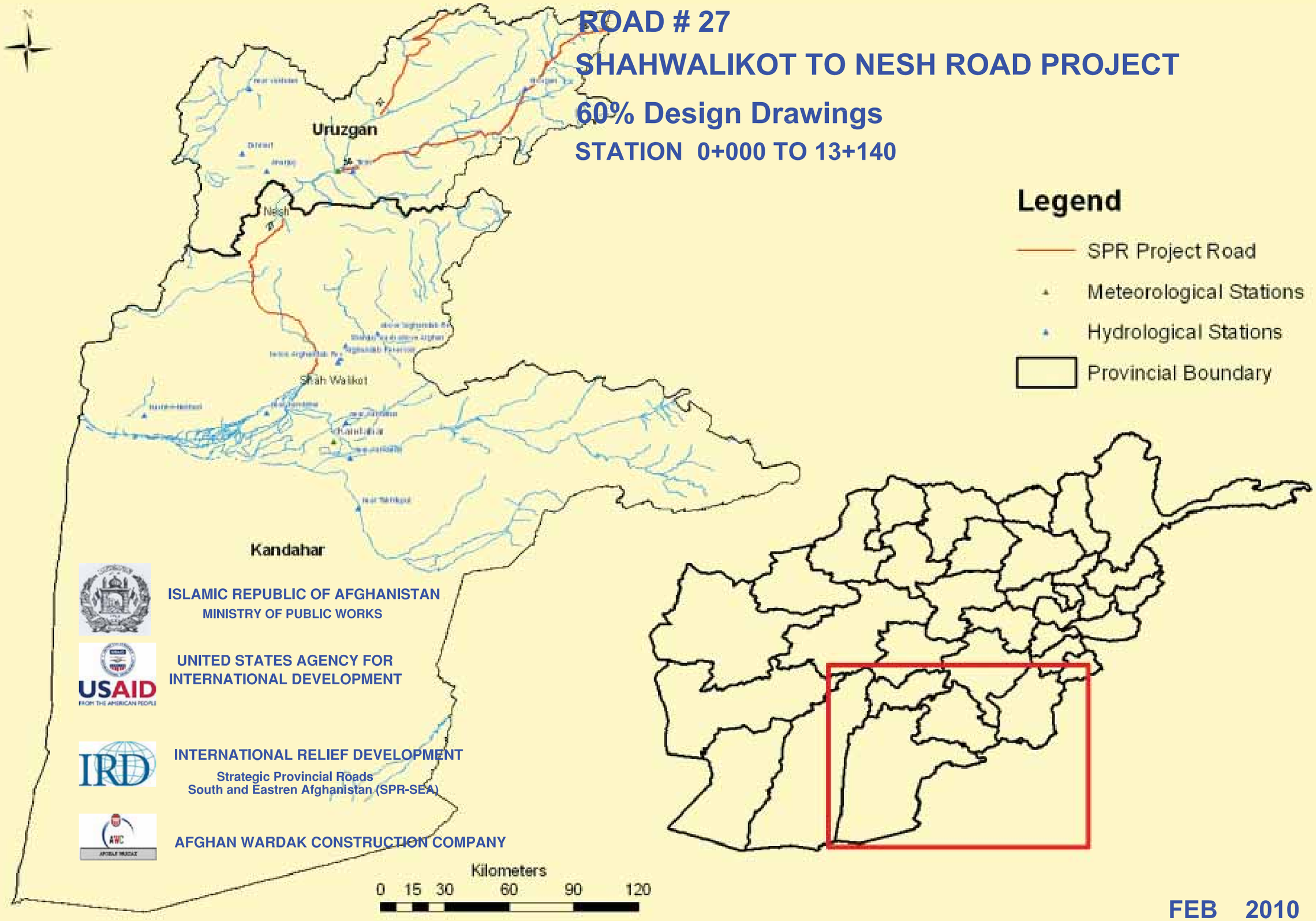

ISLAMIC REPUBLIC OF AFGHANISTAN
MINISTRY OF PUBLIC WORKS

UNITED STATES AGENCY FOR INTERNATIONAL DEVELOPMENT

INTERNATIONAL RELIEF DEVELOPMENT
Strategic Provincial Roads
South and Eastren Afghanistan (SPR-SEA)

AFGHAN WARDAK CONSTRUCTION COMPANY

FEB 2010

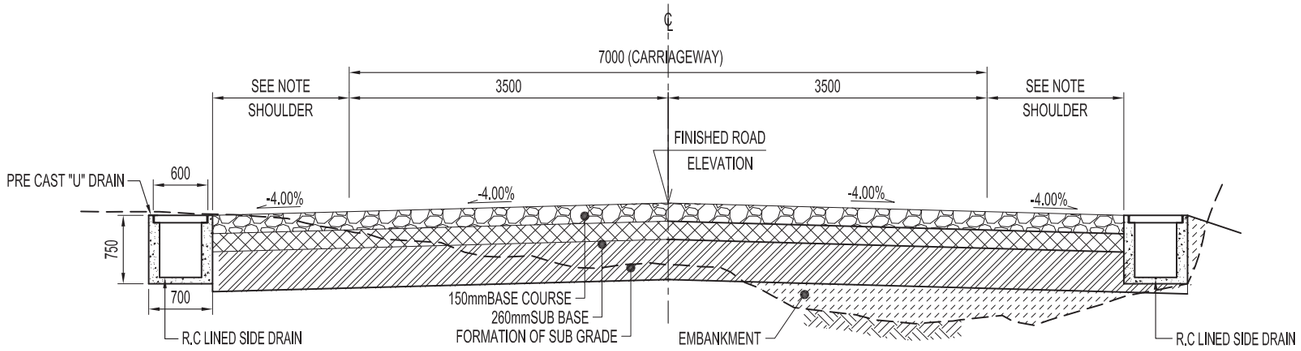

3 TYPICAL ROAD SECTION IN URBAN AREA WITH U-DRAINS (OUTSIDE)

SCALE NTS

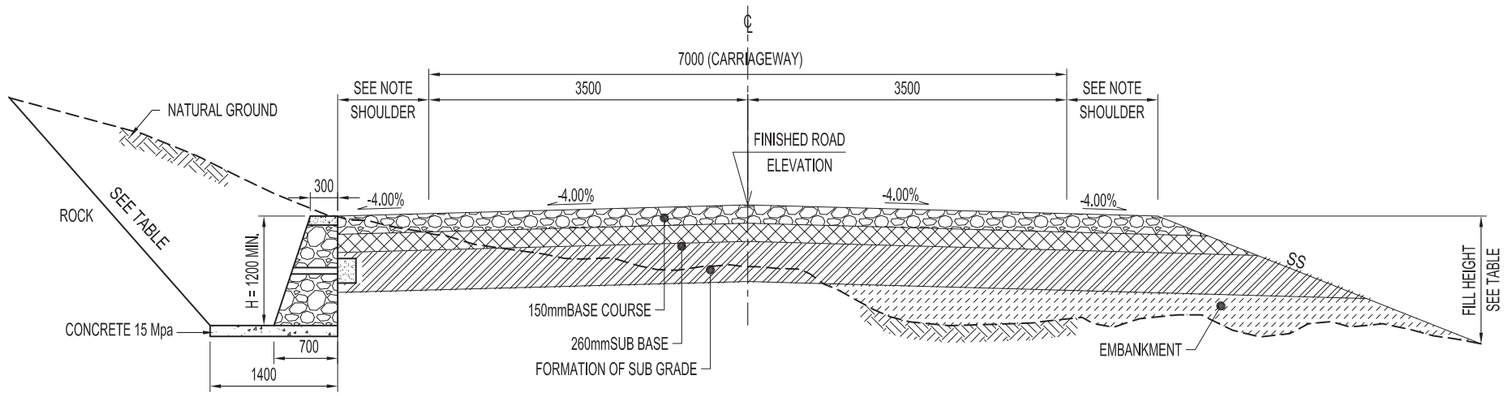

5 TYPICAL ROAD SECTION IN MOUNTAINOUS AREAS (ROCK CUT)

SCALE NTS

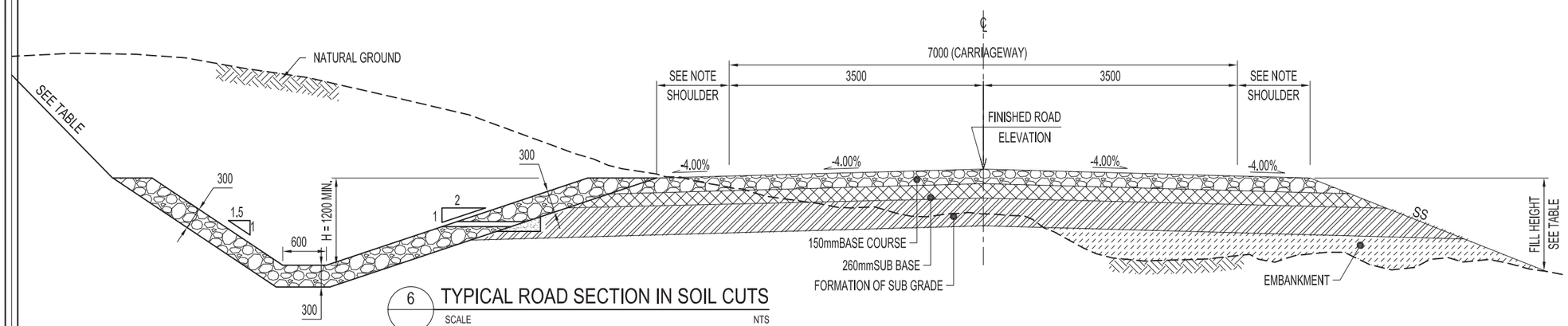

6 TYPICAL ROAD SECTION IN SOIL CUTS

SCALE NTS

TABLE OF CUT AND FILL SLOPES	
HEIGHT	SLOPES
FOR FILL ≤ 3.0m	3.0 H : 1.0 V
FOR FILL ≥ 3.0m	2.0 H : 1.0 V
FOR CUT ≤ 2.0m	1.5 H : 1.0 V (SOIL MATERIALS)
FOR CUT ≤ 2.0m	1.0 H : 2.5 V (ROCK MATERIALS)
FOR CUT ≥ 2.0m	1.0 H : 2.5 V (SOIL AND ROCK)
SHOULDER FLAT AND LEVEL TERRAIN	1.5m WIDE

BASE COURSE

(CBR MIN. ≥ 80, AASHTO T 193 AT 100% COMPACTION, AASHTO T-180) METHOD D. depth=150mm

SUB BASE

(CBR MIN. ≥ 25, AASHTO T 193 AT 100% COMPACTION, AASHTO T-180) METHOD D. depth=260mm

SUB GRADE

(CBR MIN. ≥ 8, AASHTO T 193 AT 98% COMPACTION, AASHTO T-180) METHOD D.

GRAVEL PAVEMENT LAYERS THICKNESS TO BE DESINGED BASED ON ACTUAL TRAFFIC LOADS.

NOTE:

1. THE SUPERELEVATION RATE (e) SHOULD BE SHOWN ON PLANS & PROFILES FOR EACH HORIZONTAL CURVE. SEE (DWG. NO. Typ-RD-03) FOR THE METHOD OF APPLICATION.
2. UNSUITABLE MATERIALS SHALL BE REMOVED AS DIRECTED BY THE ENGINEER AND SHALL BE REPLACED WITH SUITABLE BACKFILL MATERIALS.
3. THE CONTRACTOR MAY SECURE APPROVAL FROM THE ENGINEER TO FLATTEN CUT SLOPES TO OBTAIN ADDITIONAL EMBANKMENT MATERIAL.
4. CONSTRUCT STONE MASONRY LINED DITCH (DETAIL SEE DWG NO. Typ-LSD-01) WHERE THE LONGITUDINAL PROFILE OF ROAD IS 4.0% OR GREATER, OR AS DIRECTED BY THE ENGINEER. ON ROCK CUTS, DITCH SHOULD BE SHAPED AS TYPICAL SECTION NO. 4 .
5. EXPOSED SUBGRADE SHALL BE COMPACTED TO AT LEAST 98% OF THE MAXIMUM MODIFIED PROCTOR DENSITY IN ACCORDANCE WITH AASHTO T180-95.
6. ON SECTIONS WITH ROCK SUBGRADE LEVEL (CUT), EXCAVATE 150mm BELOW SUBGRADE AND REPLACE WITH TOPPING MATERIAL OR WITH OTHER SUITABLE MATERIAL (CBR ≥ 8).
7. ALL DIMENSIONS ARE IN MILLIMETERS UNLESS OTHERWISE SHOWN.

ISLAMIC REPUBLIC OF AFGHANISTAN
AND
UNITED STATES AGENCY FOR INTERNATIONAL DEVELOPMENT

STRATEGIC PROVINCIAL ROADS SOUTHERN AND EASTERN AFGHANISTAN INTERNATIONAL RELIEF & DEVELOPMENT, INC.
AFGHAN WARDAK CONSTRUCTION COMPANY

SHAHWALIKOT TO NISH ROAD
ROAD PROJECT #27
SECTION(20km)

SHEET CONTENTS	NAMES		SIGNATURE	DATE	SHEET NO.	REVISION	DATE
	DESIGNED By:	Eng Maiwand			2 of 2	30%SUBMITLE	26/10/09
	DRAWN By:	Eng Maiwand				60%SUBMITLE	03/06/10
	CHECKED By:	Eng M Hanif Hamdard			SCALE:		
	APPROVED By:	IRD			1:70		

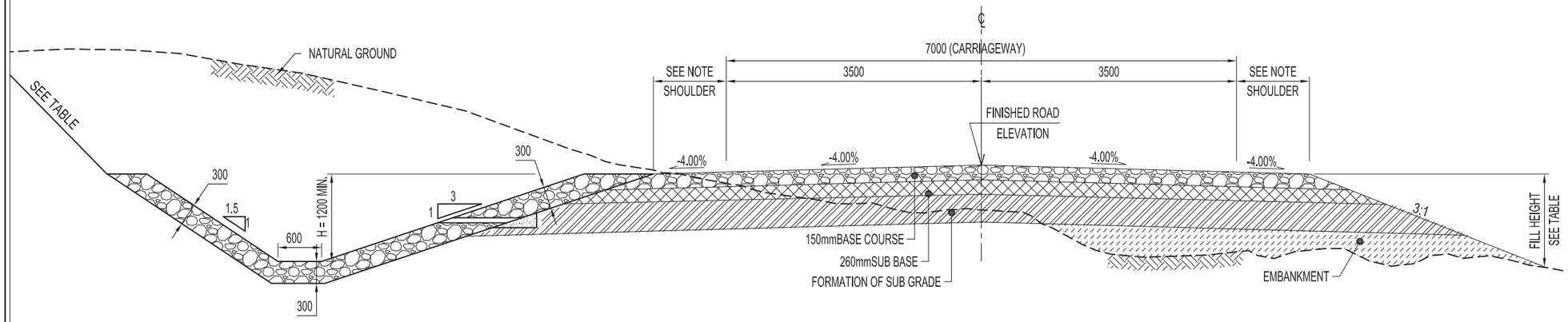

1 TYPICAL ROAD SECTION IN SOIL CUTS

SCALE NTS

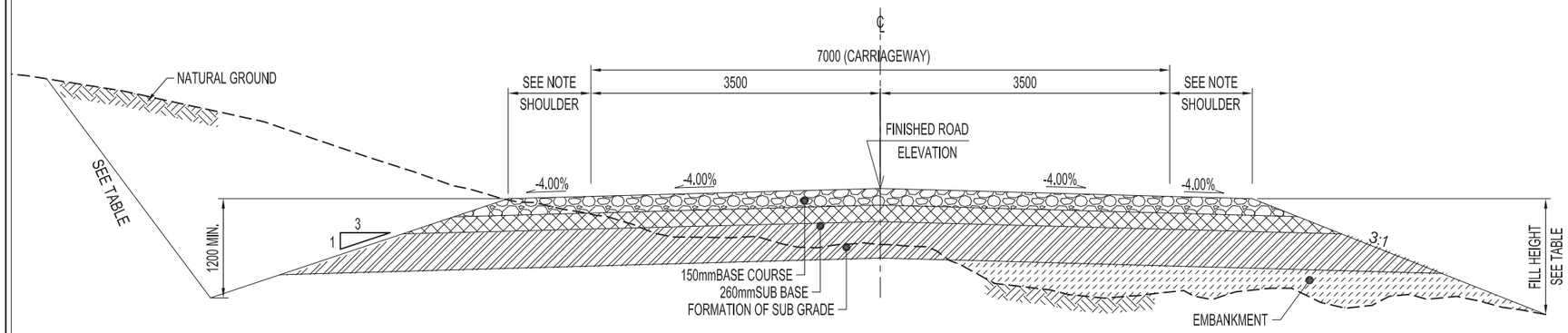

2 TYPICAL ROAD SECTION IN EARTHEN CUTS

SCALE NTS

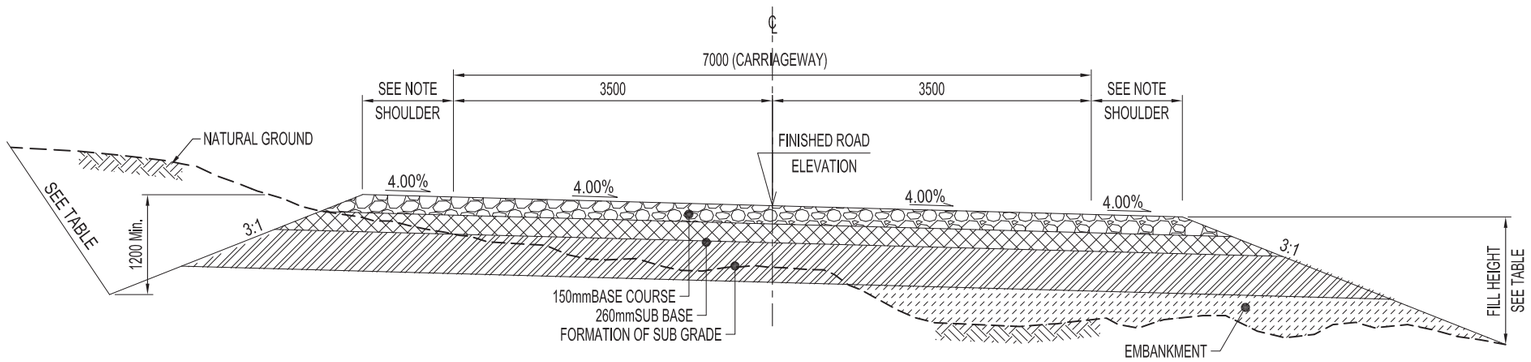

3 TYPICAL SUPERELEVATED ROAD SECTION

SCALE NTS

TABLE OF CUT AND FILL SLOPES	
HEIGHT	SLOPES
FOR FILL ≤ 3.0m	3.0 H : 1.0 V
FOR FILL ≥ 3.0m	2.0 H : 1.0 V
FOR CUT ≤ 2.0m	1.5 H : 1.0 V (SOIL MATERIALS)
FOR CUT ≤ 2.0m	1.0 H : 2.5 V (ROCK MATERIALS)
FOR CUT ≥ 2.0m	1.0 H : 2.5 V (SOIL AND ROCK)

SHOULDER
FLAT AND LEVEL TERRAIN 1.5m WIDE

BASE COURSE
(CBR MIN. ≥ 80, AASHTO T 193 AT 100% COMPACTION, AASHTO T-180) METHOD D. depth=150mm

SUB BASE
(CBR MIN. ≥ 25, AASHTO T 193 AT 100% COMPACTION, AASHTO T-180) METHOD D. depth=260

SUB GRADE
(CBR MIN. ≥ 8, AASHTO T 193 AT 98% COMPACTION, AASHTO T-180) METHOD D.

GRAVEL PAVEMENT LAYERS THICKNESS TO BE DESINGED BASED ON ACTUAL TRAFFIC LOADS.

NOTE:

1. THE SUPERELEVATION RATE (e) SHOULD BE SHOWN ON PLANS & PROFILES FOR EACH HORIZONTAL CURVE. SEE (DWG. NO. Typ-RD-03) FOR THE METHOD OF APPLICATION.
2. UNSUITABLE MATERIALS SHALL BE REMOVED AS DIRECTED BY THE ENGINEER AND SHALL BE REPLACED WITH SUITABLE BACKFILL MATERIALS.
3. THE CONTRACTOR MAY SECURE APPROVAL FROM THE ENGINEER TO FLATTEN CUT SLOPES TO OBTAIN ADDITIONAL EMBANKMENT MATERIAL.
4. CONSTRUCT STONE MASONRY LINED DITCH (DETAIL SEE DWG NO. Typ-LSD-01) WHERE THE LONGITUDINAL PROFILE OF ROAD IS 4.0% OR GREATER, OR AS DIRECTED BY THE ENGINEER. ON ROCK CUTS, DITCH SHOULD BE SHAPED AS TYPICAL SECTION NO. 4 .
5. EXPOSED SUBGRADE SHALL BE COMPACTED TO AT LEAST 98% OF THE MAXIMUM MODIFIED PROCTOR DENSITY IN ACCORDANCE WITH AASHTO T180-95.
6. ON SECTIONS WITH ROCK SUBGRADE LEVEL (CUT), EXCAVATE 150mm BELOW SUBGRADE AND REPLACE WITH TOPPING MATERIAL OR WITH OTHER SUITABLE MATERIAL (CBR ≥ 8).
7. ALL DIMENSIONS ARE IN MILLIMETERS UNLESS OTHERWISE SHOWN.

ISLAMIC REPUBLIC OF AFGHANISTAN AND UNITED STATES AGENCY FOR INTERNATIONAL DEVELOPMENT	STRATEGIC PROVINCIAL ROADS SOUTHERN AND EASTERN AFGHANISTAN INTERNATIONAL RELIEF & DEVELOPMENT, INC. AFGHAN WARDAK CONSTRUCTION COMPANY	SHAHWALIKOT TO NISH ROAD ROAD PROJECT #27 SECTION(20km)	SHEET CONTENTS	NAMES	SIGNATURE	DATE	SHEET NO.	REVISION	DATE
			TYPICLE CROSS SECTIONS	DESIGNED By: Eng Maiwand			1 of 2	30%SUBMITLE	26/10/09
				DRAWN By: Eng Maiwand				60%SUBMITLE	03/06/10
				CHECKED By: Eng M Hanif Hamdard			SCALE:		
				APPROVED By: IRD			1:70		

International Relief and Development Inc. (IRD)

STRATEGIC PROVINCIAL ROADS
SOUTHERN AND EASTERN AFGHANISTAN (SPR-SEA)

CHORA TO GIZAB ROAD PROJECT (#37)

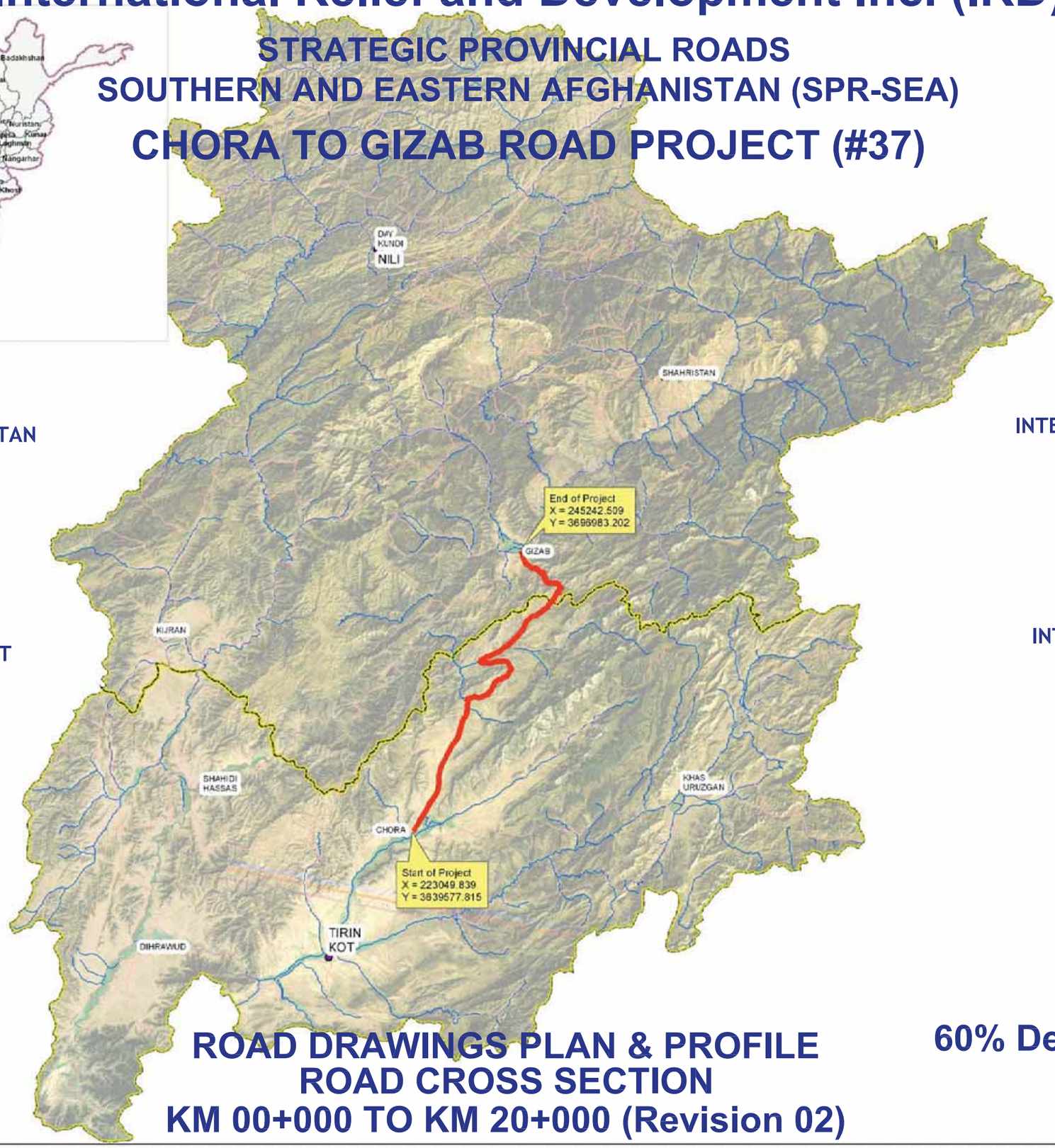

ISLAMIC REPUBLIC OF AFGHANISTAN
MINISTRY OF PUBLIC WORKS

USAID
UNITED STATES AGENCY FOR
INTERNATIONAL DEVELOPMENT

INTERNATIONAL CONSTRUCTION
MANAGEMENT

Prepared By:
ICM Design Department

IRD
INTERNATIONAL RELIEF AND
DEVELOPMENT Inc. (IRD)

ROAD DRAWINGS PLAN & PROFILE
ROAD CROSS SECTION
KM 00+000 TO KM 20+000 (Revision 02)

60% Design Drawings

Kabul, Afghanistan

June, 2009

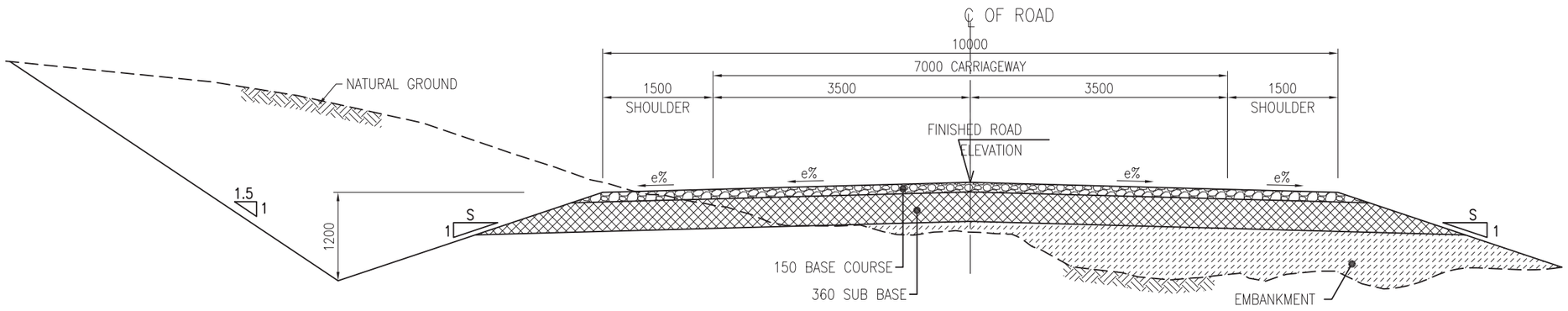

1 ROAD SECTION IN EARTHEN CUTS

SCALE NTS

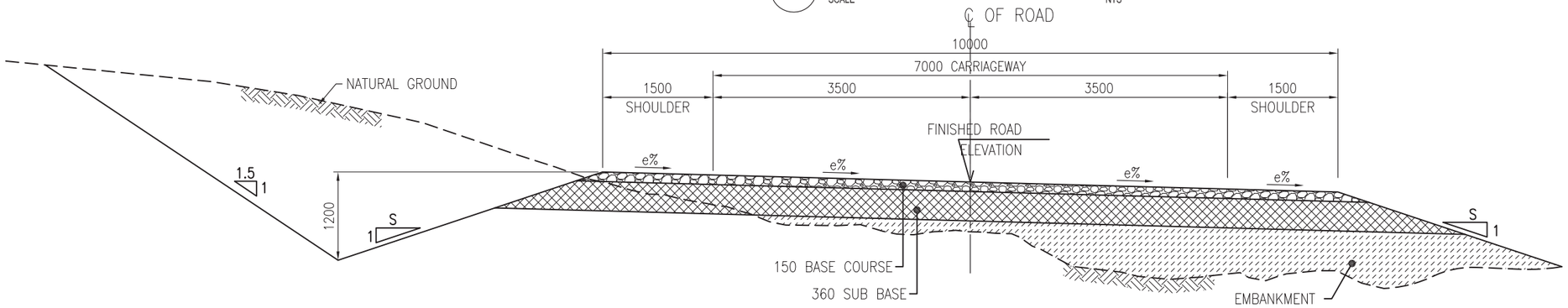

2 SUPERELEVATED ROAD SECTION

SCALE NTS

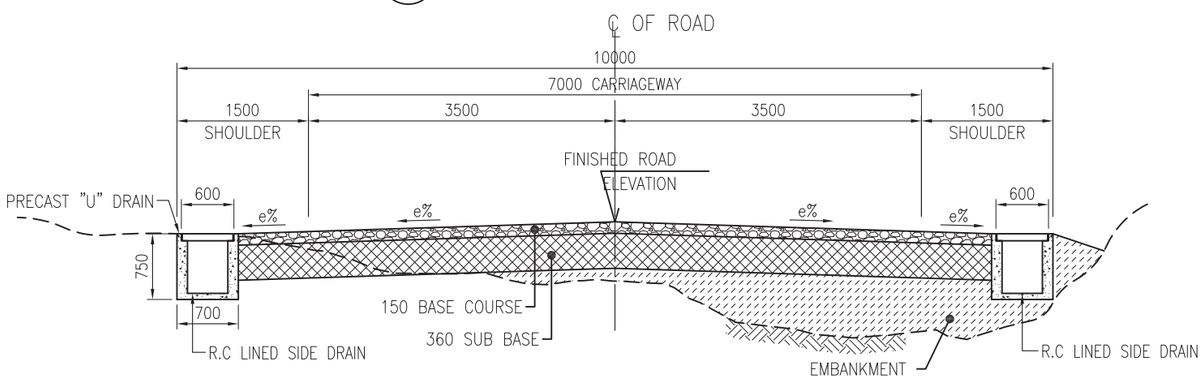

3 ROAD SECTION IN URBAN AREA WITH U-DRAINS

SCALE NTS

TABLE OF CUT AND FILL SLOPES	
HEIGHT	SLOPES
FOR FILL ≤ 3.0m	3.0 H : 1.0 V
FOR FILL ≥ 3.0m	2.0 H : 1.0 V
FOR CUT ≤ 2.0m	1.5 H : 1.0 V (SOIL MATERIALS)

150 BASE COURSE

(CBR MIN. ≥ 80, AASHTO T 193 AT 100% COMPACTION, AASHTO T-180) METHOD D.

360 SUB BASE

(CBR MIN. ≥ 25, AASHTO T 193 AT 100% COMPACTION, AASHTO T-180) METHOD D.

300 SUB GRADE

IF CBR < 08, OF EXISTING ROAD / SURFACE.

NOTE:

1. THE SUPERELEVATION RATE (e) IS SHOWN ON PLANS & PROFILES FOR EACH HORIZONTAL CURVE.
2. UNSUITABLE MATERIALS SHALL BE REMOVED AS DIRECTED BY THE ENGINEER AND SHALL BE REPLACED WITH SUITABLE BACKFILL MATERIALS.
3. THE CONTRACTOR MAY SECURE APPROVAL FROM THE ENGINEER TO FLATTEN CUT SLOPES TO OBTAIN ADDITIONAL EMBANKMENT MATERIAL.
4. EXPOSED SUBGRADE SHALL BE COMPACTED TO AT LEAST 98% OF THE MAXIMUM MODIFIED PROCTOR DENSITY IN ACCORDANCE WITH AASHTO T180-95.
5. ON SECTIONS WITH ROCK SUBGRADE LEVEL (CUT), EXCAVATE 150mm BELOW SUBGRADE AND REPLACE WITH TOPPING MATERIAL OR WITH OTHER SUITABLE MATERIAL (CBR ≥ 8).
6. THE CROSS FALL OF THE ROAD WILL FOLLOW AT 20m INTERVALS. FOR CROSS SECTIONS.
7. ALL DIMENSIONS ARE IN MILLIMETERS UNLESS OTHERWISE SHOWN.

ISLAMIC REPUBLIC OF AFGHANISTAN AND UNITED STATES AGENCY FOR INTERNATIONAL DEVELOPMENT	STRATEGIC PROVINCIAL ROADS SOUTHERN AND EASTERN AFGHANISTAN	INTERNATIONAL CONSTRUCTION MANAGEMENT	CHORA TO GIZAB ROAD KM 000 + KM 20+000	SHEET CONTENTS	NAMES	SIGNATURE	DATE	SHEET NO.	REVISION	DATE
	INTERNATIONAL RELIEF & DEVELOPMENT, INC.			ROAD SECTIONS	DESIGNED : M. NAWAZ			CG-RD-01	60% DESIGN	JUNE 09
					VERIFIED : PETER JOHN					
					CHECKED :			SCALE:		
					APPROVED:			AS SHOWN		

STRUCTURES SCHEDULE

CULVERT

CULVERT NO.	WAYPOINT NO.	STATION	TYPE BOX (H x W, m)	INVERT LEVEL		REMARKS
				UP STREAM	DOWN STREAM	
C- 01	0	0+330	0.9 x 1	1678.230	1677.700	NEW CONSTRUCTION
C- 02	1	0+465	0.9 x 1	1681.106	1680.225	NEW CONSTRUCTION
C- 03	2	0+590	0.9 x 1	1681.647	1680.600	NEW CONSTRUCTION
C- 04	3	0+650	1.5 x 1	1680.723	1679.550	NEW CONSTRUCTION
C- 05	4	0+745	0.9 x 1	1680.385	1680.125	NEW CONSTRUCTION
C- 06	5	0+815	0.9 x 1	1680.488	1679.650	NEW CONSTRUCTION
C- 07	7	0+981	0.9 x 1	1681.267	1680.500	NEW CONSTRUCTION
C- 08	9	1+103	0.9 x 1	1680.685	1680.314	NEW CONSTRUCTION
C- 09	10	1+185	0.9 x 1	1680.953	1680.350	NEW CONSTRUCTION
C- 10	11	1+305	1 x 2	1681.066	1680.275	NEW CONSTRUCTION
C- 11	13	1+448	0.9 x 1	1681.927	1681.316	NEW CONSTRUCTION
C- 12	14	1+551	0.9 x 1	1682.792	1682.492	NEW CONSTRUCTION
C- 13	15	1+728	0.9 x 1	1686.240	1685.440	NEW CONSTRUCTION
C- 14	16	1+773	1 x 2	1687.780	1686.725	NEW CONSTRUCTION
C- 15	17	1+837	0.9 x 1	1688.943	1688.140	NEW CONSTRUCTION
C- 16	19	1+892	0.9 x 1	1690.064	1689.220	NEW CONSTRUCTION
C- 17	20	1+960	0.9 x 1	1692.000	1690.600	NEW CONSTRUCTION
C- 18	21	2+028	0.9 x 1	1692.910	1691.720	NEW CONSTRUCTION
C- 19	22	2+093	0.9 x 1	1694.188	1693.360	NEW CONSTRUCTION
C- 20	24	2+190	0.9 x 1	1696.343	1695.450	NEW CONSTRUCTION
C- 21	25	2+255	0.9 x 1	1697.153	1696.565	NEW CONSTRUCTION
C- 22	26	2+320	0.9 x 1	1698.000	1697.100	NEW CONSTRUCTION
C- 23	27	2+402	0.9 x 1	1698.961	1698.070	NEW CONSTRUCTION
C- 24	29	2+458	0.9 x 1	1699.237	1698.500	NEW CONSTRUCTION
C- 25	31	2+550	1 x 2	1700.794	1699.800	NEW CONSTRUCTION
C- 26	32	2+620	1 x 2	1701.450	1701.300	NEW CONSTRUCTION
C- 27	33	2+820	1 x 2	1708.267	1708.100	NEW CONSTRUCTION
C- 28	34	2+908	0.9 x 1	1709.813	1709.340	NEW CONSTRUCTION
C- 29	35	2+987	0.9 x 1	1710.840	1710.045	NEW CONSTRUCTION
C- 30	36	3+150	0.9 x 1	1712.644	1711.550	NEW CONSTRUCTION
C- 31	37	3+367	1 x 2	1711.768	1710.910	NEW CONSTRUCTION
C- 32	38	3+475	0.9 x 1	1714.211	1713.363	NEW CONSTRUCTION
C- 33	39	3+615	0.9 x 1	1715.559	1714.988	NEW CONSTRUCTION
C- 34	40	3+782	0.9 x 1	1717.008	1716.034	NEW CONSTRUCTION
C- 35	41	3+861	0.9 x 1	1716.902	1716.548	NEW CONSTRUCTION
C- 36	42	3+998	0.9 x 1	1716.172	1715.427	NEW CONSTRUCTION
C- 37	43	4+116	0.9 x 1	1714.344	1713.714	NEW CONSTRUCTION
C- 38	44	4+221	1 x 2	1714.624	1714.456	NEW CONSTRUCTION
C- 39	45	4+453	1 x 2	1714.396	1714.230	NEW CONSTRUCTION

STRUCTURES SCHEDULE

CULVERT

CULVERT NO.	WAYPOINT NO.	STATION	TYPE BOX (H x W, m)	INVERT LEVEL		REMARKS
				UP STREAM	DOWN STREAM	
C- 40	46	4+467	0.9 x 1	1714.577	1714.370	NEW CONSTRUCTION
C- 41	47	4+513	0.9 x 1	1714.528	1714.002	NEW CONSTRUCTION
C- 42	58	4+573	0.9 x 1	1714.917	1714.490	NEW CONSTRUCTION
C- 43	49	4+723	0.9 x 1	1715.466	1715.243	NEW CONSTRUCTION
C- 44	50	4+806	0.9 x 1	1715.974	1715.598	NEW CONSTRUCTION
C- 45	51	4+895	0.9 x 1	1715.598	1714.990	NEW CONSTRUCTION
C- 46	52	4+951	1.5 x 6	1715.512	1715.367	NEW CONSTRUCTION
C- 47	53	5+012	0.9 x 1	1716.029	1715.660	NEW CONSTRUCTION
C- 48	54	5+080	0.9 x 1	1716.185	1715.770	NEW CONSTRUCTION
C- 49	55	5+141	1 x 2	1716.668	1715.964	NEW CONSTRUCTION
C- 50	56	5+263	0.9 x 1	1718.263	1718.015	NEW CONSTRUCTION
C- 51	57	5+330	0.9 x 1	1718.901	1718.750	NEW CONSTRUCTION
C- 52	58	5+405	0.9 x 1	1720.172	1719.705	NEW CONSTRUCTION
C- 53	59	5+493	1 x 2	1720.600	1720.395	NEW CONSTRUCTION
C- 54	60	5+610	0.9 x 1	1722.137	1721.635	NEW CONSTRUCTION
C- 55	61	5+740	0.9 x 1	1723.400	1723.100	NEW CONSTRUCTION
C- 56	62	5+854	0.9 x 1	1725.200	1724.759	NEW CONSTRUCTION
C- 57	63	5+877	1 x 2	1725.548	1725.406	NEW CONSTRUCTION
C- 58	64	5+954	0.9 x 1	1726.640	1726.375	NEW CONSTRUCTION
C- 59	65	6+033	1 x 4	1727.762	1727.352	NEW CONSTRUCTION
C- 60	67	6+236	0.9 x 1	1730.328	1730.170	NEW CONSTRUCTION
C- 61	68	6+425	0.9 x 1	1733.904	1733.480	NEW CONSTRUCTION
C- 62	69	6+615	0.9 x 1	1735.863	1725.230	NEW CONSTRUCTION
C- 63	70	6+745	0.9 x 1	1736.700	1736.300	NEW CONSTRUCTION
C- 64	71	6+918	1 x 2	1737.561	1737.420	NEW CONSTRUCTION
C- 65	72	7+215	1 x 2	1743.308	1742.688	NEW CONSTRUCTION
C- 66	73	7+296	1.5 x 4	1743.593	1743.390	NEW CONSTRUCTION
C- 67	74	7+321	0.9 x 1	1743.858	1743.696	NEW CONSTRUCTION
C- 68	76	7+400	0.9 x 1	1744.571	1744.200	NEW CONSTRUCTION
C- 69	78	7+479	0.9 x 1	1744.837	1744.383	NEW CONSTRUCTION
C- 70	79	7+580	1 x 2	1745.379	1745.200	NEW CONSTRUCTION
C- 71	80	7+630	0.9 x 1	1745.955	1745.815	NEW CONSTRUCTION
C- 72	81	7+784	0.9 x 1	1748.190	1747.954	NEW CONSTRUCTION
C- 73	83	7+879	0.9 x 1	1749.668	1749.528	NEW CONSTRUCTION
C- 74	84	7+941	0.9 x 1	1750.823	1750.486	NEW CONSTRUCTION
C- 75	85	8+027	0.9 x 1	1751..854	1751.608	NEW CONSTRUCTION
C- 76	86	8+080	0.9 x 1	1752.700	1752.220	NEW CONSTRUCTION
C- 77	87	8+174	0.9 x 1	1753.493	1753.287	NEW CONSTRUCTION
C- 78	88	8+216	0.9 x 1	1753.978	1753.834	NEW CONSTRUCTION

ISLAMIC REPUBLIC OF AFGHANISTAN
AND
UNITED STATES AGENCY FOR INTERNATIONAL DEVELOPMENT

STRATEGIC PROVINCIAL ROADS
SOUTHERN AND EASTERN AFGHANISTAN

INTERNATIONAL RELIEF & DEVELOPMENT, INC.

INTERNATIONAL CONSTRUCTION MANAGEMENT

CHORA TO GIZAB ROAD
KM 0+000 + KM 20+000

SHEET CONTENTS	NAMES	SIGNATURE	DATE	SHEET NO.	REVISION	DATE
STRUCTURES SCHEDULE	DESIGNED : M NAWAZ			CG-SS-01	1ST ISSUE	JULY 09
	VERIFIED : MICHAEL FIVEY					
	CHECKED :			SCALE:		
	APPROVED:			AS SHOWN		

STRUCTURES SCHEDULE

CULVERT

CULVERT NO.	WAYPOINT NO.	STATION	TYPE BOX (H x W, m)	INVERT LEVEL		REMARKS
				UP STREAM	DOWN STREAM	
C- 79	89	8+327	1 x 2	1756.201	1756.033	NEW CONSTRUCTION
C- 80	90	8+356	1 x 2	1756.948	1756.516	NEW CONSTRUCTION
C- 81	91	8+674	1 x 2	1760.765	1760.629	NEW CONSTRUCTION
C- 82	92	8+987	1 x 2	1763.208	1763.030	NEW CONSTRUCTION
C- 83	93	9+240	0.9 x 1	1767.800	1767.600	NEW CONSTRUCTION
C- 84	94	9+550	1 x 2	1770.832	1770.585	NEW CONSTRUCTION
C- 85	95	9+690	0.9 x 1	1773.093	1772.811	NEW CONSTRUCTION
C- 86	96	9+820	1 x 2	1774.468	1774.100	NEW CONSTRUCTION
C- 87	97	10+138	0.9 x 1	1777.695	1777.402	NEW CONSTRUCTION
C- 88	98	10+311	0.9 x 1	1779.930	1779.687	NEW CONSTRUCTION
C- 89	99	10+540	1 x 2	1782.586	1782.246	NEW CONSTRUCTION
C- 90	100	10+884	0.9 x 1	1789.310	1789.164	NEW CONSTRUCTION
C- 91	101	11+070	1 x 2	1793.350	1793.126	NEW CONSTRUCTION
C- 92	102	11+271	0.9 x 1	1798.475	1798.003	NEW CONSTRUCTION
C- 93	103	11+440	0.9 x 1	1799.270	1798.974	NEW CONSTRUCTION
C- 94	104	11+620	0.9 x 1	1800.960	1800.679	NEW CONSTRUCTION
C- 95	105	11+795	1 .5 x 4	1803.310	1802.923	NEW CONSTRUCTION
C- 96	106	11+851	0.9 x 1	1804.019	1803.819	NEW CONSTRUCTION
C- 97	107	12+010	0.9 x 1	1806.580	1806.400	NEW CONSTRUCTION
C- 98	108	12+187	1 x 2	1807.882	1807.466	NEW CONSTRUCTION
C- 99	109	12+334	1 x 4	1810.652	1810.380	NEW CONSTRUCTION
C-100	110	12+490	0.9 x 1	1814.046	1813.650	NEW CONSTRUCTION
C-101	111	12+628	0.9 x 1	1815.320	1814.722	NEW CONSTRUCTION
C-102	112	12+783	0.9 x 1	1817.772	1817.467	NEW CONSTRUCTION
C-103	113	12+900	0.9 x 1	1819.150	1818.798	NEW CONSTRUCTION
C-104	114	13+056	0.9 x 1	1819.260	1818.760	NEW CONSTRUCTION
C-105	115	13+153	0.9 x 1	1819.850	1819.800	NEW CONSTRUCTION
C-106	116	13+320	1 x 2	1821.277	1821.19	NEW CONSTRUCTION
C-107	120	14+785	0.9 x 1	1845.100	1844.330	NEW CONSTRUCTION
C-108	121	15+070	0.9 x 1	1846.610	1848.300	NEW CONSTRUCTION
C-109	122	15+265	0.9 x 1	1848.742	1848.293	NEW CONSTRUCTION
C-110	123	15+650	1 x 2	1852.675	1852.330	NEW CONSTRUCTION
C-111	124	15+860	1.5 x 6	1854.763	1854.600	NEW CONSTRUCTION
C-112	125	16+160	0.9 x 1	1857.673	1857.496	NEW CONSTRUCTION
C-113	126	16+470	1 x 2	1860.620	1860.200	NEW CONSTRUCTION
C-114	127	16+817	0.9 x 1	1864.145	1863.900	NEW CONSTRUCTION
C-115	128	16+884	0.9 x 1	1864.864	1864.448	NEW CONSTRUCTION
C-116	130	17+048	0.9 x 1	1866.533	1866.210	NEW CONSTRUCTION
C-117	131	17+228	0.9 x 1	1867.390	1867.224	NEW CONSTRUCTION

STRUCTURES SCHEDULE

CULVERT

CULVERT NO.	WAYPOINT NO.	STATION	TYPE BOX (H x W, m)	INVERT LEVEL		REMARKS
				UP STREAM	DOWN STREAM	
C-118	132	17+480	0.9 x 1	1869.85	1869.540	NEW CONSTRUCTION
C-119	132A	17+927	0.9 x 1	1869.715	1869.028	NEW CONSTRUCTION
C-120	133	18+185	0.9 x 1	1865.500	1865.343	NEW CONSTRUCTION
C-121	134	18+280	0.9 x 1	1865.455	1865.300	NEW CONSTRUCTION
C-122	135	18+453	0.9 x 1	1863.441	1865.245	NEW CONSTRUCTION
C-123	136	18+562	0.9 x 1	1862.584	1862.265	NEW CONSTRUCTION
C-124	137	18+653	0.9 x 1	1862.128	1861.985	NEW CONSTRUCTION
C-125	138	18+762	0.9 x 1	1859.325	1858.857	NEW CONSTRUCTION
C-126	139	18+845	0.9 x 1	1860.819	1860.142	NEW CONSTRUCTION
C-127	140	19+100	0.9 x 1	1852.961	1852.556	NEW CONSTRUCTION
C-128	141	19+290	0.9 x 1	1850.743	1850.577	NEW CONSTRUCTION
C-129	142	19+560	0.9 x 1	1844.407	1844.220	NEW CONSTRUCTION
C-130	143	19+767	0.9 x 1	1839.932	1839.772	NEW CONSTRUCTION
C-131	144	19+990	0.9 x 1	1835.250	1834.467	NEW CONSTRUCTION

CAUSEWAY

CAUSEWAY NO.	STATION0.9 x 1		LENGTH (M)	REMARKS
	START	END		
CW-01	13+552	13+592	40	NEW CONSTRUCTION
CW-02	13+947	13+997	50	NEW CONSTRUCTION
CW-03	14+245	14+295	50	NEW CONSTRUCTION

SLOPE PROTECTION

GROUTED RIPRAP	STATION		LENGTH (M)	REMARKS
	START	END		
LHS	2+580	2+620	40	NEW CONSTRUCTION

U - DRAIN

(R.C.C)	STATION		LENGTH (M)	REMARKS
	START	END		
BHS	0+000	0+150	150	NEW CONSTRUCTION
BHS	0+190	0+590	400	NEW CONSTRUCTION

ISLAMIC REPUBLIC OF AFGHANISTAN
AND
UNITED STATES AGENCY FOR INTERNATIONAL DEVELOPMENT

STRATEGIC PROVINCIAL ROADS SOUTHERN AND EASTERN AFGHANISTAN

INTERNATIONAL RELIEF & DEVELOPMENT, INC.

INTERNATIONAL CONSTRUCTION MANAGEMENT

CHORA TO GIZAB ROAD
KM 0+000 + KM 20+000

SHEET CONTENTS	NAMES	SIGNATURE	DATE	SHEET NO.	REVISION	DATE
STRUCTURES SCHEDULE	DESIGNED : M NAWAZ			CG-SS-02	1ST ISSUE	JULY 09
	VERIFIED : MICHAEL FIVEY					
	CHECKED :			SCALE:		
	APPROVED:			AS SHOWN		

ROAD # 38

MALISTAN TO KHAS UROZGAN ROAD PROJECT

90% Design Drawings

STATION 0+000 TO 21+020

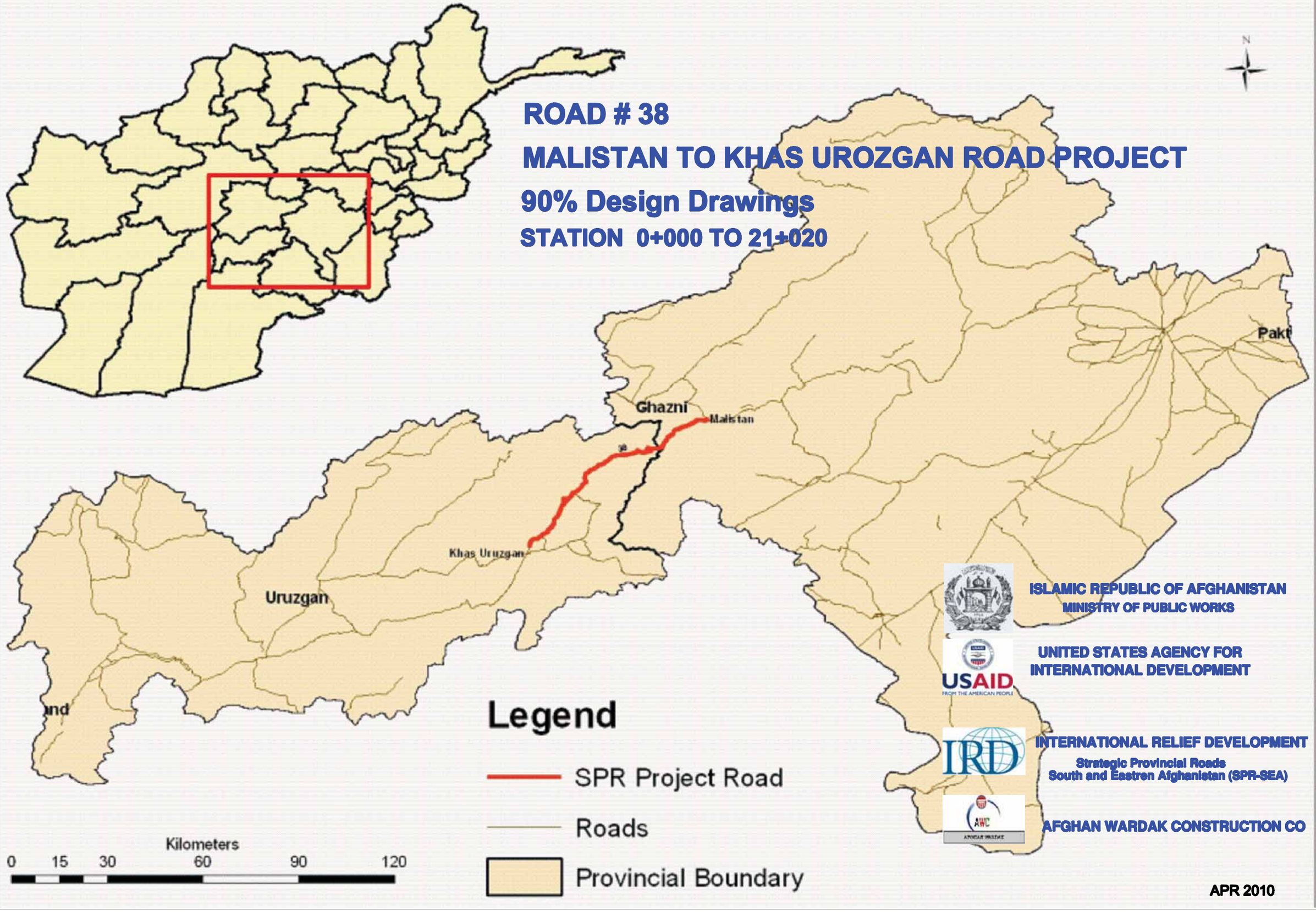

ISLAMIC REPUBLIC OF AFGHANISTAN
MINISTRY OF PUBLIC WORKS

UNITED STATES AGENCY FOR INTERNATIONAL DEVELOPMENT

INTERNATIONAL RELIEF DEVELOPMENT
Strategic Provincial Roads
South and Eastren Afghanistan (SPR-SEA)

AFGHAN WARDAK CONSTRUCTION CO

APR 2010

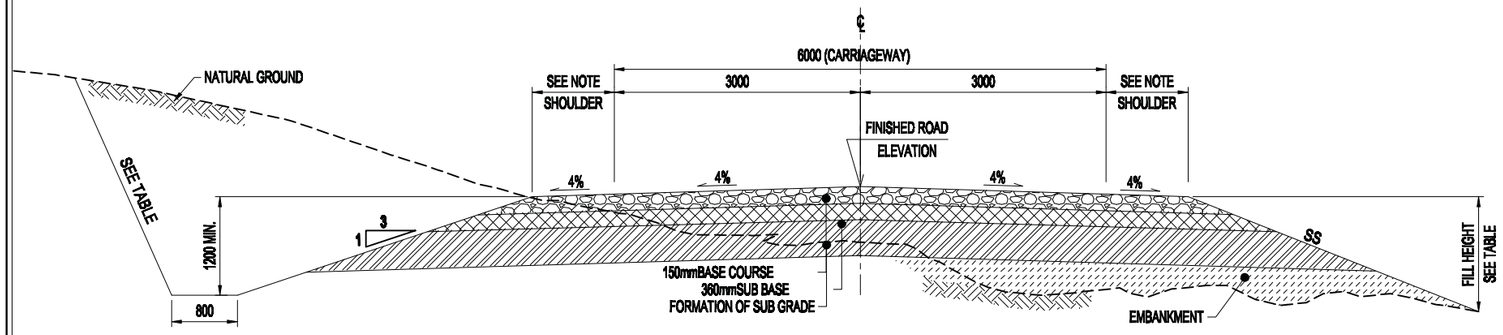

1 TYPICAL ROAD SECTION IN EARTHEN CUTS

SCALE NTS

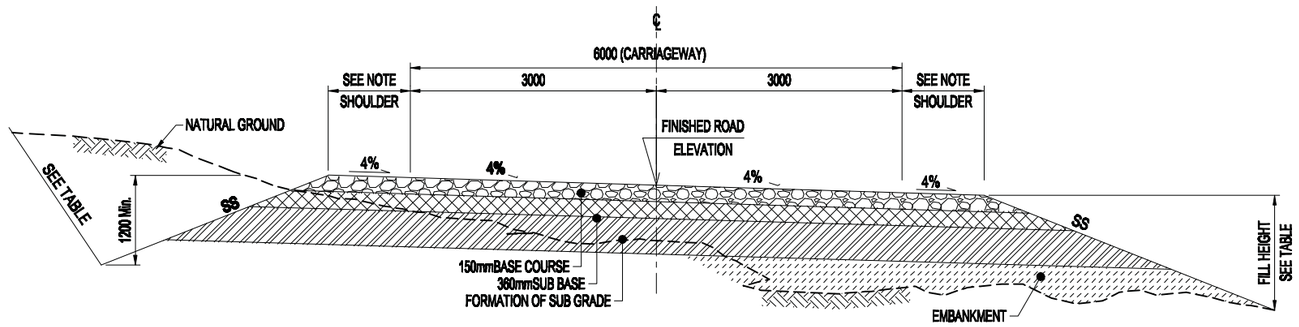

2 TYPICAL SUPERELEVATED ROAD SECTION

SCALE NTS

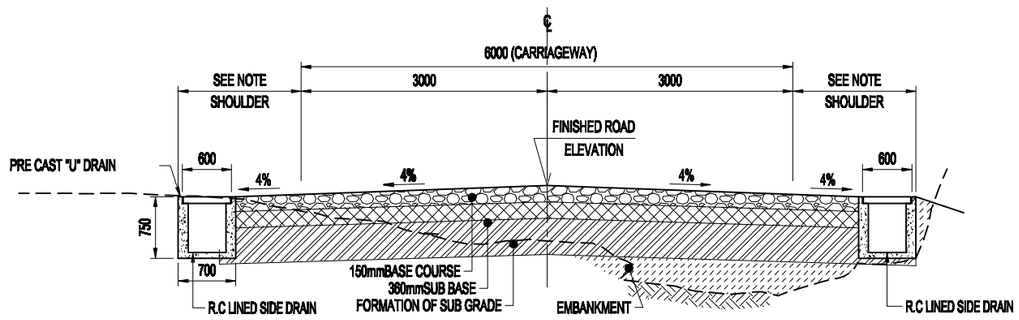

3 TYPICAL ROAD SECTION IN URBAN AREA WITH U-DRAINS (INSIDE)

SCALE NTS

TABLE OF CUT AND FILL SLOPES	
HEIGHT	SLOPES
FOR FILL ≤ 3.0m	3.0 H : 1.0 V
FOR FILL ≥ 3.0m	2.0 H : 1.0 V
FOR CUT ≤ 2.0m	1.5 H : 1.0 V (SOIL MATERIALS)
FOR CUT ≤ 2.0m	1.0 H : 2.5 V (ROCK MATERIALS)
FOR CUT ≥ 2.0m	1.0 H : 2.5 V (SOIL AND ROCK)
SHOULDER	
FLAT AND ROLLING TERRAIN	FROM KM (21+00)TO(41+840) SHULDERS WIDE IS 0.5M
MOUNTAINOUS TERRAIN	
BASE COURSE (CBR MIN. ≥ 80, AASHTO T 193 AT 100% COMPACTION, AASHTO T-180) METHOD D.	
SUB BASE (CBR MIN. ≥ 25, AASHTO T 193 AT 100% COMPACTION, AASHTO T-180) METHOD D.	
SUB GRADE (CBR MIN. > 8, AASHTO T 193 AT 98% COMPACTION, AASHTO T-180) METHOD D.	
GRAVEL PAVEMENT LAYERS THICKNESS TO BE DESINGED BASED ON ACTUAL TRAFFIC LOADS.	

NOTE:

1. THE SUPERELEVATION RATE (e) SHOULD BE SHOWN ON PLANS & PROFILES FOR EACH HORIZONTAL CURVE. SEE (DWG. NO. Typ-RD-03) FOR THE METHOD OF APPLICATION.
2. UNSUITABLE MATERIALS SHALL BE REMOVED AS DIRECTED BY THE ENGINEER AND SHALL BE REPLACED WITH SUITABLE BACKFILL MATERIALS.
3. THE CONTRACTOR MAY SECURE APPROVAL FROM THE ENGINEER TO FLATTEN CUT SLOPES TO OBTAIN ADDITIONAL EMBANKMENT MATERIAL.
4. CONSTRUCT STONE MASONRY LINED DITCH (DETAIL SEE DWG NO. Typ-LSD-01) WHERE THE LONGITUDINAL PROFILE OF ROAD IS 4.0% OR GREATER, OR AS DIRECTED BY THE ENGINEER. ON ROCK CUTS, DITCH SHOULD BE SHAPED AS TYPICAL SECTION NO. 4 .
5. EXPOSED SUBGRADE SHALL BE COMPACTED TO AT LEAST 98% OF THE MAXIMUM MODIFIED PROCTOR DENSITY IN ACCORDANCE WITH AASHTO T180-95.
6. ON SECTIONS WITH ROCK SUBGRADE LEVEL (CUT), EXCAVATE 150mm BELOW SUBGRADE AND REPLACE WITH TOPPING MATERIAL OR WITH OTHER SUITABLE MATERIAL (CBR ≥ 8).
7. ALL DIMENSIONS ARE IN MILLIMETERS UNLESS OTHERWISE SHOWN.

ISLAMIC REPUBLIC OF AFGHANISTAN AND UNITED STATES AGENCY FOR INTERNATIONAL DEVELOPMENT	STRATEGIC PROVINCIAL ROADS SOUTHERN AND EASTERN AFGHANISTAN INTERNATIONAL RELIEF & DEVELOPMENT, INC. AFGHAN WARDAK CONSTRUCTION COMPANY	30% TYPICAL DRAWINGS	SHEET CONTENTS	NAMES	SIGNATURE	DATE	SHEET NO.	REVISION	DATE
			TYPICLE CROSS SECTIONS	DESIGNED By:Eng Maiwand			1 of 2	30% Submittal	15,08,09
				DRAWN By:Eng M Khalid Mayar					
				CHECKED By:Eng M Hanif Hamdard			SCALE:		
				APPROVED By:IRD			1:70		

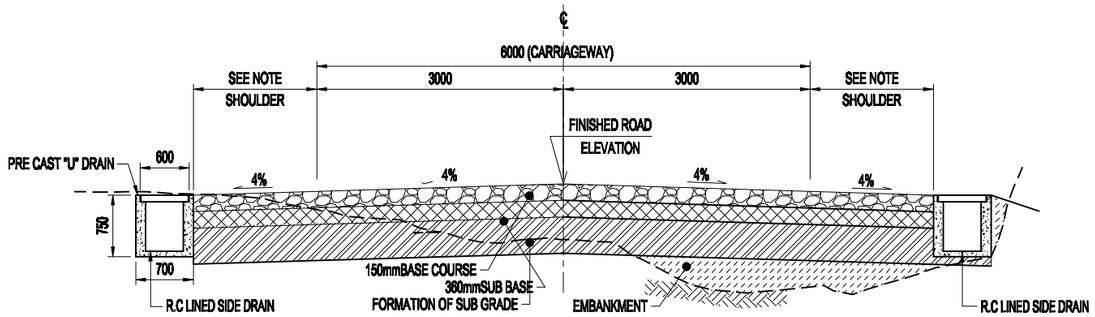

4 TYPICAL ROAD SECTION IN URBAN AREA WITH U-DRAINS (OUTSIDE)

SCALE NTS

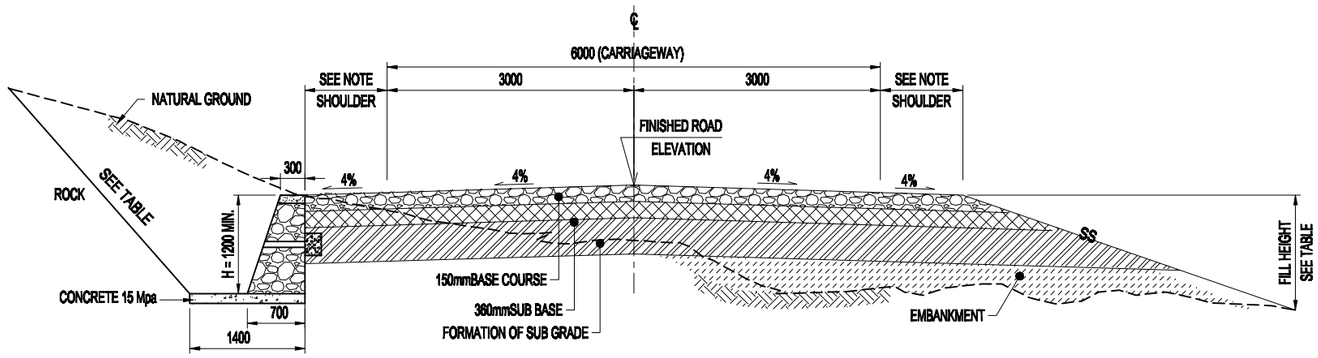

4 TYPICAL ROAD SECTION IN MOUNTAINOUS AREAS (ROCK CUT)

SCALE NTS

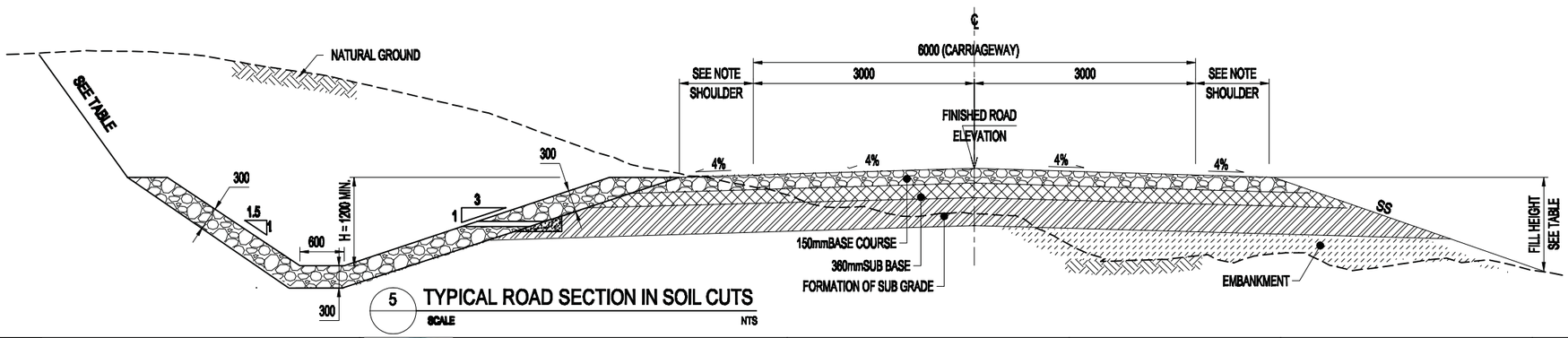

5 TYPICAL ROAD SECTION IN SOIL CUTS

SCALE NTS

	TABLE OF CUT AND FILL SLOPES	
	HEIGHT	SLOPES
FOR FILL	≤ 3.0m	3.0 H : 1.0 V
FOR FILL	≥ 3.0m	2.0 H : 1.0 V
FOR CUT	≤ 2.0m	1.5 H : 1.0 V (SOIL MATERIALS)
FOR CUT	≤ 2.0m	1.0 H : 2.5 V (ROCK MATERIALS)
FOR CUT	≥ 2.0m	1.0 H : 2.5 V (SOIL AND ROCK)
SHOULDER		
FLAT AND ROLLING TERRAIN		FROM KM (21+00)TO(41+840) SHULDERS WIDE IS 0.5M
MOUNTAINOUS TERRAIN		
BASE COURSE (CBR MIN. ≥ 80, AASHTO T 193 AT 100% COMPACTION, AASHTO T-180) METHOD D.		
SUB BASE (CBR MIN. ≥ 25, AASHTO T 193 AT 100% COMPACTION, AASHTO T-180) METHOD D.		
SUB GRADE (CBR MIN. ≥ 8, AASHTO T 193 AT 98% COMPACTION, AASHTO T-180) METHOD D.		
GRAVEL PAVEMENT LAYERS THICKNESS TO BE DESINGED BASED ON ACTUAL TRAFFIC LOADS.		

NOTE:

1. THE SUPERELEVATION RATE (e) SHOULD BE SHOWN ON PLANS & PROFILES FOR EACH HORIZONTAL CURVE. SEE (DWG. NO. Typ-RD-03) FOR THE METHOD OF APPLICATION.
2. UNSUITABLE MATERIALS SHALL BE REMOVED AS DIRECTED BY THE ENGINEER AND SHALL BE REPLACED WITH SUITABLE BACKFILL MATERIALS.
3. THE CONTRACTOR MAY SECURE APPROVAL FROM THE ENGINEER TO FLATTEN CUT SLOPES TO OBTAIN ADDITIONAL EMBANKMENT MATERIAL.
4. CONSTRUCT STONE MASONRY LINED DITCH (DETAIL SEE DWG NO. Typ-LSD-01) WHERE THE LONGITUDINAL PROFILE OF ROAD IS 4.0% OR GREATER, OR AS DIRECTED BY THE ENGINEER. ON ROCK CUTS, DITCH SHOULD BE SHAPED AS TYPICAL SECTION NO. 4 .
5. EXPOSED SUBGRADE SHALL BE COMPACTED TO AT LEAST 98% OF THE MAXIMUM MODIFIED PROCTOR DENSITY IN ACCORDANCE WITH AASHTO T180-95.
6. ON SECTIONS WITH ROCK SUBGRADE LEVEL (CUT), EXCAVATE 150mm BELOW SUBGRADE AND REPLACE WITH TOPPING MATERIAL OR WITH OTHER SUITABLE MATERIAL (CBR > 8).
7. ALL DIMENSIONS ARE IN MILLIMETERS UNLESS OTHERWISE SHOWN.

ISLAMIC REPUBLIC OF AFGHANISTAN AND UNITED STATES AGENCY FOR INTERNATIONAL DEVELOPMENT	STRATEGIC PROVINCIAL ROADS SOUTHERN AND EASTERN AFGHANISTAN INTERNATIONAL RELIEF & DEVELOPMENT, INC. AFGHAN WARDAK CONSTRUCTION COMPANY	30% TYPICAL DRAWINGS	SHEET CONTENTS	NAMES	SIGNATURE	DATE	SHEET NO.	REVISION	DATE
			TYPICLE CROSS SECTIONS	DESIGNED By:Eng Maiwand			2 of 2	30% Submittal	15,08,09
				DRAWN By:Eng M Khalid Mayar					
				CHECKED By:Eng M Hanif Hamdard			SCALE:		
				APPROVED By:IRD			1:70		

STRUCTURE SCHEDULE OF (MALISTAN TO KHAS UROZGHAN ROAD)
CULVERTS

CULVERT NO	STATION	TYPE (HxWxL,m)	CULV INVERT ELEV		REMARKS
			UP S.E	DOWN S.E	
PIPE CUL-1	0+027	(ØXL)(1X7)m			NEW CONSTRUCTION
PIPE CUL-2	0+089	(ØXL)(1X7)m			NEW CONSTRUCTION
PIPE CUL-3	0+200	(ØXL)(1X7)m			NEW CONSTRUCTION
BOX CUL-4	0+310	(4X1.96X8.604)m	2924.93	2924.93	NEW CONSTRUCTION
PIPE CUL-5	0+530	(ØXL)(1X7)m			NEW CONSTRUCTION
PIPE CUL-6	0+582	(ØXL)(1X7)m			NEW CONSTRUCTION
PIPE CUL-7	0+606	(ØXL)(1X7)m			NEW CONSTRUCTION
BOX CUL-8	0+614	(2X1.168X7)m	2941.44	2940.89	NEW CONSTRUCTION
PIPE CUL-9	0+758	(ØXL)(1X7)m			NEW CONSTRUCTION
PIPE CUL-10	0+852	(ØXL)(1X7)m			NEW CONSTRUCTION
PIPE CUL-11	0+900	(ØXL)(1X7)m			NEW CONSTRUCTION
PIPE CUL-12	1+124	(ØXL)(1X7)m			NEW CONSTRUCTION
BOX CUL-13	1+630	(4X1.679X7)m	2977.52	2977.10	NEW CONSTRUCTION
PIPE CUL-14	1+753	(ØXL)(1X7)m			NEW CONSTRUCTION
PIPE CUL-15	1+860	(ØXL)(1X7)m			NEW CONSTRUCTION
BOX CUL-16	1+916	(2X1.093X7)m	2990.99	2991.39	NEW CONSTRUCTION
PIPE CUL-17	2+048	(ØXL)(1X7)m			NEW CONSTRUCTION
PIPE CUL-18	2+160	(ØXL)(1X7)m			NEW CONSTRUCTION
BOX CUL-19	2+206	(2X0.9X7)m	3006.22	3006.22	NEW CONSTRUCTION
PIPE CUL-20	2+280	(ØXL)(1X7)m			NEW CONSTRUCTION
BOX CUL-21	2+420	(2X1.175X7)m	3020.90	3020.34	NEW CONSTRUCTION
BOX CUL-22	2+502	(2X1.093X7)m	3024.16	3023.76	NEW CONSTRUCTION
PIPE CUL-23	2+580	(ØXL)(1X7)m			NEW CONSTRUCTION
PIPE CUL-24	2+662	(ØXL)(1X7)m			NEW CONSTRUCTION
PIPE CUL-25	2+775	(ØXL)(1X7)m			NEW CONSTRUCTION
PIPE CUL-26	2+930	(ØXL)(1X7)m			NEW CONSTRUCTION
BOX CUL-27	3+120	(2X1.17X7)m	3064.04	3063.48	NEW CONSTRUCTION
BOX CUL-28	3+146	(2X0.9X7)m	3064.37	3064.34	NEW CONSTRUCTION
PIPE CUL-29	3+260	(ØXL)(1X7)m			NEW CONSTRUCTION
BOX CUL-30	3+310	(2X1.075X7)m	3080.24	3079.68	NEW CONSTRUCTION
PIPE CUL-31	3+400	(ØXL)(1X7)m			NEW CONSTRUCTION
PIPE CUL-32	3+459	(ØXL)(1X7)m			NEW CONSTRUCTION
PIPE CUL-33	3+500	(ØXL)(1X7)m			NEW CONSTRUCTION
PIPE CUL-34	3+620	(ØXL)(1X7)m			NEW CONSTRUCTION
PIPE CUL-35	3+660	(ØXL)(1X7)m			NEW CONSTRUCTION
PIPE CUL-36	3+720	(ØXL)(1X7)m			NEW CONSTRUCTION
PIPE CUL-37	3+840	(ØXL)(1X7)m			NEW CONSTRUCTION
PIPE CUL-38	4+122	(ØXL)(1X7)m			NEW CONSTRUCTION
PIPE CUL-39	4+240	(ØXL)(1X7)m			NEW CONSTRUCTION
PIPE CUL-40	4+342	(ØXL)(1X7)m			NEW CONSTRUCTION
PIPE CUL-41	4+680	(ØXL)(1X7)m			NEW CONSTRUCTION
BOX CUL-42	4+940	(2X1.093X7)m	3070.06	3069.66	NEW CONSTRUCTION
PIPE CUL-43	5+250	(ØXL)(1X7)m			NEW CONSTRUCTION
BOX CUL-44	5+286	(2X1.119X7)m	3046.932	3046.470	NEW CONSTRUCTION
PIPE CUL-45	5+400	(ØXL)(1X7)m			NEW CONSTRUCTION
BOX CUL-46	5+710	(2X0.9X7)m	3030.337	3030.386	NEW CONSTRUCTION
PIPE CUL-47	5+835	(ØXL)(1X7)m			NEW CONSTRUCTION
PIPE CUL-48	5+885	(ØXL)(1X7)m			NEW CONSTRUCTION
PIPE CUL-49	6+005	(ØXL)(1X7)m			NEW CONSTRUCTION
PIPE CUL-50	6+170	(ØXL)(1X7)m			NEW CONSTRUCTION
PIPE CUL-51	6+260	(ØXL)(1X7)m			NEW CONSTRUCTION
PIPE CUL-52	6+380	(ØXL)(1X7)m			NEW CONSTRUCTION
PIPE CUL-53	6+490	(ØXL)(1X7)m			NEW CONSTRUCTION
PIPE CUL-54	6+605	(ØXL)(1X7)m			NEW CONSTRUCTION
PIPE CUL-55	6+755	(ØXL)(1X7)m			NEW CONSTRUCTION
PIPE CUL-56	6+890	(ØXL)(1X7)m			NEW CONSTRUCTION
PIPE CUL-57	6+930	(ØXL)(1X7)m			NEW CONSTRUCTION
BOX CUL-58	7+005	(2X0.9X7)m	2975.375	2975.27	NEW CONSTRUCTION
PIPE CUL-59	7+065	(ØXL)(1X7)m			NEW CONSTRUCTION
PIPE CUL-60	7+285	(ØXL)(1X7)m			NEW CONSTRUCTION
PIPE CUL-61	7+540	(ØXL)(1X7)m			NEW CONSTRUCTION
BOX CUL-62	7+772	(2X1.136X7)m	2944.31	2943.77	NEW CONSTRUCTION
PIPE CUL-63	7+870	(ØXL)(1X7)m			NEW CONSTRUCTION
PIPE CUL-64	8+095	(ØXL)(1X7)m			NEW CONSTRUCTION
PIPE CUL-65	8+385	(ØXL)(1X7)m			NEW CONSTRUCTION
BOX CUL-66	8+480	(2X1.119X7)m	2921.247	2921.713	NEW CONSTRUCTION
BOX CUL-67	8+695	(4X2.5X7)m	2915.520	2915.758	NEW CONSTRUCTION
BOX CUL-68	8+870	(4X1.00X7)m	2911.498	2911.398	NEW CONSTRUCTION
PIPE CUL-69	8+920	(ØXL)(1X7)m			NEW CONSTRUCTION

BOX CUL-70	9+005	(2X0.9X7)m	**2907.155**	**2907.12**	NEW CONSTRUCTION
PIPE CUL-71	9+105	**(ØXL)**(1X7)m			NEW CONSTRUCTION
PIPE CUL-72	9+180	**(ØXL)**(1X7)m			NEW CONSTRUCTION
BOX CUL-73	9+230	(4X1.262X7)m	**2905.772**	**2905.247**	NEW CONSTRUCTION
PIPE CUL-74	9+330	**(ØXL)**(1X7)m			NEW CONSTRUCTION
PIPE CUL-75	9+510	**(ØXL)**(1X7)m			NEW CONSTRUCTION
PIPE CUL-76	9+650	**(ØXL)**(1X7)m			NEW CONSTRUCTION
PIPE CUL-77	9+850	**(ØXL)**(1X7)m			NEW CONSTRUCTION
PIPE CUL-78	10+100	**(ØXL)**(1X7)m			NEW CONSTRUCTION
PIPE CUL-79	10+235	**(ØXL)**(1X7)m			NEW CONSTRUCTION
PIPE CUL-80	10+430	**(ØXL)**(1X7)m			NEW CONSTRUCTION
PIPE CUL-81	10+575	**(ØXL)**(1X7)m			NEW CONSTRUCTION
PIPE CUL-82	10+620	**(ØXL)**(1X7)m			NEW CONSTRUCTION
PIPE CUL-83	10+687	**(ØXL)**(1X7)m			NEW CONSTRUCTION
PIPE CUL-84	10+720	**(ØXL)**(1X7)m			NEW CONSTRUCTION
BOX CUL-85	10+782	(8X2X12.24)m	**2858.574**	**2857.682**	NEW CONSTRUCTION
PIPE CUL-86	10+935	**(ØXL)**(1X7)m			NEW CONSTRUCTION
PIPE CUL-87	11+045	**(ØXL)**(1X7)m			NEW CONSTRUCTION
PIPE CUL-88	11+175	**(ØXL)**(1X7)m			NEW CONSTRUCTION
PIPE CUL-89	11+275	**(ØXL)**(1X7)m			NEW CONSTRUCTION
PIPE CUL-90	11+400	**(ØXL)**(1X7)m			NEW CONSTRUCTION
BOX CUL-91	11+467	(8X2X11)m	**2842.288**	**2842.52**	NEW CONSTRUCTION
PIPE CUL-92	11+565	**(ØXL)**(1X7)m			NEW CONSTRUCTION
PIPE CUL-93	11+660	**(ØXL)**(1X7)m			NEW CONSTRUCTION
PIPE CUL-94	11+870	**(ØXL)**(1X7)m			NEW CONSTRUCTION
BOX CUL-95	11+970	(2X0.9X7)m	**2836.203**	**2836.305**	NEW CONSTRUCTION
PIPE CUL-96	12+095	**(ØXL)**(1X7)m			NEW CONSTRUCTION
PIPE CUL-97	12+140	**(ØXL)**(1X7)m			NEW CONSTRUCTION
PIPE CUL-98	12+460	**(ØXL)**(1X7)m			NEW CONSTRUCTION
PIPE CUL-99	12+620	**(ØXL)**(1X7)m			NEW CONSTRUCTION
PIPE CUL-100	12+720	**(ØXL)**(1X7)m			NEW CONSTRUCTION
PIPE CUL-101	12+920	**(ØXL)**(1X7)m			NEW CONSTRUCTION
BOX CUL-102	13+050	(2X0.9X7)m	**2819.907**	**2819.908**	NEW CONSTRUCTION
PIPE CUL-103	13+275	**(ØXL)**(1X7)m			NEW CONSTRUCTION
PIPE CUL-104	13+460	**(ØXL)**(1X7)m			NEW CONSTRUCTION
PIPE CUL-105	13+570	**(ØXL)**(1X7)m			NEW CONSTRUCTION

PIPE CUL-106	13+720	**(ØXL)**(1X7)m			NEW CONSTRUCTION
PIPE CUL-107	13+890	**(ØXL)**(1X7)m			NEW CONSTRUCTION
PIPE CUL-108	14+040	**(ØXL)**(1X7)m			NEW CONSTRUCTION
PIPE CUL-109	14+340	**(ØXL)**(1X7)m			NEW CONSTRUCTION
PIPE CUL-110	14+445	**(ØXL)**(1X7)m			NEW CONSTRUCTION
PIPE CUL-111	14+485	**(ØXL)**(1X7)m			NEW CONSTRUCTION
PIPE CUL-112	14+575	**(ØXL)**(1X7)m			NEW CONSTRUCTION
BOX CUL-113	14+805	(2X1.024X7)m	**2790.05**	**2789.837**	NEW CONSTRUCTION
PIPE CUL-114	15+097	**(ØXL)**(1X7)m			NEW CONSTRUCTION
PIPE CUL-115	15+155	**(ØXL)**(1X7)m			NEW CONSTRUCTION
PIPE CUL-116	15+520	**(ØXL)**(1X7)m			NEW CONSTRUCTION
PIPE CUL-117	15+555	**(ØXL)**(1X7)m			NEW CONSTRUCTION
BOX CUL-118	15+805	(4X1.78X7)m	**2779.649**	**2779.089**	NEW CONSTRUCTION
PIPE CUL-119	15+920	**(ØXL)**(1X7)m			NEW CONSTRUCTION
BOX CUL-120	16+060	(2X1.168X7)m	**2780.512**	**2781.072**	NEW CONSTRUCTION
PIPE CUL-121	16+362	**(ØXL)**(1X7)m			NEW CONSTRUCTION
PIPE CUL-122	16+470	**(ØXL)**(1X7)m			NEW CONSTRUCTION
PIPE CUL-123	16+549	**(ØXL)**(1X7)m			NEW CONSTRUCTION
BOX CUL-124	16+790	(4X2X7)m	**2754.541**	**2754.721**	NEW CONSTRUCTION
BOX CUL-125	16+851	(2X1.114X8.602)m	**2754.461**	**2754.033**	NEW CONSTRUCTION
PIPE CUL-126	17+067	**(ØXL)**(1X7)m			NEW CONSTRUCTION
PIPE CUL-127	17+247	**(ØXL)**(1X7)m			NEW CONSTRUCTION
PIPE CUL-128	17+320	**(ØXL)**(1X7)m			NEW CONSTRUCTION
PIPE CUL-129	17+460	**(ØXL)**(1X7)m			NEW CONSTRUCTION
PIPE CUL130	17+588	**(ØXL)**(1X7)m			NEW CONSTRUCTION
PIPE CUL-131	17+705	**(ØXL)**(1X7)m			NEW CONSTRUCTION
PIPE CUL-132	17+760	**(ØXL)**(1X7)m			NEW CONSTRUCTION
PIPE CUL-133	17+945	**(ØXL)**(1X7)m			NEW CONSTRUCTION
PIPE CUL-134	18+124	**(ØXL)**(1X7)m			NEW CONSTRUCTION
BOX CUL135	18+205	(4X1.78X7)m	**2744.807**	**2744.247**	NEW CONSTRUCTION
PIPE CUL-136	18+320	**(ØXL)**(1X7)m			NEW CONSTRUCTION
PIPE CUL-137	18+408	**(ØXL)**(1X7)m			NEW CONSTRUCTION
PIPE CUL-138	18+670	**(ØXL)**(1X7)m			NEW CONSTRUCTION
PIPE CUL-139	18+854	**(ØXL)**(1X7)m			NEW CONSTRUCTION
PIPE CUL-140	19+045	**(ØXL)**(1X7)m			NEW CONSTRUCTION
BOX CUL-141	19+237	(2X0.9X7)m	**2711.815**	**2712.043**	NEW CONSTRUCTION

PIPE CUL-142	19+576	**(ØXL)**(1X7)m			NEW CONSTRUCTION
BOX CUL-143	19+735	(2X0.9X7)m	**2725.931**	**2725.937**	NEW CONSTRUCTION
PIPE CUL-144	19+808	**(ØXL)**(1X7)m			NEW CONSTRUCTION
BOX CUL-145	19+887	(2X1.065X7)m	**2721.772**	**2721.418**	NEW CONSTRUCTION
PIPE CUL-146	20+033	**(ØXL)**(1X7)m			NEW CONSTRUCTION
PIPE CUL-147	20+232	**(ØXL)**(1X7)m			NEW CONSTRUCTION
PIPE CUL-148	20+490	**(ØXL)**(1X7)m			NEW CONSTRUCTION

STRUCTURE SCHEDULE OF (MALISTAN TO KHAS UROZGHAN ROAD)
RETAINING WALL

RET -WALL NO	STATION	SIDE	LENGHT	HEIGHT	REMARK
RW-1	0+260 to 0+310	R.H.S	50m	2.5m	NEW CONSTRUCTION
RW-2	0+310 to 0+400	L.H.S	90m	2.5m	NEW CONSTRUCTION
RW-3	0+585 to 0+610	R.H.S	25m	2.5m	NEW CONSTRUCTION
RW-4	3+020 to 3+060	L.H.S	40m	3m	NEW CONSTRUCTION
RW-5	3+125 to 3+145	L.H.S	20m	4m	NEW CONSTRUCTION
RW-6	3+310 to 3+340	L.H.S	30m	3m	NEW CONSTRUCTION
RW-7	3+460 to 3+520	R.H.S	60m	3m	NEW CONSTRUCTION
RW-8	3+815 to 3+850	L.H.S	35m	4m	NEW CONSTRUCTION
RW-9	4+470 to 4+485	R.H.S	15m	3m	NEW CONSTRUCTION
RW-10	4+605 to 4+625	R.H.S	20m	3m	NEW CONSTRUCTION
RW-11	5+885 to 6+045	R.H.S	160m	4.9m	NEW CONSTRUCTION
RW-12	12+152 to12+177	L.H.S	25m	4m	NEW CONSTRUCTION
RW-13	13+007 to 13+038	L.H.S	31m	4m	NEW CONSTRUCTION
RW-14	14+330 to 14+355	L.H.S	25m	5m	NEW CONSTRUCTION
RW-15a	14+430 to 14+440	L.H.S	10m	3m	NEW CONSTRUCTION
RW-15b	14+440 to 14+460	L.H.S	20m	4m	NEW CONSTRUCTION
RW-16	14+565 to14+605	L.H.S	40m	4.9m	NEW CONSTRUCTION
RW-17	15+645 to 15+725	L.H.S	80m	4.9m	NEW CONSTRUCTION
RW-18	16+270 to 16+325	L.H.S	55m	4.9m	NEW CONSTRUCTION
RW-19	16+370 to 16+430	L.H.S	60m	4.9m	NEW CONSTRUCTION
RW-20	16+780 to 16+790	L.H.S	10m	4.9m	NEW CONSTRUCTION
RW-21	17+470 to 17+520	L.H.S	50m	4.9m	NEW CONSTRUCTION
RW-22	17+630 to 17+700	L.H.S	70m	4m	NEW CONSTRUCTION
RW-23	19+010 to 19+060	L.H.S	50m	4.9m	NEW CONSTRUCTION
RW-24	19+620 to 19+660	L.H.S	40m	4.9m	NEW CONSTRUCTION
RW-25	19+710 to 19+800	L.H.S	90m	4.9m	NEW CONSTRUCTION
RW-26	20+380 to 20+695	L.H.S	315m	4.9m	NEW CONSTRUCTION
RW-27	20+820 to 20+860	L.H.S	40m	4.9m	NEW CONSTRUCTION
RW-28	20+940 to 20+960	L.H.S	20m	4.9m	NEW CONSTRUCTION

STRUCTURE SCHEDULE OF (MALISTAN TO KHAS UROZGHAN ROAD)
CAUSE WAY

CAUSE WAY NO	STATION	LENGHT	REMARK
CW-1	11+098 to 11+153	55m	NEW CONSTRUCTION
CW-2	11+705 to 11+765	60m	NEW CONSTRUCTION
CW-3	14+114 to 14+139	25m	NEW CONSTRUCTION

LINED SIDE DRAIN FOR SOIL CUT

LSD NO	TYPE	STATION		LENGHT	SIDE	REMARKS
		START	END			
1	SM	0+000	0+190	190m	LEFT	NEW CONSTRUCTION
2	SM	0+400	0+495	95m	LEFT	NEW CONSTRUCTION
3	SM	0+310	0+560	250m	RIGHT	NEW CONSTRUCTION
4	SM	0+585	0+615	30m	LEFT	NEW CONSTRUCTION
5	SM	0+630	0+680	50m	LEFT	NEW CONSTRUCTION
6	SM	0+630	0+700	70m	RIGHT	NEW CONSTRUCTION
7	SM	0+760	1+100	340m	RIGHT	NEW CONSTRUCTION
8	SM	1+500	1+615	115m	RIGHT	NEW CONSTRUCTION
9	SM	1+760	1+855	95m	RIGHT	NEW CONSTRUCTION
10	SM	1+870	1+960	90m	RIGHT	NEW CONSTRUCTION
11	SM	2+060	2+410	350m	RIGHT	NEW CONSTRUCTION
12	SM	2+100	2+220	160m	LEFT	NEW CONSTRUCTION
13	SM	2+440	2+500	60m	RIGHT	NEW CONSTRUCTION
14	SM	2+520	2+620	100m	LEFT	NEW CONSTRUCTION
15	SM	2+520	3+300	780m	RIGHT	NEW CONSTRUCTION
16	SM	3+330	3+450	120m	RIGHT	NEW CONSTRUCTION
17	SM	3+350	3+450	100m	LEFT	NEW CONSTRUCTION
18	SM	3+465	3+760	295m	LEFT	NEW CONSTRUCTION
19	SM	3+700	4+000	300m	RIGHT	NEW CONSTRUCTION
20	SM	3+860	5+150	1290m	LEFT	NEW CONSTRUCTION
21	SM	4+060	4+110	50m	RIGHT	NEW CONSTRUCTION
22	SM	4+150	4+280	130m	RIGHT	NEW CONSTRUCTION
23	SM	4+300	4+460	160m	RIGHT	NEW CONSTRUCTION
24	SM	5+300	5+580	280m	LEFT	NEW CONSTRUCTION
25	SM	5+680	5+820	140m	LEFT	NEW CONSTRUCTION
26	SM	5+880	6+200	120m	LEFT	NEW CONSTRUCTION
27	SM	6+600	6+820	120m	LEFT	NEW CONSTRUCTION
28	SM	7+100	7+300	200m	LEFT	NEW CONSTRUCTION
29	SM	7+480	8+380	900m	LEFT	NEW CONSTRUCTION
30	SM	8+740	8+880	140m	RIGHT	NEW CONSTRUCTION
31	SM	9+340	10+060	720m	RIGHT	NEW CONSTRUCTION
32	SM	10+120	10+420	300m	RIGHT	NEW CONSTRUCTION
33	SM	10+640	10+700	60m	RIGHT	NEW CONSTRUCTION
34	SM	11+060	11+100	40m	LEFT	NEW CONSTRUCTION
35	SM	11+160	11+400	240m	LEFT	NEW CONSTRUCTION
36	SM	11+460	11+600	140m	LEFT	NEW CONSTRUCTION
37	SM	11+800	14+500	2700m	RIGHT	NEW CONSTRUCTION
38	SM	14+600	16+040	1440m	RIGHT	NEW CONSTRUCTION
39	SM	15+820	15+880	60m	LEFT	NEW CONSTRUCTION
40	SM	16+100	16+780	680m	RIGHT	NEW CONSTRUCTION
41	SM	16+880	17+260	380m	RIGHT	NEW CONSTRUCTION
42	SM	17+460	18+180	720m	RIGHT	NEW CONSTRUCTION
43	SM	18+240	19+800	1560m	RIGHT	NEW CONSTRUCTION
44	SM	20+040	21+020	980m	RIGHT	NEW CONSTRUCTION

International Relief and Development Inc. (IRD)

STRATEGIC PROVINCIAL ROADS
SOUTHERN AND EASTERN AFGHANISTAN (SPR - SEA)
DAY KUNDI TO GIZAB ROAD PROJECT (#39)
SECTION-1a

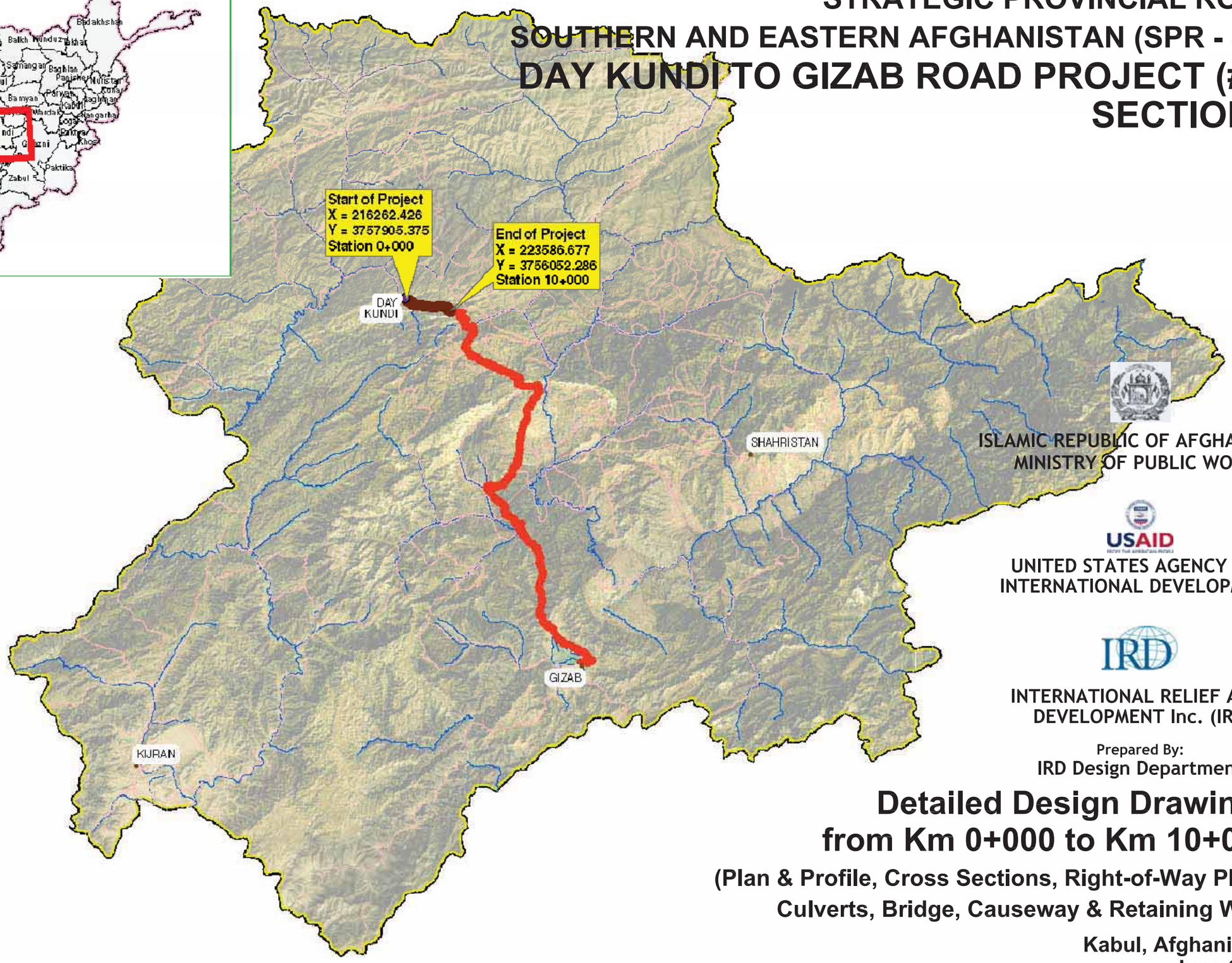

ISLAMIC REPUBLIC OF AFGHANISTAN
MINISTRY OF PUBLIC WORKS

UNITED STATES AGENCY FOR INTERNATIONAL DEVELOPMENT

INTERNATIONAL RELIEF AND DEVELOPMENT Inc. (IRD)

Prepared By:
IRD Design Department

Detailed Design Drawings from Km 0+000 to Km 10+000

(Plan & Profile, Cross Sections, Right-of-Way Plan, Culverts, Bridge, Causeway & Retaining Wall)

Kabul, Afghanistan
June 2010

TYPICAL SECTION FOR TEMPORARY ROADS # 37 & # 39

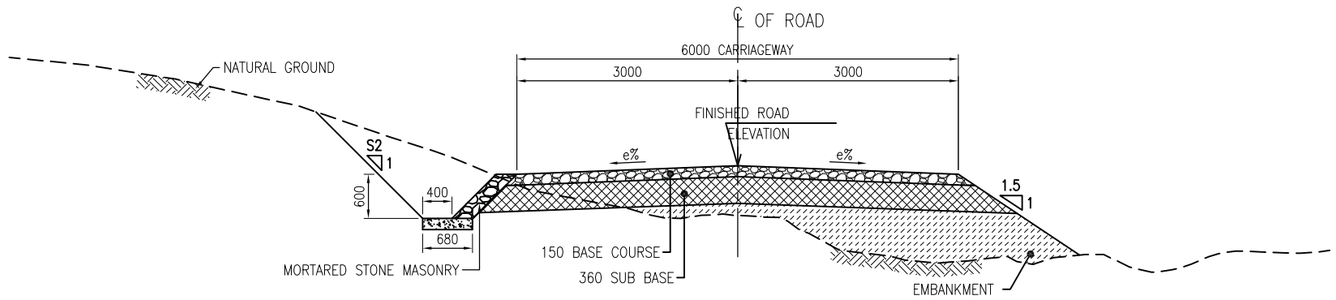

1 ROAD SECTION IN EARTHEN CUTS

SCALE NTS

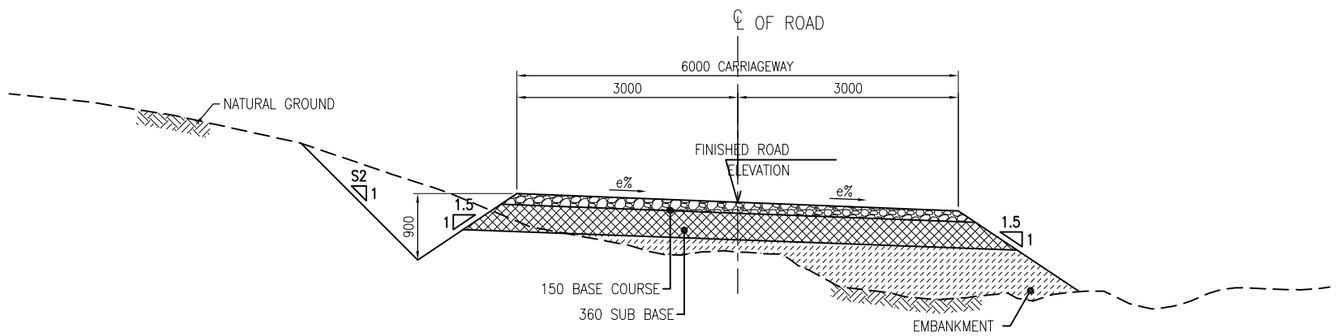

2 SUPERELEVATED ROAD SECTION

SCALE NTS

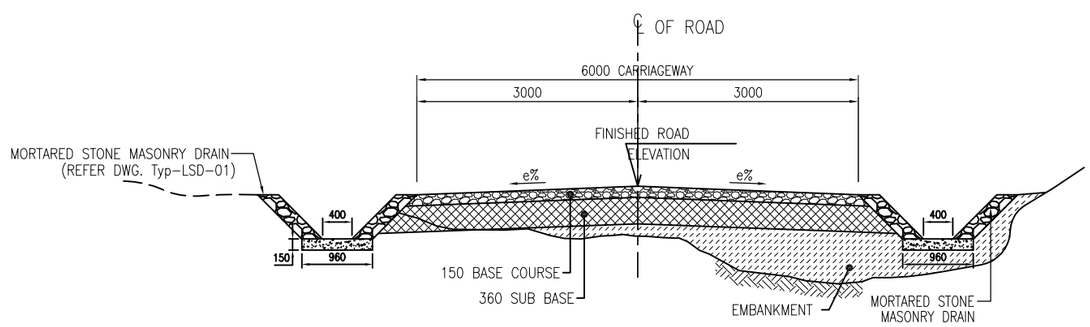

3 ROAD SECTION IN URBAN AREA WITH DRAINS (OUTSIDE)

SCALE NTS

TABLE OF CUT AND FILL SLOPES	
HEIGHT	SLOPES
FOR FILL ≤ 3.0m	1.5 H : 1.0 V
FOR FILL ≥ 3.0m	1.5 H : 1.0 V
FOR CUT (S2)	1.0 H : 1.0 V (SOIL MATERIALS) 1.0 H : 2.5 V (ALL TYPES OF ROCK)

150 BASE COURSE

(CBR MIN. ≥ 80, AASHTO T 193 AT 100% COMPACTION, AASHTO T-180) METHOD D.

360 SUB BASE

(CBR MIN. ≥ 25, AASHTO T 193 AT 100% COMPACTION, AASHTO T-180) METHOD D.

NOTE:

1. THE SUPERELEVATION RATE (e) IS SHOWN ON PLANS & PROFILES FOR EACH HORIZONTAL CURVE. THE SUPER ELEVATION IS SHOWN IN CROSS SECTIONS AT EVERY 20m INTERVALS
   SEE (DWG. NO. Typ-RD-02) FOR THE METHOD OF APPLICATION.
2. UNSUITABLE MATERIALS SHALL BE REMOVED AS DIRECTED BY THE ENGINEER AND SHALL BE REPLACED WITH SUITABLE BACKFILL MATERIALS.
3. THE CONTRACTOR MAY SECURE APPROVAL FROM THE ENGINEER TO FLATTEN CUT SLOPES TO OBTAIN ADDITIONAL EMBANKMENT MATERIAL.
4. EXPOSED SUBGRADE SHALL BE COMPACTED TO AT LEAST 98% OF THE MAXIMUM MODIFIED PROCTOR DENSITY IN ACCORDANCE WITH AASHTO T180-95.
5. IN ROCK CUT SECTIONS, EXCAVATE 150mm BELOW SUBGRADE LEVEL AND REPLACE WITH TOPPING MATERIAL OR WITH OTHER SUITABLE MATERIAL (CBR ≥ 8).
6. REFER DWG NO. Typ-LSD-01 FOR TYPICAL PLAN & SECTION OF LINED SIDE DRAIN.
7. ALL DIMENSIONS ARE IN MILLIMETERS UNLESS OTHERWISE SHOWN.

ISLAMIC REPUBLIC OF AFGHANISTAN AND UNITED STATES AGENCY FOR INTERNATIONAL DEVELOPMENT	INTERNATIONAL RELIEF & DEVELOPMENT AND NATIONAL GENERAL CONSTRUCTION COMPANY	DESIGN OF DAY KHUNDI TO GHIZAB ROAD	SHEET CONTENTS	NAMES	SIGNATURE	DATE	SHEET NO.	REVISION	DATE
			TYPICAL ROAD CROSS SECTION	DESIGNED :			TYP-RD-01	FIRST ISSUE	JUNE,09
				DRAWN :					
				CHECKED :			SCALE:		
				APPROVED:			AS SHOWN		

CULVERT STRUCTURES SCHEDULE

CULVERT NO.	STATION	TYPE (H x W, m)	REMARKS
CUL-01	0+020	H x 1	NEW CONSTRUCTION
CUL-02	0+124	2 x 4	NEW CONSTRUCTION
CUL-03	0+226	H x 1	NEW CONSTRUCTION
CUL-04	0+323	H x 1	NEW CONSTRUCTION
CUL-05	0+446	H x 1	NEW CONSTRUCTION
CUL-06	0+500	H x 1	NEW CONSTRUCTION
CUL-07	0+529	H x 1	NEW CONSTRUCTION
CUL-08	0+578	H x 1	NEW CONSTRUCTION
CUL-09	0+642	H x 1	NEW CONSTRUCTION
CUL-10	0+852	H x 2	NEW CONSTRUCTION
CUL-11	1+046	H x 1	NEW CONSTRUCTION
CUL-12	1+191	H x 1	NEW CONSTRUCTION
CUL-13	1+358	H x 1	NEW CONSTRUCTION
CUL-14	1+500	H x 1	NEW CONSTRUCTION
CUL-15	1+580	H x 1	NEW CONSTRUCTION
CUL-16	1+700	H x 1	NEW CONSTRUCTION
CUL-17	1+922	H x 1	NEW CONSTRUCTION
CUL-18	2+016	H x 1	NEW CONSTRUCTION
CUL-19	2+084	H x 1	NEW CONSTRUCTION
CUL-20	2+230	H x 1	NEW CONSTRUCTION
CUL-21	2+465	H x 1	NEW CONSTRUCTION
CUL-22	2+500	H x 1	NEW CONSTRUCTION
CUL-23	2+557	H x 2	NEW CONSTRUCTION
CUL-24	2+626	H x 1	NEW CONSTRUCTION
CUL-25	2+670	H x 1	NEW CONSTRUCTION
CUL-26	2+731	H x 1	NEW CONSTRUCTION
CUL-27	2+902	H x 1	NEW CONSTRUCTION
CUL-28	2+934	2.373 x 4	NEW CONSTRUCTION
CUL-29	3+000	H x 1	NEW CONSTRUCTION
CUL-30	3+060	H x 1	NEW CONSTRUCTION
CUL-31	3+300	H x 1	NEW CONSTRUCTION
CUL-32	3+500	H x 1	NEW CONSTRUCTION
CUL-33	3+627	H x 1	NEW CONSTRUCTION
CUL-34	3+716	H x 1	NEW CONSTRUCTION
CUL-35	3+797	H x 1	NEW CONSTRUCTION
CUL-36	3+869	H x 1	NEW CONSTRUCTION
CUL-37	4+064	H x 1	NEW CONSTRUCTION
CUL-38	4+227	H x 1	NEW CONSTRUCTION
CUL-39	4+333	H x 1	NEW CONSTRUCTION
CUL-40	4+458	H x 2	NEW CONSTRUCTION

CULVERT STRUCTURES SCHEDULE

CULVERT NO.	STATION	TYPE (H x W, m)	REMARKS
CUL-41	4+495	H x 1	NEW CONSTRUCTION
CUL-42	4+668	H x 1	NEW CONSTRUCTION
CUL-43	4+733	H x 1	NEW CONSTRUCTION
CUL-44	4+790	H x 1	NEW CONSTRUCTION
CUL-45	4+857	H x 1	NEW CONSTRUCTION
CUL-46	4+912	H x 1	NEW CONSTRUCTION
CUL-47	4+986	H x 1	NEW CONSTRUCTION
CUL-48	5+065	H x 2	NEW CONSTRUCTION
CUL-49	5+191	H x 1	NEW CONSTRUCTION
CUL-50	5+343	H x 1	NEW CONSTRUCTION
CUL-51	5+392	H x 2	NEW CONSTRUCTION
CUL-52	5+531	H x 2	NEW CONSTRUCTION
CUL-53	5+833	H x 1	NEW CONSTRUCTION
CUL-54	5+968	H x 1	NEW CONSTRUCTION
CUL-55	6+102	H x 2	NEW CONSTRUCTION
CUL-56	6+191	H x 1	NEW CONSTRUCTION
CUL-57	6+392	H x 1	NEW CONSTRUCTION
CUL-58	6+494	H x 1	NEW CONSTRUCTION
CUL-59	6+620	2.12 x 4	NEW CONSTRUCTION
CUL-60	6+706	H x 1	NEW CONSTRUCTION
CUL-61	6+754	H x 2	NEW CONSTRUCTION
CUL-62	7+016	H x 1	NEW CONSTRUCTION
CUL-63	7+141	H x 1	NEW CONSTRUCTION
CUL-64	7+235	H x 1	NEW CONSTRUCTION
CUL-65	7+619	H x 1	NEW CONSTRUCTION
CUL-66	7+700	H x 1	NEW CONSTRUCTION
CUL-67	7+792	H x 2	NEW CONSTRUCTION
CUL-68	7+864	H x 1	NEW CONSTRUCTION
CUL-69	7+881	H x 1	NEW CONSTRUCTION
CUL-70	7+906	H x 2	NEW CONSTRUCTION
CUL-71	7+998	H x 1	NEW CONSTRUCTION
CUL-72	8+116	H x 1	NEW CONSTRUCTION
CUL-73	8+262	H x 1	NEW CONSTRUCTION
CUL-74	8+389	H x 1	NEW CONSTRUCTION
CUL-75	8+504	H x 1	NEW CONSTRUCTION
CUL-76	8+600	H x 1	NEW CONSTRUCTION
CUL-77	8+643	H x 1	NEW CONSTRUCTION
CUL-78	8+790	H x 1	NEW CONSTRUCTION
CUL-79	8+822	H x 1	NEW CONSTRUCTION
CUL-80	9+130	H x 1	NEW CONSTRUCTION

CULVERT STRUCTURES SCHEDULE

CULVERT NO.	STATION	TYPE (H x W, m)	REMARKS
CUL-81	9+232	H x 1	NEW CONSTRUCTION
CUL-82	9+410	H x 1	NEW CONSTRUCTION
CUL-83	9+500	H x 1	NEW CONSTRUCTION
CUL-84	9+611	H x 1	NEW CONSTRUCTION
CUL-85	9+700	H x 1	NEW CONSTRUCTION
CUL-86	9+757	H x 1	NEW CONSTRUCTION
CUL-87	9+800	H x 1	NEW CONSTRUCTION
CUL-88	9+877	H x 1	NEW CONSTRUCTION
CUL-89	10+000	H x 1	NEW CONSTRUCTION

BRIDGE

BRIDGE NO.	STATION	TYPE (H x W, m)	REMARKS
BRI-01	05+417	2 x 6	NEW CONSTRUCTION

CAUSEWAY

CAUSEWAY NO.	STATION		LENGTH (m)	REMARKS
	START	END		
CW-1	04+158	04+183	L=25m	NEW CONSTRUCTION

NOTE:
1. `H' WILL BE DESIGNED AS PER SITE CONDITIONS.
2. MINIMUM HEIGHT (H) OF THE DRAINAGE STRUCTURE IS 0.9m.
3. `H' REFERS TO TYPICAL STRUCTURAL DRAWINGS.
4. THE SUITABLE LOCATION & ANGLE OF CULVERTS & BRIDGES WILL BE DETERMINED AS PER SITE CONDITIONS AND APPROVED BY SITE ENGINEER.

GENERAL NOTES:

STRUCTURES:-

LOCATIONS OF ALL STRUCTURES ARE PRELIMINARY. EXACT LOCATIONS SHALL BE DETERMINED BY THE CONTRACTOR ON SITE. HYDROLOGICAL ASSUMPTIONS AND OPENINGS OF DRAINAGE STRUCTURES SHALL BE VERIFIED IN THE FIELD BY THE CONTRACTOR. SLOPES, INLET AND OUTLET STRUCTURES AND INVERT ELEVATIONS SHALL BE DESIGNED BY CONTRACTOR.

CONTRACTOR SHALL DESIGN AND SUBMIT SHOP DRAWINGS SHOWING ITEM OF WORKS AND ITS CORRESPONDING QUANTITIES FOR THE ENGINEERS REVIEW PRIOR TO ANY COMMENCEMENT OF CONSTRUCTION WORK.

FOR ALL SKEWED CULVERTS, HEADWALLS AND END OF CULVERTS SHALL BE PARALLEL TO THE ROAD CENTERLINE.

REFER TO THE FOLLOWING DRAWINGS FOR STANDARD DETAILS:

DG - RD - 01 TYPICAL ROAD CROSS SECTIONS
DG - CUL - Typ - 1m - 01 - 04 TYPICAL BOX CULVERT (1 METER SPAN) 1 CELL
DG - CUL - Typ - 1m - 01 - 06 TYPICAL BOX CULVERT - SKEW - LEFT (TYPICAL 1 METER SPAN) 1 CELL
DG - CUL - Typ - 2m - 01 - 04 TYPICAL BOX CULVERT (2 METER SPAN) 1 CELL
DG - CUL - Typ - 2m - 01 - 06 TYPICAL BOX CULVERT - SKEW - LEFT (2 METER SPAN) 1 CELL
DG - CUL - Typ - 4m - 01 - 05 TYPICAL BOX CULVERT (4 METER SPAN) 1 CELL
DG - BRI - Typ - 6m - 01 - 07 TYPICAL SLAB BRIDGE (6 METER SPAN) 1 CELL
DG - BRI - Typ - 8m - 01 - 07 TYPICAL SLAB BRIDGE (8 METER SPAN) 1 CELL
DG - Typ - EP - 01 - 01 BOX CULVERT - (TYPICAL SECTION OF EMBANKMENT AND PAVEMENT)
DG - CW - Typ1 - FT - 01 - 02 TYPICAL CAUSEWAY (TYPE 1 - FLAT + ROLLING TERRAIN)
DG - CW - Typ2 - MT - 01- 02 TYPICAL CAUSEWAY (TYPE 2 - MOUNTAINOUS TERRAIN)
DG - CW - Typ3 - MT - 01- 02 TYPICAL CAUSEWAY (TYPE 3 - MOUNTAINOUS TERRAIN)
DG - Typ - GA - 01 GENERAL ARRANGEMENT OF GRATING
DG - Typ - LSD - 01 - 02 TYPICAL LINED SIDE DRAINS
DG - Typ - RW - 01 TYPICAL RETAINING WALL
DG - Typ - SP - 01 TYPICAL SLOPE PROTECTION

ROAD INTERSECTIONS AND ACCESS TO PRIVATE PROPERTIES:-

INTERSECTING ROAD AND ACCESS TO PRIVATE PROPERTIES SHALL BE PROVIDED WITH BOX CULVERT OR PIPE CULVERT WITH INVERT ELEVATION MATCHING ROADWAY DITCHES SO AS NOT TO OBSTRUCT THE WATER FLOW AS DIRECTED BY THE ENGINEER. REFER TO DWG. NO. DG-RD-04 FOR TYPICAL INTERSECTION DETAILS.

STRUCTURES SCHEDULE

LINED SIDE DRAIN

LINED SIDE DRAIN No.	SIDE	TYPE	STATION		LENGTH (m)	REMARKS
			FROM	TO		
LSD-01	RHS	TYPE-4	0+140	0+190	L=50	NEW CONSTRUCTION
LSD-01	LHS	TYPE-4	0+175	0+190	L=15	NEW CONSTRUCTION
LSD-02	LHS	TYPE-4	0+446	0+578	L=132	NEW CONSTRUCTION
LSD-02	RHS	TYPE-4	0+555	0+578	L=23	NEW CONSTRUCTION
LSD-02	LHS	TYPE-3	0+430	0+446	L=16	NEW CONSTRUCTION
LSD-03	LHS	TYPE-4	1+360	1+470	L=110	NEW CONSTRUCTION
LSD-04	LHS	TYPE-4	1+500	1+780	L=280	NEW CONSTRUCTION
LSD-05	LHS	TYPE-4	2+030	2+080	L=50	NEW CONSTRUCTION
LSD-06	LHS	TYPE-4	3+100	3+716	L=616	NEW CONSTRUCTION
LSD-07	LHS	TYPE-4	3+870	4+060	L=190	NEW CONSTRUCTION
LSD-08	LHS	TYPE-4	4+183	4+280	L=97	NEW CONSTRUCTION
LSD-08	RHS	TYPE-4	4+183	4+280	L=97	NEW CONSTRUCTION
LSD-09	RHS	TYPE-4	4+333	4+430	L=97	NEW CONSTRUCTION
LSD-10	RHS	TYPE-4	4+550	4+790	L=240	NEW CONSTRUCTION
LSD-10	RHS	TYPE-4	4+790	4+865	L=75	NEW CONSTRUCTION
LSD-11	RHS	TYPE-4	4+895	4+912	L=17	NEW CONSTRUCTION
LSD-12	RHS	TYPE-4	4+970	5+125	L=155	NEW CONSTRUCTION
LSD-13	RHS	TYPE-4	5+235	5+315	L=80	NEW CONSTRUCTION
LSD-14	LHS	TYPE-4	5+460	5+600	L=140	NEW CONSTRUCTION
LSD-14	RHS	TYPE-4	5+460	5+590	L=130	NEW CONSTRUCTION
LSD-15	LHS	TYPE-4	5+650	6+605	L=955	NEW CONSTRUCTION
LSD-16	RHS	TYPE-4	6+685	7+880	L=1195	NEW CONSTRUCTION
LSD-16	LHS	TYPE-4	7+300	7+630	L=330	NEW CONSTRUCTION
LSD-16	RHS	TYPE-4	7+870	7+940	L=70	NEW CONSTRUCTION
LSD-17	LHS	TYPE-4	8+003	8+470	L=467	NEW CONSTRUCTION
LSD-17	RHS	TYPE-4	8+400	8+780	L=380	NEW CONSTRUCTION
LSD-17	LHS	TYPE-4	8+700	8+780	L=80	NEW CONSTRUCTION
LSD-18	LHS	TYPE-4	8+840	9+090	L=250	NEW CONSTRUCTION
LSD-18	RHS	TYPE-4	8+860	8+885	L=25	NEW CONSTRUCTION
LSD-18	RHS	TYPE-4	8+930	9+600	L=670	NEW CONSTRUCTION
LSD-18	LHS	TYPE-4	9+515	9+600	L=85	NEW CONSTRUCTION
LSD-19	LHS	TYPE-4	9+670	9+850	L=180	NEW CONSTRUCTION
LSD-19	RHS	TYPE-4	9+760	10+000	L=240	NEW CONSTRUCTION

NOTE:
REFER DWG.NO. DG-LSD, SHEET 1 & 2 FOR TYPICAL LINED SIDE DRAIN DRAWING DETAILS.

RETAINING WALL

RETAINING WALL NO.	SIDE	TYPE	STATION		LENGTH (m)	REMARKS
			FROM	TO		
RW-01	RHS	SM	3+383	3+417	34	NEW CONSTRUCTION

STRUCTURES SCHEDULE

SLOPE PROTECTION

SLOPE PROTECTION NO.	SIDE	TYPE	STATION		LENGTH (m)	REMARKS
			FROM	TO		
SP-01	LHS	SM	2+370	2+500	L=130	NEW CONSTRUCTION
SP-01	LHS	SM	3+060	3+100	L=40	NEW CONSTRUCTION
SP-02	RHS	SM	4+865	4+895	L=30	NEW CONSTRUCTION
SP-03	RHS	SM	4+912	4+970	L=58	NEW CONSTRUCTION
SP-04	RHS	SM	5+125	5+235	L=110	NEW CONSTRUCTION
SP-05	RHS	SM	5+315	5+360	L=45	NEW CONSTRUCTION
SP-06	LHS	SM	5+600	5+650	L=50	NEW CONSTRUCTION
SP-07	LHS	SM	6+605	6+620	L=15	NEW CONSTRUCTION
SP-08	RHS	SM	6+650	6+685	L=35	NEW CONSTRUCTION

NOTE:
THE EXACT LOCAITONS OF SLOPE PROTECTION WILL BE DETERMIND BY SUB CONTRACTOR AS PER SITE CONDTION, REFER TO DWG.NO. DG-SP-01 FOR TYPICAL SLOPE PROTECTION DRAWING DETAILS.

TYPICAL DIMENSIONS OF ABUTMENT - 6m BRIDGE		
SL. NO.	H (m)	B (m)
1	1.00	1.90
2	>1.00–1.50	2.00
3	>1.50–2.00	2.20
4	>2.00–2.50	2.40
5	>2.50–3.00	2.60
6	>3.00–3.50	2.80
7	>3.50–4.00	3.00

TYPICAL DIMENSIONS OF WING WALL - 6m BRIDGE		
SL. NO.	h (m)	L (m)
1	1.00	1.10
2	>1.00–1.50	1.30
3	>1.50–2.00	1.50
4	>2.00–2.50	1.70
5	>2.50–3.00	1.90
6	>3.00–3.50	2.10
7	>3.5–4.00	2.30

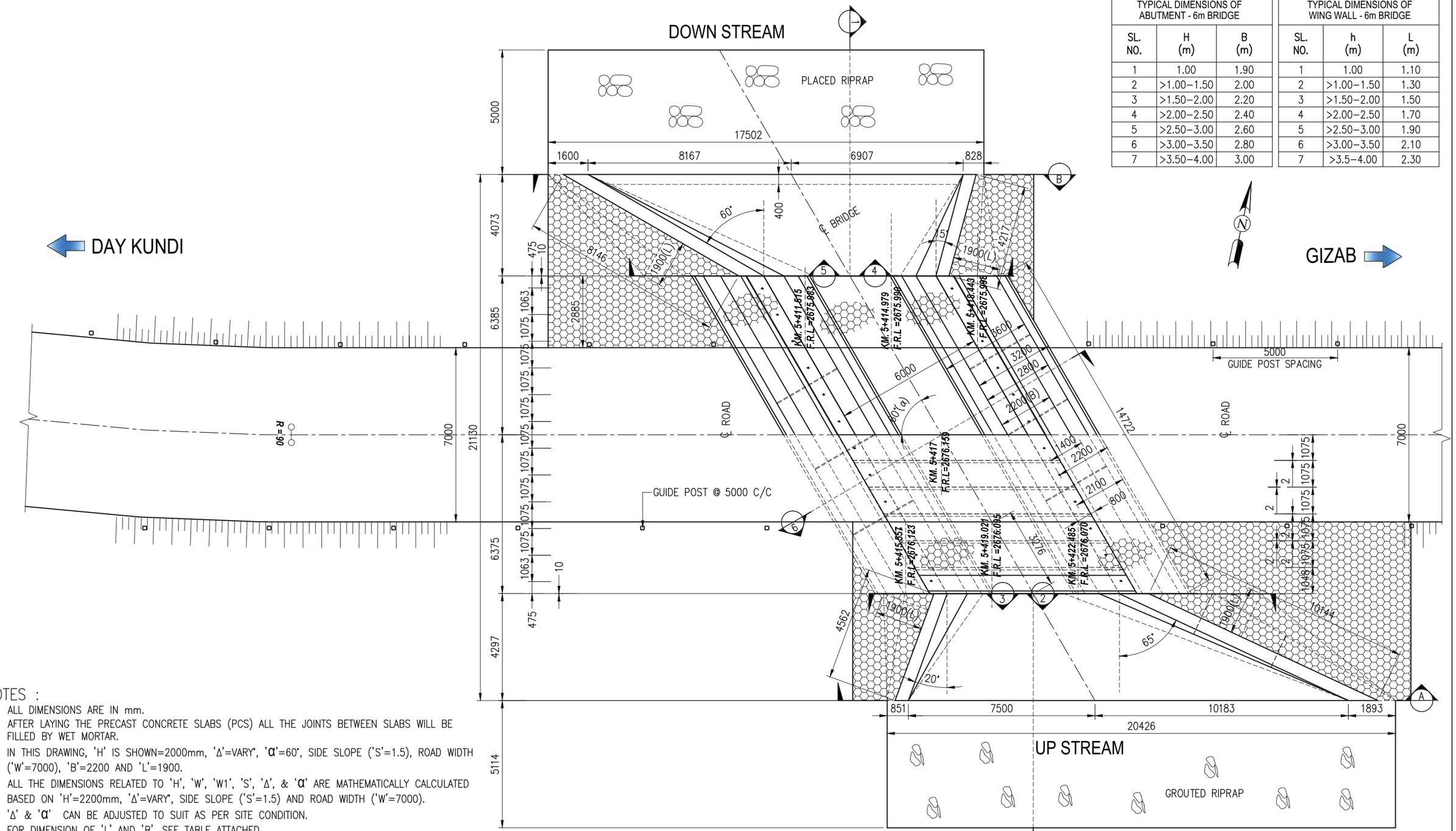

1 PLAN

SCALE 1:150 M

NOTES :

1. ALL DIMENSIONS ARE IN mm.
2. AFTER LAYING THE PRECAST CONCRETE SLABS (PCS) ALL THE JOINTS BETWEEN SLABS WILL BE FILLED BY WET MORTAR.
3. IN THIS DRAWING, 'H' IS SHOWN=2000mm, 'Δ'=VARY', 'α'=60°, SIDE SLOPE ('S'=1.5), ROAD WIDTH ('W'=7000), 'B'=2200 AND 'L'=1900.
4. ALL THE DIMENSIONS RELATED TO 'H', 'W', 'W1', 'S', 'Δ', & 'α' ARE MATHEMATICALLY CALCULATED BASED ON 'H'=2200mm, 'Δ'=VARY', SIDE SLOPE ('S'=1.5) AND ROAD WIDTH ('W'=7000).
5. 'Δ' & 'α' CAN BE ADJUSTED TO SUIT AS PER SITE CONDITION.
6. FOR DIMENSION OF 'L' AND 'B', SEE TABLE ATTACHED.
7. FOR DESIGN CALCULATIONS, VELOCITY OF FLOW IS LESS THAN 2m/Sec.
8. THE PROPER CHAINAGE OF CULVERT WILL BE DETERMINED ON SITE.
9. THE ALLOWABLE BEARING PRESSURE OF SOIL=200 KN/m² (MIN) IS ASSIGNED FOR DESIGN.
10. ALL DIMENSIONS THAT RELATE TO 'H', 'B','L','h','Δ','α','S' WILL BE REVISED FOR SPECIFIED DESIGN.
11. CULVERT LENGTH IN SKEW (W1=W/Sin α)

ISLAMIC REPUBLIC OF AFGHANISTAN AND UNITED STATES AGENCY FOR INTERNATIONAL DEVELOPMENT	STRATEGIC PROVINCIAL ROADS SOUTHERN AND EASTERN AFGHANISTAN INTERNATIONAL RELIEF & DEVELOPMENT, INC.	DAIKUNDI TO GIZAB ROAD PROJECT # 39 SECTION-1a	SHEET CONTENTS	NAMES	SIGNATURE	DATE	SHEET NO.	REVISION	DATE
			PLAN OF SLAB BRIDGE AT Km 5+417	DESIGNED : MY TAN NGUYEN			DG-BR-01 Sheet - 1/9	FIRST ISSUE	JUN 10
				DRAWN : MOHAMMAD SAYED HASHIMI					
				CHECKED : M. MUSA SHARIFI			SCALE:		
				APPROVED: ANDREY AVANOV			AS SHOWN		

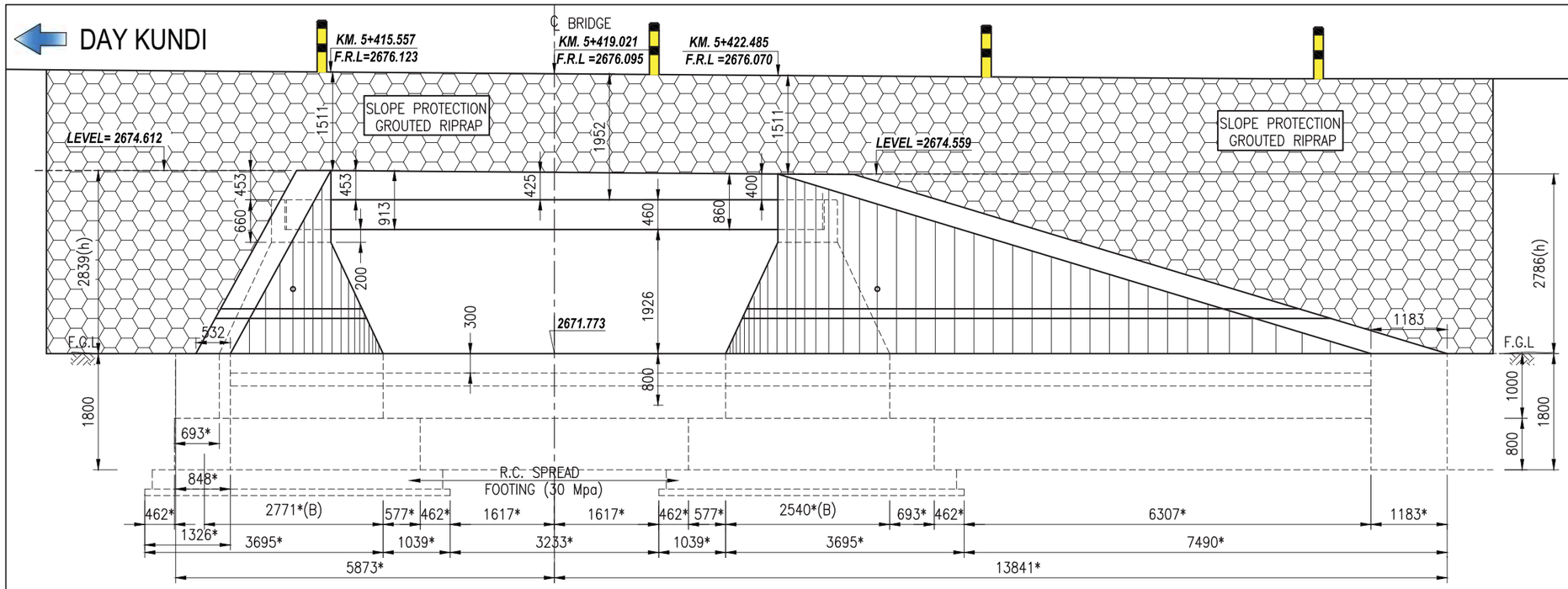

2 VIEW A - A (U/S)

SCALE 1:80 M

* DIMENSIONS ARE IN SKEW ONLY, FOR PERPENDICULAR DIMENSIONS REFER TO SHEET No.1 AND SECTION 6–6, ON SHEET No.3.

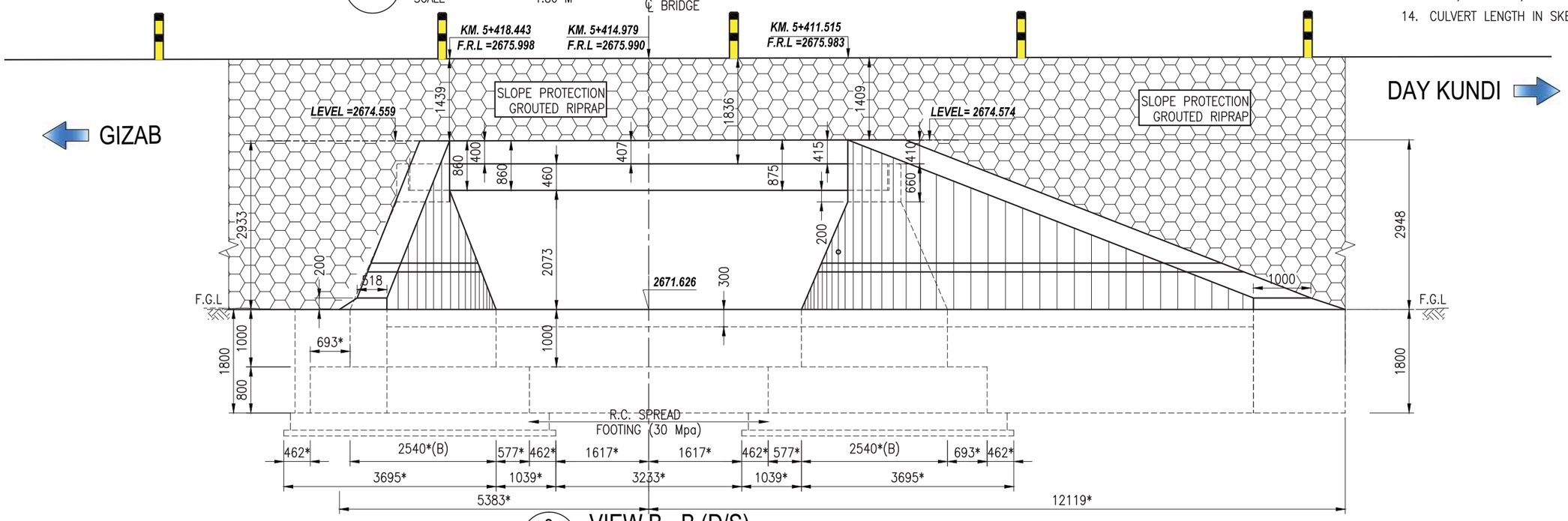

3 VIEW B - B (D/S)

SCALE 1:80 M

* DIMENSIONS ARE IN SKEW ONLY, FOR PERPENDICULAR DIMENSIONS REFER TO SHEET No.1 AND SECTION 6–6, ON SHEET No.3.

NOTES :

1. ALL DIMENSIONS ARE IN mm.
2. BASED ON THE DESIGNED CROSS FALL OF SURFACE ROAD THIS DIMENSION WILL BE ADJUSTABLE TO DRAIN THE WATER ROM ROAD SURFACE AND THE THICKNESS IS 100mm MIN.
3. AFTER LAYING THE PRECAST CONCRETE SLABS (PCS) ALL THE JOINTS BETWEEN SLABS WILL BE FILLED BY WET MORTAR.
4. COVER CONCRETE FOR REINFORCEMENT IS 30mm, EXCEPT FOR RC FOOTING IS 80mm.
5. CONCRETE CLASS M30 Mpa.
6. REINFORCEMENT IS DEFORMED BAR, HOT ROLLED, GRADE 60.
7. BEFORE LAYING THE PRECAST SLABS, THIN LAYER OF 5mm WET MORTAR WILL BE LAID ON THE SEAT CHAIR FOR LEVELING.
8. BEFORE CONSTRUCTING THE STONE MASONRY ON GROUND, 150 mm THICK GROUND UNDERNEATH WILL BE COMPACTED TO 95% (MIN) DENSITY.
9. MORTAR USED IN STONE MASONRY HAS MIN. STRENGTH IS 15Mpa AT 28 DAYS. (1 VOL : CEMENT, 3 VOL : SAND PROPOSED)
10. IN THIS DRAWING, 'H' IS SHOWN=2000MM, 'Δ'=VARY°, 'α'=60°, SIDE SLOPE ('S'=1.5), ROAD WIDTH ('W'=7000), 'B'=2200 AND 'L'=1900.
11. ALL THE DIMENSIONS RELATED TO 'H', 'W', 'W1', 'S', 'Δ' , 'α', ARE MATHEMATICALLY CALCULATED BASED ON 'H'=2000MM, 'Δ'=VARY°,'α'=60°, SIDE SLOPE ('S'=1.5) AND ROAD WIDTH ('W'=7000).
12. ALL DIMENSIONS THAT RELATE TO 'H', 'B','L','h','Δ','α','S' WILL BE REVISED FOR SPECIFIED DESIGN.
13. FOR QUANTITY CALCULATIONS, 'H' IS 2.0m, 'B' IS 2.2m, 'L' IS 1.9m, 'Δ'=VARY°,'α'=60° & 'S' IS 1.5
14. CULVERT LENGTH IN SKEW (W1=W/Sin α)

TYPICAL DIMENSIONS OF WING WALL - 6m BRIDGE

SL. NO.	h (m)	L (m)
1	1.00	1.10
2	>1.00–1.50	1.30
3	>1.50–2.00	1.50
4	>2.00–2.50	1.70
5	>2.50–3.00	1.90
6	>3.00–3.50	2.10
7	>3.5–4.00	2.30

TYPICAL DIMENSIONS OF ABUTMENT - 6m BRIDGE

SL. NO.	H (m)	B (m)
1	1.00	1.90
2	>1.00–1.50	2.00
3	>1.50–2.00	2.20
4	>2.00–2.50	2.40
5	>2.50–3.00	2.60
6	>3.00–3.50	2.80
7	>3.50–4.00	3.00

ISLAMIC REPUBLIC OF AFGHANISTAN AND UNITED STATES AGENCY FOR INTERNATIONAL DEVELOPMENT

STRATEGIC PROVINCIAL ROADS SOUTHERN AND EASTERN AFGHANISTAN

INTERNATIONAL RELIEF & DEVELOPMENT, INC.

DAIKUNDI TO GIZAB ROAD PROJECT # 39 SECTION-1a

SHEET CONTENTS: SIDE ELEVATION OF SLAB BRIDGE AT Km 5+417

NAMES	SIGNATURE	DATE
DESIGNED : MY TAN NGUYEN		
DRAWN : MOHAMMAD SAYED HASHIMI		
CHECKED : M. MUSA SHARIFI		
APPROVED: ANDREY AVANOV		

SHEET NO.	REVISION	DATE
DG-BR-01 Sheet - 2/9	FIRST ISSUE	JUN 10
SCALE: AS SHOWN		

ISLAMIC REPUBLIC OF AFGHANISTAN
MINISTRY OF PUBLIC WORKS

International Relief and Development

UNITED STATES AGENCY FOR INTERNATIONAL DEVELOPMENT

NATIONAL GENRAL CONSTRUCTION COMPANY (NGCC)
ADDRESS:HAJI KHARABATI PLAZA, JADA -E-MAIWAND, KABUL, AFGHANISTAN
PHONE: 0798031326, E-MAIL:design@ngcaf.com

USAID SOUTH & EAST STRATEGIC PROVINCIAL ROADS

Kajran to Day Kundi- Gizab Road

PHASE - 3 (30% Drawings)

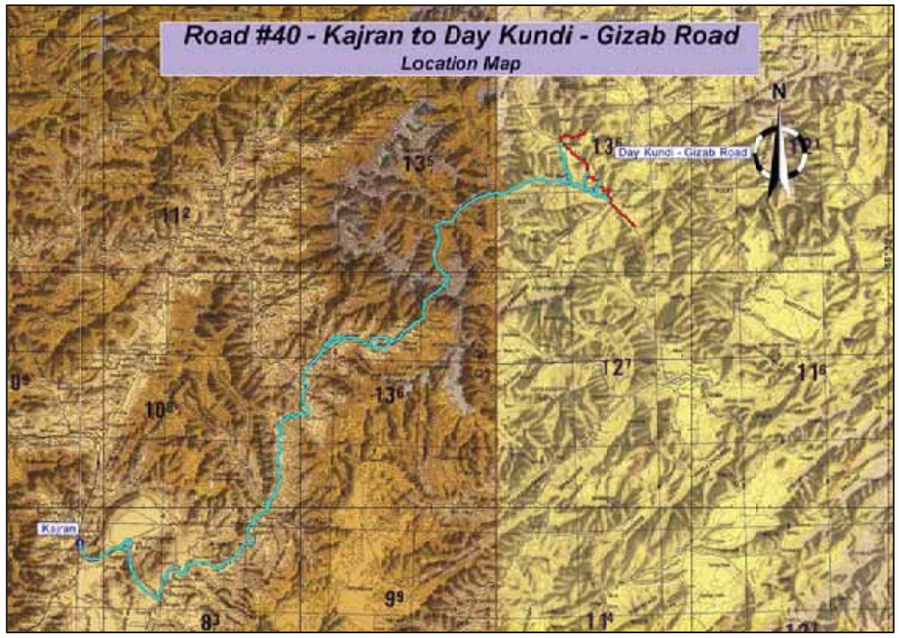

JUNE 2009

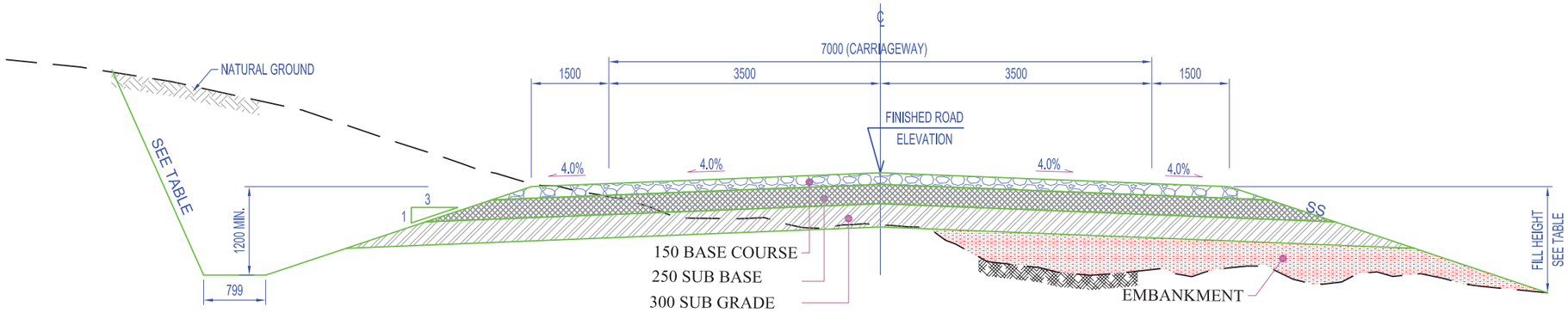

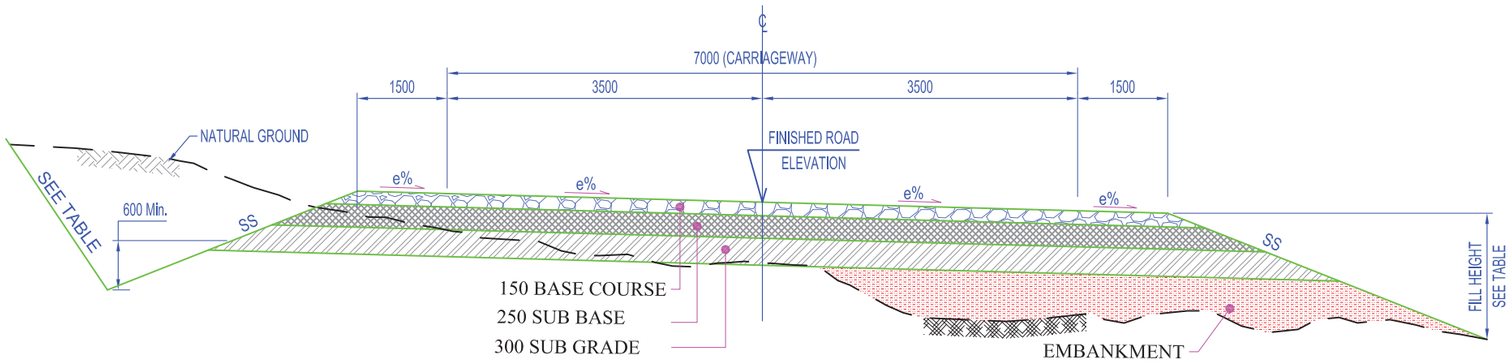

TABLE OF CUT AND FILL SLOPES	
HEIGHT	SLOPES
FOR FILL ≤ 3.0m	3.0 H : 1.0 V
FOR FILL ≥ 3.0m	1.5 H : 1.0 V
FOR CUT ≤ 2.0m	1.5 H : 1.0 V (SOIL MATERIALS)
FOR CUT ≤ 2.0m	1.0 H : 2.5 V (ROCK MATERIALS)
FOR CUT ≥ 2.0m	1.0 H : 2.5 V (SOIL AND ROCK)
SHOULDER	
FLAT AND ROLLING TERRAIN	1.5M WIDE
MOUNTAINOUS TERRAIN	1.0M WIDE

150 BASE COURSE
(CBR 5.5 % AASHTO T 193 AT 95% COMPACTION, AASHTO T-180) METHOD D.

250 SUB BASE
(CBR 6.5 % AASHTO T 193 AT 98% COMPACTION, AASHTO T-180) METHOD D.

300 SUB GRADE
(CBR 7.5% AASHTO T 193 AT 100% COMPACTION, AASHTO T-180) METHOD D.

ISLAMIC REPUBLIC OF AFGHANISTAN AND UNITED STATES AGENCY FOR INTERNATIONAL DEVELOPMENT	International Relief and Development	NATIONAL GENRAL CONSTRUCTION COMPANY (NGCC) ADDRESS:HAJI KHARABATI PLAZA, JADA -E- MAIWAND, KABUL, AFGHANISTAN PHONE: 0798031326, E-MAIL:design@ngcaf.com	USAID SOUTH & EAST STRATEGIC PROVINCIAL ROADS	SHEET CONTENTS	NAMES	SIGNATURE	DATE	SHEET NO.	REVISION	DATE
			DESIGN OF ROAD # 40 KAJRAN TO DAY KUNDI GIZAB ROAD PHASE - 1	TYPICAL ROAD CROSS SECTION	DESIGNED : ENG:HASSAN AKHLAQI		04-03-09	KD-RO-101	SUBMIT 30%	MAR 09
					DRAWN : ENG:TEIMORI		04-03-09			
					CHECKED : ENG: JAMAL		04-03-09	SCALE:		
					APPROVED:			AS SHOWN		

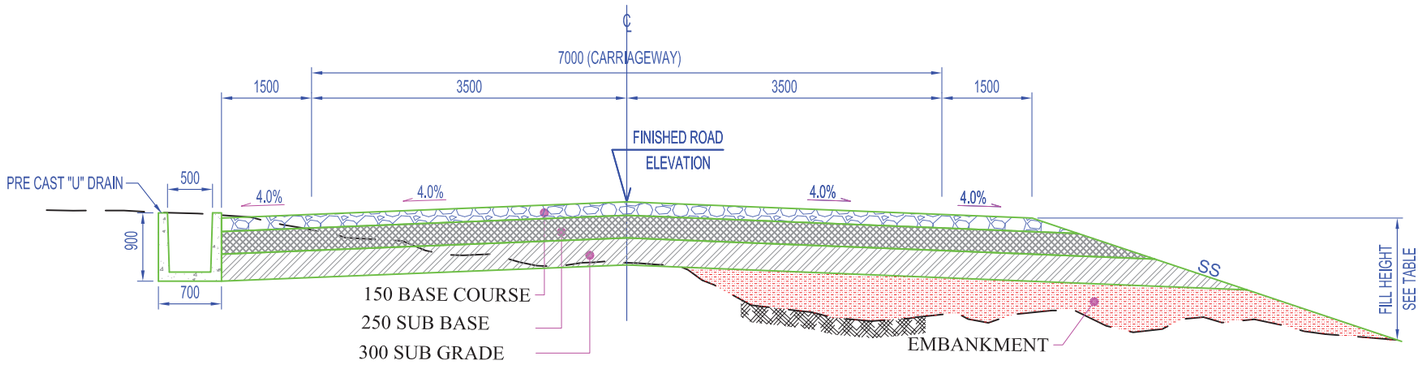

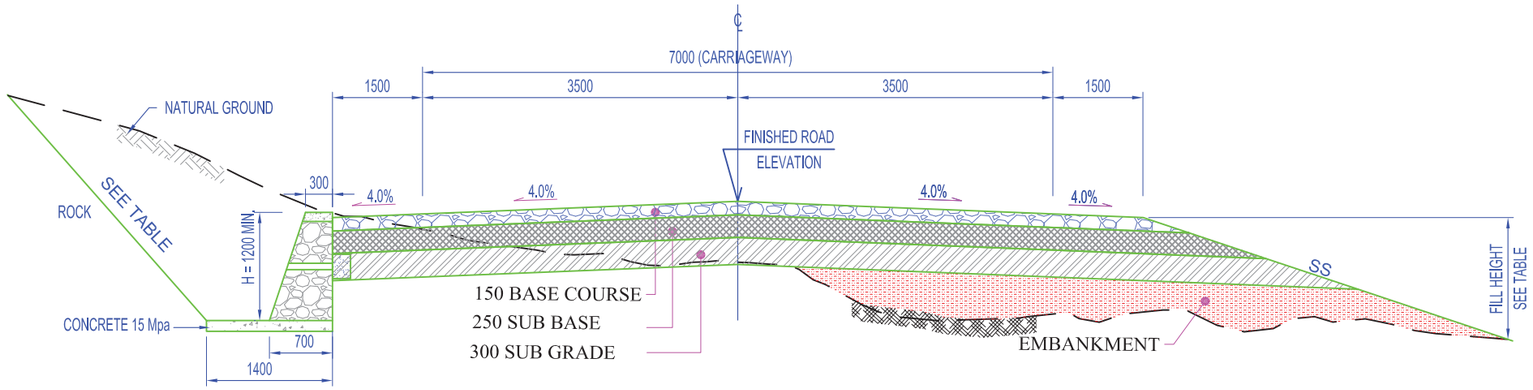

NOTE:

1. ROAD LAYERES IN SECTION 0+000 TO 9+500 ARE DESIGNED BASED ON RESULT OPTAINED FROM LABORATORY TESTS BUT IN THIS SECTION SOIL DENSITY AND BEARING CAPACITY IS POOR THEREFORE WE HAVE TO REPLACE THE SOIL OF THIS AREA IN DEPTH OF 1 METER WITH AN APPROPERIATE SOIL WITH AN ACCEPTABLE DENCITY AND BEARING CAPACITY.
2. UNSUITABLE MATERIALS SHALL BE REMOVED AS DIRECTED BY THE ENGINEER AND SHALL BE REPLACED WITH SUITABLE BACKFILL MATERIALS.
3. THE CONTRACTOR MAY SECURE APPROVAL FROM THE ENGINEER TO FLATTEN CUT SLOPES TO OBTAIN ADDITIONAL EMBANKMENT MATERIAL.
4. CONSTRUCT STONE MASONRY LINED DITCH (DETAIL SEE DWG WHERE THE LONGITUDINAL PROFILE OF ROAD IS 4.0% OR GREATER, OR AS DIRECTED BY THE ENGINEER. ON ROCK CUTS, DITCH SHOULD BE SHAPED AS TYPICAL SECTION
5. EXPOSED SUBGRADE SHALL BE COMPACTED TO AT LEAST 98% OF THE MAXIMUM MODIFIED PROCTOR DENSITY IN ACCORDANCE WITH AASHTO T180-95.
6. ON SECTIONS WITH ROCK SUBGRADE LEVEL (CUT), EXCAVATE 150mm BELOW SUBGRADE AND REPLACE WITH TOPPING MATERIAL OR WITH OTHER SUITABLE MATERIAL (CBR $\geq$ 7).
7. REFER TO DWG. FOR LINED DITCH AND ROCK DITCH SCHEDULE.
8. ALL DIMENSIONS ARE IN MILLIMETERS UNLESS OTHERWISE SHOWN.

ISLAMIC REPUBLIC OF AFGHANISTAN AND UNITED STATES AGENCY FOR INTERNATIONAL DEVELOPMENT	International Relief and Development	NATIONAL GENRAL CONSTRUCTION COMPANY (NGCC) ADDRESS:HAJI KHARABATI PLAZA, JADA -E- MAIWAND, KABUL, AFGHANISTAN PHONE: 0798031326, E-MAIL:design@ngcaf.com	USAID SOUTH & EAST STRATEGIC PROVINCIAL ROADS	SHEET CONTENTS	NAMES	SIGNATURE	DATE	SHEET NO.	REVISION	DATE
			DESIGN OF ROAD # 40 KAJRAN TO DAY KUNDI GIZAB ROAD PHASE - 1	TYPICAL ROAD CROSS SECTION	DESIGNED : ENG:HASSAN AKHLAQI		04-03-09	KD-RO-102	SUBMIT 30%	MAR 09
					DRAWN : ENG:TEIMORI		04-03-09			
					CHECKED : ENG: JAMAL		04-03-09	SCALE:		
					APPROVED:			AS SHOWN		

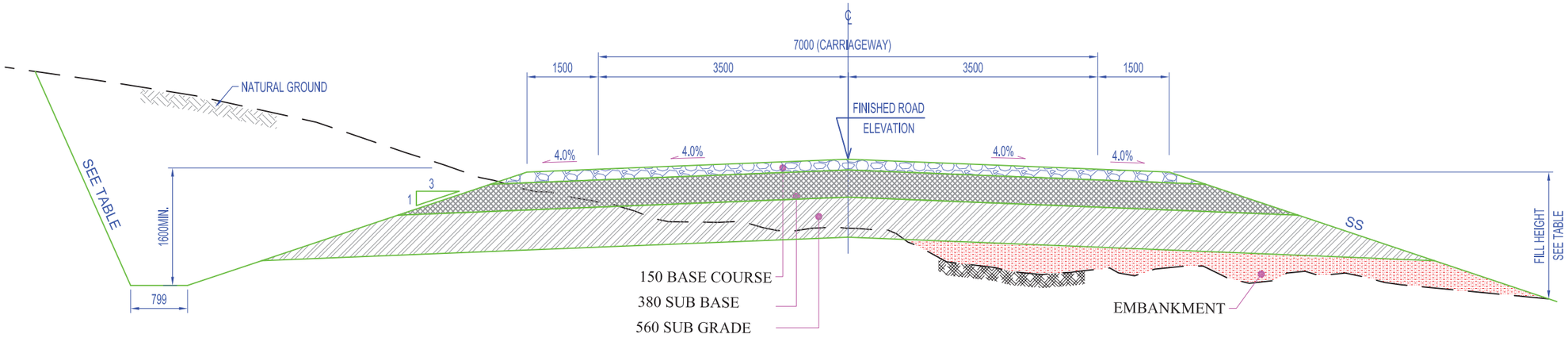

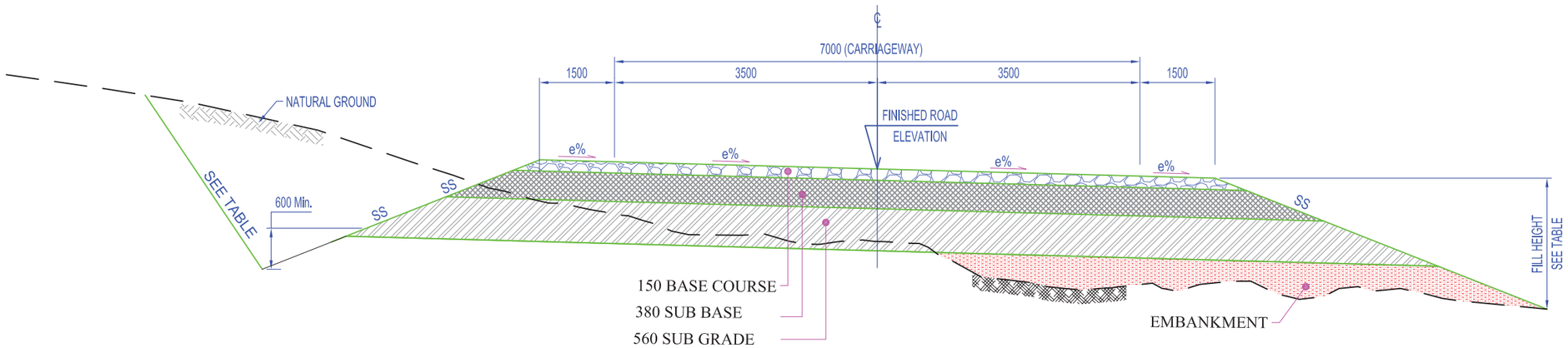

TABLE OF CUT AND FILL SLOPES	
HEIGHT	SLOPES
FOR FILL ≤ 3.0m	3.0 H : 1.0 V
FOR FILL ≥ 3.0m	1.5 H : 1.0 V
FOR CUT ≤ 2.0m	1.5 H : 1.0 V (SOIL MATERIALS)
FOR CUT ≤ 2.0m	1.0 H : 2.5 V (ROCK MATERIALS)
FOR CUT ≥ 2.0m	1.0 H : 2.5 V (SOIL AND ROCK)
SHOULDER	
FLAT AND ROLLING TERRAIN	1.5M WIDE
MOUNTAINOUS TERRAIN	1.0M WIDE

150 BASE COURSE
(CBR 16 % AASHTO T 193 AT 100% COMPACTION, AASHTO T-180) METHOD D.

380 SUB BASE
(CBR 18 % AASHTO T 193 AT 98% COMPACTION, AASHTO T-180) METHOD D.

560 SUB GRADE
(CBR 14 %, AASHTO T 193 AT 100% COMPACTION, AASHTO T-180) METHOD D.

ISLAMIC REPUBLIC OF AFGHANISTAN AND UNITED STATES AGENCY FOR INTERNATIONAL DEVELOPMENT	International Relief and Development	NATIONAL GENRAL CONSTRUCTION COMPANY (NGCC) ADDRESS: HAJI KHARABATI PLAZA, JADA -E- MAIWAND, KABUL, AFGHANISTAN PHONE: 0798031326, E-MAIL: design@ngcaf.com	USAID SOUTH & EAST STRATEGIC PROVINCIAL ROADS	SHEET CONTENTS	NAMES	SIGNATURE	DATE	SHEET NO.	REVISION	DATE
			DESIGN OF ROAD # 40 KAJRAN TO DAY KUNDI GIZAB ROAD PHASE - 1	TYPICAL ROAD CROSS SECTION	DESIGNED : ENG:HASSAN AKHLAQI		04-03-09	KD-RO-103	SUBMIT 30%	MAR 09
					DRAWN : ENG:TEIMORI		04-03-09			
					CHECKED : ENG: JAMAL		04-03-09	SCALE:		
					APPROVED:			AS SHOWN		

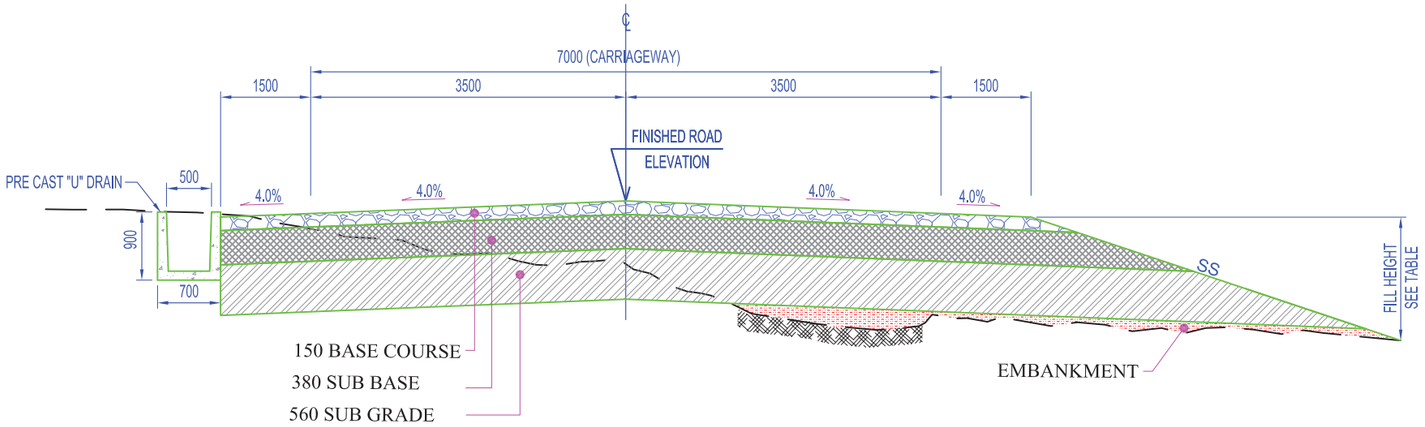

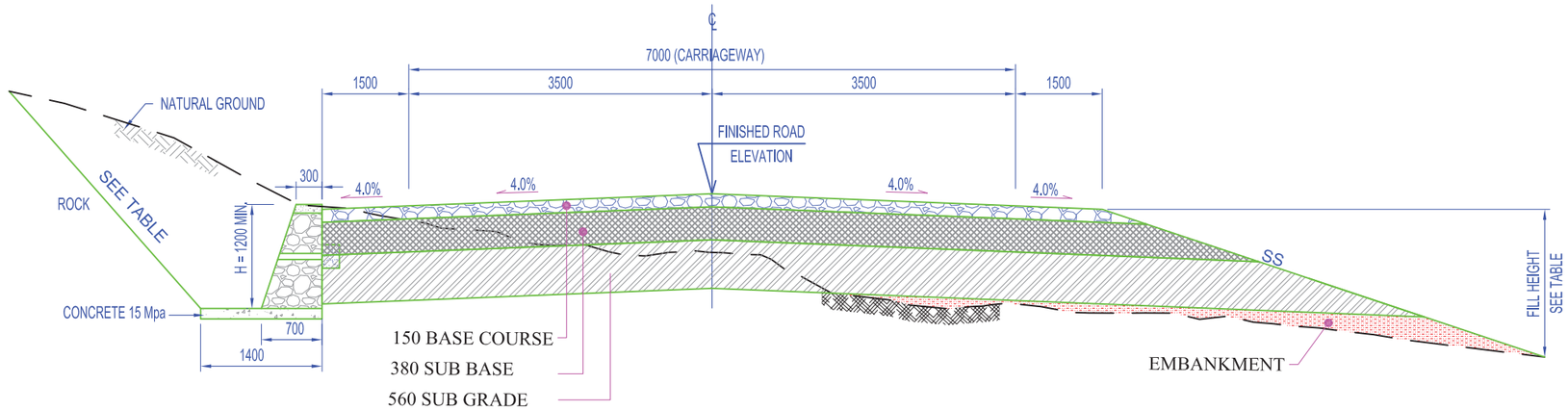

NOTE:

1. ROAD LAYERES IN SECTION 9+500 TO 20+913 ARE DESIGNED BASED ON RESULT OPTAINED FROM LABORATORY TESTS BUT IN THIS SECTION SOIL DENSITY AND BEARING CAPACITY IS POOR THEREFORE WE HAVE TO REPLACE THE SOIL OF THIS AREA IN DEPTH OF 1 METER WITH AN APPROPERIATE SOIL WITH AN ACCEPTABLE DENCITY AND BEARING CAPACITY.
2. UNSUITABLE MATERIALS SHALL BE REMOVED AS DIRECTED BY THE ENGINEER AND SHALL BE REPLACED WITH SUITABLE BACKFILL MATERIALS.
3. THE CONTRACTOR MAY SECURE APPROVAL FROM THE ENGINEER TO FLATTEN CUT SLOPES TO OBTAIN ADDITIONAL EMBANKMENT MATERIAL.
4. CONSTRUCT STONE MASONRY LINED DITCH (DETAIL SEE DWG WHERE THE LONGITUDINAL PROFILE OF ROAD IS 4.0% OR GREATER, OR AS DIRECTED BY THE ENGINEER. ON ROCK CUTS, DITCH SHOULD BE SHAPED AS TYPICAL SECTION
5. EXPOSED SUBGRADE SHALL BE COMPACTED TO AT LEAST 98% OF THE MAXIMUM MODIFIED PROCTOR DENSITY IN ACCORDANCE WITH AASHTO T180-95.
6. ON SECTIONS WITH ROCK SUBGRADE LEVEL (CUT), EXCAVATE 150mm BELOW SUBGRADE AND REPLACE WITH TOPPING MATERIAL OR WITH OTHER SUITABLE MATERIAL (CBR $\geq$ 7).
7. REFER TO DWG. FOR LINED DITCH AND ROCK DITCH SCHEDULE.
8. ALL DIMENSIONS ARE IN MILLIMETERS UNLESS OTHERWISE SHOWN.

ISLAMIC REPUBLIC OF AFGHANISTAN AND UNITED STATES AGENCY FOR INTERNATIONAL DEVELOPMENT	IRD International Relief and Development	NATIONAL GENRAL CONSTRUCTION COMPANY (NGCC) ADDRESS:HAJI KHARABATI PLAZA, JADA -E- MAIWAND, KABUL, AFGHANISTAN PHONE: 0798031326, E-MAIL:design@ngcaf.com	USAID SOUTH & EAST STRATEGIC PROVINCIAL ROADS	SHEET CONTENTS	NAMES	SIGNATURE	DATE	SHEET NO.	REVISION	DATE
			DESIGN OF ROAD # 40 KAJRAN TO DAY KUNDI GIZAB ROAD PHASE - 1	TYPICAL ROAD CROSS SECTION	DESIGNED : ENG:HASSAN AKHLAQI		04-03-09	KD-RO-104	SUBMIT 30%	MAR 09
					DRAWN : ENG:TEIMORI		04-03-09			
					CHECKED : ENG: JAMAL		04-03-09	SCALE:		
					APPROVED:			AS SHOWN		

USAID/Afghanistan
U.S. Embassy Cafe Compound
Great Masood Road
Kabul, Afghanistan
Tel: 202.216.6288
http://afghanistan.usaid.gov