ISLAMIC REPUBLIC OF AFGHANISTAN
AFGHANISTAN ENGINEERING SUPPORT PROGRAM (AESP)

SARDAR GIRLS HIGH SCHOOL

SITE LAYOUT, GRADING, AND UTILITY DRAWINGS - ADDENDUM 1

KABUL, AFGHANISTAN
DATE: DECEMBER 9, 2010

NOTE: A3 SIZE REDUCED TO HALF SCALE.

BID DOCUMENT SUBMITTAL

This project was made possible by the United States Agency for International Development and the generous support of the American People through USAID Global Architecture and Engineering IQC Contracts.

SYMB	SUBMITTAL/REVISION DESCRIPTION	DATE	APR
A	95% DESIGN SUBMITTAL	08/19/10	BRG
B	BID DOCUMENT SUBMITTAL	09/26/10	BRG
C	ADDED WASTEWATER HOLDING TANK	12/09/10	BRG

DESIGNED BY: KWC
DATE: 12-09-10
DRAWN BY: ARC
SUBMITTED BY: TETRA TECH
CHECKED BY: KWC
CAD FILE NAME: WOLT06-G-00

USAID FROM THE AMERICAN PEOPLE

A E S P

USAID – OIEE
SARDAR GIRLS HIGH SCHOOL
KABUL, AFGHANISTAN

COVER SHEET

SHEET REFERENCE NUMBER:
LT0006
G-00

P:\1298\Work Orders\WO-LT\WO-LT-0006 SGHS Utility Design\CAD\Conceptual\Civil\WOLT06-G-00.dwg 12/12/2010 9:30:56 AM Fazelpoor, Behroz

INDEX OF DRAWINGS
SARDAR GIRLS HIGH SCHOOL

SHEET REFERENCE NUMBER	ISSUE STATUS	DATE OF ISSUE	DRAWING TITLE
GENERAL DRAWINGS			
LT006-G-00	REV C	12/09/10	COVER SHEET
LT006-G-01	REV C	12/09/10	INDEX OF DRAWINGS SHEET 1 OF 2
LT006-G-02	REV C	12/09/10	INDEX OF DRAWINGS SHEET 2 OF 2 △C
CIVIL DRAWINGS			
LT006-C-01	REV B	09/26/10	CIVIL LEGEND, SYMBOLS, GENERAL NOTES, & ABBREVIATIONS
LT006-C-02	REV B	09/26/10	SITE KEY PLAN
LT006-C-03	REV B	09/26/10	SITE DEMOLITION PLAN
LT006-C-10	REV B	09/26/10	SITE LAYOUT PLAN SHEET 1 OF 4
LT006-C-11	REV B	09/26/10	SITE LAYOUT PLAN SHEET 2 OF 4
LT006-C-12	REV B	09/26/10	SITE LAYOUT PLAN SHEET 3 OF 4
LT006-C-13	REV C	12/09/10	SITE LAYOUT PLAN SHEET 4 OF 4 △C
LT006-C-20	REV B	09/26/10	GRADING & DRAINAGE PLAN SHEET 1 OF 4
LT006-C-21	REV B	09/26/10	GRADING & DRAINAGE PLAN SHEET 2 OF 4
LT006-C-22	REV B	09/26/10	GRADING & DRAINAGE PLAN SHEET 3 OF 4
LT006-C-23	REV C	12/09/10	GRADING & DRAINAGE PLAN SHEET 4 OF 4 △C
LT006-C-30	REV B	09/26/10	SITE & GRADING DETAILS SHEET 1 OF 4
LT006-C-31	REV B	09/26/10	SITE & GRADING DETAILS SHEET 2 OF 4
LT006-C-32	REV B	09/26/10	SITE & GRADING DETAILS SHEET 3 OF 4
LT006-C-33	REV B	09/26/10	SITE & GRADING DETAILS SHEET 4 OF 4

SHEET REFERENCE NUMBER	ISSUE STATUS	DATE OF ISSUE	DRAWING TITLE
UTILITY DRAWINGS			
LT006-U-01	REV C	12/09/10	COMBINED SITE INFRASTRUCTURE PLAN FOR UTILITIES △C
LT006-U-10	REV B	09/26/10	WATER & SEWER UTILITY PLAN SHEET 1 OF 5
LT006-U-11	REV B	09/26/10	WATER & SEWER UTILITY PLAN SHEET 2 OF 5
LT006-U-12	REV B	09/26/10	WATER & SEWER UTILITY PLAN SHEET 3 OF 5
LT006-U-13	REV C	12/09/10	WATER & SEWER UTILITY PLAN SHEET 4 OF 5 △C
LT006-U-14	REV B	09/26/10	WATER & SEWER UTILITY PLAN SHEET 5 OF 5
LT006-U-20	REV B	09/26/10	WATER & SEWER DETAILS SHEET 1 OF 4
LT006-U-21	REV B	09/26/10	WATER & SEWER DETAILS SHEET 2 OF 4
LT006-U-22	REV B	09/26/10	WATER & SEWER DETAILS SHEET 3 OF 4
LT006-U-23	REV B	09/26/10	WATER & SEWER DETAILS SHEET 4 OF 4
LT006-U-30	REV B	09/26/10	WELL DETAILS SHEET 1 OF 2
LT006-U-31	REV B	09/26/10	WELL DETAILS SHEET 2 OF 2
LT006-U-40	REV B	09/26/10	WELL BUILDING & DISINFECTION SYSTEM
LT006-U-50	REV B	09/26/10	GREYWATER TANK-01 PLAN
LT006-U-51	REV B	09/26/10	GREYWATER TANK-01 SECTIONS
LT006-U-52	REV B	09/26/10	GREYWATER TANK-02 PLAN
LT006-U-53	REV B	09/26/10	GREYWATER TANK-02 SECTIONS
LT006-U-54	REV C	12/09/10	GREYWATER TANK GENERAL NOTES AND TYPICAL DETAILS
LT006-U-55	REV C	12/09/10	WASTEWATER HOLDING TANK PLAN △C
LT006-U-56	REV C	12/09/10	WASTEWATER HOLDING TANK SECTIONS
LT006-U-60	REV B	09/26/10	INFLUENT PUMP STATION
LT006-U-61	REV B	09/26/10	INFLUENT PUMP STATION CONTROL PANEL DIAGRAM

SHEET REFERENCE NUMBER	ISSUE STATUS	DATE OF ISSUE	DRAWING TITLE
LT006-U-62	REV B	09/26/10	INFLUENT PUMP STATION DETAILS
LT006-U-70	REV C	12/09/10	WASTEWATER TREATMENT PLANT LAYOUT △C
LT006-U-71	REV B	09/26/10	WASTEWATER TREATMENT PROCESS AND INSTRUMENTATION DIAGRAM
LT006-U-72	REV B	09/26/10	WASTEWATER TREATMENT PLANT SLAB DETAILS
LT006-U-80	REV B	09/26/10	EFFLUENT PUMP STATION
LT006-U-81	REV B	09/26/10	EFFLUENT PUMP STATION PANEL DIAGRAM
LT006-U-82	REV B	09/26/10	EFFLUENT PUMP STATION DETAILS
LT006-U-90	REV B	09/26/10	WATER TANK PLAN AND ELEVATION
LT006-U-91	REV B	09/26/10	WATER TANK DETAILS SHEET 1 OF 2
LT006-U-92	REV B	09/26/10	WATER TANK DETAILS SHEET 2 OF 2
LT006-U-93	REV B	09/26/10	PIPE SUPPORT DETAILS
ARCHITECTURAL DRAWINGS			
LT006-A-01	REV B	09/26/10	WELL BUILDING SYMBOLS AND ABBREVIATIONS
LT006-A-02	REV B	09/26/10	WELL BUILDING FLOOR PLAN
LT006-A-03	REV B	09/26/10	WELL BUILDING ROOF PLAN
LT006-A-04.1	REV B	09/26/10	WELL BUILDING BUILDING ELEVATIONS SHEET 1 OF 2
LT006-A-04.2	REV B	09/26/10	WELL BUILDING BUILDING ELEVATIONS SHEET 2 OF 2
LT006-A-05	REV B	09/26/10	WELL BUILDING BUILDING SECTIONS
LT006-A-06	REV B	09/26/10	WELL BUILDING REFLECTED CEILING PLAN
LT006-A-07	REV B	09/26/10	WELL BUILDING WALL SECTIONS AND DETAILS
LT006-A-08	REV B	09/26/10	WELL BUILDING MISCELLANEOUS DETAILS
LT006-A-09	REV B	09/26/10	WELL BUILDING STAIR DETAILS AND SCHEDULES
LT006-A-10	REV B	09/26/10	WELL BUILDING WELL PUMP SECURITY ENCLOSURE SECTIONS AND DETAILS

UNLESS OTHERWISE NOTED, LINEAR DIMENSIONS SHOWN ARE IN METERS.

NOTE: A3 SIZE REDUCED TO HALF SCALE.

BID DOCUMENT SUBMITTAL

△C	ADDED WASTEWATER HOLDING TANK	12/09/10	BRG
B	BID DOCUMENT SUBMITTAL	09/26/10	BRG
A	95% DESIGN SUBMITTAL	08/19/10	BRG
SYMB	SUBMITTAL/REVISION DESCRIPTION	DATE	APR

This project was made possible by the United States Agency for International Development and the generous support of the American People through USAID Global Architecture and Engineering IQC Contracts.

DESIGNED BY: KWC
DATE: 12-09-10
DRAWN BY: ARC
SUBMITTED BY: TETRA TECH
CHECKED BY: KWC
CAD FILE NAME: WOLT06-G-01

USAID FROM THE AMERICAN PEOPLE

A E S P

USAID – OIEE
SARDAR GIRLS HIGH SCHOOL
KABUL, AFGHANISTAN

INDEX OF DRAWINGS
SHEET 1 OF 2

SHEET REFERENCE NUMBER:
LT0006 G-01

P:\1298\Work Orders\WO-LT\WO-LT-0006 SGHS Utility Design\CAD\Conceptual\Civil\WOLT06-G-01.dwg 12/12/2010 9:32:30 AM Fazelpoor, Behroz

INDEX OF DRAWINGS
SARDAR GIRLS HIGH SCHOOL

SHEET REFERENCE NUMBER	ISSUE STATUS	DATE OF ISSUE	DRAWING TITLE
STRUCTURAL DRAWINGS			
LT006-S-01	REV B	09/26/10	STRUCTURAL GENERAL NOTES SHEET 1 OF 2
LT006-S-02	REV B	09/26/10	STRUCTURAL GENERAL NOTES SHEET 2 OF 2
LT006-S-03	REV B	09/26/10	WELL BUILDING FOUNDATION PLAN
LT006-S-04	REV B	09/26/10	WELL BUILDING ROOF FRAMING PLAN
LT006-S-05	REV B	09/26/10	WELL BUILDING SECTION
LT006-S-06	REV B	09/26/10	WELL BUILDING TYPICAL CMU WALL DETAILS
LT006-S-07	REV B	09/26/10	WELL BUILDING ROOF AND FOUNDATION DETAILS
LT006-S-08	REV B	09/26/10	WELL BUILDING WELL PUMP SECURITY ENCLOSURE DETAIL
LT006-S-10	REV B	09/26/10	WATER TOWER FOUNDATION PLAN
LT006-S-11	REV B	09/26/10	WATER TOWER PLATFORM AND CATWALK FRAMING PLAN
LT006-S-12	REV B	09/26/10	WATER TOWER ELEVATIONS
LT006-S-13	REV B	09/26/10	WATER TOWER FOUNDATION DETAILS SHEET 1 OF 2
LT006-S-14	REV B	09/26/10	WATER TOWER FOUNDATION DETAILS SHEET 2 OF 2
LT006-S-15	REV B	09/26/10	WATER TOWER SECTION & DETAILS SHEET 1 OF 3
LT006-S-16	REV B	09/26/10	WATER TOWER SECTION & DETAILS SHEET 2 OF 3
LT006-S-17	REV B	09/26/10	WATER TOWER SECTION & DETAILS SHEET 3 OF 3
MECHANICAL DRAWINGS			
LT006-M-01	REV B	09/26/10	MECHANICAL FLOOR PLAN

SHEET REFERENCE NUMBER	ISSUE STATUS	DATE OF ISSUE	DRAWING TITLE
ELECTRICAL DRAWINGS			
LT006-E-01	REV B	09/26/10	ELECTRICAL LEGEND, SYMBOLS, GENERAL NOTES, AND ABBREVIATIONS
LT006-E-02	REV C	12/09/10	ELECTRICAL SITE PLAN (A)
LT006-E-03	REV B	09/26/10	ELECTRICAL SITE DETAIL
LT006-E-10	REV B	09/26/10	ELECTRICAL ONE-LINE DIAGRAM AND EQUIPMENT DETAILS
LT006-E-20	REV B	09/26/10	ELECTRICAL DETAILS AND UNDERGROUND STRUCTURES
LT006-E-21	REV B	09/26/10	ELECTRICAL DETAILS
LT006-E-30	REV B	09/26/10	ELECTRICAL PUMP HOUSE PLANS AND DETAILS

SHEET REFERENCE NUMBER	ISSUE STATUS	DATE OF ISSUE	DRAWING TITLE

BID DOCUMENT SUBMITTAL

SYMB	SUBMITTAL/REVISION DESCRIPTION	DATE	APR
A	ADDED WASTEWATER HOLDING TANK DETAILS	12/09/10	BRG
B	BID DOCUMENT SUBMITTAL	09/26/10	BRG
A	95% DESIGN SUBMITTAL	08/19/10	BRG

This project was made possible by the United States Agency for International Development and the generous support of the American People through USAID Global Architecture and Engineering IQC Contracts.

DESIGNED BY: KWC
DATE: 12-09-10
DRAWN BY: ARC
SUBMITTED BY: TETRA TECH
CHECKED BY: KWC
CAD FILE NAME: WOLT06-G-02

USAID FROM THE AMERICAN PEOPLE

A E S P

USAID – OIEE
SARDAR GIRLS HIGH SCHOOL
KABUL, AFGHANISTAN

INDEX OF DRAWINGS
SHEET 2 OF 2

SHEET REFERENCE NUMBER:
LT0006 G-02

NOTE: A3 SIZE REDUCED TO HALF SCALE.

P:\1298\Work Orders\WO-LT\WO-LT-0006 SGHS Utility Design\CAD\Conceptual\Civil\WOLT06-G-02.dwg 12/12/2010 9:32:03 AM Fazelpoor, Behroz

GENERAL NOTES:

1. ALL DIMENSIONS ARE IN MILLIMETERS UNLESS NOTED OTHERWISE.
2. ALL PIPE SIZES ARE IN MILLIMETERS UNLESS NOTED OTHERWISE.
3. STATIONS, ELEVATIONS, AND COORDINATES ARE IN METERS.
4. ALL DIMENSIONS ARE TO FACE OF CURB/INSIDE OF PERIMETER WALL.

ABBREVIATIONS

CONC	CONCRETE
CONN	CONNECTION
CORR	CORRUGATED
CPVC	CHLORINATED POLYVINYL CHLORIDE
DI	DUCTILE IRON
DN	DOWN
ELEV	ELEVATION
FFE	FINISHED FLOOR ELEVATION
FM	FORCE MAIN
FRP	FIBERGLASS REINFORCED POLYESTER
GV	GATE VALVE
GW	GREYWATER
HYD	HYDRANT
HDPE	HIGH DENSITY POLYETHLENE
INV	INVERT
I.E.	INVERT ELEVATION
LCMH	LEVEL CONTROL MANHOLE
MJ	MECHANICAL JOINT
NIC	NOT IN CONTRACT
PEN	PENETRATION
PS	PUMP STATION
PVC	POLYVINYL CHLORIDE
RED	REDUCER
R&D	REMOVE & DISPOSE
S	SEWER
SMH	SEWER MANHOLE
SST	STAINLESS STEEL
TOC	TOP OF CONCRETE
TYP	TYPICAL
UNO	UNLESS NOTED OTHERWISE
VCC	VERTICAL CONCRETE CURB
W/	WITH
W	WATER
WSO	WATER SHUT OFF
WWTP	WASTEWATER TREATMENT PLANT

PROPOSED	EXISTING	DESCRIPTION
		CHECK VALVE
		PRODUCTION WELL
		REDUCER
WSO		WATER SHUT OFF
		GATE VALVE
PS		PUMP STATION
		CAP
		CLEAN OUT
		GRINDER PUMP
		SEWER MANHOLE
		SURVEY BENCHMARK
		PROPOSED CONCRETE
		BENCHMARK
		SURVEY MONUMENT

PROPOSED	DESCRIPTION
℄	ROAD
W 150 W	DOMESTIC WATER LINE (W/SIZE)
S 150 S	GRAVITY SEWER (W/SIZE)
UGE UGE	UNDERGROUND ELECTRIC
GW 150 GW	GREY WATER LINE (W/SIZE)
X X	FENCE

PIPE SIZES SHOWN ON DRAWINGS METRIC (mm)	NOMINAL PIPE SIZES ENGLISH (INCH)
8	1/4"
15	1/2"
20	3/4"
25	1"
32	1 1/4"
40	1 1/2"
50	2"
65	2 1/2"
80	3"
90	3 1/2"
100	4"
150	6"
200	8"
250	10"
300	12"
350	14"
375	15"
400	16"
450	18"
600	24"

NOTE: A3 SIZE REDUCED TO HALF SCALE.

BID DOCUMENT SUBMITTAL

SYMB	SUBMITTAL/REVISION DESCRIPTION	DATE	APR
B	BID DOCUMENT SUBMITTAL	09/26/10	BRG
A	95% DESIGN SUBMITTAL	08/19/10	BRG

This project was made possible by the United States Agency for International Development and the generous support of the American People through USAID Global Architecture and Engineering IQC Contracts.

DESIGNED BY: JLH
DATE: 09-26-10
DRAWN BY: EWK
SUBMITTED BY: TETRA TECH
CHECKED BY: KWC
CAD FILE NAME: WOLT06-C-01

USAID FROM THE AMERICAN PEOPLE

A E S P

USAID - OIEE
SARDAR GIRLS HIGH SCHOOL
KABUL, AFGHANISTAN

CIVIL LEGEND, SYMBOLS, GENERAL NOTES, & ABBREVIATIONS

SHEET REFERENCE NUMBER:
LT0006
C-01

Z:\127-1298-10001\Work Orders\WO-LT\WO-LT-0006 SGHS Utility Design\CAD\Conceptual\Civil\WOLT06-C-01.dwg 9/23/2010 2:37:08 PM Koethe, Eric

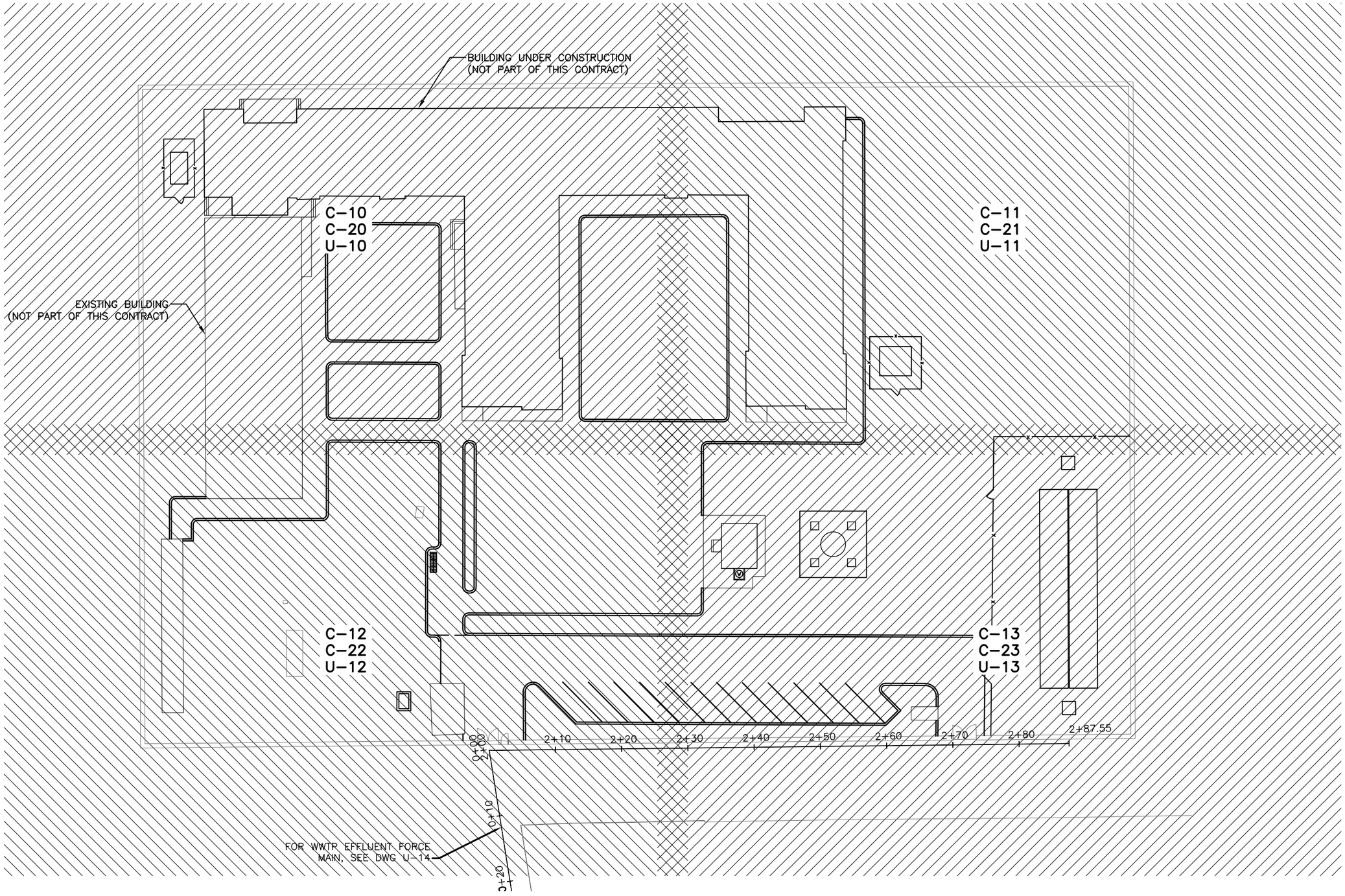

SITE KEY PLAN

SCALE 1:300

UNLESS OTHERWISE NOTED, LINEAR DIMENSIONS SHOWN ARE IN MILLIMETERS.

10 5 0 5 10 20

1:300

NOTE: A3 SIZE REDUCED TO HALF SCALE.

BID DOCUMENT SUBMITTAL

This project was made possible by the United States Agency for International Development and the generous support of the American People through USAID Global Architecture and Engineering IQC Contracts.

SYMB	SUBMITTAL/REVISION DESCRIPTION	DATE	APR
B	BID DOCUMENT SUBMITTAL	09/26/10	BRG
A	95% DESIGN SUBMITTAL	08/19/10	BRG

DESIGNED BY: JLH
DATE: 09-26-10
DRAWN BY: ARC
SUBMITTED BY: TETRA TECH
CHECKED BY: KWC
CAD FILE NAME: WOLT06-C-02

USAID FROM THE AMERICAN PEOPLE

A E S P

USAID – OIEE
SARDAR GIRLS HIGH SCHOOL
KABUL, AFGHANISTAN

SITE KEY PLAN

SHEET REFERENCE NUMBER:
LT0006
C-02

Z:\127-1298-10001\Work Orders\WO-LT\WO-LT-0006 SGHS Utility Design\CAD\Conceptual\Civil\WOLT06-C-02.dwg 9/23/2010 2:27:50 PM Koethe, Eric

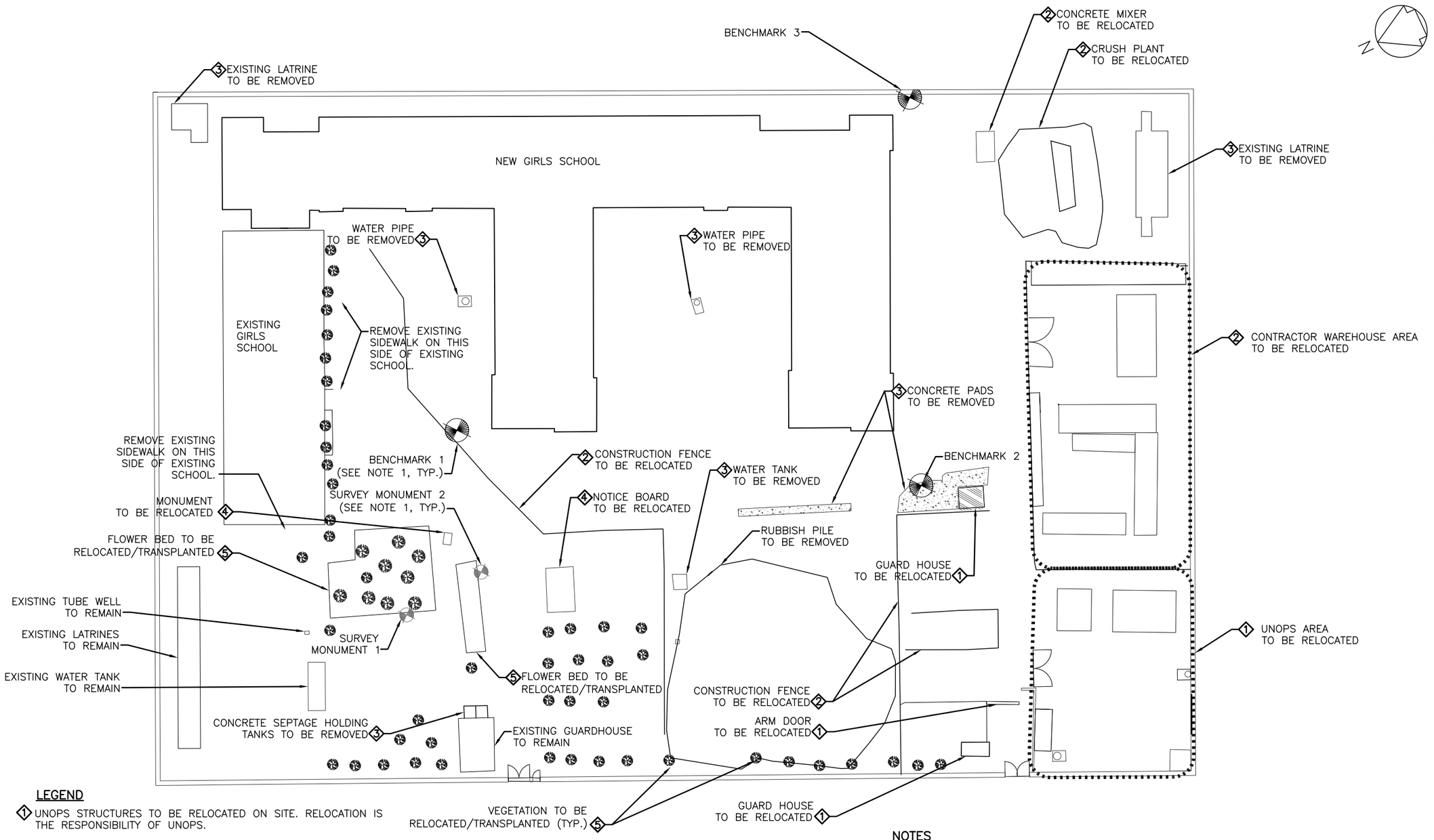

LEGEND

1. UNOPS STRUCTURES TO BE RELOCATED ON SITE. RELOCATION IS THE RESPONSIBILITY OF UNOPS.
2. CONTRACTOR STRUCTURES THAT MAY OR MAY NOT REMAIN DEPENDING ON CONTRACTOR SELECTION. CONTRACTOR STRUCTURES MAY NEED TO BE RELOCATED BASED ON THE UTILITY DESIGN. RELOCATION IS THE RESPONSIBILITY OF THE CONTRACTOR.
3. EXISTING SCHOOL STRUCTURES TO BE REMOVED. SCHEDULE FOR REMOVAL TO BE COORDINATED DURING CONSTRUCTION.
4. EXISTING SCHOOL STRUCTURES TO BE RELOCATED. SCHEDULE FOR RELOCATION TO BE COORDINATED DURING CONSTRUCTION.
5. EXISTING VEGETATION TO BE RELOCATED/TRANSPLANTED. SCHEDULE FOR RELOCATION TO BE COORDINATED DURING CONSTRUCTION.

NOTES

1) ALL EXISTING SURVEY MONUMENTS AND BENCHMARKS ARE TO BE RESET DURING CONSTRUCTION IF REQUIRED.
2) ALL AREAS TO BE PAVED SHALL BE GRUBBED TO REMOVE STUMPS AND ROOTS TO A DEPTH OF NO LESS THAN 455mm BELOW THE ORIGINAL SURFACE LEVEL OF THE GROUND.
3) EROSION CONTROL MEASURES SHALL BE IMPLEMENTED TO PREVENT NEGATIVE IMPACTS TO THE WORK BEING PERFORMED UNDER THIS CONTRACT, THE EXISTING SCHOOL FACILITIES, OR THE RECENTLY CONSTRUCTED SCHOOL FACILITIES.

SITE DEMOLITION PLAN

SCALE 1:300

UNLESS OTHERWISE NOTED, LINEAR DIMENSIONS SHOWN ARE IN MILLIMETERS.

10 5 0 5 10 20
1:300

NOTE: A3 SIZE REDUCED TO HALF SCALE.

BID DOCUMENT SUBMITTAL

SYMB	SUBMITTAL/REVISION DESCRIPTION	DATE	APR
A	95% DESIGN SUBMITTAL	08/19/10	BRG
B	BID DOCUMENT SUBMITTAL	09/26/10	BRG

This project was made possible by the United States Agency for International Development and the generous support of the American People through USAID Global Architecture and Engineering IQC Contracts.

DESIGNED BY: JLH
DATE: 09-26-10
DRAWN BY: ARC
SUBMITTED BY: TETRA TECH
CHECKED BY: KWC
CAD FILE NAME: WOLT06-C-03

USAID FROM THE AMERICAN PEOPLE

A E S P

USAID – OIEE
SARDAR GIRLS HIGH SCHOOL
KABUL, AFGHANISTAN

SITE DEMOLITION PLAN

SHEET REFERENCE NUMBER:
LT0006
C-03

Z:\127-1298-10001\Work Orders\WO-LT\WO-LT-0006 SGHS Utility Design\CAD\Conceptual\Civil\WOLT06-C-03.dwg 9/23/2010 10:52:05 AM Koethe, Eric

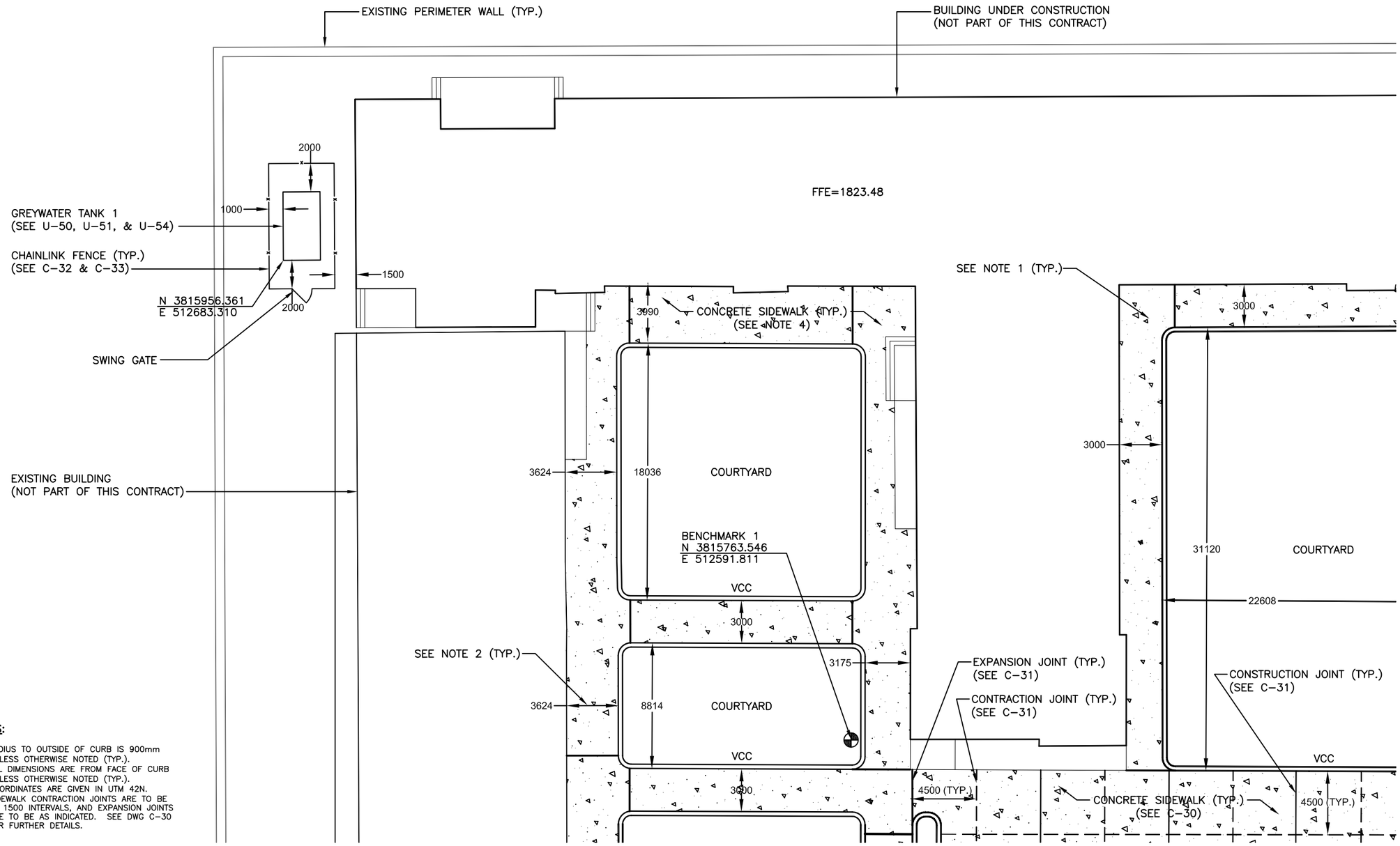

NOTES:

1) RADIUS TO OUTSIDE OF CURB IS 900mm UNLESS OTHERWISE NOTED (TYP.).
2) ALL DIMENSIONS ARE FROM FACE OF CURB UNLESS OTHERWISE NOTED (TYP.).
3) COORDINATES ARE GIVEN IN UTM 42N.
4) SIDEWALK CONTRACTION JOINTS ARE TO BE AT 1500 INTERVALS, AND EXPANSION JOINTS ARE TO BE AS INDICATED. SEE DWG C-30 FOR FURTHER DETAILS.

SITE LAYOUT PLAN
SCALE 1:150

UNLESS OTHERWISE NOTED, LINEAR DIMENSIONS SHOWN ARE IN MILLIMETERS.

5 0 5 10
1:150
NOTE: A3 SIZE REDUCED TO HALF SCALE.

BID DOCUMENT SUBMITTAL

SYMB	SUBMITTAL/REVISION DESCRIPTION	DATE	APR
B	BID DOCUMENT SUBMITTAL	09/26/10	BRG
A	95% DESIGN SUBMITTAL	08/19/10	BRG

This project was made possible by the United States Agency for International Development and the generous support of the American People through USAID Global Architecture and Engineering IQC Contracts.

DESIGNED BY: JLH
DATE: 09-26-10
DRAWN BY: ARC
SUBMITTED BY: TETRA TECH
CHECKED BY: KWC
CAD FILE NAME: WOLT06-C-10

USAID FROM THE AMERICAN PEOPLE

A E S P

USAID – OIEE
SARDAR GIRLS HIGH SCHOOL
KABUL, AFGHANISTAN

SITE LAYOUT PLAN
SHEET 1 OF 4

SHEET REFERENCE NUMBER:
LT0006
C-10

Z:\127-1298-10001\Work Orders\WO-LT\WO-LT-0006 SGHS Utility Design\CAD\Conceptual\Civil\WOLT06-C-10.dwg 9/23/2010 10:58:30 AM Koethe, Eric

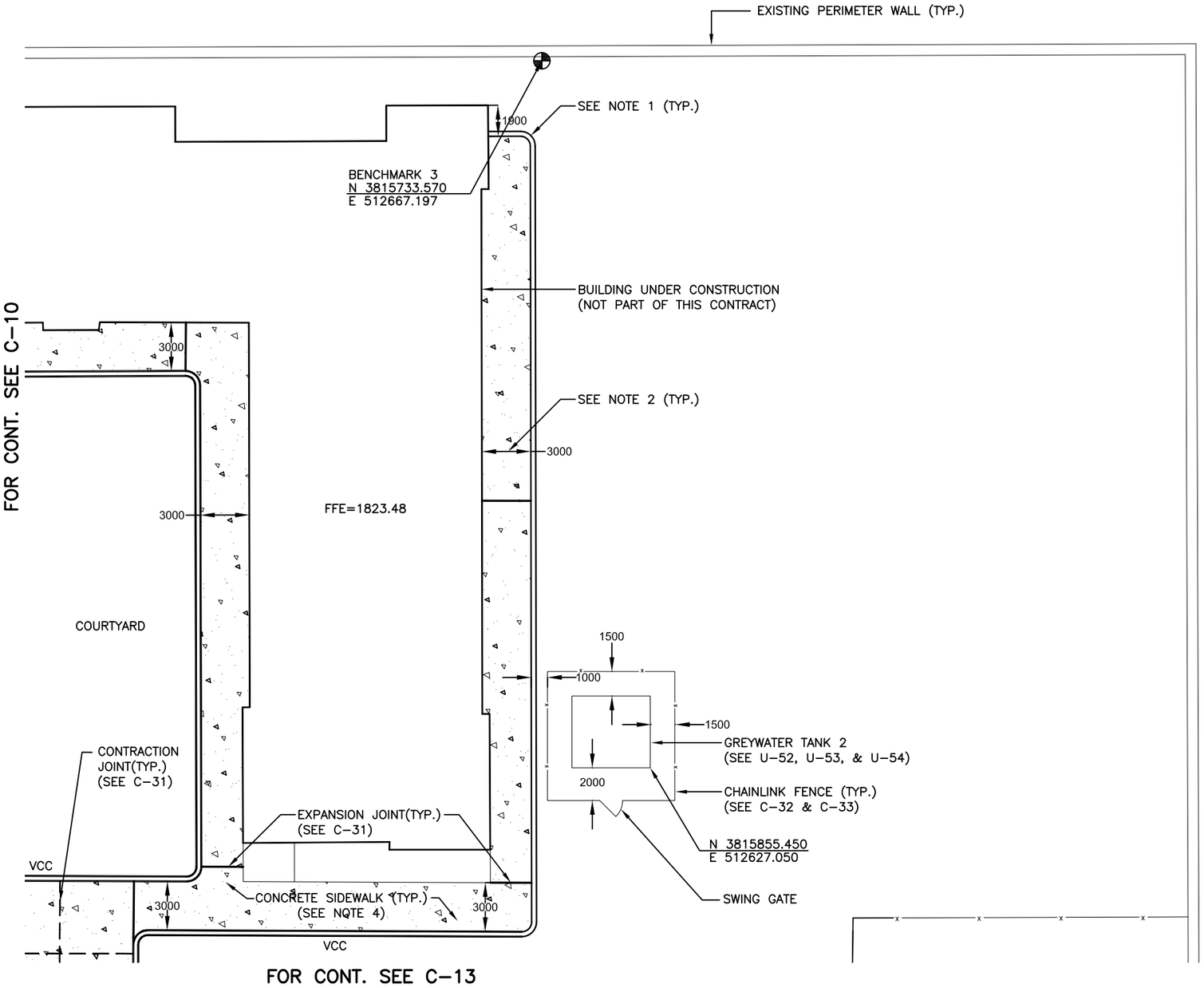

SITE LAYOUT PLAN

SCALE 1:150

UNLESS OTHERWISE NOTED, LINEAR DIMENSIONS SHOWN ARE IN MILLIMETERS.

NOTES:

1) RADIUS TO OUTSIDE OF CURB IS 900mm UNLESS OTHERWISE NOTED (TYP.).
2) ALL DIMENSIONS ARE FROM FACE OF CURB UNLESS OTHERWISE NOTED (TYP.).
3) COORDINATES ARE GIVEN IN UTM 42N.
4) SIDEWALK CONTRACTION JOINTS ARE TO BE AT 1500 INTERVALS, AND EXPANSION JOINTS ARE TO BE AS INDICATED ON THE DRAWING. SEE DWG C-30 FOR FURTHER DETAILS.

5 0 5 10
1:150
NOTE: A3 SIZE REDUCED TO HALF SCALE.

BID DOCUMENT SUBMITTAL

This project was made possible by the United States Agency for International Development and the generous support of the American People through USAID Global Architecture and Engineering IQC Contracts.

SYMB	SUBMITTAL/REVISION DESCRIPTION	DATE	APR
B	BID DOCUMENT SUBMITTAL	09/26/10	BRG
A	95% DESIGN SUBMITTAL	08/19/10	BRG

DESIGNED BY: JLH
DATE: 09-26-10
DRAWN BY: ARC
SUBMITTED BY: TETRA TECH
CHECKED BY: KWC
CAD FILE NAME: WOLT06-C-11

USAID FROM THE AMERICAN PEOPLE

A E S P

USAID – OIEE
SARDAR GIRLS HIGH SCHOOL
KABUL, AFGHANISTAN

SITE LAYOUT PLAN
SHEET 2 OF 4

SHEET REFERENCE NUMBER:
LT0006
C-11

Z:\127-1298-10001\Work Orders\WO-LT\WO-LT-0006 SGHS Utility Design\CAD\Conceptual\Civil\WOLT06-C-11.dwg 9/23/2010 11:05:09 AM Koethe, Eric

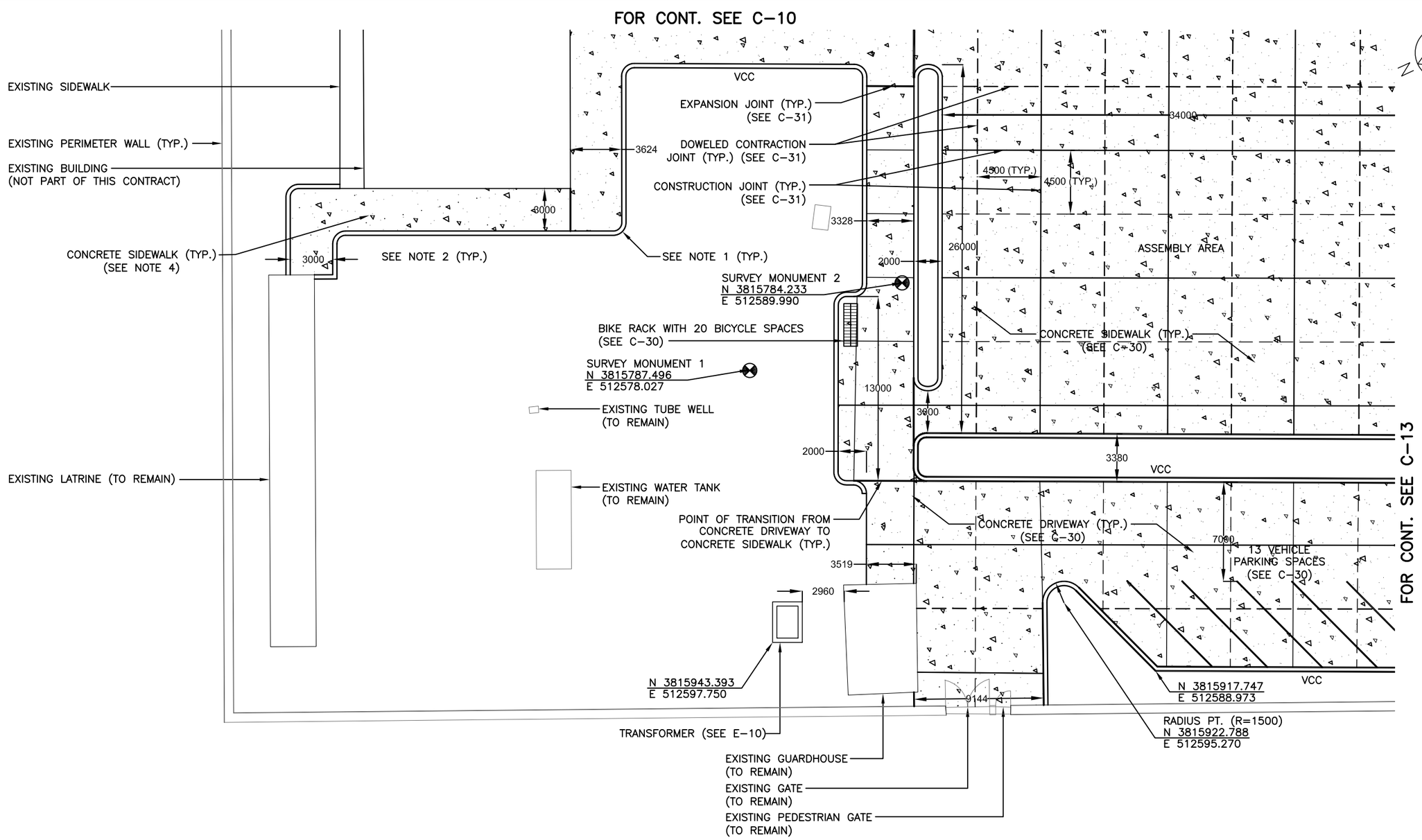

NOTES:

1) RADIUS TO OUTSIDE OF CURB IS 900mm UNLESS OTHERWISE NOTED (TYP.).
2) ALL DIMENSIONS ARE FROM FACE OF CURB UNLESS OTHERWISE NOTED (TYP.).
3) COORDINATES ARE GIVEN IN UTM 42N.
4) SIDEWALK CONTRACTION JOINTS ARE TO BE AT 1500 INTERVALS, AND EXPANSION JOINTS ARE TO BE AS INDICATED ON THIS DRAWING. SEE DWG C-30 FOR FURTHER DETAILS.

SITE LAYOUT PLAN

SCALE 1:150

UNLESS OTHERWISE NOTED, LINEAR DIMENSIONS SHOWN ARE IN MILLIMETERS.

5 0 5 10
1:150
NOTE: A3 SIZE REDUCED TO HALF SCALE.

BID DOCUMENT SUBMITTAL

SYMB	SUBMITTAL/REVISION DESCRIPTION	DATE	APR
B	BID DOCUMENT SUBMITTAL	09/26/10	BRG
A	95% DESIGN SUBMITTAL	08/19/10	BRG

This project was made possible by the United States Agency for International Development and the generous support of the American People through USAID Global Architecture and Engineering IQC Contracts.

DESIGNED BY: JLH
DATE: 09-26-10
DRAWN BY: ARC
SUBMITTED BY: TETRA TECH
CHECKED BY: KWC
CAD FILE NAME: WOLT06-C-12

USAID FROM THE AMERICAN PEOPLE

A E S P

USAID – OIEE
SARDAR GIRLS HIGH SCHOOL
KABUL, AFGHANISTAN

SITE LAYOUT PLAN
SHEET 3 OF 4

SHEET REFERENCE NUMBER:
LT0006
C-12

Z:\127-1298-10001\Work Orders\WO-LT\WO-LT-0006 SGHS Utility Design\CAD\Conceptual\Civil\WOLT06-C-12.dwg 9/23/2010 11:10:02 AM Koethe, Eric

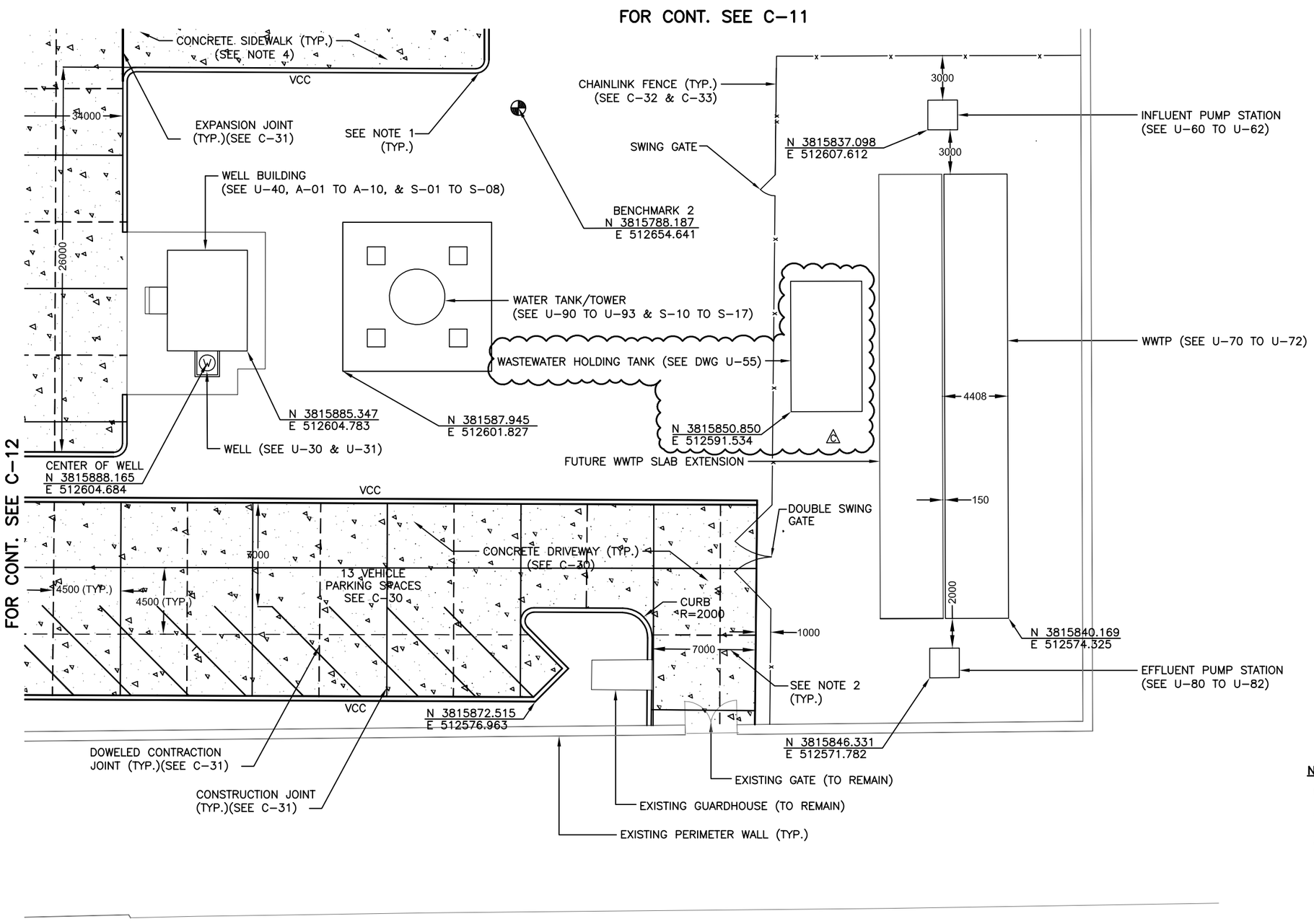

SITE LAYOUT PLAN

SCALE 1:150

UNLESS OTHERWISE NOTED, LINEAR DIMENSIONS SHOWN ARE IN MILLIMETERS.

NOTES:

1) RADIUS TO OUTSIDE OF CURB IS 900mm UNLESS OTHERWISE NOTED (TYP.).
2) ALL DIMENSIONS ARE FROM FACE OF CURB UNLESS OTHERWISE NOTED (TYP.).
3) COORDINATES ARE GIVEN IN UTM 42N.
4) SIDEWALK CONTRACTION JOINTS ARE TO BE AT 1500 INTERVALS, AND EXPANSION JOINTS ARE TO BE AS INDICATED ON THIS DRAWING. SEE DWG C-30 FOR FURTHER DETAILS.

5 0 5 10
1:150
NOTE: A3 SIZE REDUCED TO HALF SCALE.

BID DOCUMENT SUBMITTAL

SYMB	SUBMITTAL/REVISION DESCRIPTION	DATE	APR
C	ADDED WASTEWATER HOLDING TANK	12/09/10	BRG
B	BID DOCUMENT SUBMITTAL	09/26/10	BRG
A	95% DESIGN SUBMITTAL	08/19/10	BRG

This project was made possible by the United States Agency for International Development and the generous support of the American People through USAID Global Architecture and Engineering IQC Contracts.

DESIGNED BY: JLH
DATE: 12-09-10
DRAWN BY: ARC
SUBMITTED BY: TETRA TECH
CHECKED BY: KWC
CAD FILE NAME: WOLT06-C-13

USAID FROM THE AMERICAN PEOPLE

A E S P

USAID – OIEE
SARDAR GIRLS HIGH SCHOOL
KABUL, AFGHANISTAN

SITE LAYOUT PLAN
SHEET 4 OF 4

SHEET REFERENCE NUMBER:
LT0006
C-13

P:\1298\Work Orders\WO-LT\WO-LT-0006 SGHS Utility Design\CAD\Conceptual\Civil\WOLT06-C-13.dwg 12/12/2010 9:36:11 AM Fazelpoor, Behroz

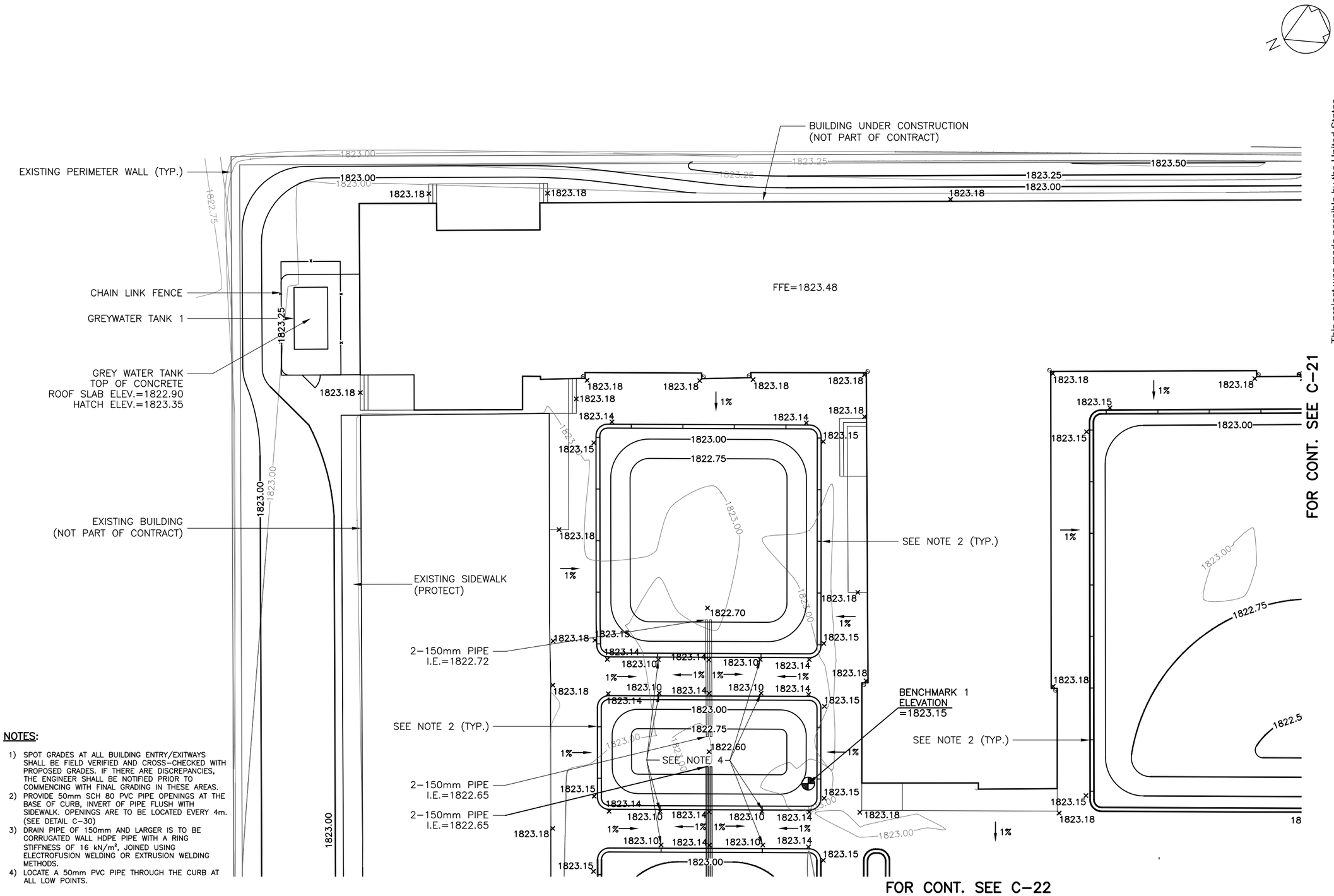

NOTES:

1) SPOT GRADES AT ALL BUILDING ENTRY/EXITWAYS SHALL BE FIELD VERIFIED AND CROSS-CHECKED WITH PROPOSED GRADES. IF THERE ARE DISCREPANCIES, THE ENGINEER SHALL BE NOTIFIED PRIOR TO COMMENCING WITH FINAL GRADING IN THESE AREAS.
2) PROVIDE 50mm SCH 80 PVC PIPE OPENINGS AT THE BASE OF CURB, INVERT OF PIPE FLUSH WITH SIDEWALK. OPENINGS ARE TO BE LOCATED EVERY 4m. (SEE DETAIL C-30)
3) DRAIN PIPE OF 150mm AND LARGER IS TO BE CORRUGATED WALL HDPE PIPE WITH A RING STIFFNESS OF 16 kN/m², JOINED USING ELECTROFUSION WELDING OR EXTRUSION WELDING METHODS.
4) LOCATE A 50mm PVC PIPE THROUGH THE CURB AT ALL LOW POINTS.

GRADING & DRAINAGE PLAN
SCALE 1:150

UNLESS OTHERWISE NOTED, LINEAR DIMENSIONS SHOWN ARE IN MILLIMETERS.

5 0 5 10
1:150
NOTE: A3 SIZE REDUCED TO HALF SCALE.

BID DOCUMENT SUBMITTAL

SYMB	SUBMITTAL/REVISION DESCRIPTION	DATE	APR
B	BID DOCUMENT SUBMITTAL	09/26/10	BRG
A	95% DESIGN SUBMITTAL	08/19/10	BRG

This project was made possible by the United States Agency for International Development and the generous support of the American People through USAID Global Architecture and Engineering IQC Contracts.

DESIGNED BY: JLH
DATE: 09-26-10
DRAWN BY: ARC
SUBMITTED BY: TETRA TECH
CHECKED BY: KWC
CAD FILE NAME: WOLT06-C-20

USAID FROM THE AMERICAN PEOPLE

A E S P

USAID – OIEE
SARDAR GIRLS HIGH SCHOOL
KABUL, AFGHANISTAN

GRADING & DRAINAGE PLAN
SHEET 1 OF 4

SHEET REFERENCE NUMBER:
LT0006
C-20

Z:\127-1298-10001\Work Orders\WO-LT\WO-LT-0006 SGHS Utility Design\CAD\Conceptual\Civil\WOLT06-C-20.dwg 9/23/2010 11:17:00 AM Koethe, Eric

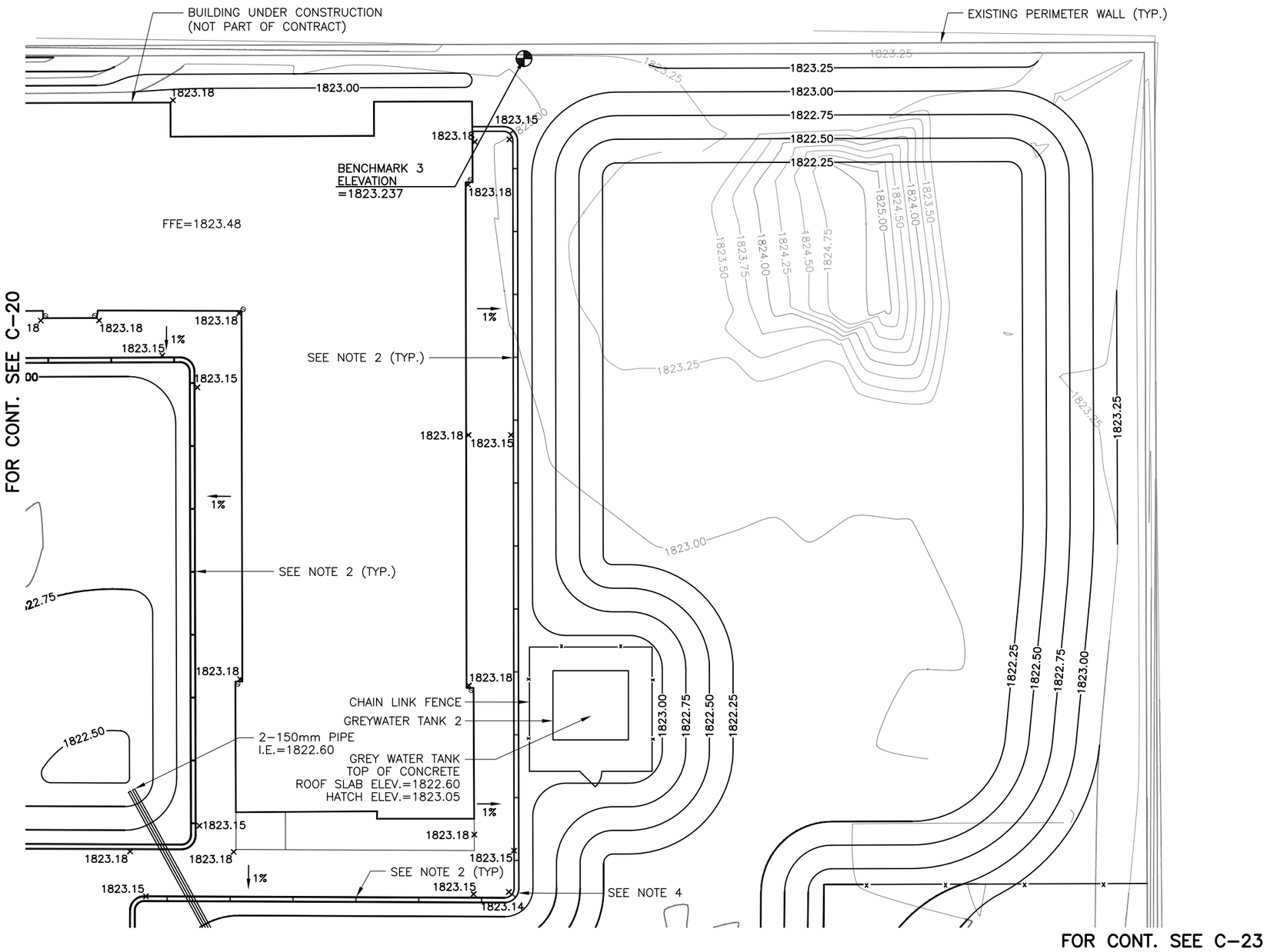

GRADING & DRAINAGE PLAN

SCALE 1:150

UNLESS OTHERWISE NOTED, LINEAR DIMENSIONS SHOWN ARE IN MILLIMETERS.

NOTES:

1) SPOT GRADES AT ALL BUILDING ENTRY/EXITWAYS SHALL BE FIELD VERIFIED AND CROSS-CHECKED WITH PROPOSED GRADES. IF THERE ARE DISCREPANCIES, THE ENGINEER SHALL BE NOTIFIED PRIOR TO COMMENCING WITH FINAL GRADING IN THESE AREAS.
2) PROVIDE 50mm SCH 80 PVC PIPE OPENINGS AT THE BASE OF CURB, INVERT OF PIPE FLUSH WITH SIDEWALK. OPENINGS ARE TO BE LOCATED EVERY 4m. (SEE DETAIL C-30)
3) DRAIN PIPE OF 150mm AND LARGER IS TO BE CORRUGATED WALL HDPE PIPE WITH A RING STIFFNESS OF 16 kN/m², JOINED USING ELECTROFUSION WELDING OR EXTRUSION WELDING METHODS.
4) LOCATE A 50mm PVC PIPE THROUGH THE CURB AT ALL LOW POINTS.

5 0 5 10
1:150
NOTE: A3 SIZE REDUCED TO HALF SCALE.

BID DOCUMENT SUBMITTAL

SYMB	SUBMITTAL/REVISION DESCRIPTION	DATE	APR
B	BID DOCUMENT SUBMITTAL	09/26/10	BRG
A	95% DESIGN SUBMITTAL	08/19/10	BRG

This project was made possible by the United States Agency for International Development and the generous support of the American People through USAID Global Architecture and Engineering IQC Contracts.

DESIGNED BY: JLH
DATE: 09-26-10
DRAWN BY: ARC
SUBMITTED BY: TETRA TECH
CHECKED BY: KWC
CAD FILE NAME: WOLT06-C-21

USAID FROM THE AMERICAN PEOPLE

A E S P

USAID – OIEE
SARDAR GIRLS HIGH SCHOOL
KABUL, AFGHANISTAN

GRADING & DRAINAGE PLAN
SHEET 2 OF 4

SHEET REFERENCE NUMBER:
LT0006
C-21

Z:\127-1298-10001\Work Orders\WO-LT\WO-LT-0006 SGHS Utility Design\CAD\Conceptual\Civil\WOLT06-C-21.dwg 9/23/2010 11:21:47 AM Koethe, Eric

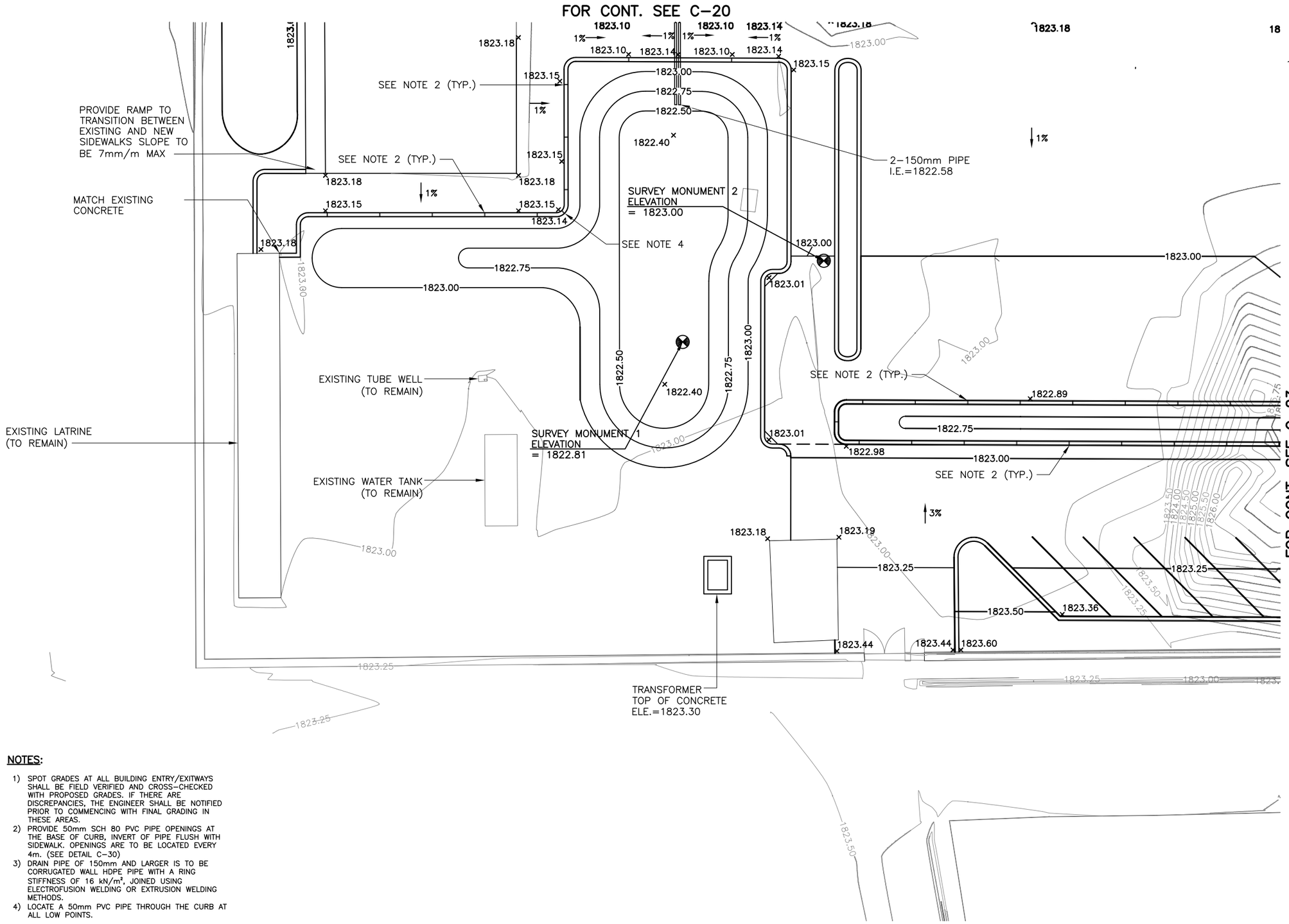

NOTES:

1) SPOT GRADES AT ALL BUILDING ENTRY/EXITWAYS SHALL BE FIELD VERIFIED AND CROSS-CHECKED WITH PROPOSED GRADES. IF THERE ARE DISCREPANCIES, THE ENGINEER SHALL BE NOTIFIED PRIOR TO COMMENCING WITH FINAL GRADING IN THESE AREAS.
2) PROVIDE 50mm SCH 80 PVC PIPE OPENINGS AT THE BASE OF CURB, INVERT OF PIPE FLUSH WITH SIDEWALK. OPENINGS ARE TO BE LOCATED EVERY 4m. (SEE DETAIL C-30)
3) DRAIN PIPE OF 150mm AND LARGER IS TO BE CORRUGATED WALL HDPE PIPE WITH A RING STIFFNESS OF 16 kN/m^2, JOINED USING ELECTROFUSION WELDING OR EXTRUSION WELDING METHODS.
4) LOCATE A 50mm PVC PIPE THROUGH THE CURB AT ALL LOW POINTS.

GRADING & DRAINAGE PLAN

SCALE 1:150

UNLESS OTHERWISE NOTED, LINEAR DIMENSIONS SHOWN ARE IN MILLIMETERS.

5 0 5 10
1:150
NOTE: A3 SIZE REDUCED TO HALF SCALE.

BID DOCUMENT SUBMITTAL

SYMB	SUBMITTAL/REVISION DESCRIPTION	DATE	APR
B	BID DOCUMENT SUBMITTAL	09/26/10	BRG
A	95% DESIGN SUBMITTAL	08/19/10	BRG

This project was made possible by the United States Agency for International Development and the generous support of the American People through USAID Global Architecture and Engineering IQC Contracts.

DESIGNED BY: JLH
DATE: 09-26-10
DRAWN BY: ARC
SUBMITTED BY: TETRA TECH
CHECKED BY: KWC
CAD FILE NAME: WOLT06-C-22

USAID FROM THE AMERICAN PEOPLE

A E S P

USAID – OIEE
SARDAR GIRLS HIGH SCHOOL
KABUL, AFGHANISTAN

GRADING & DRAINAGE PLAN
SHEET 3 OF 4

SHEET REFERENCE NUMBER:
LT0006
C-22

Z:\127-1298-10001\Work Orders\WO-LT\WO-LT-0006 SGHS Utility Design\CAD\Conceptual\Civil\WOLT06-C-22.dwg 9/23/2010 11:38:20 AM Koethe, Eric

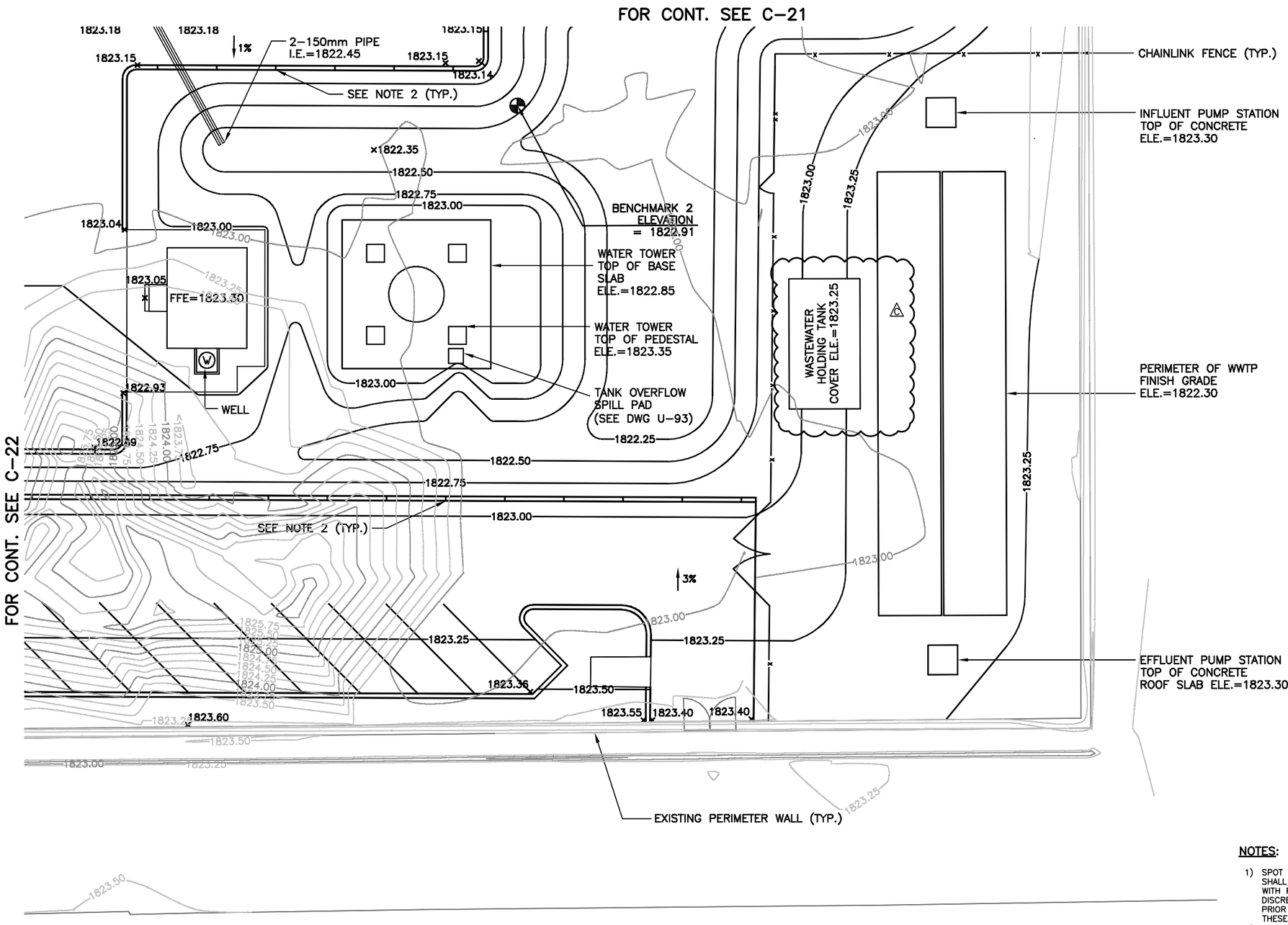

NOTES:

1) SPOT GRADES AT ALL BUILDING ENTRY/EXITWAYS SHALL BE FIELD VERIFIED AND CROSS-CHECKED WITH PROPOSED GRADES. IF THERE ARE DISCREPANCIES, THE ENGINEER SHALL BE NOTIFIED PRIOR TO COMMENCING WITH FINAL GRADING IN THESE AREAS.
2) PROVIDE 50mm SCH 80 PVC PIPE OPENINGS AT BASE OF CURB, INVERT OF PIPE FLUSH WITH SIDEWALK. OPENINGS ARE TO BE LOCATED EVERY 4m. (SEE DETAIL C-30)
3) DRAIN PIPE OF 150mm AND LARGER IS TO BE CORRUGATED WALL HDPE PIPE WITH A RING STIFFNESS OF 16 kN/m², JOINED USING ELECTROFUSION WELDING OR EXTRUSION WELDING METHODS.
4) LOCATE A 50mm PVC PIPE THROUGH THE CURB AT ALL LOW POINTS.

GRADING & DRAINAGE PLAN
SCALE 1:150

UNLESS OTHERWISE NOTED, LINEAR DIMENSIONS SHOWN ARE IN MILLIMETERS.

5 0 5 10
1:150
NOTE: A3 SIZE REDUCED TO HALF SCALE.

BID DOCUMENT SUBMITTAL

SYMB	SUBMITTAL/REVISION DESCRIPTION	DATE	APR
C	ADDED WASTEWATER HOLDING TANK	12/09/10	BRG
B	BID DOCUMENT SUBMITTAL	09/26/10	BRG
A	95% DESIGN SUBMITTAL	08/19/10	BRG

This project was made possible by the United States Agency for International Development and the generous support of the American People through USAID Global Architecture and Engineering IQC Contracts.

DESIGNED BY: JLH
DATE: 12-09-10
DRAWN BY: ARC
SUBMITTED BY: TETRA TECH
CHECKED BY: KWC
CAD FILE NAME: WOLT06-C-23

USAID FROM THE AMERICAN PEOPLE

A E S P

USAID – OIEE
SARDAR GIRLS HIGH SCHOOL
KABUL, AFGHANISTAN

GRADING & DRAINAGE PLAN
SHEET 4 OF 4

SHEET REFERENCE NUMBER:
LT0006
C-23

P:\1298\Work Orders\WO-LT\WO-LT-0006 SGHS Utility Design\CAD\Conceptual\Civil\WOLT06-C-23.dwg 12/12/2010 9:38:34 AM Fazelpoor, Behroz

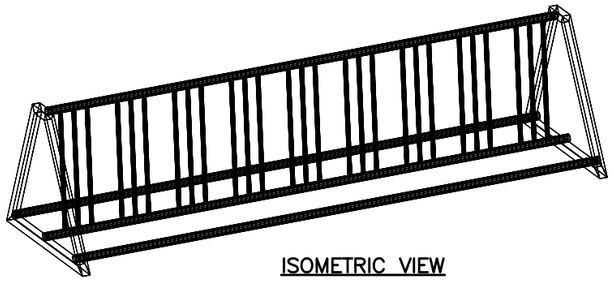

ISOMETRIC VIEW
N.T.S.

NOTES:
1) AFTER FABRICATION, BICYCLE RACK IS TO BE PRIME COATED WITH EPOXY PAINT, AND FINISH COATED WITH POLYURETHANE PAINT, PER SECTION 09 90 00 OF THE SPECIFICATIONS.
2) PROVIDE A SUBMITTAL PRIOR TO FABRICATION WORK TO INCLUDE A SHOP DRAWING, WELD DETAILS, AND INFORMATION ON THE PAINT AND PAINTING PROCEDURES.

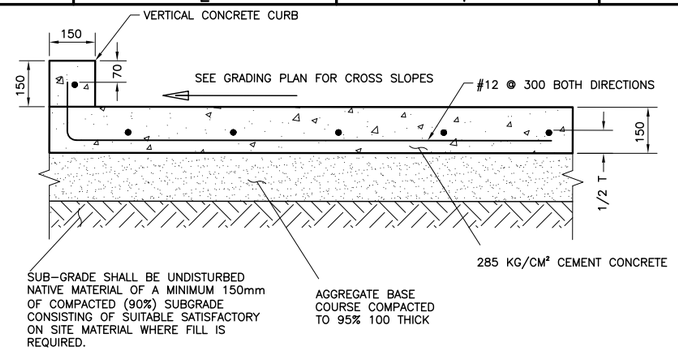

CONCRETE DRIVEWAY/PARKING LOT DETAIL
SCALE 1:10

NOTES:
1) CONTRACTION AND CONSTRUCTION JOINTS ARE TO BE LOCATED AS SHOWN IN THE DRAWINGS. (SEE C-10 TO C-13)
2) SEE C-31 FOR CONTRACTION AND CONSTRUCTION JOINT DETAILS.

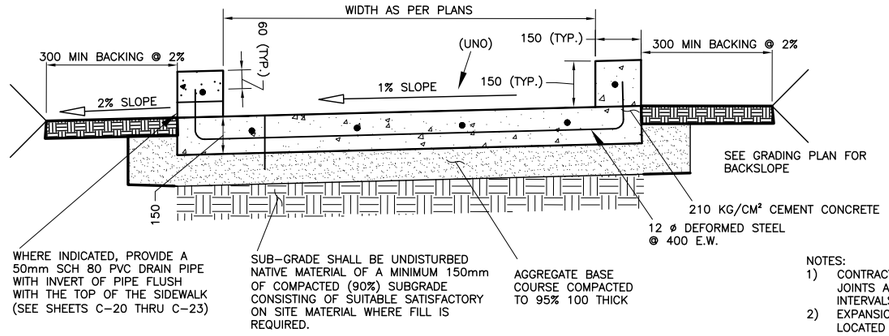

TYPICAL CONCRETE SIDEWALK DETAIL
SCALE 1:10

NOTES:
1) CONTRACTION AND CONSTRUCTION JOINTS ARE TO BE LOCATED AT 1500 INTERVALS.
2) EXPANSION JOINTS ARE TO BE LOCATED AS SHOWN ON THE DRAWINGS. (C-10 TO C-13)
3) SEE C-31 FOR EXPANSION JOINT DETAIL.

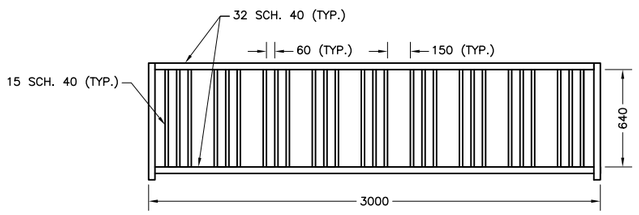

BICYCLE RACK DETAIL
SCALE 1:20

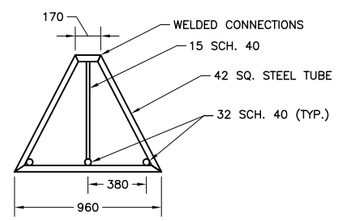

END DETAIL
SCALE 1:20

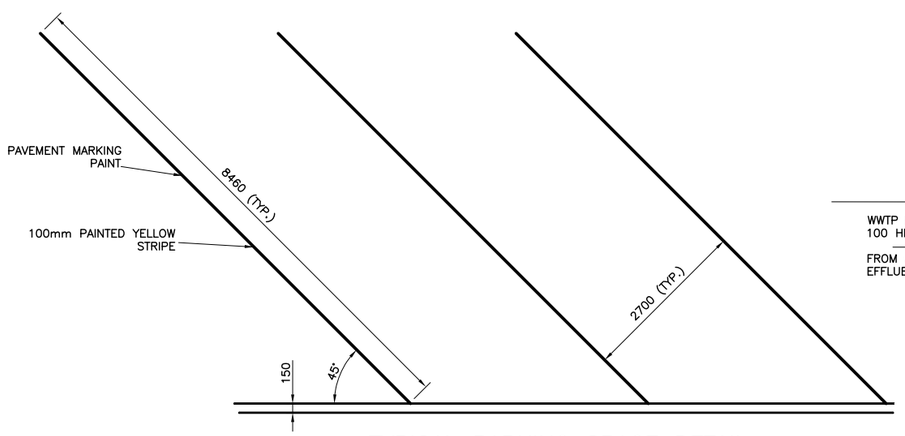

TYPICAL PARKING SPACE DETAIL
SCALE 1:50

NOTE:
ALL CONCRETE SHALL BE POURED IN THE DRY

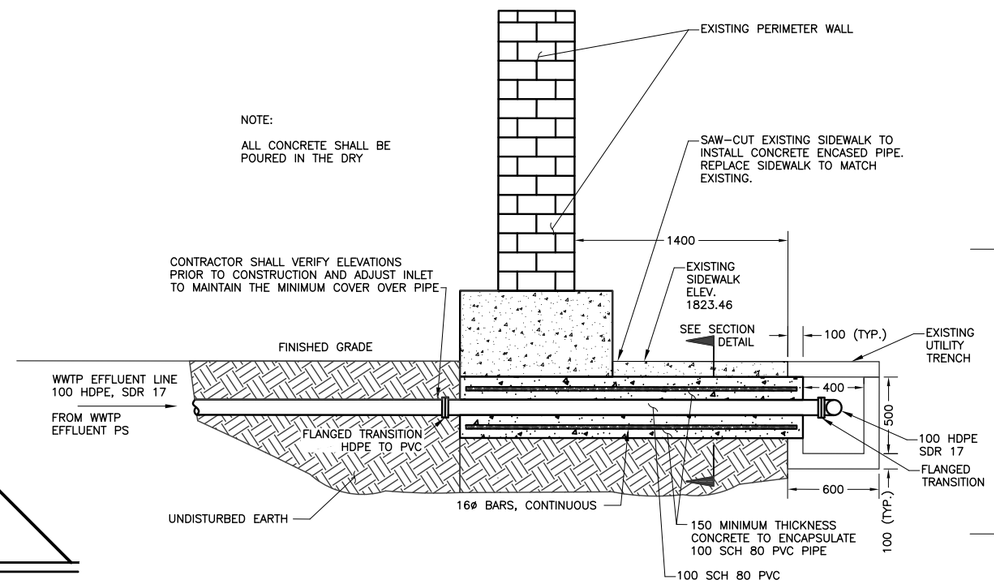

WALL PENETRATION DETAIL
SCALE 1:20

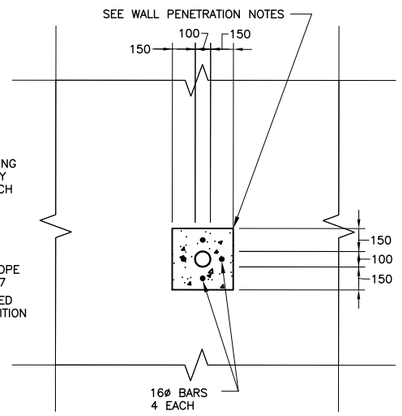

SECTION DETAIL
SCALE 1:20

UNLESS OTHERWISE NOTED, LINEAR DIMENSIONS SHOWN ARE IN MILLIMETERS.

NOTE: A3 SIZE REDUCED TO HALF SCALE.

BID DOCUMENT SUBMITTAL

SYMB	SUBMITTAL/REVISION DESCRIPTION	DATE	APR
B	BID DOCUMENT SUBMITTAL	09/26/10	BRG
A	95% DESIGN SUBMITTAL	08/19/10	BRG

This project was made possible by the United States Agency for International Development and the generous support of the American People through USAID Global Architecture and Engineering IQC Contracts.

DESIGNED BY: JLH
DATE: 09-26-10
DRAWN BY: ARC
SUBMITTED BY: TETRA TECH
CHECKED BY: KWC
CAD FILE NAME: WOLT06-C-30

USAID FROM THE AMERICAN PEOPLE

A E S P

USAID – OIEE
SARDAR GIRLS HIGH SCHOOL
KABUL, AFGHANISTAN

SITE & GRADING DETAILS
SHEET 1 OF 4

SHEET REFERENCE NUMBER:
LT0006
C-30

Z:\127-1298-10001\Work Orders\WO-LT\WO-LT-0006 SGHS Utility Design\CAD\Conceptual\Civil\WOLT06-C-30.dwg 9/23/2010 11:55:34 AM Koethe, Eric

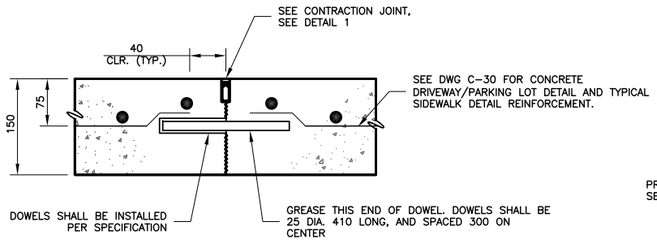

DOWELED CONTRACTION JOINT DETAIL
N.T.S.

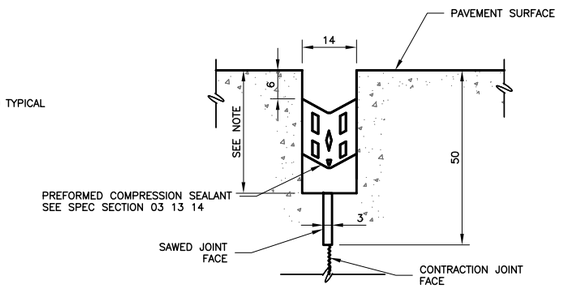

NOTE:

DEPTH AS RECOMMENDED BY MANUFACTURER PER TYPE OF SEAL BEING USED (DEPTH NOT LESS THAN 38)

DETAIL 1 – CONTRACTION JOINT DETAIL
N.T.S.

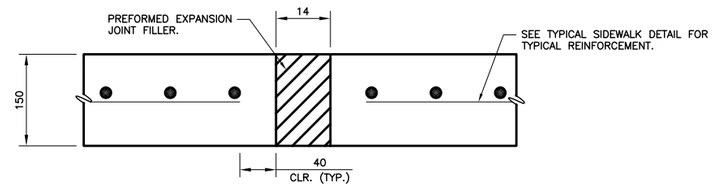

NOTE:

SIDEWALK CONTRACTION JOINTS ARE TO BE IN ACCORDANCE WITH SPECIFICATION 32 16 13.

SIDEWALK EXPANSION JOINT DETAIL
N.T.S.

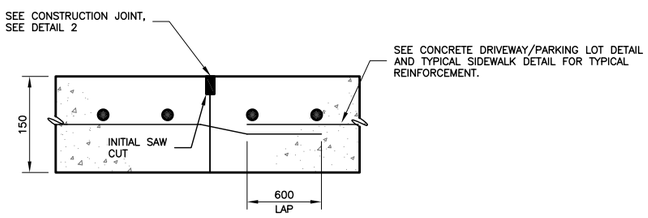

CONSTRUCTION JOINT DETAIL
N.T.S.

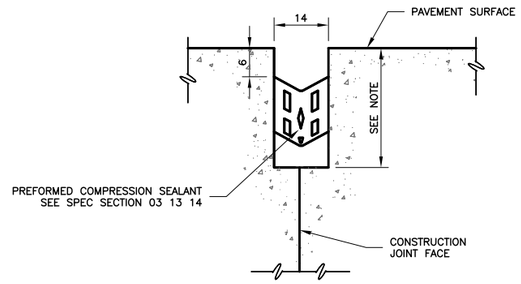

NOTE:

DEPTH AS RECOMMENDED BY MANUFACTURER PER TYPE OF SEAL BEING USED (DEPTH NOT LESS THAN 38)

DETAIL 2 – CONSTRUCTION JOINT DETAIL
N.T.S.

UNLESS OTHERWISE NOTED, LINEAR DIMENSIONS SHOWN ARE IN MILLIMETERS.

NOTE: A3 SIZE REDUCED TO HALF SCALE.

BID DOCUMENT SUBMITTAL

This project was made possible by the United States Agency for International Development and the generous support of the American People through USAID Global Architecture and Engineering IQC Contracts.

SYMB	SUBMITTAL/REVISION DESCRIPTION	DATE	APR
B	BID DOCUMENT SUBMITTAL	09/26/10	BRG
A	95% DESIGN SUBMITTAL	08/19/10	BRG

DESIGNED BY: RB
DATE: 09-26-10
DRAWN BY: ARC
SUBMITTED BY: TETRA TECH
CHECKED BY: KWC
CAD FILE NAME: WOLT06-C-31

USAID FROM THE AMERICAN PEOPLE

A E S P

USAID – OIEE
SARDAR GIRLS HIGH SCHOOL
KABUL, AFGHANISTAN

SITE & GRADING DETAILS
SHEET 2 OF 4

SHEET REFERENCE NUMBER:
LT0006
C-31

Z:\127-1298-10001\Work Orders\WO-LT\WO-LT-0006 SGHS Utility Design\CAD\Conceptual\Civil\WOLT06-C-31.dwg 9/23/2010 1:19:45 PM Koethe, Eric

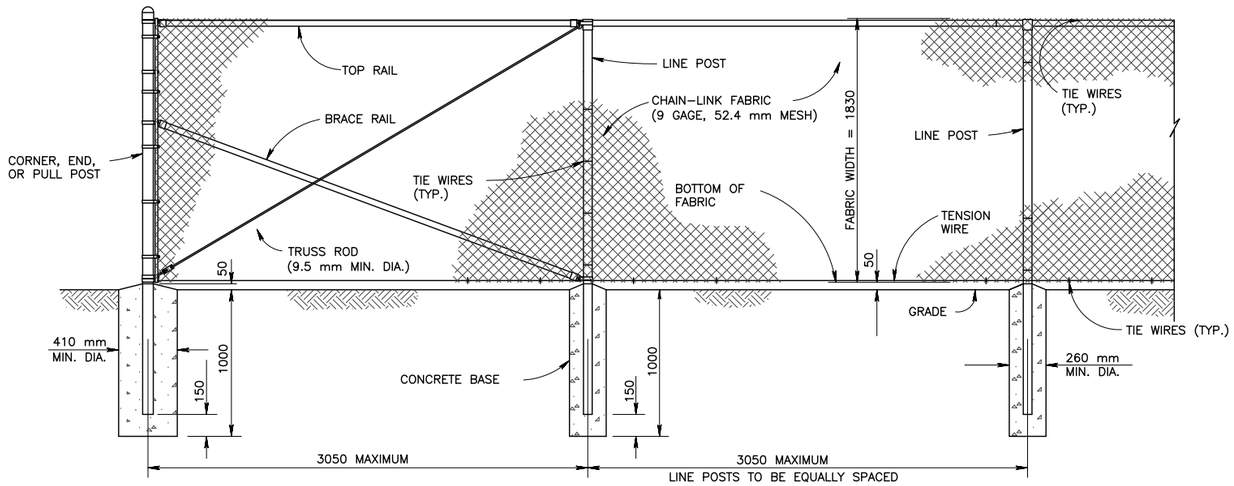

CHAIN–LINK SECURITY FENCE DETAIL
N.T.S.

STEEL POST SCHEDULE			
USE AND SECTION	MINIMUM OUTSIDE DIMENSIONS (NOMINAL)		
	FABRIC LESS THAN 1830 mm	FABRIC 1830 mm TO 2440 mm	FABRIC OVER 2440 mm
CORNER, END & PULL POSTS			
TUBULAR – ROUND	60.3 mm O.D.	73.0 mm O.D.	101.6 mm O.D.
TUBULAR – SQUARE	50.8 mm SQ.	63.5 mm SQ.	76.2 mm SQ.
C–SECTION (ROLL–FORMED)	88.9 mm x 88.9 mm	88.9 mm x 88.9 mm	———
LINE POSTS			
TUBULAR – ROUND	48.2 mm O.D.	60.3 mm O.D.	73.0 mm O.D.
H–SECTION	57.1 mm x 43.1 mm	57.1 mm x 42.1 mm	57.1 mm x 43.1 mm
C–SECTION (ROLL–FORMED)	47.6 mm x 41.2 mm	57.1 mm x 43.1 mm	———
TOP, BOTTOM & BRACE RAILS			
TUBULAR – ROUND	42.3 mm O.D.		
TUBULAR – SQUARE	38.1 mm O.D.		
H–SECTION	41.2 mm x 38.1 mm		
C–SECTION (ROLL–FORMED)	41.2 mm x 31.7 mm		

NOTES:

1. DETAILS SHOWN ARE TO CLARIFY REQUIREMENTS AND ARE NOT INTENDED TO LIMIT OTHER TYPES OF FENCE SECTIONS AND METHODS OF INSTALLATION.
2. WIRE TIES, RAILS, POSTS AND BRACES SHALL BE CONSTRUCTED ON THE SECURE SIDE OF THE FENCE ALIGNMENT. CHAIN–LINK FABRIC SHALL PLACED ON THE OPPOSITE SIDE OF THE SECURE AREA.
3. C–SECTION POSTS SHALL BE INSTALLED SO THAT THE VOID INSIDE THE POST IS COMPLETELY FILLED WITH CONCRETE UP TO THE TOP OF THE FOUNDATION.
4. FENCES SHALL BE GROUNDED ON EACH SIDE OF ALL GATES, AT EACH CORNER, AND WHERE THE FENCE ALIGNMENT CHANGES MORE THAN 15 DEGREES. GROUNDING LOCATIONS SHALL NOT EXCEED 198m (650 FT). EACH GATE PANEL SHALL BE BONDED WITH A FLEXIBLE BOND STRAP TO ITS GATE POST.
5. WHERE DRIVING THE GROUNDING ROD IS IMPRACTICAL, THEY SHALL BE BURIED A MINIMUM OF 305mm (12 IN) DEEP AND RADIAL FROM THE FENCE. THE CLOSEST END OF THE ELECTRODE SHALL NOT BE LESS THAN 610mm (2 FT) OR MORE THAN 2.4m (8 FT) FROM THE FENCE.
6. GROUND CONDUCTOR SHALL BE CLAMPED TO THE FENCE POST AND RODS TO CREATE ELECTRICAL CONTINUITY BETWEEN FENCE POSTS, FENCE FABRIC, AND GROUND RODS.
7. CHAIN LINK FENCE AND MATERIALS SHALL BE GALVANIZED.

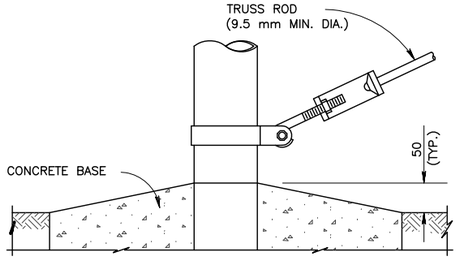

TRUSS ROD AND BAND

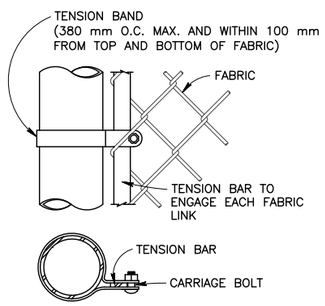

END OR GATE POST DETAIL

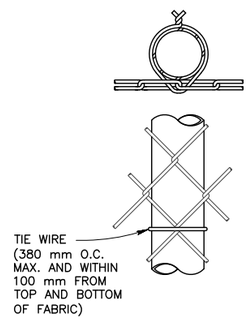

ROUND POST ATTACHMENT

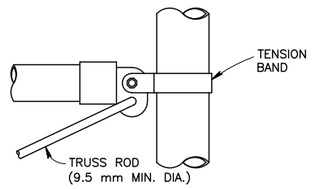

ROUND POST
BRACE RAIL CLAMP DETAILS

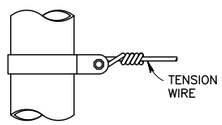

TENSION BAND DETAIL

FASTENING DETAILS
N.T.S.

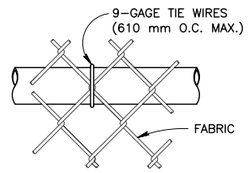

TOP OR BRACE RAIL ATTACHMENT

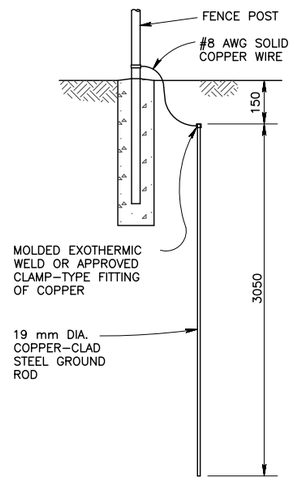

GROUNDING DETAIL
N.T.S.

UNLESS OTHERWISE NOTED, LINEAR DIMENSIONS SHOWN ARE IN MILLIMETERS.

NOTE: A3 SIZE REDUCED TO HALF SCALE.

This project was made possible by the United States Agency for International Development and the generous support of the American People through USAID Global Architecture and Engineering IQC Contracts.

BID DOCUMENT SUBMITTAL

SYMB	SUBMITTAL/REVISION DESCRIPTION	DATE	APR
B	BID DOCUMENT SUBMITTAL	09/26/10	BRG
A	95% DESIGN SUBMITTAL	08/19/10	BRG

DESIGNED BY: JLH
DATE: 09–26–10
DRAWN BY: ARC
SUBMITTED BY: TETRA TECH
CHECKED BY: KWC
CAD FILE NAME: WOLT06–C–32

USAID FROM THE AMERICAN PEOPLE

A E S P

USAID – OIEE
SARDAR GIRLS HIGH SCHOOL
KABUL, AFGHANISTAN

SITE & GRADING DETAILS
SHEET 3 OF 4

SHEET REFERENCE NUMBER:
LT0006
C–32

Z:\127–1298–10001\Work Orders\WO–LT\WO–LT–0006 SGHS Utility Design\CAD\Conceptual\Civil\WOLT06–C–32.dwg 9/23/2010 1:32:53 PM Koethe, Eric

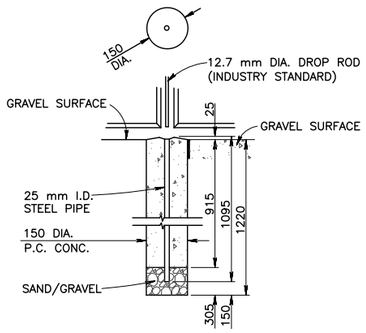

DROP ROD FOUNDATION

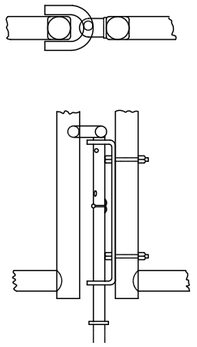

DROP ROD ASSEMBLY

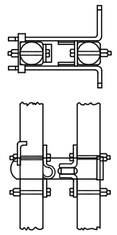

LATCH ASSEMBLY

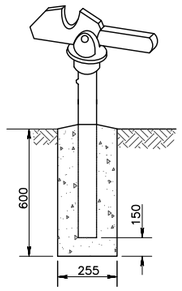

GATE KEEPER
(TO HOLD GATE OPEN)

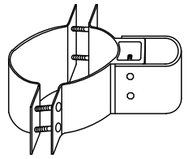

STANDARD HINGE

SWING GATE DETAILS
N.T.S.

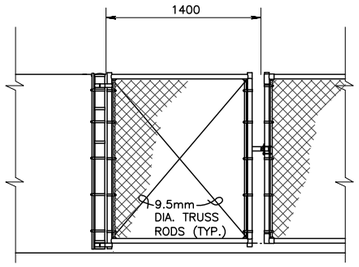

SINGLE SWING GATE
N.T.S.

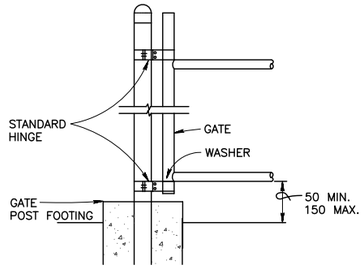

GATE POST DETAIL
N.T.S.

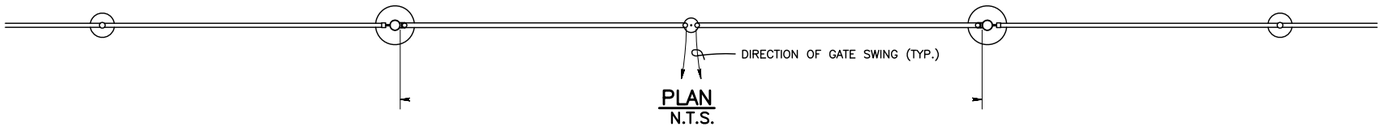

PLAN
N.T.S.

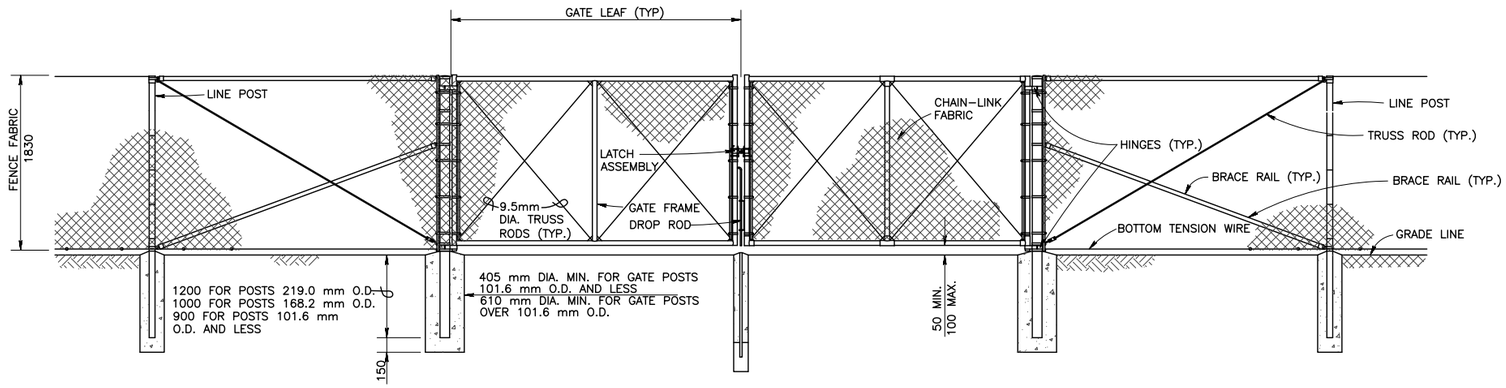

DOUBLE SWING GATE ELEVATION
N.T.S.

GATE POST SCHEDULE	
GATE LEAF WIDTH (NOMINAL)	OUTSIDE DIMENSION (NOMINAL)
1830 mm OR LESS	73.0 mm O.D. 63.5 mm SQ
MORE THAN 1830 mm TO 3960 mm	101.6 mm O.D.
MORE THAN 3960 mm TO 5480 mm	168.2 mm O.D.
MORE THAN 5480 mm	219.0 mm

NOTES:

1. DETAILS SHOWN ARE TO CLARIFY REQUIREMENTS AND ARE NOT INTENDED TO LIMIT OTHER TYPES OF FENCE SECTIONS AND METHODS OF INSTALLATION.
2. SWING GATES SHALL BE CONSTRUCTED WITH DROP RODS, PADLOCKS, LATCH ASSEMBLY, AND GATE KEEPERS EXCEPT AS NOTED.
3. ALL GATE FRAMES SHALL BE A MINIMUM 48.2 mm NOMINAL (ROUND) OR 50.8 mm NOMINAL (SQUARE). GATE FRAMES SHALL BE OF WELDED CONSTRUCTION OR SHALL BE ASSEMBLED USING HEAVY FITTINGS. AT THE CONTRACTOR'S OPTION A WELDED HORIZONTAL BRACE MAY BE USED IN LIEU OF TRUSS RODS TO BRACE ALL WELDED GATE FRAMES. THE CONTRACTOR SHALL BE RESPONSIBLE FOR THE PROPER RIGID CONSTRUCTION OF ALL GATES SUPPLIED.
4. CHAIN LINK FENCE AND MATERIALS SHALL BE GALVANIZED.

UNLESS OTHERWISE NOTED, LINEAR DIMENSIONS SHOWN ARE IN MILLIMETERS.

NOTE: A3 SIZE REDUCED TO HALF SCALE.

BID DOCUMENT SUBMITTAL

SYMB	SUBMITTAL/REVISION DESCRIPTION	DATE	APR
B	BID DOCUMENT SUBMITTAL	09/26/10	BRG
A	95% DESIGN SUBMITTAL	08/19/10	BRG

This project was made possible by the United States Agency for International Development and the generous support of the American People through USAID Global Architecture and Engineering IQC Contracts.

DESIGNED BY: JLH
DATE: 09-26-10
DRAWN BY: ARC
SUBMITTED BY: TETRA TECH
CHECKED BY: KWC
CAD FILE NAME: WOLT06-C-33

USAID FROM THE AMERICAN PEOPLE

A E S P

USAID – OIEE
SARDAR GIRLS HIGH SCHOOL
KABUL, AFGHANISTAN
SITE & GRADING DETAILS
SHEET 4 OF 4

SHEET REFERENCE NUMBER:
LT0006
C-33

Z:\127-1298-10001\Work Orders\WO-LT\WO-LT-0006 SGHS Utility Design\CAD\Conceptual\Civil\WOLT06-C-33.dwg 9/23/2010 1:34:26 PM Koethe, Eric

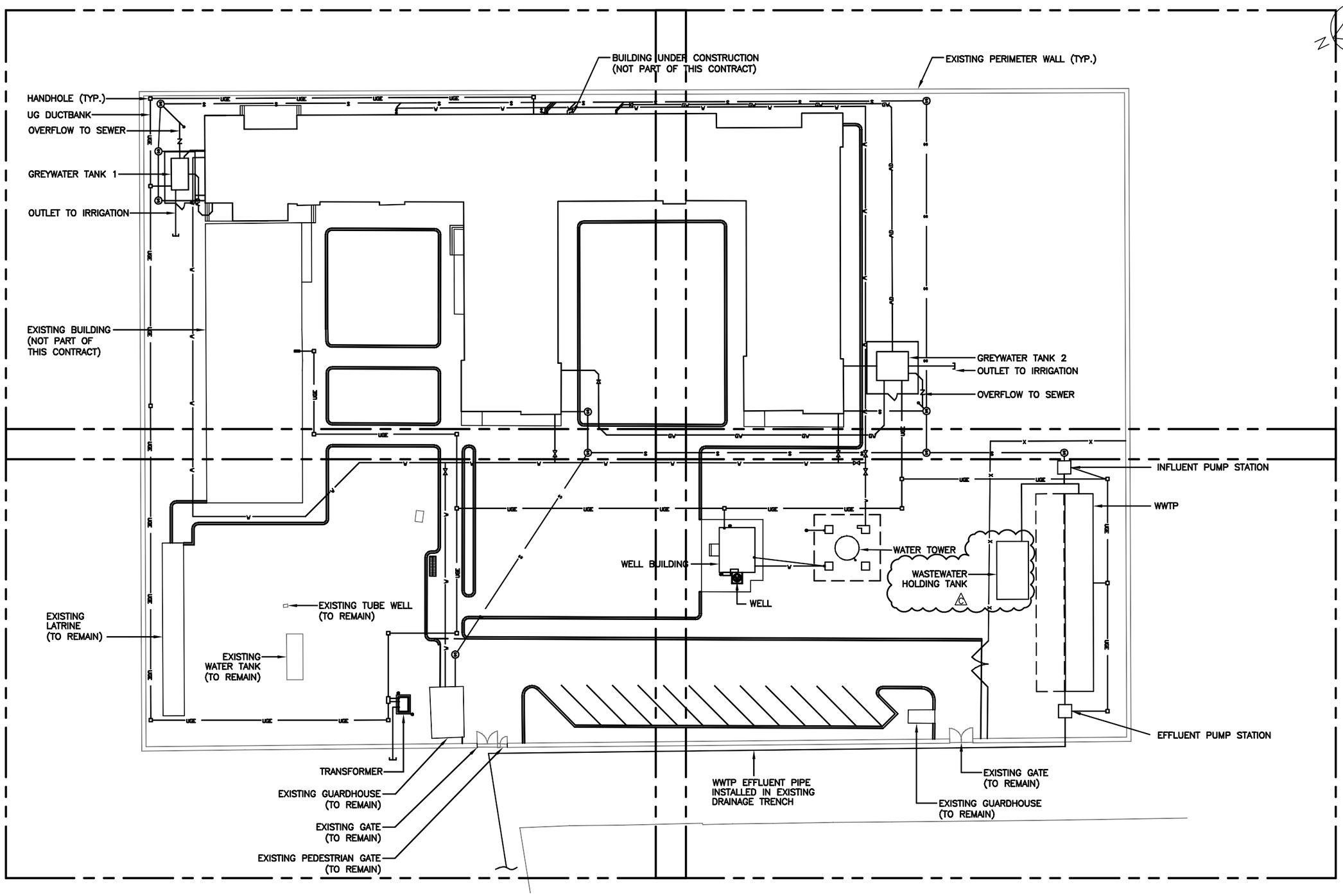

COMBINED SITE INFRASTRUCTURE PLAN FOR UTILITIES

SCALE 1:300

UNLESS OTHERWISE NOTED, LINEAR DIMENSIONS SHOWN ARE IN MILLIMETERS.

10 5 0 5 10 20
1:300
NOTE: A3 SIZE REDUCED TO HALF SCALE.

BID DOCUMENT SUBMITTAL

SYMB	SUBMITTAL/REVISION DESCRIPTION	DATE	APR
C	ADDED WASTEWATER HOLDING TANK	12/09/10	BRG
B	BID DOCUMENT SUBMITTAL	09/26/10	BRG
A	95% DESIGN SUBMITTAL	08/19/10	BRG

This project was made possible by the United States Agency for International Development and the generous support of the American People through USAID Global Architecture and Engineering IQC Contracts.

DESIGNED BY: JLH
DRAWN BY: ARC
CHECKED BY: KWC
DATE: 12-09-10
SUBMITTED BY: TETRA TECH
CAD FILE NAME: WOLT06-U-01

USAID FROM THE AMERICAN PEOPLE

A E S P

USAID – OIEE
SARDAR GIRLS HIGH SCHOOL
KABUL, AFGHANISTAN

COMBINED SITE INFRASTRUCTURE PLAN FOR UTILITIES

SHEET REFERENCE NUMBER:
LT0006
U-01

P:\1298\Work Orders\WO-LT\WO-LT-0006 SGHS Utility Design\CAD\Conceptual\Civil\WOLT06-U-01.dwg 12/12/2010 9:35:35 AM Fazelpoor, Behroz

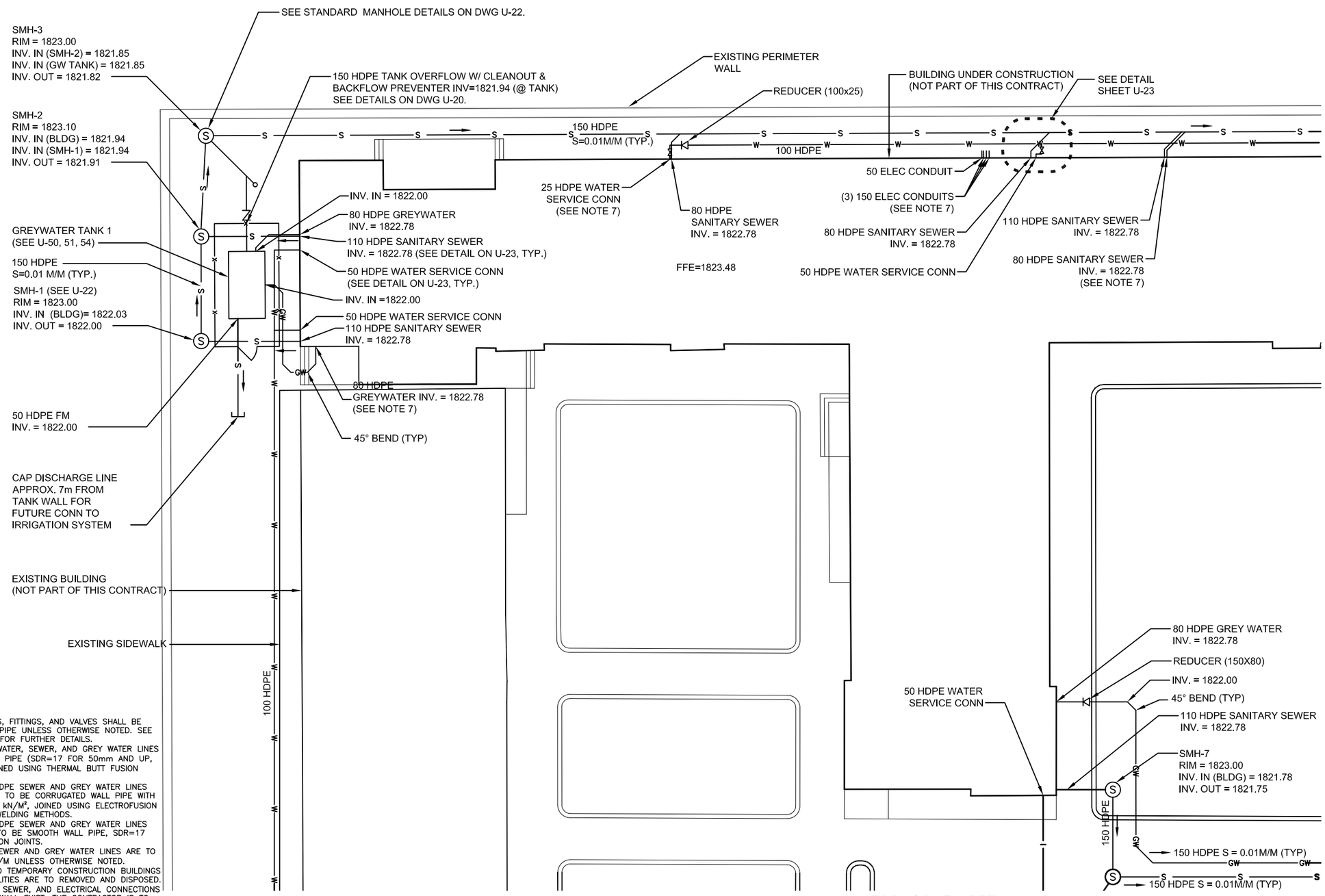

NOTES:

1) ALL ABOVE GROUND PIPES, FITTINGS, AND VALVES SHALL BE PAINTED CPVC OR STEEL PIPE UNLESS OTHERWISE NOTED. SEE SPECIFICATION 09 90 00 FOR FURTHER DETAILS.
2) ALL PRESSURIZED HDPE WATER, SEWER, AND GREY WATER LINES ARE TO BE SMOOTH WALL PIPE (SDR=17 FOR 50mm AND UP, SDR 7.4 FOR 25mm) JOINED USING THERMAL BUTT FUSION WELDING METHODS.
3) ALL NON-PRESSURIZED HDPE SEWER AND GREY WATER LINES FOR 150mm AND UP ARE TO BE CORRUGATED WALL PIPE WITH A RING STIFFNESS OF 16 kN/M², JOINED USING ELECTROFUSION WELDING OR EXTRUSION WELDING METHODS.
4) ALL NON-PRESSURIZED HDPE SEWER AND GREY WATER LINES LESS THAN 150mm ARE TO BE SMOOTH WALL PIPE, SDR=17 WITH THERMAL BUTT-FUSION JOINTS.
5) ALL NON-PRESSURIZED SEWER AND GREY WATER LINES ARE TO BE SLOPED AT S=0.01 M/M UNLESS OTHERWISE NOTED.
6) EXISTING STRUCTURES AND TEMPORARY CONSTRUCTION BUILDINGS THAT INTERFERE WITH UTILITIES ARE TO REMOVED AND DISPOSED.
7) THE WATER, GREY WATER, SEWER, AND ELECTRICAL CONNECTIONS SHOWN AT THE BUILDING WALL EXIST. THE CONTRACTOR IS TO VERIFY THE TYPE OF PIPE MATERIAL AND SIZE, AND DETERMINE THE FITTINGS AND CONNECTIONS NECESSARY TO CONNECT TO THESE EXISTING STUB-OUTS.

WATER & SEWER UTILITY PLAN

SCALE 1:150

UNLESS OTHERWISE NOTED, LINEAR DIMENSIONS SHOWN ARE IN MILLIMETERS.

5 0 5 10
1:150
NOTE: A3 SIZE REDUCED TO HALF SCALE.

BID DOCUMENT SUBMITTAL

SYMB	SUBMITTAL/REVISION DESCRIPTION	DATE	APR
B	BID DOCUMENT SUBMITTAL	09/26/10	BRG
A	95% DESIGN SUBMITTAL	08/19/10	BRG

This project was made possible by the United States Agency for International Development and the generous support of the American People through USAID Global Architecture and Engineering IQC Contracts.

DESIGNED BY: JLH
DATE: 09-26-10
DRAWN BY: ARC
SUBMITTED BY: TETRA TECH
CHECKED BY: KWC
CAD FILE NAME: WOLT06-U-10

USAID FROM THE AMERICAN PEOPLE

A E S P

USAID – OIEE
SARDAR GIRLS HIGH SCHOOL
KABUL, AFGHANISTAN

WATER & SEWER UTILITY PLAN
SHEET 1 OF 5

SHEET REFERENCE NUMBER:
LT0006
U-10

Z:\127-1298-10001\Work Orders\WO-LT\WO-LT-0006 SGHS Utility Design\CAD\Conceptual\Civil\WOLT06-U-10.dwg 9/23/2010 2:45:00 PM Koethe, Eric

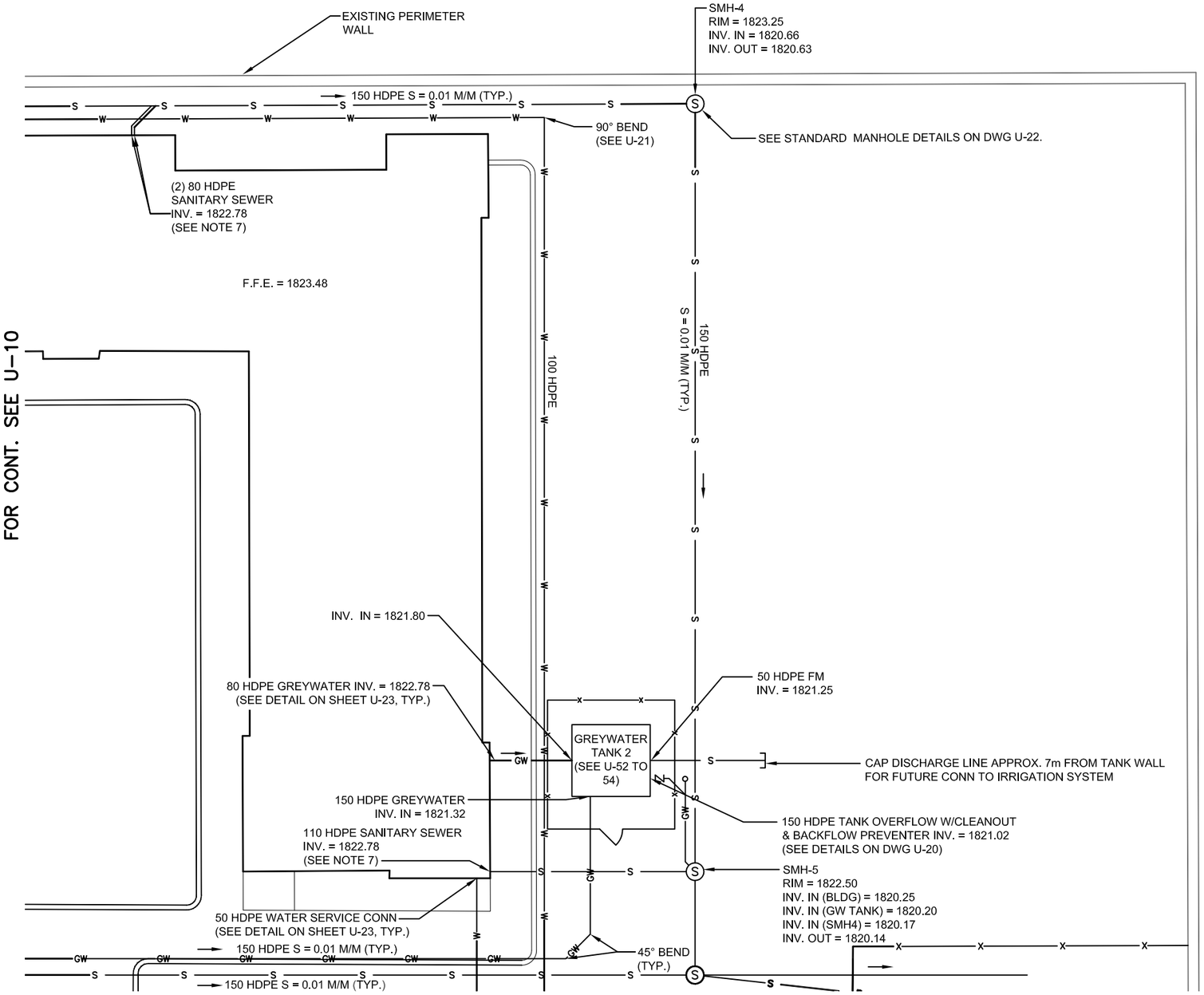

WATER & SEWER UTILITY PLAN

SCALE 1:150

NOTES:

1) ALL ABOVE GROUND PIPES, FITTINGS, AND VALVES SHALL BE PAINTED CPVC OR STEEL PIPE UNLESS OTHERWISE NOTED. SEE SPECIFICATION 09 90 00 FOR FURTHER DETAILS.
2) ALL PRESSURIZED HDPE WATER, SEWER, AND GREY WATER LINES ARE TO BE SMOOTH WALL PIPE (SDR=17 FOR 50mm AND UP, SDR 7.4 FOR 25mm) JOINED USING THERMAL BUTT FUSION WELDING METHODS.
3) ALL NON-PRESSURIZED HDPE SEWER AND GREY WATER LINES FOR 150mm AND UP ARE TO BE CORRUGATED WALL PIPE WITH A RING STIFFNESS OF 16 kN/M^2, JOINED USING ELECTROFUSION WELDING OR EXTRUSION WELDING METHODS.
4) ALL NON-PRESSURIZED HDPE SEWER AND GREY WATER LINES LESS THAN 150mm ARE TO BE SMOOTH WALL PIPE, SDR=17 WITH THERMAL BUTT-FUSION JOINTS.
5) ALL NON-PRESSURIZED SEWER AND GREY WATER LINES ARE TO BE SLOPED AT S=0.01 M/M UNLESS OTHERWISE NOTED.
6) EXISTING STRUCTURES AND TEMPORARY CONSTRUCTION BUILDINGS THAT INTERFERE WITH UTILITIES ARE TO REMOVED AND DISPOSED.
7) THE WATER, GREY WATER, SEWER, AND ELECTRICAL CONNECTIONS SHOWN AT THE BUILDING WALL EXIST. THE CONTRACTOR IS TO VERIFY THE TYPE OF PIPE MATERIAL AND SIZE, AND DETERMINE THE FITTINGS AND CONNECTIONS NECESSARY TO CONNECT TO THESE EXISTING STUB-OUTS.

UNLESS OTHERWISE NOTED, LINEAR DIMENSIONS SHOWN ARE IN MILLIMETERS.

5 0 5 10
1:150
NOTE: A3 SIZE REDUCED TO HALF SCALE.

BID DOCUMENT SUBMITTAL

SYMB	SUBMITTAL/REVISION DESCRIPTION	DATE	APR
B	BID DOCUMENT SUBMITTAL	09/26/10	BRG
A	95% DESIGN SUBMITTAL	08/19/10	BRG

This project was made possible by the United States Agency for International Development and the generous support of the American People through USAID Global Architecture and Engineering IQC Contracts.

DESIGNED BY: JLH
DATE: 09-26-10
DRAWN BY: ARC
SUBMITTED BY: TETRA TECH
CHECKED BY: KWC
CAD FILE NAME: WOLT06-U-11

USAID FROM THE AMERICAN PEOPLE

A E S P

USAID – OIEE
SARDAR GIRLS HIGH SCHOOL
KABUL, AFGHANISTAN

WATER & SEWER UTILITY PLAN
SHEET 2 OF 5

SHEET REFERENCE NUMBER:
LT0006
U-11

Z:\127-1298-10001\Work Orders\WO-LT\WO-LT-0006 SGHS Utility Design\CAD\Conceptual\Civil\WOLT06-U-11.dwg 9/23/2010 3:17:21 PM Koethe, Eric

FOR CONT. SEE U-10

100 GATE VALVE (SEE SHEET U-20)

100 HDPE

45° BEND (TYP.) (SEE U-21)

90° BEND (SEE U-21)

EXISTING PERIMETER WALL

50 GATE VALVE (SEE SHEET U-20)

REDUCER (150x100)

150x150x50 TEE (SEE SHEET U-21)

100x100x50 TEE

150 HDPE

SMH-8
RIM = 1823.00
INV. IN (SMH-6) = 1821.67
INV. IN (SMH-7) = 1821.70
INV. OUT = 1821.64
(SEE STANDARD MANHOLE DETAILS ON DWG U-22)

50 HDPE

150 HDPE
S=0.01 M/M (TYP.)

EXISTING TUBE WELL (TO REMAIN)

EXISTING LATRINE (TO REMAIN)

SMH-6
RIM = 1823.04
INV. IN = 1822.06
INV. OUT = 1822.03

S=0.01 M/M

110 HDPE
SANITARY SEWER
INV. = 1822.10
(ESTIMATED, CONTRACTOR TO VERIFY)

EXISTING WATER TANK (TO REMAIN)

50 GATE VALVE (SEE SHEET U-20)

50 HDPE WATER SERVICE CONN

TRANSFORMER

EXISTING GUARDHOUSE (TO REMAIN)

FOR CONT. SEE U-13

2+10 2+20 2+

0+00
2+00

AREA NOT SURVEYED (TYP.)

WWTP EFFLUENT PIPE, 100 HDPE, INSTALLED IN EXISTING DRAINAGE TRENCH (SEE NOTE 7 ON DWG U-13)

EXISTING DRAINAGE TRENCH

0+10

U-12 U-12
1

FOR CONT. SEE U-14

EXISTING FENCES

EXISTING SIDEWALK

500

100 (TYP.)

400

WWTP EFFLUENT LINE 100 HDPE

EXISTING DRAINAGE TRENCH

SECTION A
NOT TO SCALE U-14,U-12 U-12

NOTES:

1) ALL ABOVE GROUND PIPES, FITTINGS, AND VALVES SHALL BE PAINTED CPVC OR STEEL PIPE UNLESS OTHERWISE NOTED.
2) ALL PRESSURIZED HDPE WATER, SEWER, AND GREY WATER LINES ARE TO BE SMOOTH WALL PIPE (SDR=17 FOR 50mm AND UP, SDR 7.4 FOR 25mm) JOINED USING THERMAL BUTT FUSION WELDING METHODS.
3) ALL NON-PRESSURIZED HDPE SEWER AND GREY WATER LINES FOR 150mm AND UP ARE TO BE CORRUGATED WALL PIPE WITH A RING STIFFNESS OF 16 kN/M², JOINED USING ELECTROFUSION WELDING OR EXTRUSION WELDING METHODS.
4) ALL NON-PRESSURIZED HDPE SEWER AND GREY WATER LINES LESS THAN 150mm ARE TO BE SMOOTH WALL PIPE, SDR=17 WITH THERMAL BUTT-FUSION JOINTS.
5) ALL NON-PRESSURIZED SEWER AND GREY WATER LINES ARE TO BE SLOPED AT S=0.01 M/M UNLESS OTHERWISE NOTED.
6) EXISTING STRUCTURES AND TEMPORARY CONSTRUCTION BUILDINGS THAT INTERFERE WITH UTILITIES ARE TO REMOVED AND DISPOSED.

WATER & SEWER UTILITY PLAN
SCALE 1:150

UNLESS OTHERWISE NOTED, LINEAR DIMENSIONS SHOWN ARE IN MILLIMETERS.

5 0 5 10
1:150
NOTE: A3 SIZE REDUCED TO HALF SCALE.

BID DOCUMENT SUBMITTAL

SYMB	SUBMITTAL/REVISION DESCRIPTION	DATE	APR
B	BID DOCUMENT SUBMITTAL	09/26/10	BRG
A	95% DESIGN SUBMITTAL	08/19/10	BRG

This project was made possible by the United States Agency for International Development and the generous support of the American People through USAID Global Architecture and Engineering IQC Contracts.

DESIGNED BY: JLH
DRAWN BY: ARC
CHECKED BY: KWC
DATE: 09-26-10
SUBMITTED BY: TETRA TECH
CAD FILE NAME: WOLT06-U-12

USAID FROM THE AMERICAN PEOPLE

A E S P

USAID – OIEE
SARDAR GIRLS HIGH SCHOOL
KABUL, AFGHANISTAN

WATER & SEWER UTILITY PLAN
SHEET 3 OF 5

SHEET REFERENCE NUMBER:
LT0006
U-12

Z:\127-1298-10001\Work Orders\WO-LT\WO-LT-0006 SGHS Utility Design\CAD\Conceptual\Civil\WOLT06-U-12.dwg 9/23/2010 3:07:15 PM Koethe, Eric

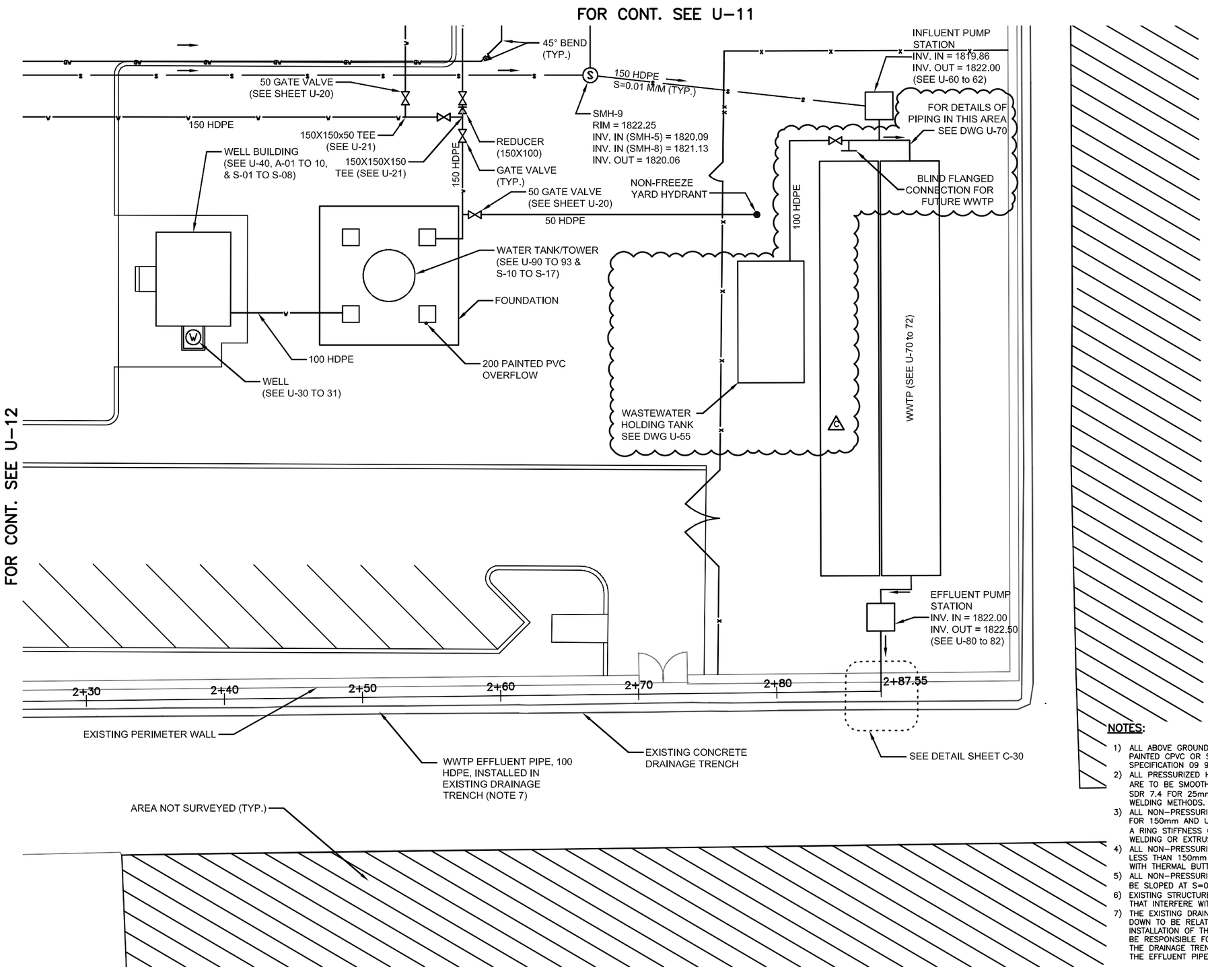

WATER & SEWER UTILITY PLAN

SCALE 1:150

UNLESS OTHERWISE NOTED, LINEAR DIMENSIONS SHOWN ARE IN MILLIMETERS.

5 0 5 10
1:150
NOTE: A3 SIZE REDUCED TO HALF SCALE.

NOTES:

1) ALL ABOVE GROUND PIPES, FITTINGS, AND VALVES SHALL BE PAINTED CPVC OR STEEL PIPE UNLESS OTHERWISE NOTED. SEE SPECIFICATION 09 90 00 FOR FURTHER DETAILS.
2) ALL PRESSURIZED HDPE WATER, SEWER, AND GREY WATER LINES ARE TO BE SMOOTH WALL PIPE (SDR=17 FOR 50mm AND UP, SDR 7.4 FOR 25mm) JOINED USING THERMAL BUTT FUSION WELDING METHODS.
3) ALL NON-PRESSURIZED HDPE SEWER AND GREY WATER LINES FOR 150mm AND UP ARE TO BE CORRUGATED WALL PIPE WITH A RING STIFFNESS OF 16 kN/M², JOINED USING ELECTROFUSION WELDING OR EXTRUSION WELDING METHODS.
4) ALL NON-PRESSURIZED HDPE SEWER AND GREY WATER LINES LESS THAN 150mm ARE TO BE SMOOTH WALL PIPE, SDR=17 WITH THERMAL BUTT-FUSION JOINTS.
5) ALL NON-PRESSURIZED SEWER AND GREY WATER LINES ARE TO BE SLOPED AT S=0.01 M/M UNLESS OTHERWISE NOTED.
6) EXISTING STRUCTURES AND TEMPORARY CONSTRUCTION BUILDINGS THAT INTERFERE WITH UTILITIES ARE TO REMOVED AND DISPOSED.
7) THE EXISTING DRAINAGE TRENCH IS TO BE DRAINED AND HOSED DOWN TO BE RELATIVE CLEAN AND EMPTY DURING THE INSTALLATION OF THE EFFLUENT PIPE. THE CONTRACTOR IS TO BE RESPONSIBLE FOR PUMPING, HAULING, AND DISPOSING OF THE DRAINAGE TRENCH CONTENTS DURING THE INSTALLATION OF THE EFFLUENT PIPE.

BID DOCUMENT SUBMITTAL

SYMB	SUBMITTAL/REVISION DESCRIPTION	DATE	APR
C	ADDED WASTEWATER HOLDING TANK	12/09/10	BRG
B	BID DOCUMENT SUBMITTAL	09/26/10	BRG
A	95% DESIGN SUBMITTAL	08/19/10	BRG

This project was made possible by the United States Agency for International Development and the generous support of the American People through USAID Global Architecture and Engineering IQC Contracts.

DESIGNED BY: JLH
DATE: 12-09-10
DRAWN BY: ARC
SUBMITTED BY: TETRA TECH
CHECKED BY: KWC
CAD FILE NAME: WOLT06-U-13

USAID FROM THE AMERICAN PEOPLE

A E S P

USAID – OIEE
SARDAR GIRLS HIGH SCHOOL
KABUL, AFGHANISTAN
WATER & SEWER UTILITY PLAN
SHEET 4 OF 5

SHEET REFERENCE NUMBER:
LT0006
U-13

P:\1298\Work Orders\WO-LT\WO-LT-0006 SGHS Utility Design\CAD\Conceptual\Civil\WOLT06-U-13.dwg 12/12/2010 9:32:57 AM Fazelpoor, Behroz

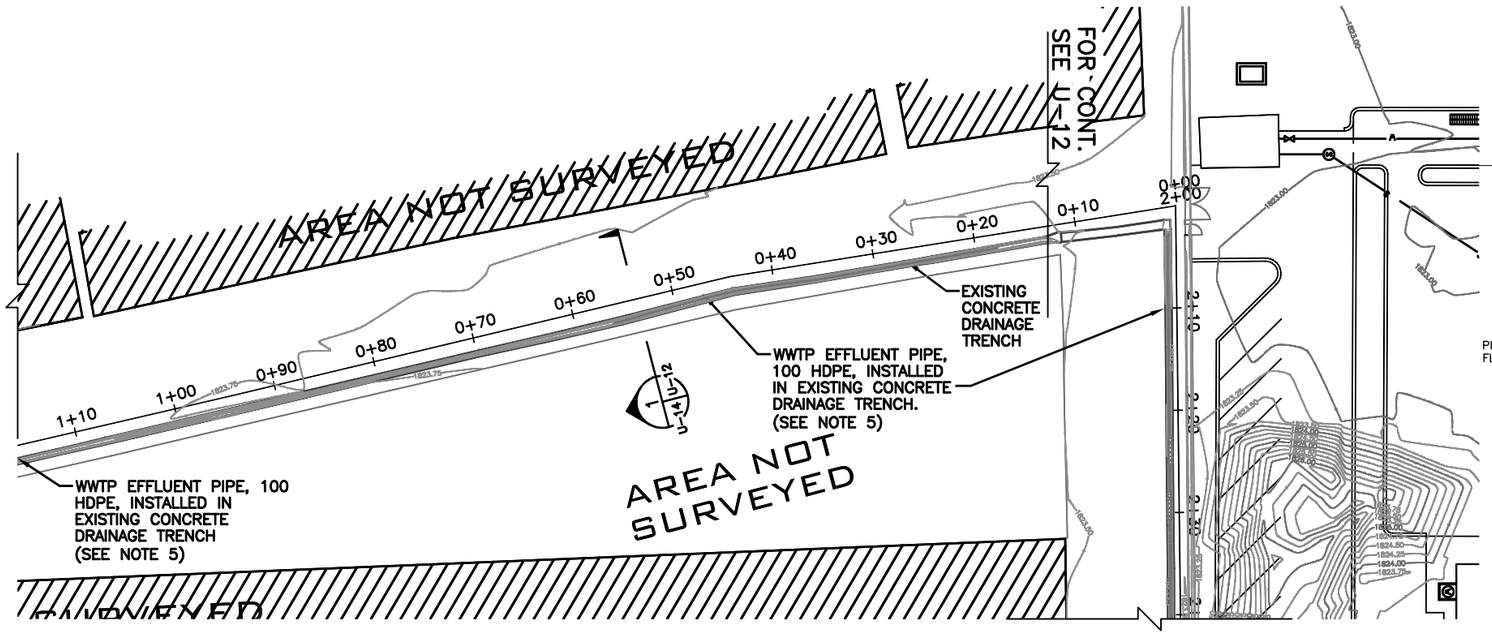

PLAN VIEW A
SCALE 1:300

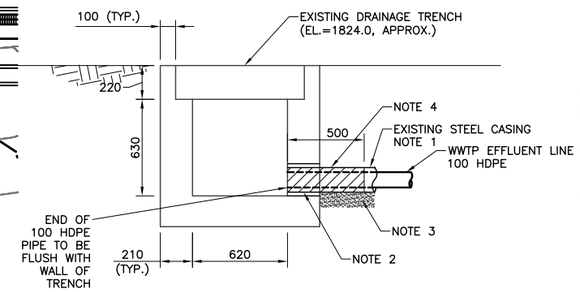

WEST END

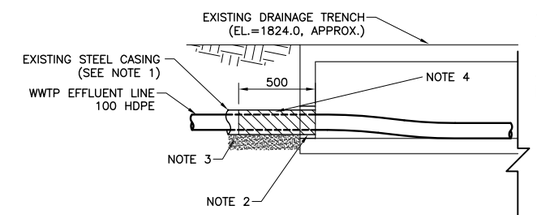

EAST END

DARUL AMAN ROAD CROSSING
1:20

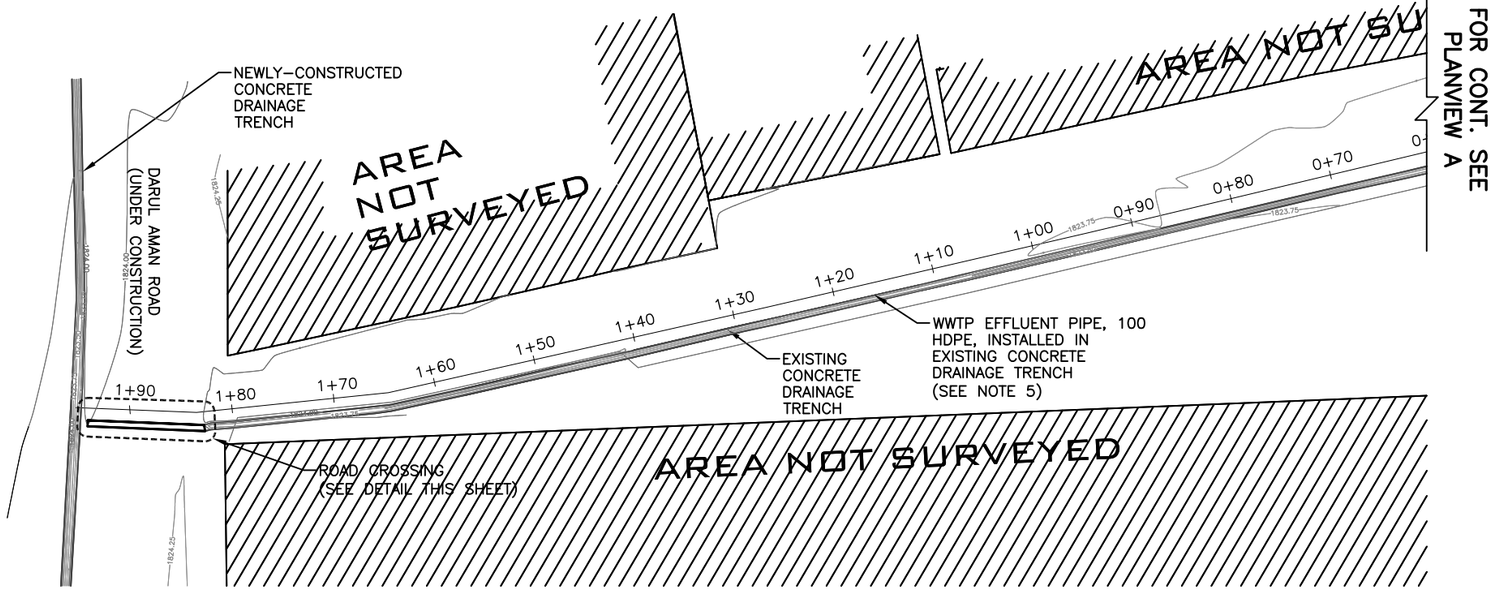

PLAN VIEW B
SCALE 1:300

NOTES

1. EXISTING GALVANIZED STEEL CASING, MIN. ID=150, MIN WALL THICKNESS = 7mm.
2. THE EXISTING STEEL CASING PENETRATES THE WALLS OF THE EXISTING DRAINAGE TRENCHES ON BOTH SIDES OF DARAL AMAN ROAD. CONFIRM THAT THE ANNULAR SPACE BETWEEN CASING AND TRENCH WALL HAS BEEN FILLED WITH NON-SHRINK GROUT.
3. THE EXISTING STEEL CASING IS BEDDED ON A LEAN CONCRETE MIX.
4. AFTER INSTALLATION AND TESTING OF THE 100 HDPE IN THE CASING PIPE, FILL THE ANNULAR SPACE BETWEEN THE CASING PIPE AND THE CARRIER PIPE WITH NON-SHRINK GROUT FOR A DISTANCE OF 500 FROM THE OPENING INTO THE TRENCH.
5. THE EXISTING DRAINAGE TRENCH IS TO BE DRAINED AND HOSED DOWN TO BE RELATIVE CLEAN AND EMPTY DURING THE INSTALLATION OF THE EFFLUENT PIPE. THE CONTRACTOR IS TO BE RESPONSIBLE FOR PUMPING, HAULING, AND DISPOSING OF THE DRAINAGE TRENCH CONTENTS DURING THE INSTALLATION OF THE EFFLUENT PIPE.

10 5 0 5 10 20
1:300
1 .50 0 1
1:20
NOTE: A3 SIZE REDUCED TO HALF SCALE.

UNLESS OTHERWISE NOTED, LINEAR DIMENSIONS SHOWN ARE IN MILLIMETERS.

BID DOCUMENT SUBMITTAL

SYMB	SUBMITTAL/REVISION DESCRIPTION	DATE	APR
B	BID DOCUMENT SUBMITTAL	09/26/10	BRG
A	95% DESIGN SUBMITTAL	08/19/10	BRG

This project was made possible by the United States Agency for International Development and the generous support of the American People through USAID Global Architecture and Engineering IQC Contracts.

DESIGNED BY: JLH
DATE: 09-26-10
DRAWN BY: ARC
SUBMITTED BY: TETRA TECH
CHECKED BY: KWC
CAD FILE NAME: WOLT06-U-14

USAID FROM THE AMERICAN PEOPLE

A E S P

USAID – OIEE
SARDAR GIRLS HIGH SCHOOL
KABUL, AFGHANISTAN
WATER & SEWER UTILITY PLAN
SHEET 5 OF 5

SHEET REFERENCE NUMBER:
LT0006
U-14

Z:\127-1298-10001\Work Orders\WO-LT\WO-LT-0006 SGHS Utility Design\CAD\Conceptual\Civil\WOLT06-U-14.dwg 9/23/2010 3:27:28 PM Koethe, Eric

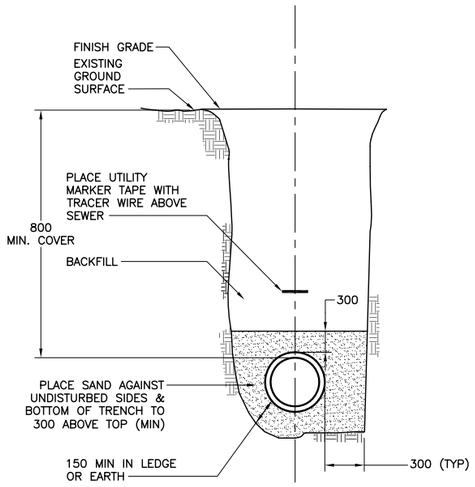

HDPE SEWER TRENCH DETAIL
N.T.S.

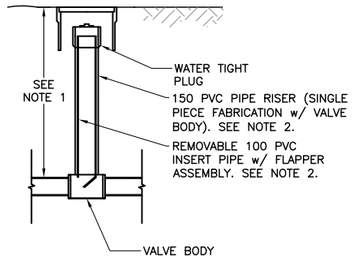

BACKFLOW PREVENTION DEVICE
N.T.S.

NOTES:

1. SEWER LINE DEPTH SHALL BE AS NEEDED TO MATCH PIPE INVERT ELEVATION.
2. THE BACKFLOW PREVENTION DEVICE (RISER PIPE, VALVE BODY AND THE INSERT PIPE WITH FLAPPER ASSEMBLY) SHALL BE MANUFACTURED BY CLEAN CHECK INC. OR APPROVED EQUAL.
3. BACKFLOW PREVENTION DEVICE TO BE LOCATED AS SHOWN FOR THE OVERFLOW LINES OF THE GREY WATER TANKS. SEE DWGS. U–10 AND U–11.

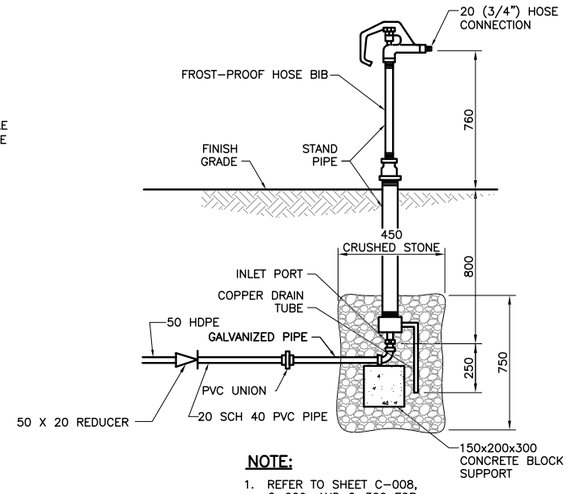

NOTE:

1. REFER TO SHEET C–008, C–009, AND C–300 FOR INSTALLATION LOCATIONS
2. TWO BOLLARDS REQUIRED AT EACH INSTALLATION EXCEPT AT WASTEWATER DUMPING PADS.

FROST–PROOF YARD HYDRANT
N.T.S.

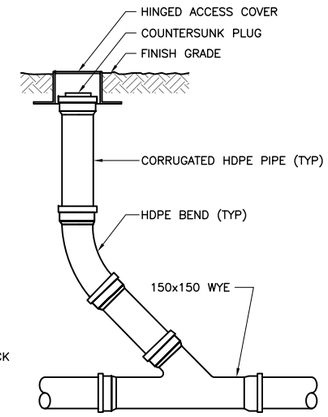

IN–LINE

SANITARY CLEANOUT TO GRADE
N.T.S.

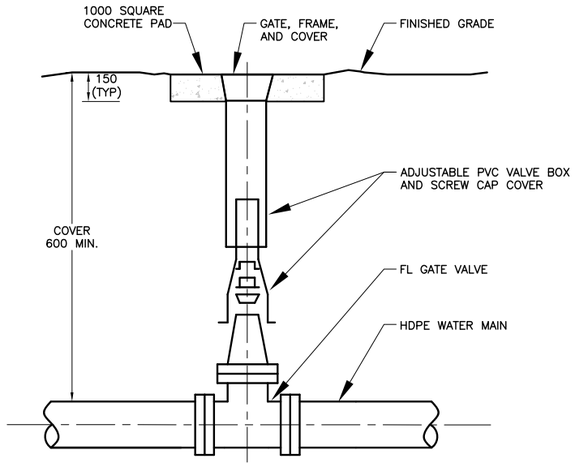

BURIED GATE VALVE
N.T.S.

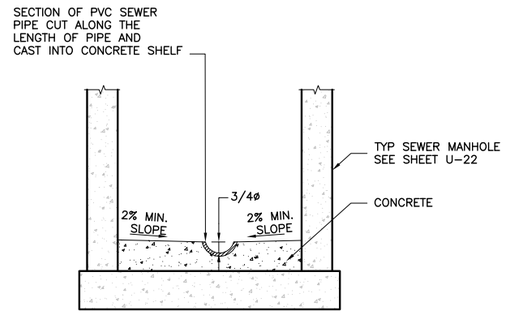

SEWER MANHOLE INVERT
N.T.S.

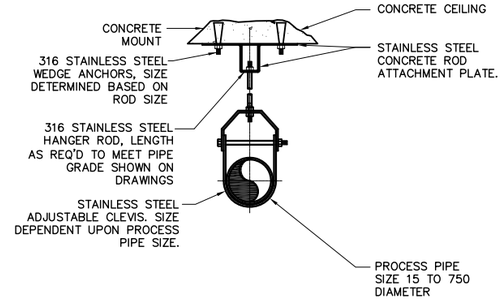

PIPE HANGER SUPPORT – CLEVIS AND PLATE
N.T.S.

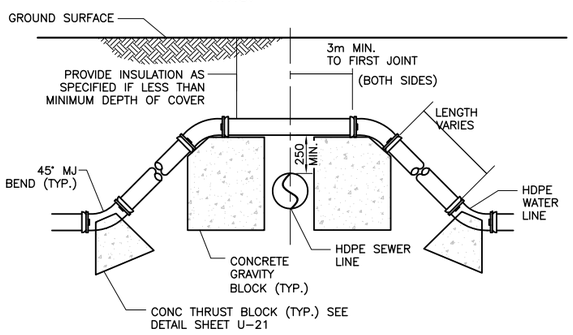

WATER MAIN SEWER CROSSING DETAIL
N.T.S.

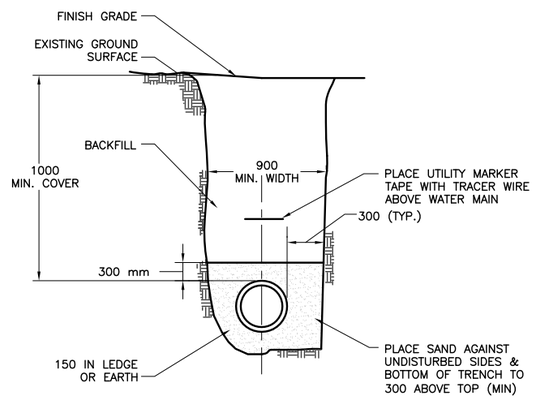

HDPE WATER MAIN TRENCH
N.T.S.

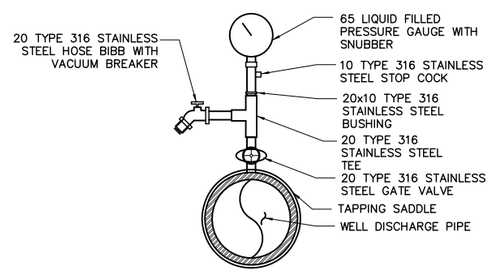

PRESSURE GUAGE WITH HOSE BIB
N.T.S.

UNLESS OTHERWISE NOTED, LINEAR DIMENSIONS SHOWN ARE IN MILLIMETERS.

NOTE: A3 SIZE REDUCED TO HALF SCALE.

BID DOCUMENT SUBMITTAL

SYMB	SUBMITTAL/REVISION DESCRIPTION	DATE	APR
B	BID DOCUMENT SUBMITTAL	09/26/10	BRG
A	95% DESIGN SUBMITTAL	08/19/10	BRG

This project was made possible by the United States Agency for International Development and the generous support of the American People through USAID Global Architecture and Engineering IQC Contracts.

DESIGNED BY: JLH
DATE: 09–26–10
DRAWN BY: ARC
SUBMITTED BY: TETRA TECH
CHECKED BY: KWC
CAD FILE NAME: WOLT06–U–20

USAID FROM THE AMERICAN PEOPLE

A E S P

USAID – OIEE
SARDAR GIRLS HIGH SCHOOL
KABUL, AFGHANISTAN

WATER & SEWER DETAILS
SHEET 1 OF 4

SHEET REFERENCE NUMBER:
LT0006
U–20

Z:\127–1298–10001\Work Orders\WO–LT\WO–LT–0006 SGHS Utility Design\CAD\Conceptual\Civil\WOLT06–U–20.dwg 9/25/2010 4:35:35 PM Koethe, Eric

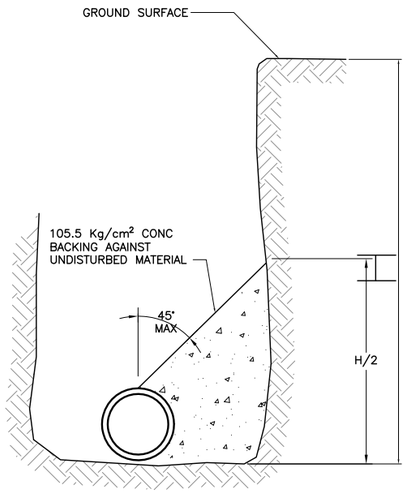

CONCRETE THRUST BLOCK DETAIL
N.T.S.

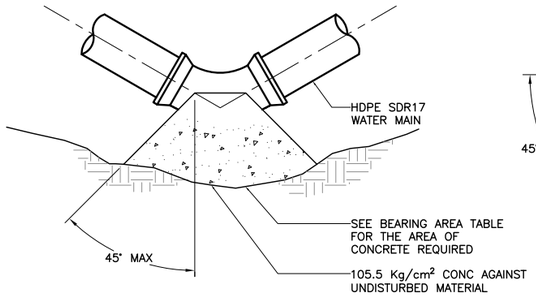

PLAN OF THRUST BLOCK AT BEND
N.T.S.

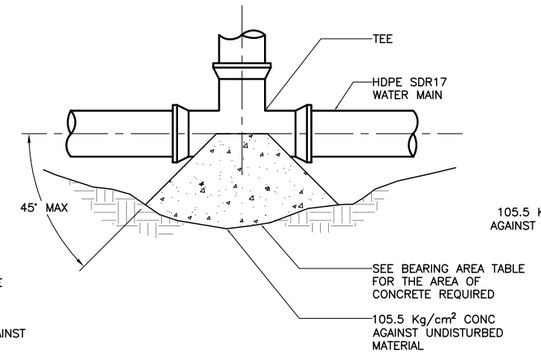

PLAN OF THRUST BLOCK AT TEE
N.T.S.

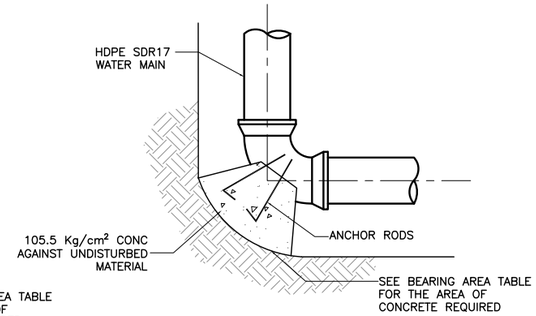

PLAN OR THRUST BLOCK AT 90° VERTICAL BEND
N.T.S.

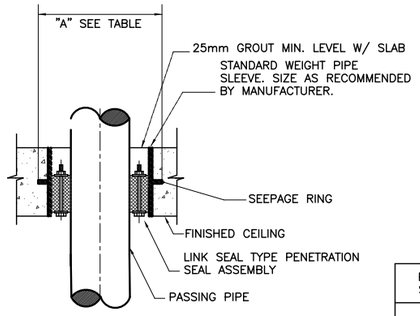

ROOF PIPE PENETRATION DETAIL
N.T.S.

PIPE SIZE	NOMINAL SLEEVE DIAMETER	"A"
50	100	150
65	100	200
80	150	200
100	150	250
150	250	350
200	300	400
250	350	450
300	400	500
350	450	550
400	500	600
450	600	650
500	600	700
600	750	800

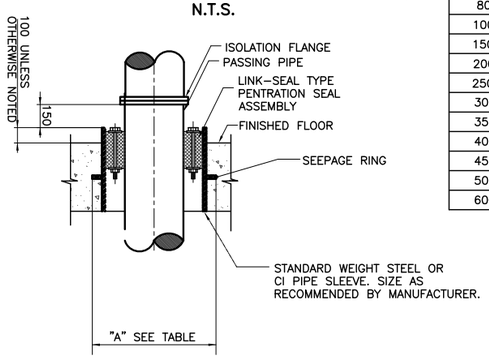

FLOOR PIPE PENETRATION DETAIL
N.T.S.

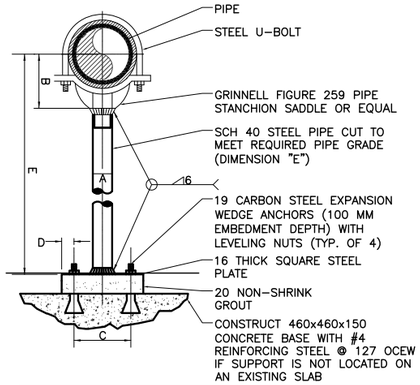

PIPE SIZE	A	B	C	D	E	
					MIN	MAX
100	80	105	120	40	150	1500
150	80	125	120	40	150	1500
200	100	175	120	40	200	1500
250	100	215	120	40	250	1500

PIPE SUPPORT – STANCHION SADDLE
N.T.S.

NOTE:

THIS DETAIL IS TO BE USED FOR INTERIOR BUILDING APPLICATIONS, AND WATER TANK VALVE SUPPORT.

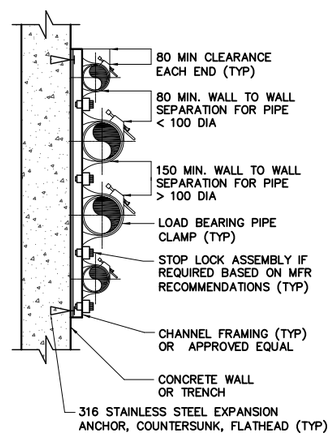

PIPE SUPPORT – STACKED (SMALL DIAMETER)
N.T.S.

ANCHOR ROD SCHEDULE FOR GRAVITY BLOCKS

PIPE SIZE	RODS	MINIMUM EMBEDMENT LENGTH
100	2 – #25	150
150	2 – #25	150
200	2 – #25	150

BEARING AREA FOR VARIOUS PIPE DIAMETERS

FITTING	25	50	75	100	150	200	250	300
1/32 BEND (286mm)	.093m²	.093m²	.093m²	.093m²	.093m²	.093m²	.186m²	.186m²
1/16 BEND (572mm)	.093m²	.093m²	.093m²	.093m²	.093m²	.186m²	.279m²	.372m²
1/8 BEND (45°)	.093m²	.093m²	.093m²	.093m²	.186m²	.279m²	.465m²	.651m²
1/4 BEND (90°)	.093m²	.093m²	.093m²	.186m²	.279m²	.558m²	.837m²	1.116m²
TEE/PLUG	.093m²	.093m²	.093m²	.093m²	.279m²	.372m²	.558m²	.837m²

NOTES:

1. ALL ELBOWS, BENDS, AND CAPS SHALL BE BRACED WITH CONCRETE THRUST BLOCKS. JOINTS SHALL NOT BE ENCASED IN CONCRETE.
2. SEE DRAWINGS FOR TYPE, SIZE AND QUANTITY OF SUPPORTED PIPES.
2. ALL FRAMING AND PIPE SUPPORT MATERIALS SHALL BE EITHER FRP (INTERIOR ONLY) OR 316 SST (UNISTRUT OR EQUAL FOR EXTERIOR).
3. BEARING AREA IS AREA OF CONCRETE IN CONTACT WITH WALL OF TRENCH (H X L).
4. HEIGHT AND LENGTH AS REQUIRED TO OBTAIN BEARING AREA SHOWN IN THE TABLE W/ H APPROX. 1/2 L.
5. THRUST BLOCK SIZING BASED ON 10.5 Kg/cm² WATER PRESSURE AND 211 Kg/cm² SOIL BEARING CAPACITY.
6. PROVIDE FLEXIBLE EXPANSION FITTING TO ACCOMMODATE APPROXIMATELY 38MM TO 50MM OF SETTLEMENT. FITTING TO BE RESISTANT TO UV EXPOSURE AND COMPLY WITH PIPE TESTING REQUIREMENTS AS STATED IN SPECIFICATIONS.

UNLESS OTHERWISE NOTED, LINEAR DIMENSIONS SHOWN ARE IN MILLIMETERS.

NOTE: A3 SIZE REDUCED TO HALF SCALE.

BID DOCUMENT SUBMITTAL

SYMB	SUBMITTAL/REVISION DESCRIPTION	DATE	APR
B	BID DOCUMENT SUBMITTAL	09/26/10	BRG
A	95% DESIGN SUBMITTAL	08/19/10	BRG

This project was made possible by the United States Agency for International Development and the generous support of the American People through USAID Global Architecture and Engineering IQC Contracts.

DESIGNED BY: JLH
DRAWN BY: ARC
CHECKED BY: KWC
DATE: 09-26-10
SUBMITTED BY: TETRA TECH
CAD FILE NAME: WOLT06-U-21

USAID FROM THE AMERICAN PEOPLE

A E S P

USAID – OIEE
SARDAR GIRLS HIGH SCHOOL
KABUL, AFGHANISTAN

WATER & SEWER DETAILS
SHEET 2 OF 4

SHEET REFERENCE NUMBER:
LT0006
U-21

Z:\127-1298-10001\Work Orders\WO-LT\WO-LT-0006 SGHS Utility Design\CAD\Conceptual\Civil\WOLT06-U-21.dwg 9/23/2010 4:28:30 PM Koethe, Eric

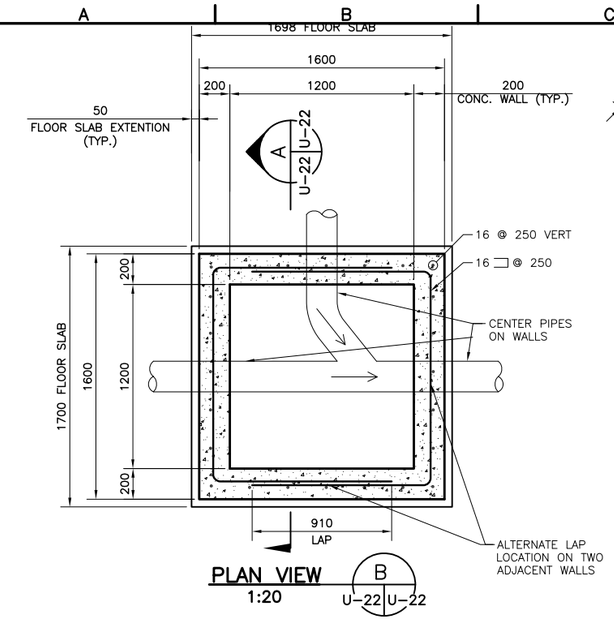

PLAN VIEW
1:20

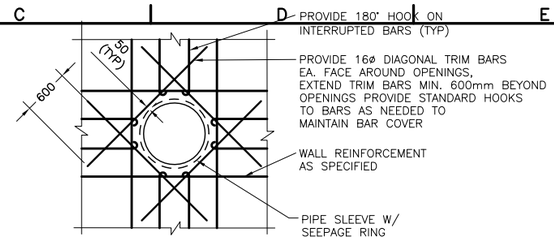

NOTE: PROVIDE ADDITIONAL REINFORCING EQUAL TO BARS INTERRUPTED, 1/2 EACH SIDE, ADDITIONAL BARS TO BE IN SAME PLANE.

REINFORCING AROUND WALL PENETRATION
N.T.S.

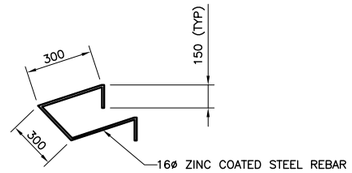

LADDER RUNG
NTS

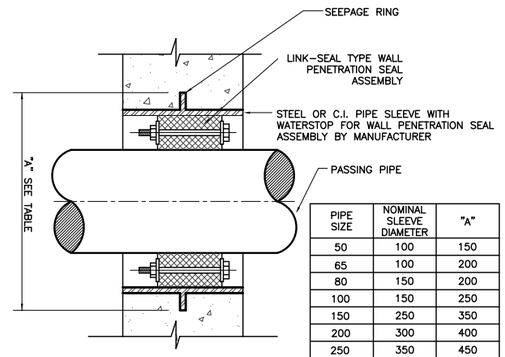

NOTE:

ALL DIMENSIONS ARE IN MILLIMETERS UNLESS OTHERWISE NOTED.

PIPE SIZE	NOMINAL SLEEVE DIAMETER	"A"
50	100	150
65	100	200
80	150	200
100	150	250
150	250	350
200	300	400
250	350	450
300	400	500
350	450	550
400	500	600
450	600	650
500	600	700
600	750	800

WALL PIPE PENETRATION DETAIL
N.T.S.

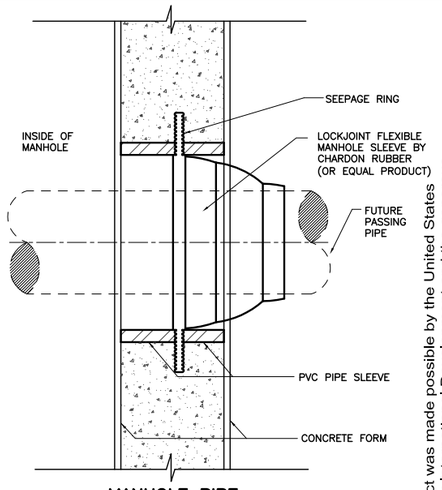

MANHOLE PIPE PENETRATION DETAIL
N.T.S.

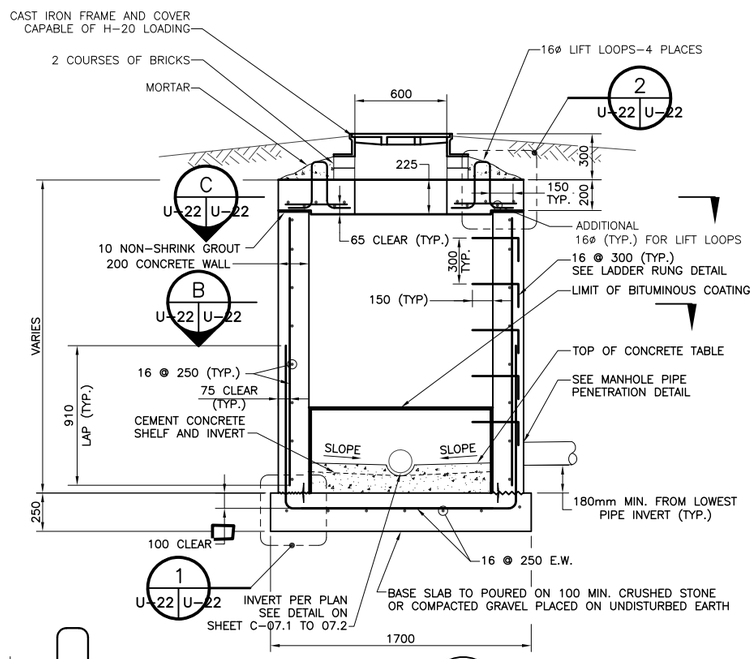

SECTION
1:20

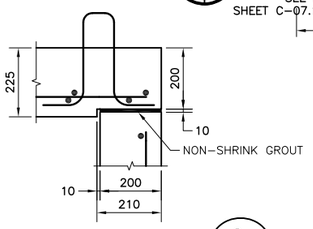

DETAIL
SCALE 1:10

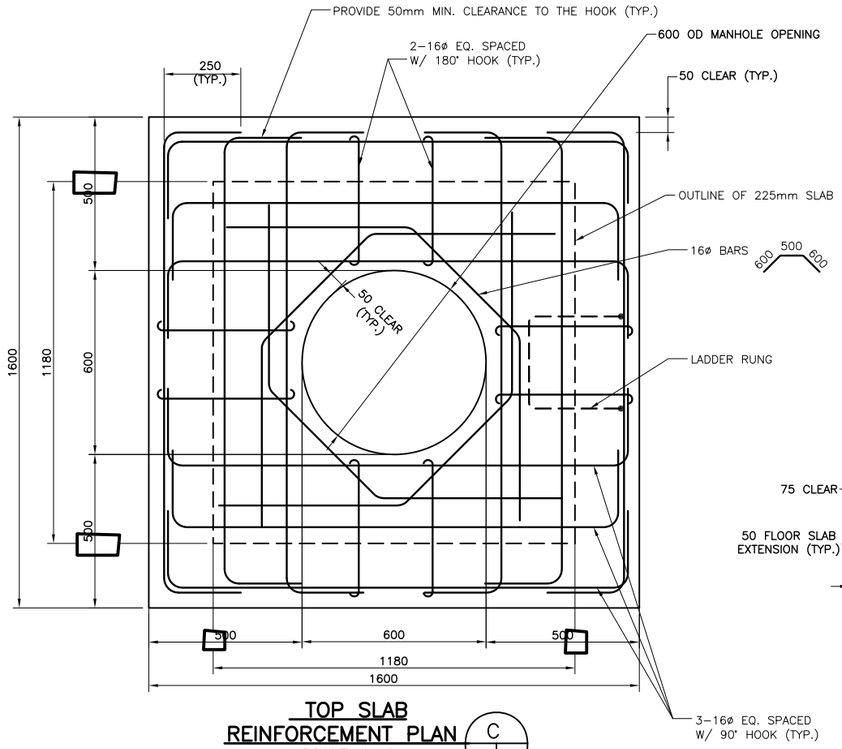

TOP SLAB REINFORCEMENT PLAN
SCALE 1:10

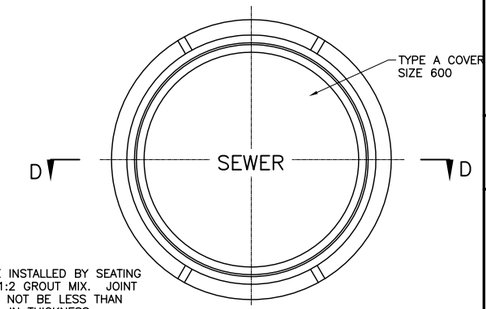

PLAN

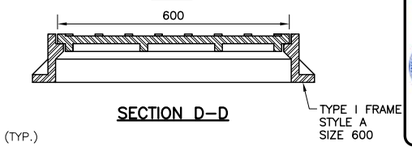

SECTION D-D

SEWER MANHOLE FRAME & COVER

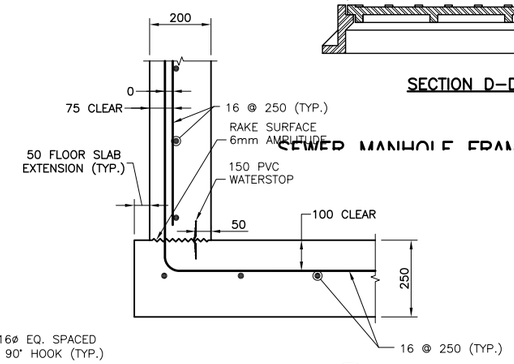

DETAIL
SCALE 1:10

TYPICAL SEWER MANHOLE DETAILS
(CAST-IN-PLACE)

NOTES:

1. PROVIDE 50mm CLEARANCE U.N.O. ON DWG.
2. STRUCTURAL CONCRETE SHALL BE NORMAL WEIGHT CONCRETE HAVING MINIMUM STRENGTH OF 210 Kg/cm2 (3000 PSI) AT 28 DAYS.

UNLESS OTHERWISE NOTED, LINEAR DIMENSIONS SHOWN ARE IN MILLIMETERS.

NOTE: A3 SIZE REDUCED TO HALF SCALE.

BID DOCUMENT SUBMITTAL

SYMB	SUBMITTAL/REVISION DESCRIPTION	DATE	APR
B	BID DOCUMENT SUBMITTAL	09/26/10	BRG
A	95% DESIGN SUBMITTAL	08/19/10	BRG

This project was made possible by the United States Agency for International Development and the generous support of the American People through USAID Global Architecture and Engineering IQC Contracts.

DESIGNED BY: JLH
DATE: 09-26-10
DRAWN BY: ARC
SUBMITTED BY: TETRA TECH
CHECKED BY: KWC
CAD FILE NAME: WOLT06-U-22

USAID FROM THE AMERICAN PEOPLE

A E S P

USAID – OIEE
SARDAR GIRLS HIGH SCHOOL
KABUL, AFGHANISTAN

WATER & SEWER DETAILS
SHEET 3 OF 4

SHEET REFERENCE NUMBER:
LT0006
U-22

Z:\127-1298-10001\Work Orders\WO-LT\WO-LT0006 SGHS Utility Design\CAD\Conceptual\Civil\WOLT06-U-22.dwg 9/23/2010 4:37:13 PM Koethe, Eric

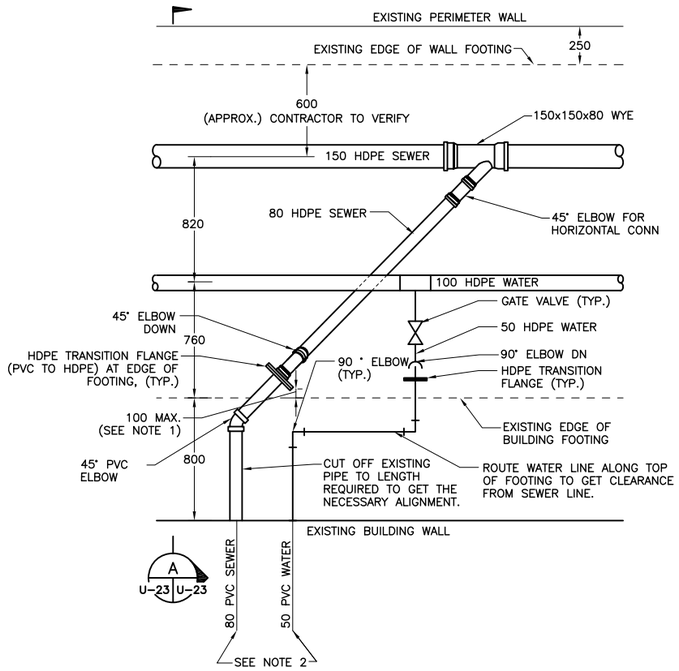

SEWER AND WATER CONNECTIONS EAST SIDE OF SARDAR SCHOOL

SCALE 1:20

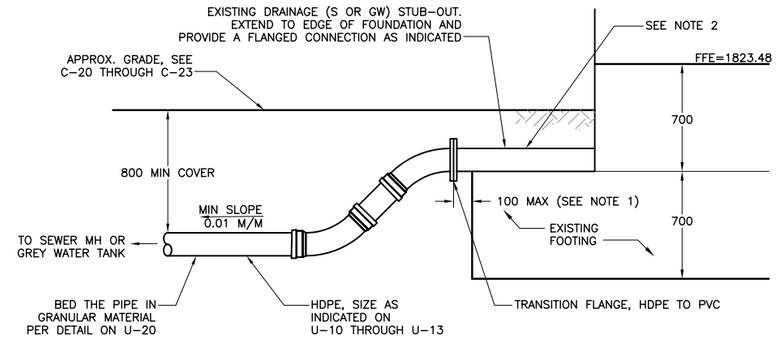

TYPICAL SEWER OR GREYWATER CONNECTION

SCALE 1:20

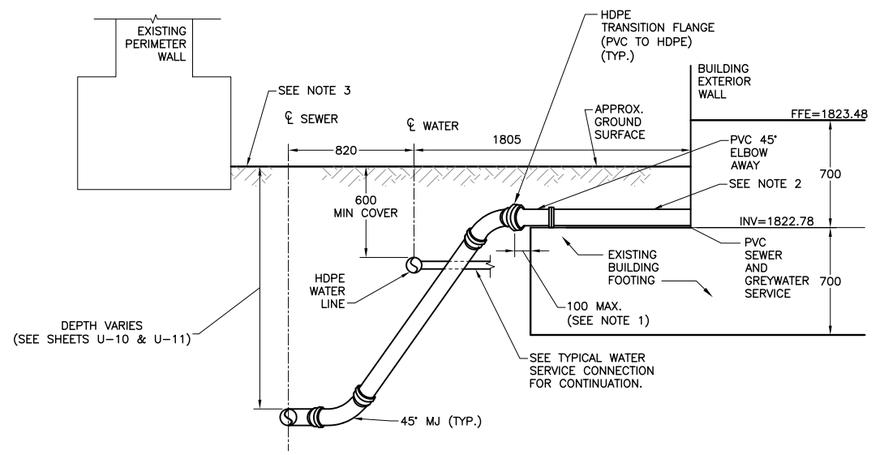

SEWER/GREYWATER CONNECTION WATER CROSSING DETAIL

SCALE 1:20

A
U-23 U-23

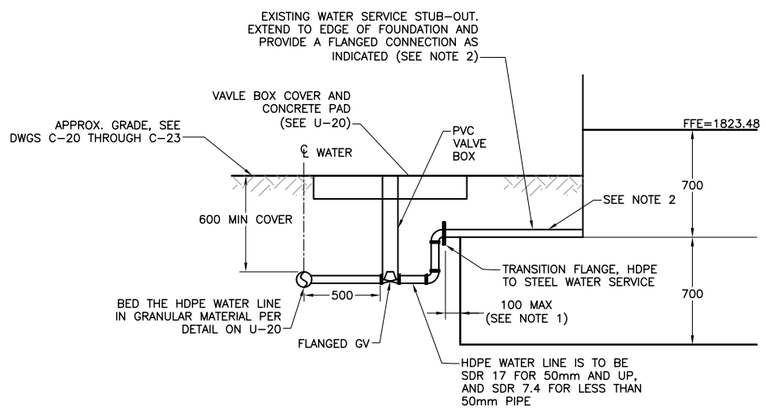

TYPICAL WATER SERVICE CONNECTION

SCALE 1:20

NOTES:

1. TRANSITION FLANGE IS TO BE AS CLOSE AS POSSIBLE TO THE EDGE OF THE FOOTING, TO MINIMIZE THE LENGTH OF SHALLOW PVC PIPE EXTENDING FROM THE FOOTING.
2. THE CONTRACTOR IS TO VERIFY THE TYPE OF PIPE MATERIAL AND SIZE, AND DETERMINE THE FITTINGS AND CONNECTIONS NECESSARY TO CONNECT TO THE EXISTING WATER AND SEWER STUB-OUTS FROM THE BUILDING.
3. THE CONTRACTOR IS TO DESIGN AND INSTALL SHORING TO ALLOW THE INSTALLATION OF THE UTILITIES AS INDICATED ON THE EAST SIDE OF SARDAR SCHOOL WITHOUT CAUSING SETTLEMENT OR DAMAGE OF ANY KIND TO OCCUR TO THE EXISTING PERIMETER WALL OR SCHOOL STRUCTURE. SEE SPECIFICATION 31 00 00, EARTHWORK, FOR FURTHER DETAILS.

UNLESS OTHERWISE NOTED, LINEAR DIMENSIONS SHOWN ARE IN MILLIMETERS.

NOTE: A3 SIZE REDUCED TO HALF SCALE.

BID DOCUMENT SUBMITTAL

This project was made possible by the United States Agency for International Development and the generous support of the American People through USAID Global Architecture and Engineering IQC Contracts.

SYMB	SUBMITTAL/REVISION DESCRIPTION	DATE	APR
B	BID DOCUMENT SUBMITTAL	09/26/10	BRG
A	95% DESIGN SUBMITTAL	08/19/10	BRG

DESIGNED BY: JLH
DATE: 09-26-10
DRAWN BY: ARC
SUBMITTED BY: TETRA TECH
CHECKED BY: KWC
CAD FILE NAME: LT0006-U-23

USAID FROM THE AMERICAN PEOPLE

A E S P

USAID – OIEE
SARDAR GIRLS HIGH SCHOOL
KABUL, AFGHANISTAN

WATER & SEWER DETAILS
SHEET 4 OF 4

SHEET REFERENCE NUMBER:
LT0006 U-23

Z:\127-1298-10001\Work Orders\WO-LT\WO-LT-0006 SGHS Utility Design\CAD\Conceptual\Civil\LT0006-U-23.dwg 9/23/2010 4:25:10 PM Koethe, Eric

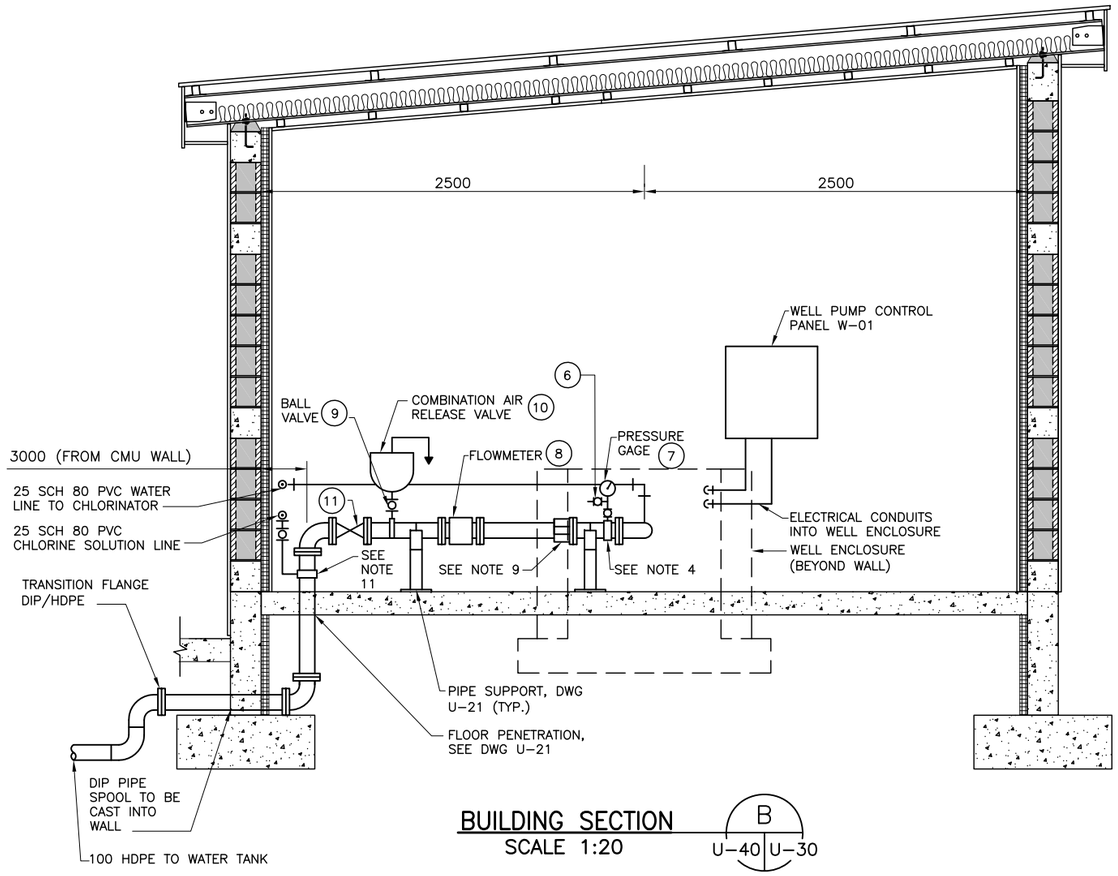

BUILDING SECTION
SCALE 1:20
B
U-40 | U-30

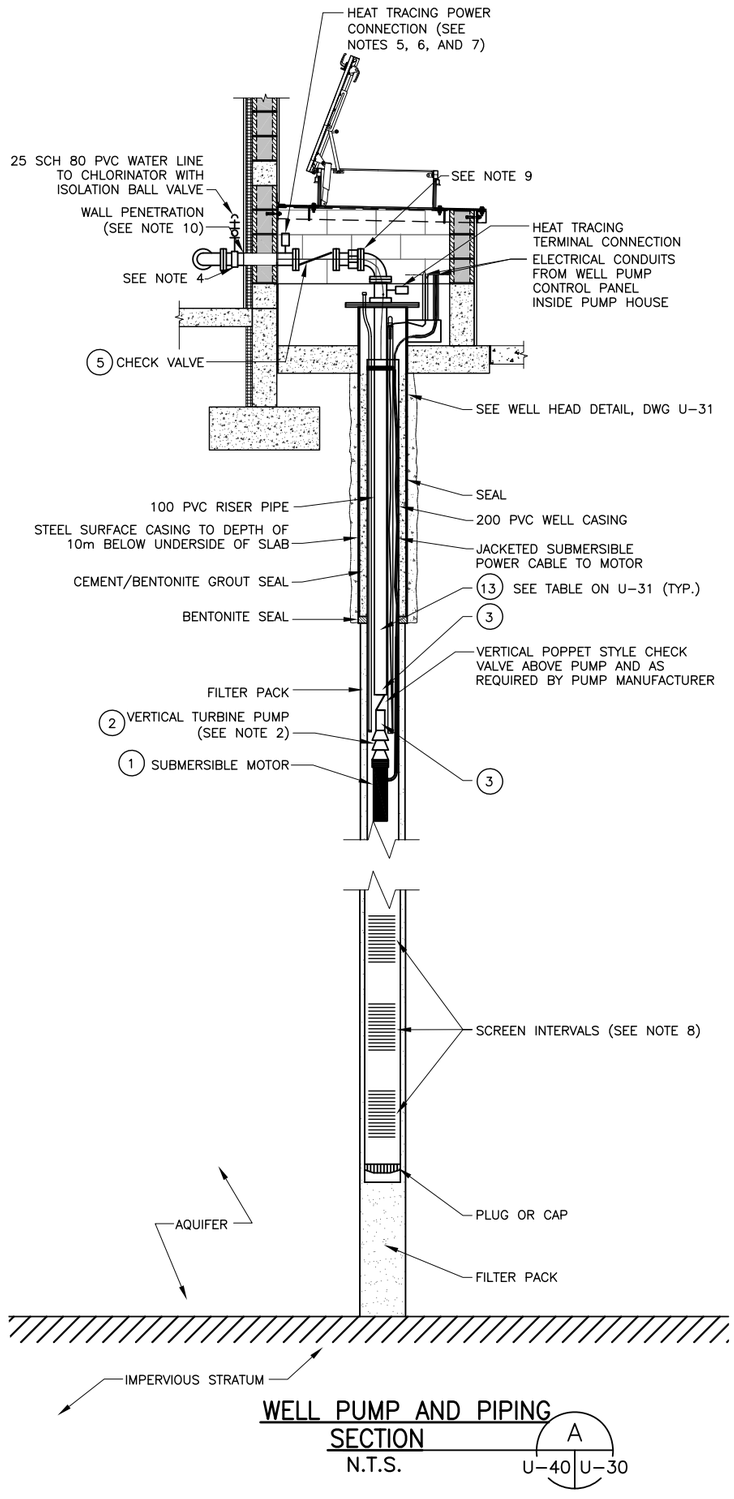

WELL PUMP AND PIPING SECTION
N.T.S.
A
U-40 | U-30

NOTES:

1. PIPE AND FITTINGS ABOVE GRADE ARE TO BE FLANGED DUCTILE IRON PIPE 100 I.D. (MINIMUM).
2. THE CAPACITY OF THE PUMP IS TO BE DETERMINED BY THE USAID IMPLEMENTING PARTNER AFTER THE STEP DRAW DOWN PUMP TEST. SEE SPECIFICATION 33 20 00.
3. ALL EXPOSED DUCTILE IRON PIPE AND STEEL SURFACES TO BE PROTECTED WITH PAINT. FINISH COAT TO BE BLUE.
4. ALL PIPE SHALL UTILIZE PIPE SADDLES. THE SADDLES SHALL BE STEEL UNO. SMITH-BLAIR OR EQUAL.
5. ALL ABOVE GROUND PIPES IN THE WELL ENCLOSURE TO BE INSULATED WITH FOAMED ELASTOMER (ASTM C534) OR ANY OTHER EQUIVALENT INSULATION MATERIAL. THE MINIMUM INSULATION THICKNESS SHALL BE 25mm.
6. ALL ABOVE GROUND PIPES AND VALVES IN THE WELL ENCLOSURE TO BE TRACED WITH SELF-REGULATING HEATING CABLE SYSTEM. HEAT TRACING CABLE SHALL BE TYCO 5XTV2 OR EQUAL WITH MINIMUM HEAT OUTPUT OF 12.5 WATT/M. ALUMINUM JACKET TO BE 0.6mm THICKNESS.
7. HEAT TRACING SYSTEM IN THE WELL ENCLOSURE SHALL BE INSTALLED PER MANUFACTURER'S RECOMMENDATION.
8. THE DEPTH POSITION OF THE SECTIONS OF WELL SCREEN IS TO BE DETERMINED BY THE USAID IMPLEMENTING PARTNER AFTER THE WELL LOG IS COMPLETED IN ACCORDANCE WITH THE SPECIFICATIONS.
9. DUCTILE IRON FLANGED COUPLING ADAPTERS (FCA) ARE TO BE PROVIDED WHERE SHOWN. FCA IS TO HAVE ANCHOR LUGS FOR THRUST RESTRAINT.
10. CORE DRILL THROUGH THE CMU WALL AND FILL ANNULAR SPACE WITH GROUT. APPLY INTERIOR INSULATION AND STUCCO FLUSH WITH WALLS OF PIPE.
11. PROVIDE A 316 SST PIPE SADDLE FOR CONNECTING THE 25mm SCH 80 PVC CHLORINE SOLUTION LINE. PROVIDE A PVC BALL VALVE UPSTREAM OF THE CONNECTION.
12. LOCATE THE FLOW METER AS SHOWN TO MAXIMIZE THE LENGTH OF PIPE UPSTREAM AND DOWNSTREAM OF THE FLOW METER.

UNLESS OTHERWISE NOTED, LINEAR DIMENSIONS SHOWN ARE IN MILLIMETERS.

NOTE: A3 SIZE REDUCED TO HALF SCALE.

BID DOCUMENT SUBMITTAL

SYMB	SUBMITTAL/REVISION DESCRIPTION	DATE	APR
B	BID DOCUMENT SUBMITTAL	09/26/10	BRG
A	95% DESIGN SUBMITTAL	08/19/10	BRG

This project was made possible by the United States Agency for International Development and the generous support of the American People through USAID Global Architecture and Engineering IQC Contracts.

DESIGNED BY: BRG
DATE: 09-26-10
DRAWN BY: JLH
SUBMITTED BY: TETRA TECH
CHECKED BY: BRG
CAD FILE NAME: LT0006-U-30

USAID FROM THE AMERICAN PEOPLE

A E S P

USAID – OIEE
SARDAR GIRLS HIGH SCHOOL
KABUL, AFGHANISTAN

WELL PUMP DETAILS
SHEET 1 OF 2

SHEET REFERENCE NUMBER:
LT0006
U-30

Z:\127-1298-10001\Work Orders\WO-LT\WO-LT-0006 SGHS Utility Design\CAD\Conceptual\Civil\WOLT06-U-30, 31.dwg 9/23/2010 4:57:54 PM Koethe, Eric

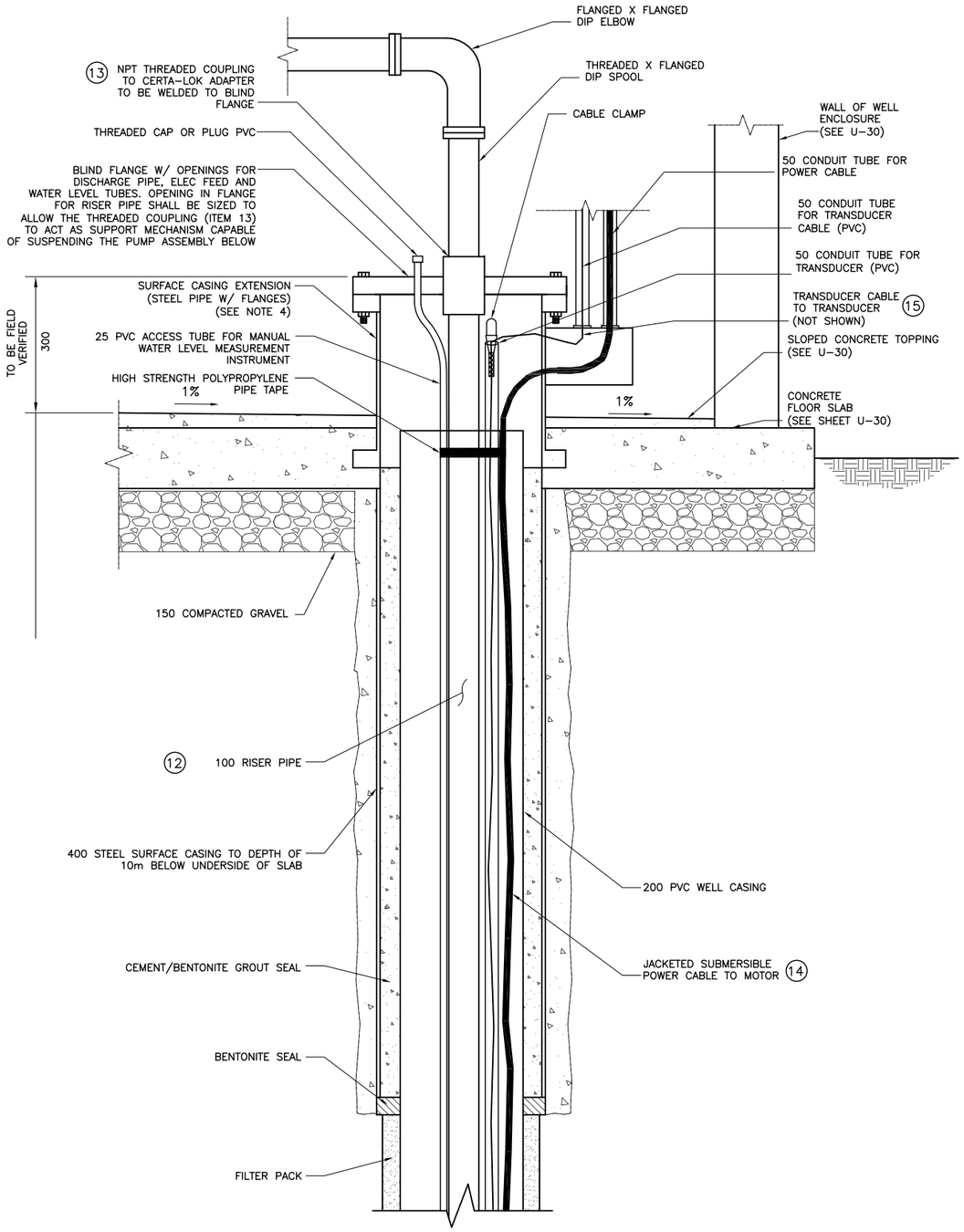

WELL HEAD DETAIL
N.T.S.

	SCHEDULE FOR DRAWINGS U–30 AND U–31		QTY
1	SUBMERSIBLE ELECTRIC MOTOR VERTICAL TURBINE	PUMP AND MOTOR TO BE DETERMINED BASED ON WELL TESTING	1
2	STAINLESS STEEL PUMP	PUMP AND MOTOR TO BE DETERMINED BASED ON WELL TESTING	1
3	STAINLESS STEEL NPT THREADED NIPPLE	100, 300mm LENGTH	2
4	STAINLESS STEEL IN–LINE CHECK VALVE	**100, POPPET STYLE, DOWN WELL**	1
5	DUCTILE IRON CHECK VALVE	100, SWING STYLE WITH SPRING, ABOVE GROUND	1
6	BALL VALVE AND HOSE BIB	BOTH 20 (SEE DETAIL DWG U-20	1
7	PRESSURE GAGE	0–7 KG/CM²	1
8	FLOWMETER	100 NPT, 10.5 LPS, INSTANTANEOUS AND TOTALIZING FLOW METER	1
9	BALL VALVE	15mm NPT	1
10	COMBINATION AIR VACUUM VALVE	15mm NPT	1
11	GATE VALVE	100mm	1
12	100MM DIAMETER DROP PIPE: CERTAINTEED CERTA–LOK PVC, SCH 80 PVC, OR APPROVED EQUAL	LENGTH OF DROP PIPE DEPENDENT UPON WELL DESIGN AS DETERMINED BY THE USAID IMPLEMENTING PARTNER AFTER THE WELL LOG HAS BEEN COMPLETED	
13	CERTAINTEED CERTA–LOK DROP PIPE ADAPTER, STAINLESS STEEL, OR GALVANIZED STEEL AS APPLICABLE	CERTA–LOK TO 100mm NPT	2
14	JACKETED SUBMERSIBLE POWER CABLE	MANUFACTURERS RECOMMENDED CABLE FOR MOTOR LOAD AND LENGTH	1
15	TRANSDUCER AND VENTED CABLE		1

NOTES:

1. PIPE AND FITTINGS ABOVE GRADE ARE TO BE DUCTILE IRON PIPE (DIP) 100mm I.D. (MINIMUM).
2. ALL EXPOSED DUCTILE IRON PIPE AND OTHER FERROUS METAL SURFACES ARE TO BE PAINTED.
3. RISER PIPE SHALL BE 100mm I.D.
4. SIZE STEEL PIPE W/ FLANGES AS STEEL SURFACE CASING. CAST INTO CONCRETE FLOOR OF WELL PUMP SECURITY ENCLOSURE (SEE SHEET U–30).

UNLESS OTHERWISE NOTED, LINEAR DIMENSIONS SHOWN ARE IN MILLIMETERS.

NOTE: A3 SIZE REDUCED TO HALF SCALE.

BID DOCUMENT SUBMITTAL

This project was made possible by the United States Agency for International Development and the generous support of the American People through USAID Global Architecture and Engineering IQC Contracts.

SYMB	SUBMITTAL/REVISION DESCRIPTION	DATE	APR
B	BID DOCUMENT SUBMITTAL	09/26/10	BRG
A	95% DESIGN SUBMITTAL	08/19/10	BRG

DESIGNED BY: BRG
DATE: 09–26–10
DRAWN BY: EWK
SUBMITTED BY: TETRA TECH
CHECKED BY: BRG
CAD FILE NAME: LT0006–U–30

USAID FROM THE AMERICAN PEOPLE

A E S P

USAID – OIEE
SARDAR GIRLS HIGH SCHOOL
KABUL, AFGHANISTAN

WELL PUMP DETAILS
SHEET 2 OF 2

SHEET REFERENCE NUMBER:
LT0006
U–31

Z:\127–1298–10001\Work Orders\WO–LT\WO–LT–0006 SGHS Utility Design\CAD\Conceptual\Civil\WOLT06–U–30, 31.dwg 9/23/2010 5:04:06 PM Koethe, Eric

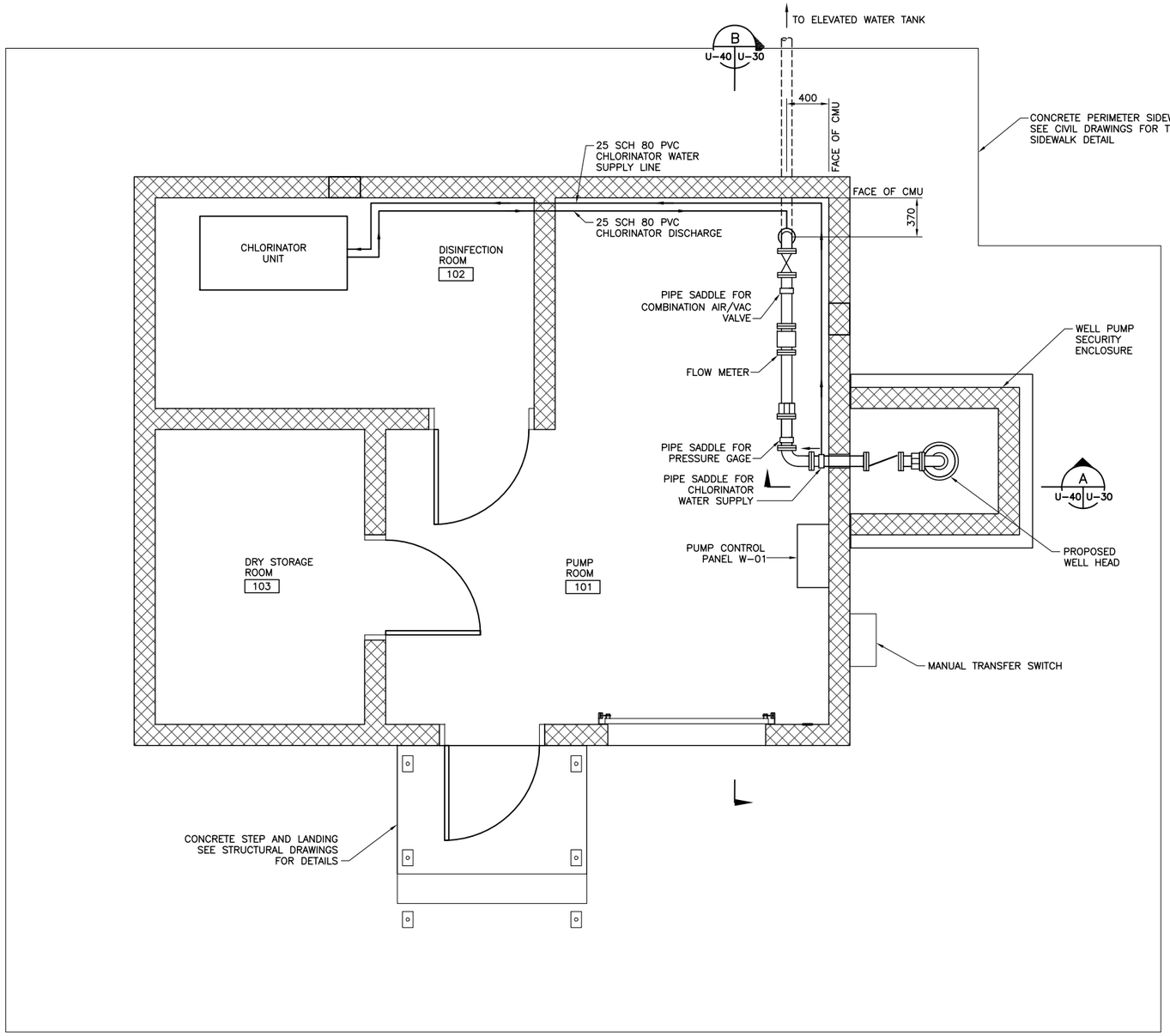

WELL BUILDING LAYOUT
SCALE 1:25

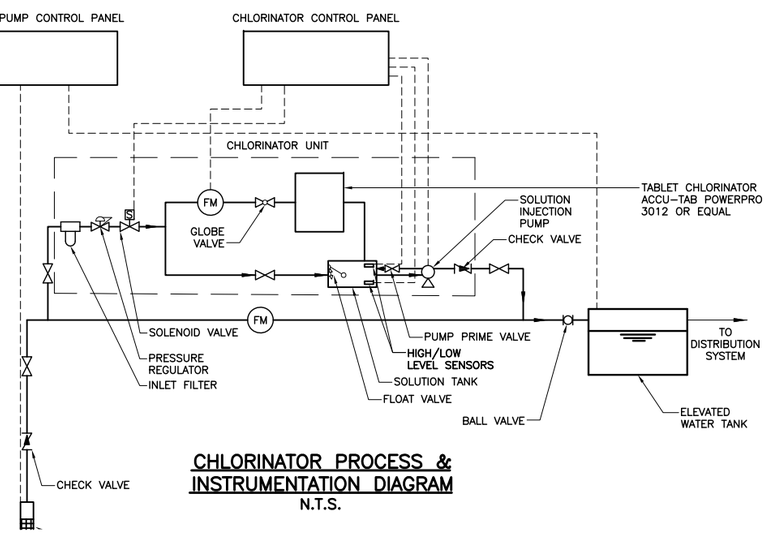

CHLORINATOR PROCESS & INSTRUMENTATION DIAGRAM
N.T.S.

UNLESS OTHERWISE NOTED, LINEAR
DIMENSIONS SHOWN ARE IN MILLIMETERS.

1 .50 0 1 1.5
1:25
NOTE: A3 SIZE REDUCED TO HALF SCALE.

BID DOCUMENT SUBMITTAL

This project was made possible by the United States Agency for International Development and the generous support of the American People through USAID Global Architecture and Engineering IQC Contracts.

SYMB	SUBMITTAL/REVISION DESCRIPTION	DATE	APR
B	BID DOCUMENT SUBMITTAL	09/26/10	BRG
A	95% DESIGN SUBMITTAL	08/19/10	BRG

DESIGNED BY: NJB
DATE: 09-26-10
DRAWN BY: ARC
SUBMITTED BY: TETRA TECH
CHECKED BY: NJB
CAD FILE NAME: WOLT06-U-40

USAID FROM THE AMERICAN PEOPLE

A E S P

USAID – OIEE
SARDAR GIRLS HIGH SCHOOL
KABUL, AFGHANISTAN

WELL BUILDING &
DISINFECTION SYSTEM

SHEET REFERENCE NUMBER:
LT0006
U-40

Z:\127-1298-10001\Work Orders\WO-LT\WO-LT-0006 SGHS Utility Design\CAD\Conceptual\Civil\WOLT06-U-40.dwg 9/23/2010 5:11:03 PM Koethe, Eric

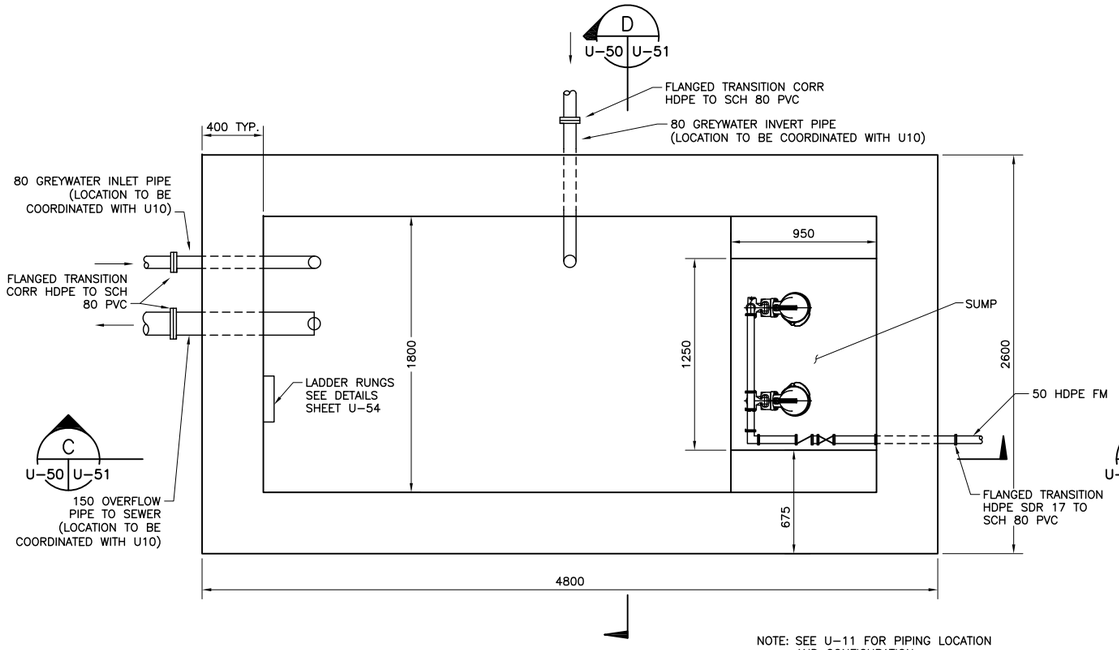

NOTE: SEE U-11 FOR PIPING LOCATION AND CONFIGURATION

GREY WATER STORAGE TANK-01
FLOOR PLAN
SCALE 1:20

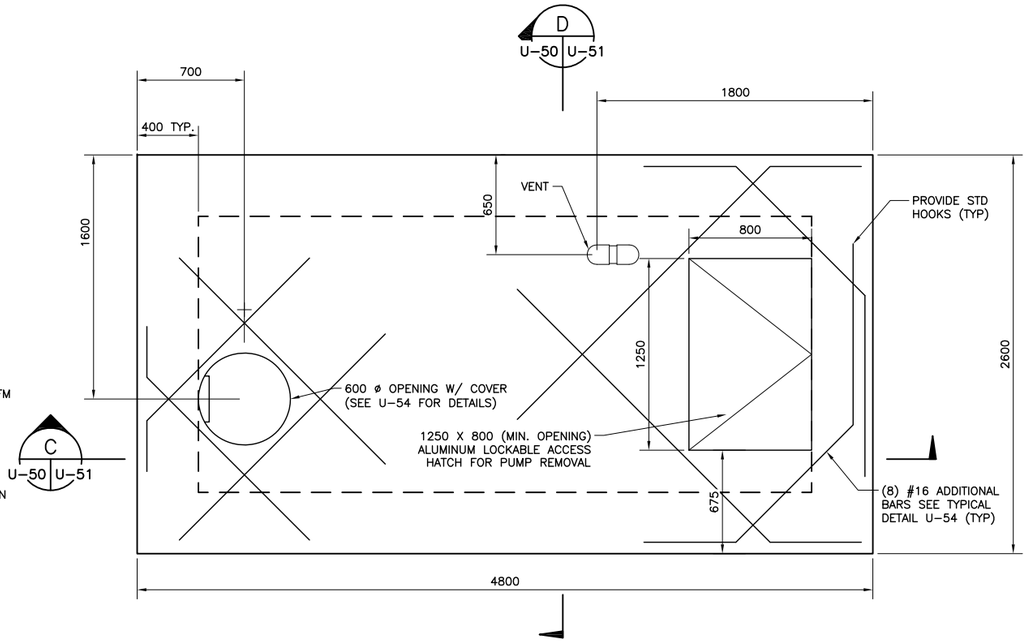

GREY WATER STORAGE TANK-01
ROOF PLAN
SCALE 1:20

UNLESS OTHERWISE NOTED, LINEAR DIMENSIONS SHOWN ARE IN MILLIMETERS.

1 .50 0 1
1:20
NOTE: A3 SIZE REDUCED TO HALF SCALE.

BID DOCUMENT SUBMITTAL

SYMB	SUBMITTAL/REVISION DESCRIPTION	DATE	APR
B	BID DOCUMENT SUBMITTAL	09/26/10	BRG
A	95% DESIGN SUBMITTAL	08/19/10	BRG

This project was made possible by the United States Agency for International Development and the generous support of the American People through USAID Global Architecture and Engineering IQC Contracts.

DESIGNED BY: NAV
DATE: 09-26-10
DRAWN BY: GPV
SUBMITTED BY: TETRA TECH
CHECKED BY: KWC
CAD FILE NAME: WOLT06-U-50

USAID FROM THE AMERICAN PEOPLE

A E S P

USAID – OIEE
SARDAR GIRLS HIGH SCHOOL
KABUL, AFGHANISTAN

GREYWATER TANK-01
PLAN

SHEET REFERENCE NUMBER:
LT0006
U-50

Z:\127-1298-10001\Work Orders\WO-LT\WO-LT-0006 SGHS Utility Design\CAD\Conceptual\Civil\WOLT06-U-50.dwg 9/25/2010 3:51:33 PM Koethe, Eric

GREY WATER PUMP SCHEDULE

NO. REQ.D	TYPE	RATING POINT			MIN. DISCH SIZE	TYPE SEAL	MOTOR						DRIVE TYPE
		CAP. l/s (GPM)	MIN. HEAD m (FT.)	MIN. EFF.			VOLTAGE	PHASE	WIRE	HZ	HP	ENCL	
2	GRINDER	2.35 (37.25)	14.6 (47.9)	30%	40mm	TANDEM MECH.	380	3	3	50	3	X PROOF	DIRECT

NOTES:
1) SEE U-10 FOR INLET, OUTLET FORCE MAIN, AND OVERFLOW INVERTS.

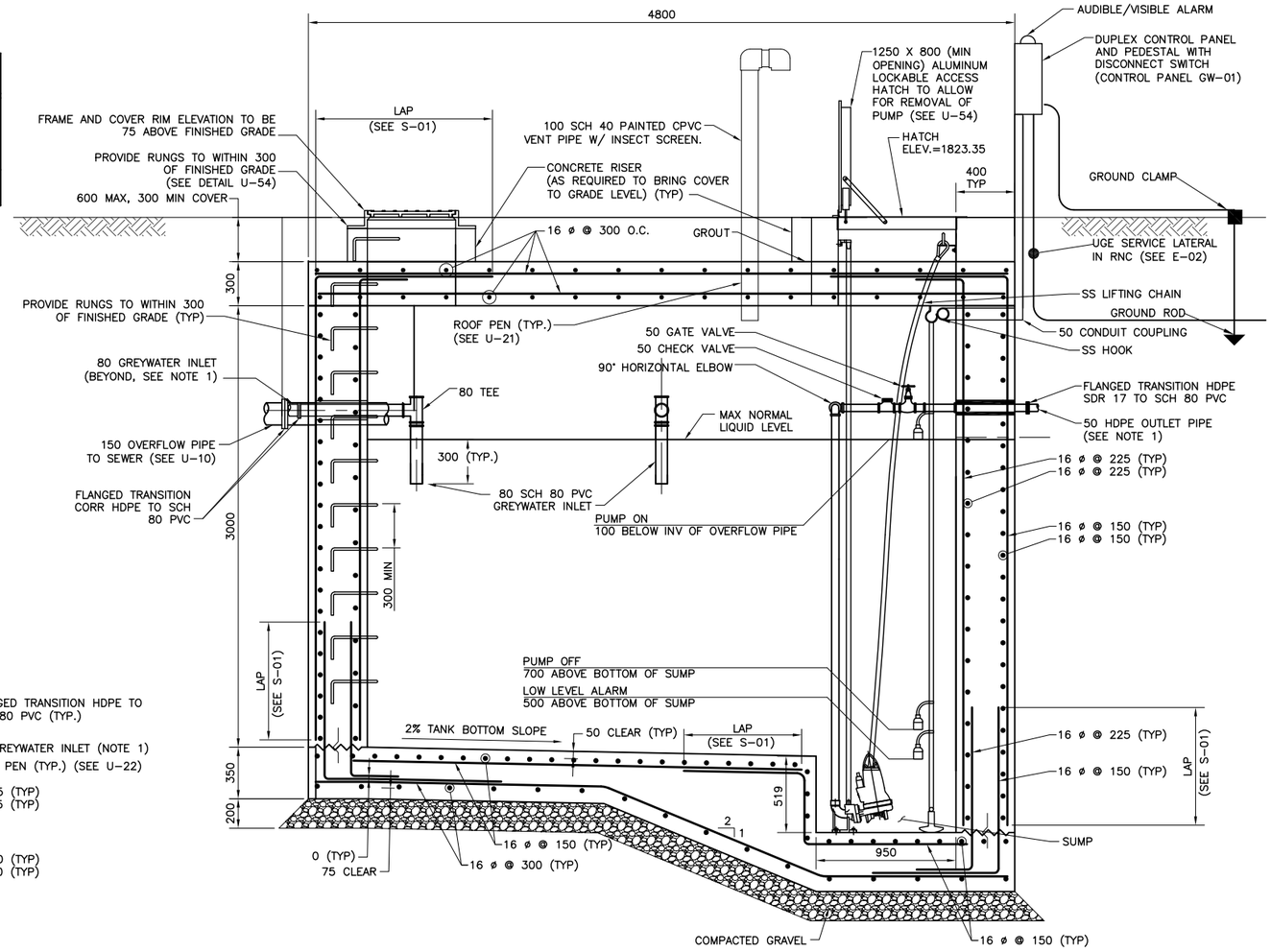

GREY WATER STORAGE TANK-01
SECTION
SCALE 1:20
C U-50 U-51

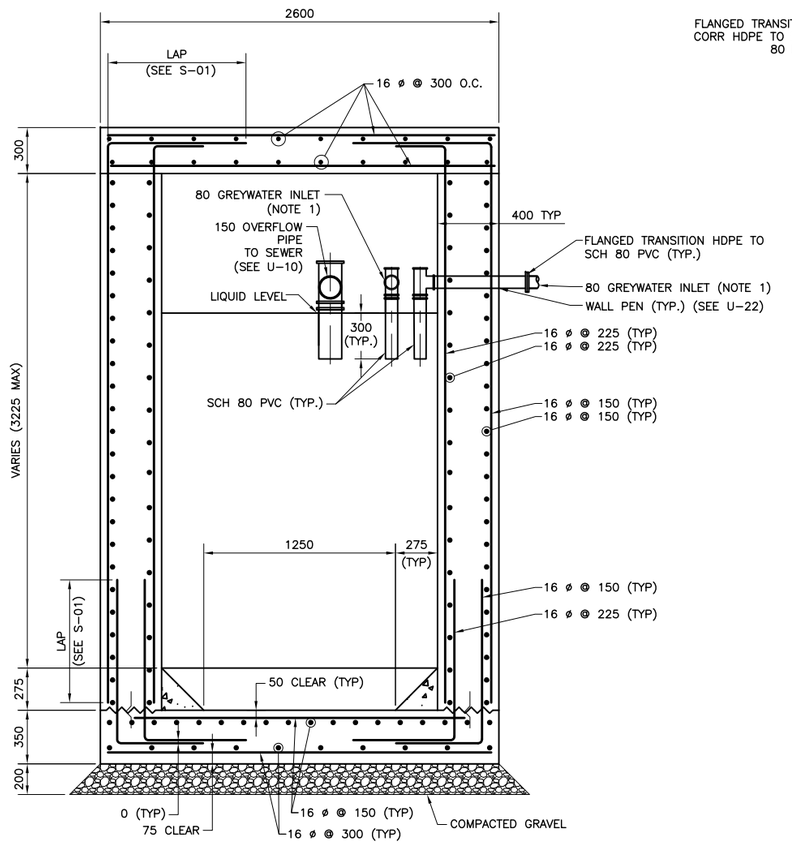

GREY WATER TANK-01
SECTION
SCALE 1:20
D U-50 U-51

UNLESS OTHERWISE NOTED, LINEAR DIMENSIONS SHOWN ARE IN MILLIMETERS.

1:25 (1 .50 0 1 1.5)
1:20 (1 .50 0 1)
NOTE: A3 SIZE REDUCED TO HALF SCALE.

BID DOCUMENT SUBMITTAL

SYMB	SUBMITTAL/REVISION DESCRIPTION	DATE	APR
B	BID DOCUMENT SUBMITTAL	09/26/10	BRG
A	95% DESIGN SUBMITTAL	08/19/10	BRG

This project was made possible by the United States Agency for International Development and the generous support of the American People through USAID Global Architecture and Engineering IQC Contracts.

DESIGNED BY: NAV
DATE: 09-26-10
DRAWN BY: GPV
SUBMITTED BY: TETRA TECH
CHECKED BY: KWC
CAD FILE NAME: WOLT06-U-51

USAID FROM THE AMERICAN PEOPLE

A E S P

USAID - OIEE
SARDAR GIRLS HIGH SCHOOL
KABUL, AFGHANISTAN

GREYWATER TANK-01 SECTIONS

SHEET REFERENCE NUMBER:
LT0006
U-51

Z:\127-1298-10001\Work Orders\WO-LT\WO-LT-0006 SGHS Utility Design\CAD\Conceptual\Civil\WOLT06-U-51.dwg 9/25/2010 4:01:09 PM Koethe, Eric

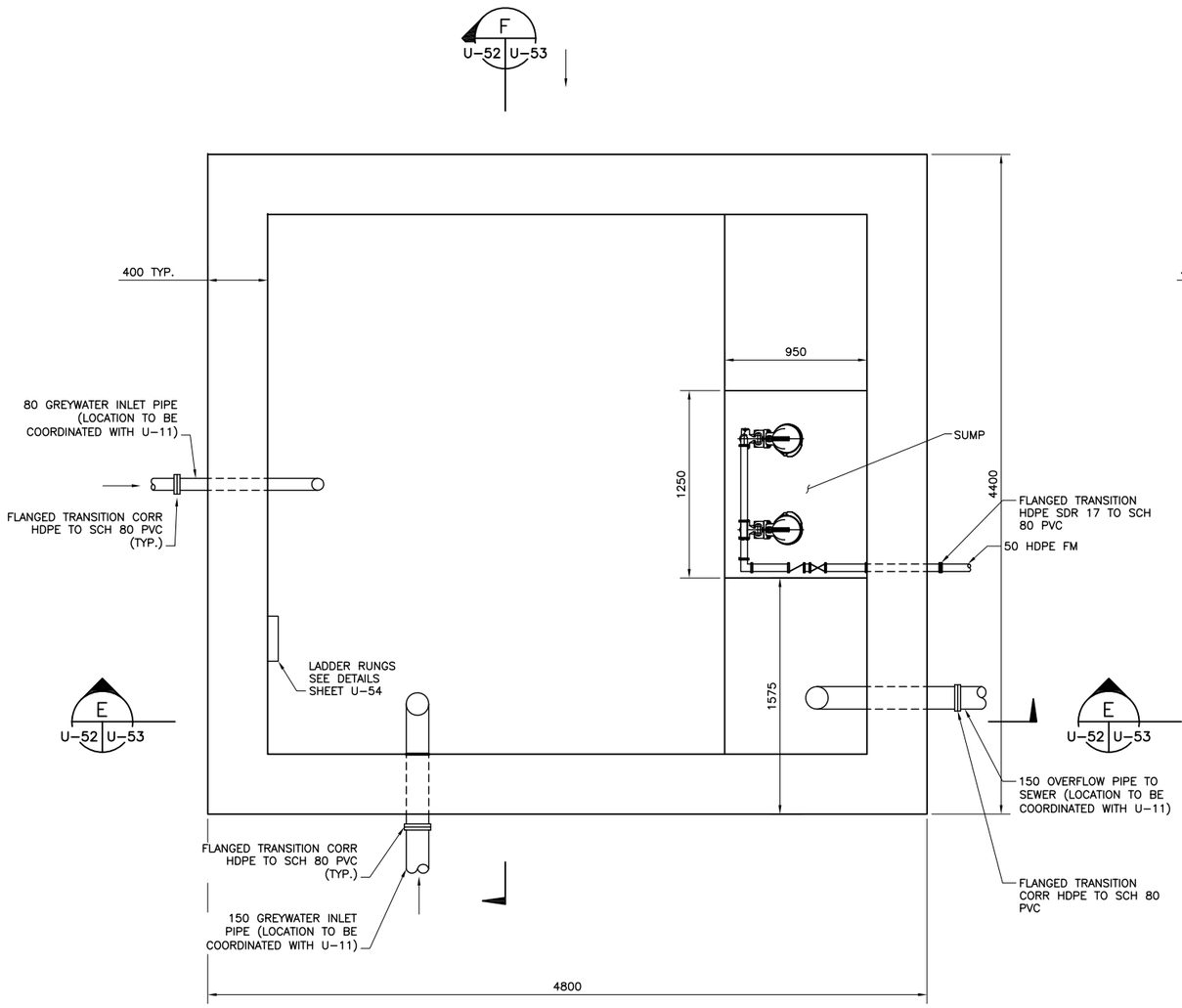

GREY WATER STORAGE TANK-02
FLOOR PLAN
SCALE 1:20

NOTE: SEE U-11 FOR PIPING LOCATION AND CONFIGURATION

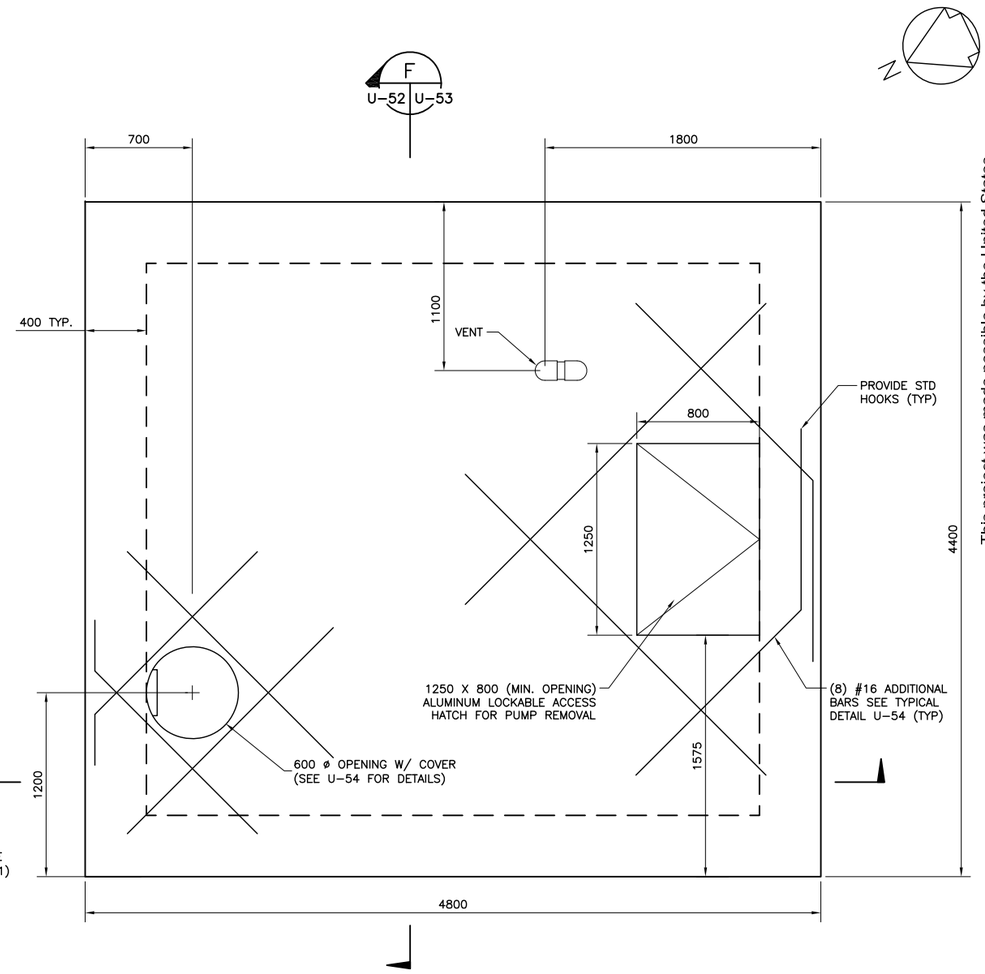

GREY WATER STORAGE TANK-02
ROOF PLAN
SCALE 1:20

UNLESS OTHERWISE NOTED, LINEAR DIMENSIONS SHOWN ARE IN MILLIMETERS.

1 .50 0 1
1:20
NOTE: A3 SIZE REDUCED TO HALF SCALE.

BID DOCUMENT SUBMITTAL

SYMB	SUBMITTAL/REVISION DESCRIPTION	DATE	APR
B	BID DOCUMENT SUBMITTAL	09/26/10	BRG
A	95% DESIGN SUBMITTAL	08/19/10	BRG

This project was made possible by the United States Agency for International Development and the generous support of the American People through USAID Global Architecture and Engineering IQC Contracts.

DESIGNED BY: NAV
DATE: 09-26-10
DRAWN BY: GPV
SUBMITTED BY: TETRA TECH
CHECKED BY: KWC
CAD FILE NAME: WOLT06-U-52

USAID FROM THE AMERICAN PEOPLE

A E S P

USAID – OIEE
SARDAR GIRLS HIGH SCHOOL
KABUL, AFGHANISTAN

GREYWATER TANK-02
PLAN

SHEET REFERENCE NUMBER:
LT0006
U-52

Z:\127-1298-10001\Work Orders\WO-LT\WO-LT-0006 SGHS Utility Design\CAD\Conceptual\Civil\WOLT06-U-52.dwg 9/25/2010 3:59:27 PM Koethe, Eric

GREY WATER PUMP SCHEDULE

NO. REQ.D	TYPE	RATING POINT			MIN. DISCH SIZE	TYPE SEAL	MOTOR						DRIVE TYPE
		CAP. l/s (GPM)	MIN. HEAD m (FT.)	MIN. EFF.			VOLTAGE	PHASE	WIRE	HZ	HP	ENCL	
2	GRINDER	2.35 (37.25)	14.6 (47.9)	30%	40mm	TANDEM MECH.	380	3	3	50	3	X PROOF	DIRECT

NOTES:
1) SEE U-11 FOR INLET, OUTLET FORCE MAIN, AND OVERFLOW INVERTS.

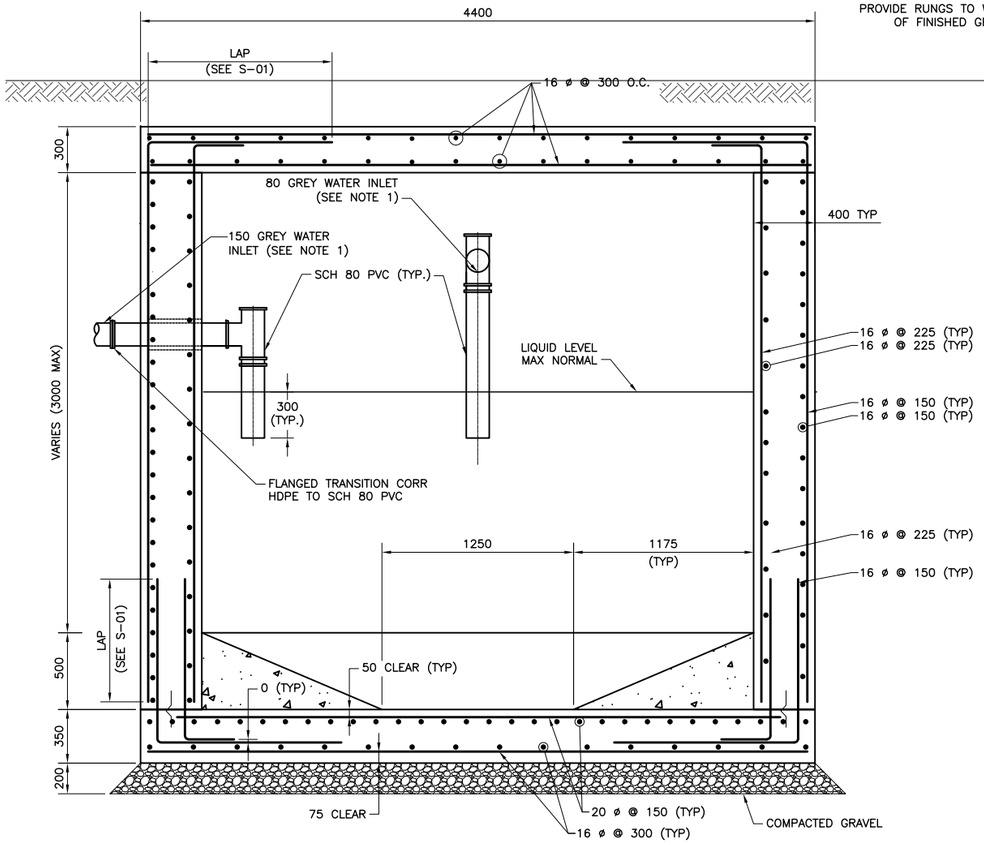

GREY WATER TANK-02
SECTION
SCALE 1:20
F
U-52 U-53

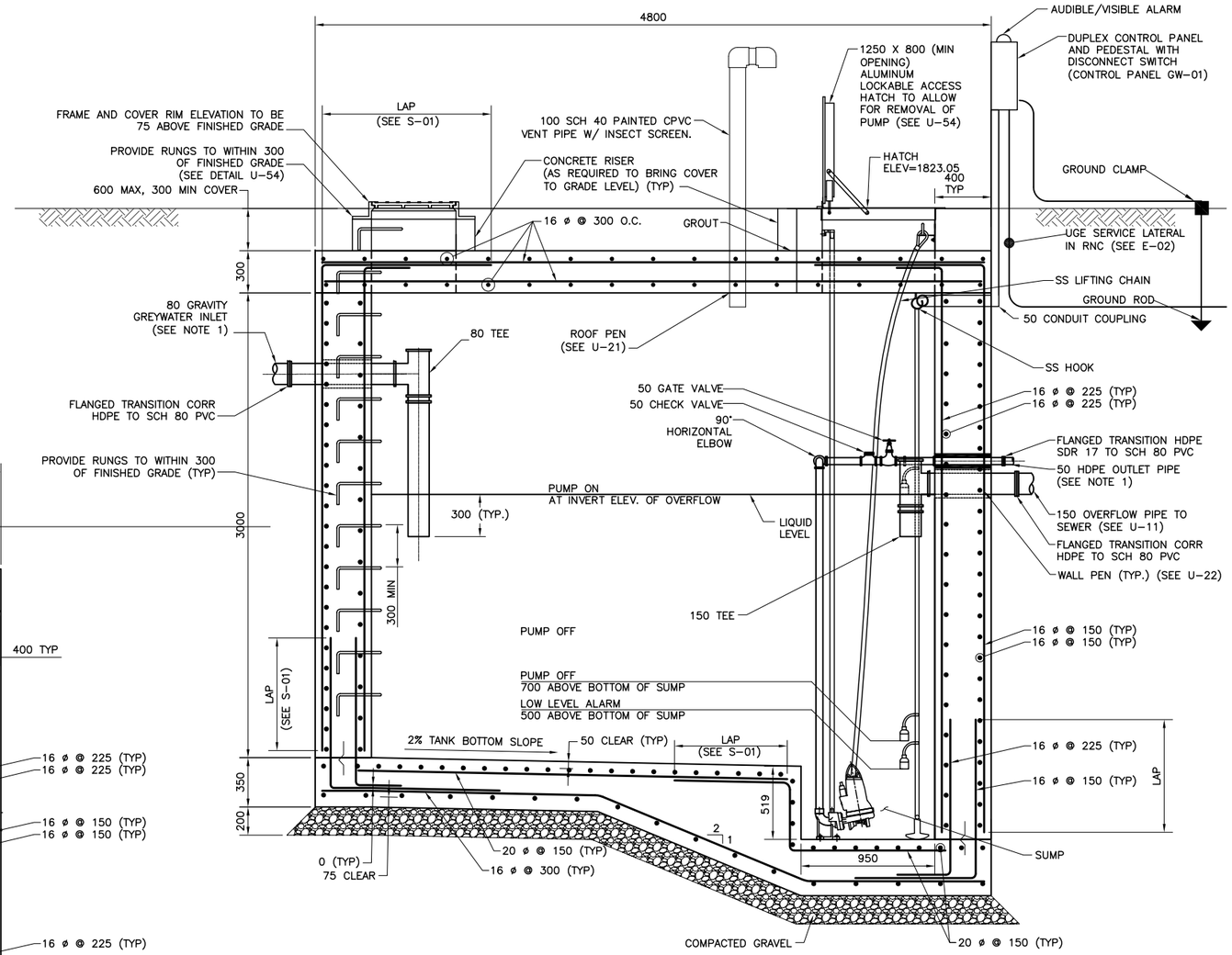

GREY WATER STORAGE TANK-02
SECTION
SCALE 1:20
E
U-52 U-53

UNLESS OTHERWISE NOTED, LINEAR DIMENSIONS SHOWN ARE IN MILLIMETERS.

1 .50 0 1
1:20
1 .50 0 1 1.5
1:25
NOTE: A3 SIZE REDUCED TO HALF SCALE.

BID DOCUMENT SUBMITTAL

SYMB	SUBMITTAL/REVISION DESCRIPTION	DATE	APR
B	BID DOCUMENT SUBMITTAL	09/26/10	BRG
A	95% DESIGN SUBMITTAL	08/19/10	BRG

This project was made possible by the United States Agency for International Development and the generous support of the American People through USAID Global Architecture and Engineering IQC Contracts.

DESIGNED BY: NAV
DRAWN BY: GPV
CHECKED BY: KWC
DATE: 09-26-10
SUBMITTED BY: TETRA TECH
CAD FILE NAME: WOLT06-U-53

USAID FROM THE AMERICAN PEOPLE

A E S P

USAID – OIEE
SARDAR GIRLS HIGH SCHOOL
KABUL, AFGHANISTAN

GREYWATER TANK-02 SECTIONS

SHEET REFERENCE NUMBER:
LT0006
U-53

Z:\127-1298-10001\Work Orders\WO-LT\WO-LT-0006 SGHS Utility Design\CAD\Conceptual\Civil\WOLT06-U-53.dwg 9/25/2010 4:05:46 PM Koethe, Eric

NOTES:

GENERAL

1.) THE GRAY WATER STORAGE TANKS AND WASTEWATER HOLDING TANK HAVE BEEN DESIGNED IN ACCORDANCE WITH: C

A.) ACI 318-08 SPECIFICATION.
B.) PCA RECTANGULAR CONCRETE TANKS (REVISED FIFTH EDITION)
C.) SEISMIC DESIGN PER 2002 SPECIFICATIONS OF THE AMERICAN ASSOCIATION OF STATE HIGHWAY AND TRANSPORTATION OFFICIALS WITH CURRENT INTERIM SPECIFICATIONS (AASHTO).

2.) ALL DIMENSIONS AND CONDITIONS MUST BE VERIFIED BY THE CONTRACTOR IN THE FIELD AND ANY DISCREPANCIES SHALL BE BROUGHT TO THE ATTENTION OF THE ENGINEER BEFORE PROCEEDING WITH THE AFFECTED PORTION OF THE WORK.

3.) STRUCTURAL DRAWINGS SHALL BE USED IN CONJUNCTION WITH JOB SPECIFICATIONS.

4.) LOADING:

A.) VEHICULAR LIVE LOAD ON ROOF SLAB: AASHTO HS-20
B.) SEISMIC: S_s= 1.28g
S_1= 0.51g
SITE CLASS D
IMPORTANCE FACTOR I = 1.0

5.) THE FOLLOWING GEOTECHNICAL PROPERTIES WERE USED FOR DESIGN BASED ON STRUCTURAL FILL. CONTRACTOR NEEDS TO VERIFY THE GEOTECHNICAL PROPERTIES AND NOTIFY THE ENGINEER OF ANY DIFFERENCES:

A.) UNIT WEIGHT OF SOIL: 1920 Kg/M³ [120 PCF]
B.) ALLOWABLE BEARING PRESSURE: 71.82 kPa [1500 PSF]
C.) ACTIVE EARTH PRESSURE COEFFICIENT: Ka=0.33
D.) AT REST PRESSURE COEFFICIENT: Ko=0.55
E.) GROUND WATER IS ASSUMED TO BE 1500mm BELOW GRADE. CONTRACTOR NEEDS TO VERIFY THAT THE WATER TABLE IS NOT ABOVE THIS LEVEL. IF IT IS ABOVE THIS LEVEL, NOTIFY THE ENGINEER PRIOR TO CONSTRUCTION.

6.) STORAGE TANK FLOOR SLAB SHALL BE PLACED ON NATURAL UNDISTURBED SOIL OR ON COMPACTED SELECT FILL PREPARED AS FOLLOWS:

A.) REMOVE UNSUITABLE MATERIAL BELOW THE FOOTING AND REPLACE WITH COMPACTED SELECT FILL TO A DEPTH WHERE NATURAL SOIL AND OR COMPACT FILL IS ENCOUNTERED.
B.) FILL MATERIAL MUST BE PLACED IN LIFTS UP TO A MAXIMUM OF 150mm IN THICKNESS. EACH LIFT COMPACTED TO A MINIMUM OF 95% OF THE MAXIMUM DRY DENSITY AS DETERMINED BY ASTM D1557.

7.) SUBGRADE PREPARATION SHALL BE PERFORMED IN THE DRY. DEWATERING MAY BE REQUIRED FOR CONSTRUCTION. THE CONTRACTOR SHALL SUBMIT A DEWATERING PLAN TO THE ENGINEER FOR REVIEW.

8.) ALL UNSUITABLE MATERIAL SHALL BE REMOVED WITHIN THE LIMITS OF THE STRUCTURE.

9.) MAINTAIN LEVEL OF BACKFILL WITHIN ONE FOOT ON THE OPPOSITE SIDE OF THE TANK WHILE BACKFILLING. STOP BACKFILL AT MINIMUM 1500mm BELOW GRADE AND POUR THE ROOF SLAB, OR DO NOT BACKFILL AGAINST WALLS UNTIL THE ROOF SLAB IS IN PLACE.

10.) ALL PVC WATERSTOPS TO BE 150mm PVC TIP. TYPE 0, 5mm THICK (3 RIBS)

CONCRETE

1.) STRUCTURAL CONCRETE SHALL BE NORMAL WEIGHT CONCRETE HAVING A MINIMUM STRENGTH OF 28 MPA (4000 PSI) AT 28 DAYS. CONCRETE SHALL BE CONTROLLED CONCRETE MIX WITH A WATER/CEMENT RATIO OF 0.45.

2.) REINFORCING STEEL SHALL HAVE A YIELD STRENGTH OF 4218 Kg/cm2 AND CONFORM TO ASTM 615-60 SPECIFICATIONS.

3.) REINFORCING BARS SHALL BE LAPPED IN ACCORDANCE WITH ACI CODE REQUIREMENTS OR AS DETAILED ON THE DRAWING. REINFORCING BARS LAP SPLICE LENGTHS SHALL BE IN ACCORDANCE WITH THE SPLICE TABLE ON DWG S-01.

4.) ALL EXPOSED CONCRETE EDGES SHALL HAVE A 20mm CHAMFER.

5.) PROTECTIVE CONCRETE COVER FOR REINFORCEMENT:

A.) CONCRETE PLACED AGAINST EARTH, 75mm.
B.) FORMED CONCRETE WALLS, 50mm.
C.) PROVIDE 50mm CONCRETE COVER UNLESS NOTED OTHERWISE.

6.) SEE SPECIFICATIONS FOR TRANSPORTING, PLACING AND CURING CAST-IN-PLACE CONCRETE.

7.) ALL EMBEDDED ITEMS TO BE PLACED AND SECURED BEFORE CONCRETE PLACEMENT. NO "WET SETTING" OF EMBEDDED ITEMS WILL BE ALLOWED.

8.) FOR STANDARD REINFORCEMENT BENDING DETAILS, SEE SHEET S-01.

NOTES CON'T:

STEEL

1.) STRUCTURAL STEEL SHAPES AND PLATES SHALL BE ASTM A36M (Fy=250MPa).

2.) STRUCTURAL STEEL PIPE SHALL BE ASTM A53M, TYPE S, GRADE B (Fy=240MPa).

3.) ALL STRUCTURAL STEEL SHALL BE HOT-DIP GALVANIZED IN ACCORDANCE WITH ASTM A123M, OR PAINTED AS PER SPECIFICATIONS.

4.) STEEL ANCHORS SHALL BE HILTI KWIK BOLT III EXPANSION ANCHORS OR APPROVED EQUIVALENT. ANCHOR BOLTS SHALL BE GALVANIZED IN ACCORDANCE WITH ASTM A123M.

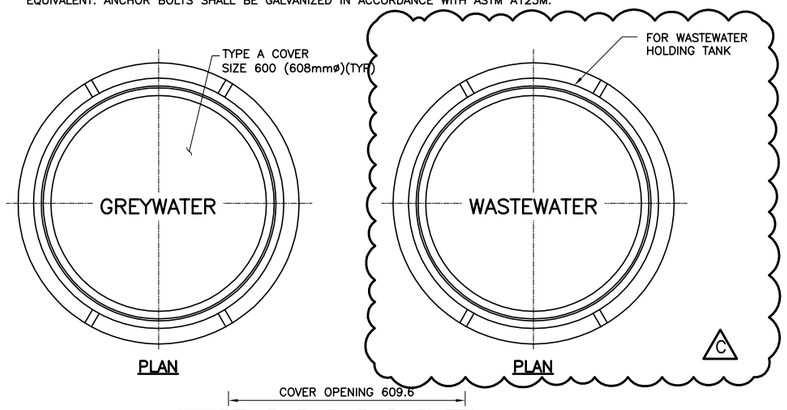

PLAN PLAN

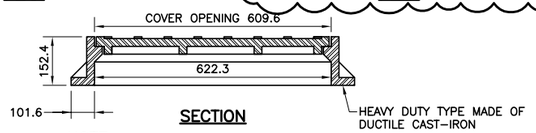

SECTION

NOTE:

FRAME INSTALLED BY SEATING IN A 1:2 GROUT MIX. JOINT SHALL NOT BE LESS THAN 20mm IN THICKNESS.

FRAME & COVER DETAIL
N.T.S.

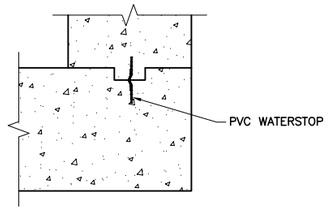

TYPICAL WALL TO SLAB CONNECTION DETAIL
SCALE 1:10

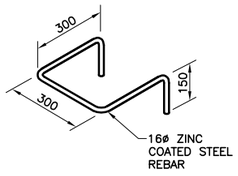

LADDER RUNG
N.T.S.

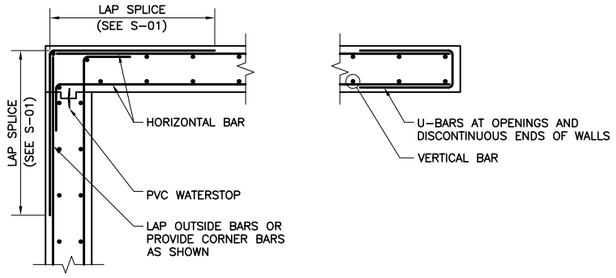

AT CORNERS AT ENDS

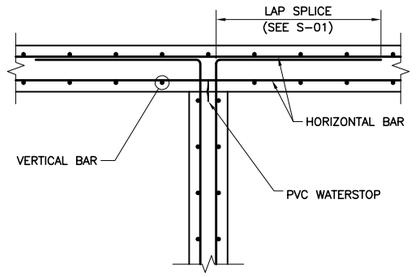

AT BAFFLE WALL

TYPICAL WALL HORIZONTAL REINFORCING DETAILS
SCALE 1:20

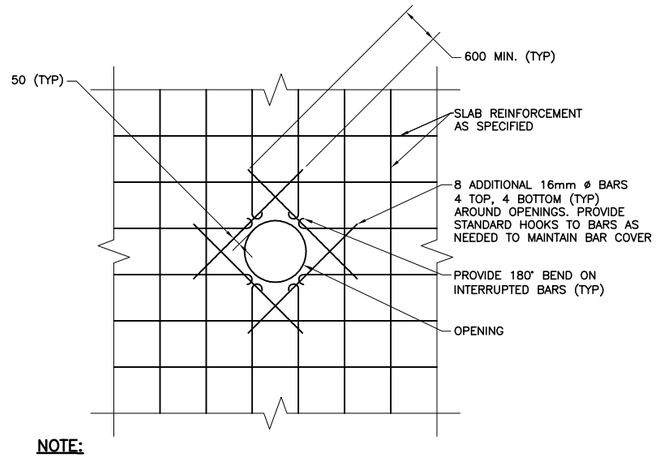

NOTE:

ALL TOP AND BOTTOM SLAB BARS INTERRUPTED BY OPENING SHALL BE REPLACED BY ADDITIONAL REINFORCING EQUAL TO THAT INTERRUPTED. PLACE HALF OF THE ADDITIONAL REINFORCING ON EACH SIDE OF OPENING AND EXTEND SAME LENGTH AS REQUIRED FOR BAR LAP OF INTERRUPTED REINFORCING

REINFORCING AROUND STRUCTURAL SLAB AND WALL OPENINGS & RE-ENTRANT CORNERS
N.T.S.

UNLESS OTHERWISE NOTED, LINEAR DIMENSIONS SHOWN ARE IN METERS.

1 .50 0 1
1:20
NOTE: A3 SIZE REDUCED TO HALF SCALE.

BID DOCUMENT SUBMITTAL

SYMB	SUBMITTAL/REVISION DESCRIPTION	DATE	APR
C	ADDED WASTEWATER HOLDING TANK DETAILS	12/09/10	BRG
B	BID DOCUMENT SUBMITTAL	09/26/10	BRG
A	95% DESIGN SUBMITTAL	08/19/10	BRG

This project was made possible by the United States Agency for International Development and the generous support of the American People through USAID Global Architecture and Engineering IQC Contracts.

DESIGNED BY: NAV
DATE: 12-09-10
DRAWN BY: GPV
SUBMITTED BY: TETRA TECH
CHECKED BY: KWC
CAD FILE NAME: WOLT06-U-54

USAID FROM THE AMERICAN PEOPLE

A E S P

USAID – OIEE
SARDAR GIRLS HIGH SCHOOL
KABUL, AFGHANISTAN

GREYWATER AND WASTEWATER TANK
GENERAL NOTES AND TYPICAL DETAILS

SHEET REFERENCE NUMBER:
LT0006
U-54

P:\1298\Work Orders\WO-LT\WO-LT-0006 SGHS Utility Design\CAD\Conceptual\Civil\WOLT06-U-54.dwg 12/12/2010 9:35:06 AM Fazelpoor, Behroz

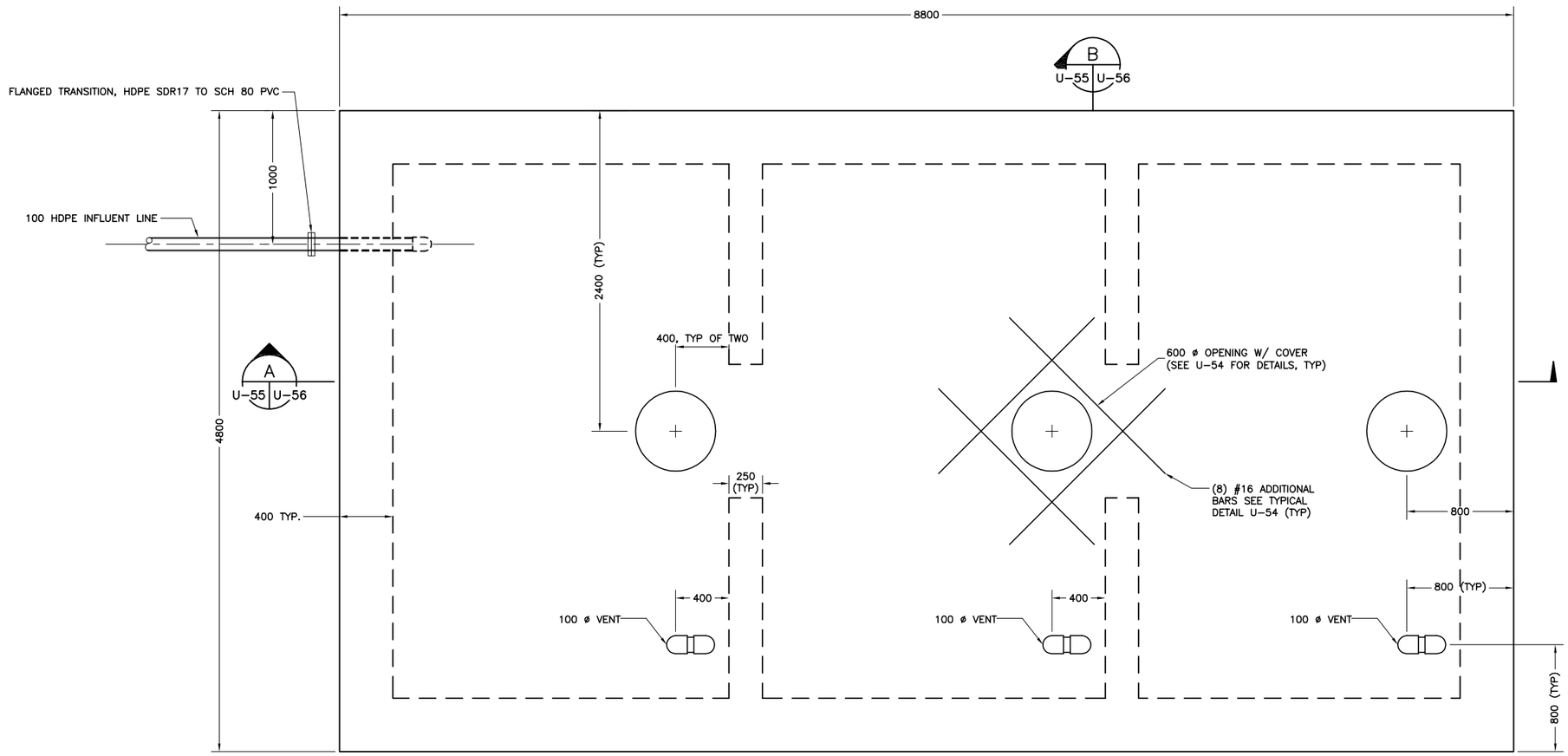

WASTEWATER HOLDING TANK PLAN

SCALE 1:20

UNLESS OTHERWISE NOTED, LINEAR DIMENSIONS SHOWN ARE IN METERS.

1 .50 0 1
1:20

NOTE: A3 SIZE REDUCED TO HALF SCALE.

BID DOCUMENT SUBMITTAL

SYMB	SUBMITTAL/REVISION DESCRIPTION	DATE	APR
A	ADDED WASTEWATER HOLDING TANK DETAILS	12/09/10	BRG

This project was made possible by the United States Agency for International Development and the generous support of the American People through USAID Global Architecture and Engineering IQC Contracts.

DESIGNED BY: BRO
DATE: 12-09-10
DRAWN BY: SLO
SUBMITTED BY: TETRA TECH
CHECKED BY: FRS
CAD FILE NAME: WOLT06-U-55

USAID FROM THE AMERICAN PEOPLE

AESP

USAID – OIEE
SARDAR GIRLS HIGH SCHOOL
KABUL, AFGHANISTAN

WASTEWATER HOLDING TANK PLAN

SHEET REFERENCE NUMBER:
LT0006
U-55

P:\1298\Work Orders\WO-LT\WO-LT-0006 SGHS Utility Design\CAD\Conceptual\Civil\WOLT06-U-55.dwg 12/12/2010 9:34:45 AM Fazelpoor, Behroz

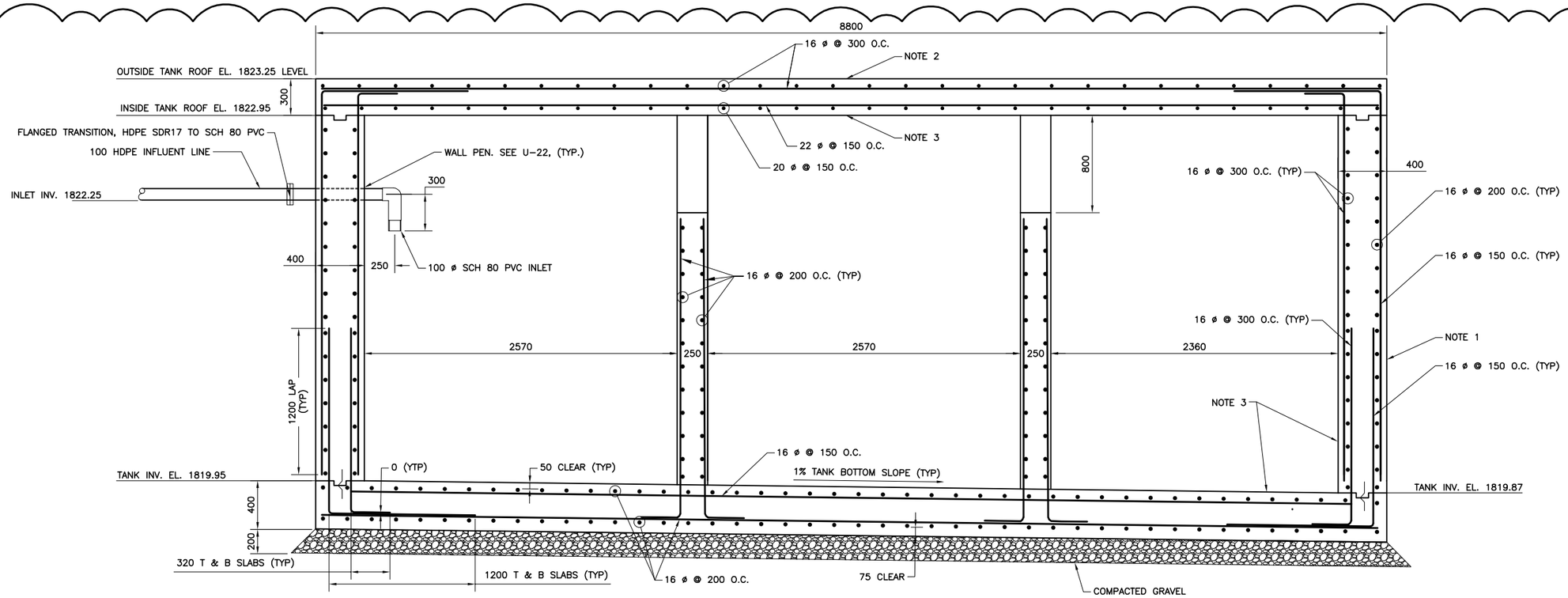

WASTEWATER HOLDING TANK SECTION A

SCALE 1:20

U-55 | U-56

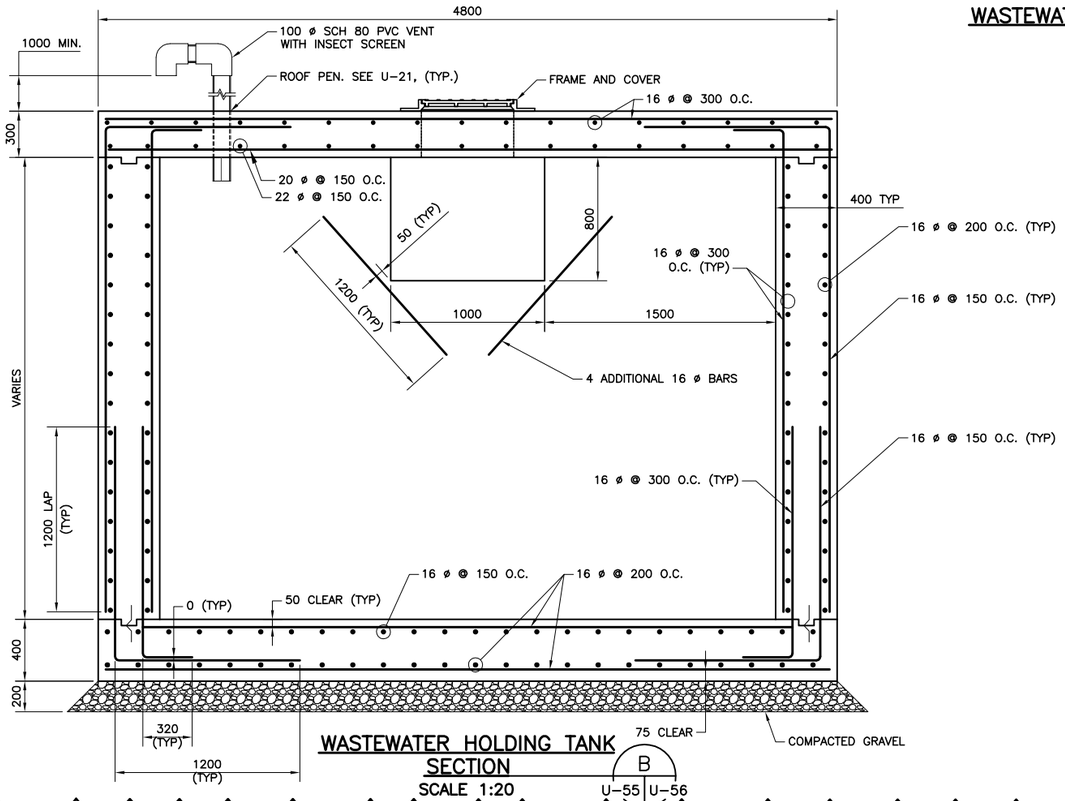

WASTEWATER HOLDING TANK SECTION B

SCALE 1:20

U-55 | U-56

NOTES:

1. AN EPOXY PRIMER AND DAMP PROOF MEMBRANE IS TO BE APPLIED TO THE EXTERIOR WALLS OF THE STORAGE TANK, FROM THE BOTTOM OF THE STRUCTURE UP TO A LEVEL 1 METER BELOW THE TOP OF THE ROOF SLAB. THE MOISTURE PROOFING SYSTEM IS TO BE SIKA DTE PRIMER, OR APPROVED EQUAL. FOLLOW THE MANUFACTURER'S DIRECTIONS IN APPLYING THE PRIMER COAT AND THE SCRATCH COAT. THE SCRATCH COAT IS A COMPOSITE MIX OF THE PRIMER MATERIAL AND SIKA DTE PRIMER/FILLER. THE SYSTEM THICKNESS SHALL BE 1 MILLIMETERS, MINIMUM.
2. THE EXPOSED PORTION OF THE WATER STORAGE TANK, INCLUDING THE TOP SLAB AND UPPER 1 METERS OF THE WALL SURFACE, SHALL BE COATED WITH A SLIP RESISTANT EPOXY SYSTEM WITH A UV RESISTANT TOP COAT. THE COATING SYSTEM IS TO BE SIKA'S SIKADUR BALCONY SYSTEM OR APPROVED EQUAL. FOLLOW THE MANUFACTURER'S DIRECTIONS IN APPLYING THE PRIMER COAT, THE BINDER COAT, THE BROADCAST AGGREGATE, AND THE UV RESISTANT SEALER COAT. THE BROADCAST AGGREGATE IS NOT TO BE APPLIED TO THE WALL PORTIONS OF THE STRUCTURE. THE SYSTEM COLOR IS TO BE GREY.
3. THE INTERIOR OF THE WATER STORAGE TANK, INCLUDING THE FLOOR, WALLS AND THE UNDERSIDE OF THE ROOF SLAB, SHALL BE COATED WITH A HIGH-BUILD EPOXY. PRIOR TO APPLYING THE COATING THE CONCRETE SURFACE IS TO BE "SACKED" TO FILL MINOR BUG HOLES AND IMPERFECTIONS IN THE CONCRETE SURFACE.. AFTER THE CONCRETE HAS REACHED THE PROPER CURE LEVEL, THE COATING SYSTEM IS APPLIED. THE COATING SYSTEM IS TO BE SIKA'S SIKAGUARD 62, OR APPROVED EQUAL. FOLLOW THE MANUFACTURER'S DIRECTIONS IN THE APPLICATION OF TWO COATS, WITH A TOTAL DRY FILM THICKNESS OF 0.25 MILLIMETERS.

A

1 .50 0 1
1:20

UNLESS OTHERWISE NOTED, LINEAR DIMENSIONS SHOWN ARE IN METERS.

NOTE: A3 SIZE REDUCED TO HALF SCALE.

BID DOCUMENT SUBMITTAL

SYMB	SUBMITTAL/REVISION DESCRIPTION	DATE	APR
1	ADDED WASTEWATER HOLDING TANK DETAILS	12/09/10	BRG

This project was made possible by the United States Agency for International Development and the generous support of the American People through USAID Global Architecture and Engineering IQC Contracts.

DESIGNED BY: BRO
DATE: 12-09-10
DRAWN BY: SLO
SUBMITTED BY: TETRA TECH
CHECKED BY: FRS
CAD FILE NAME: WOLT06-U-56

USAID FROM THE AMERICAN PEOPLE

A E S P

USAID – OIEE
SARDAR GIRLS HIGH SCHOOL
KABUL, AFGHANISTAN

WASTEWATER HOLDING TANK SECTIONS

SHEET REFERENCE NUMBER:
LT0006
U-56

P:\1298\Work Orders\WO-LT\WO-LT-0006 SGHS Utility Design\CAD\Conceptual\Civil\WOLT06-U-56.dwg 12/12/2010 9:34:22 AM Fazelpoor, Behroz

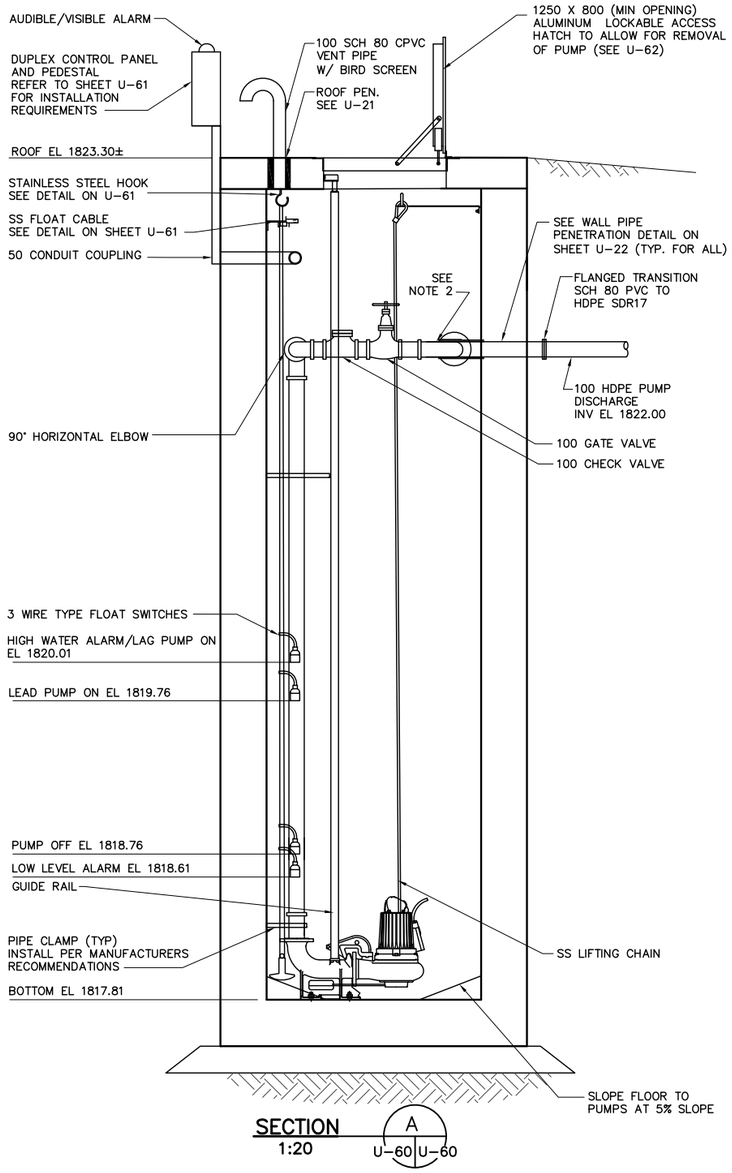

SECTION A U-60 U-60
1:20

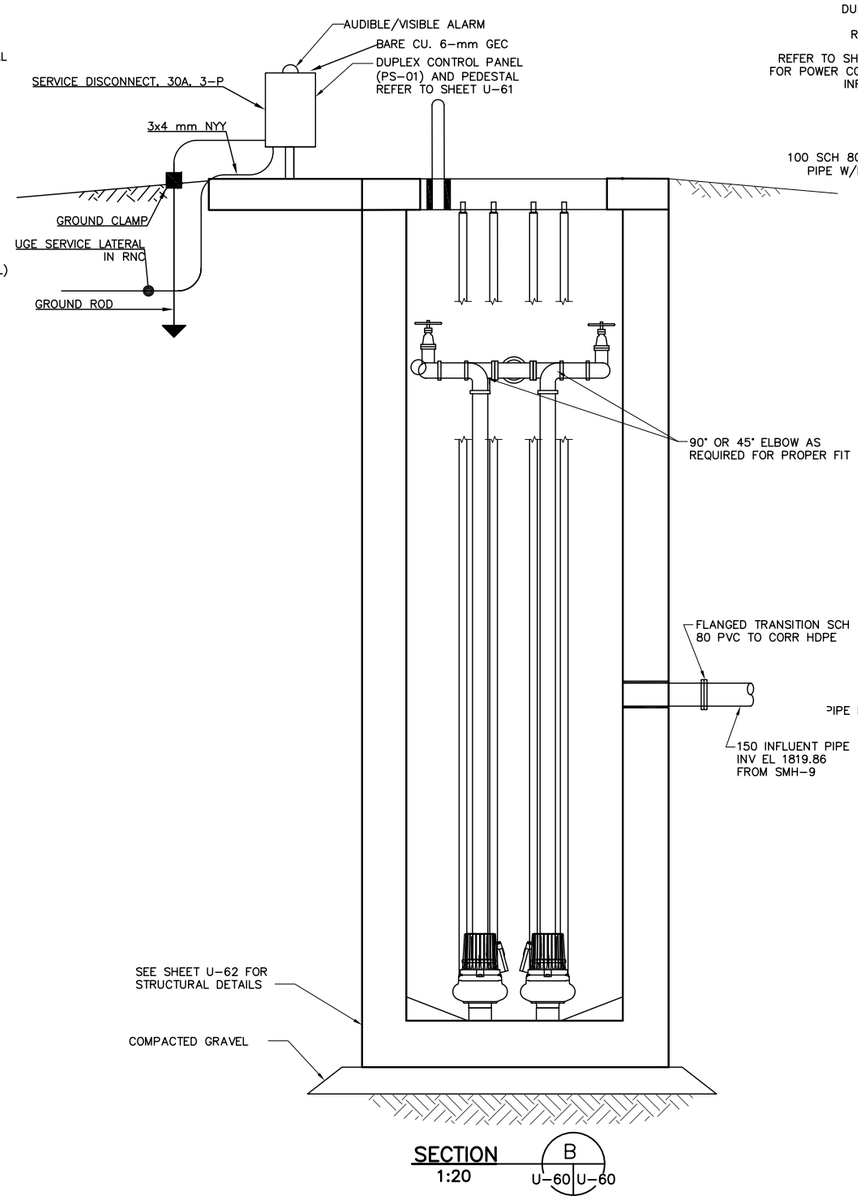

SECTION B U-60 U-60
1:20

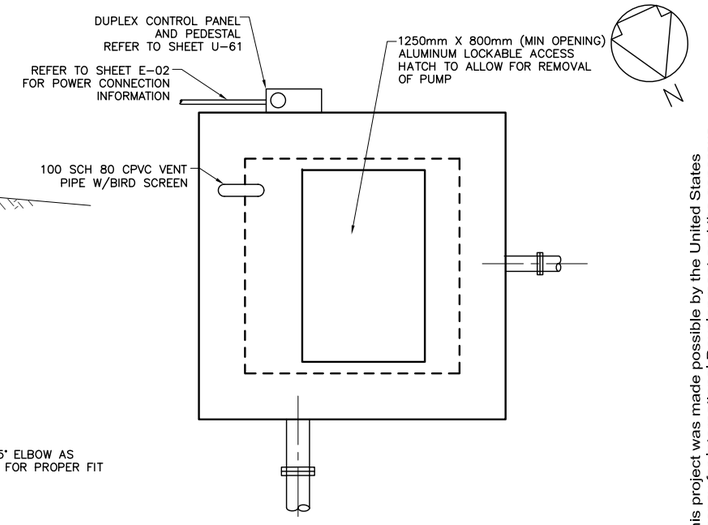

TOP SLAB PLAN
1:20

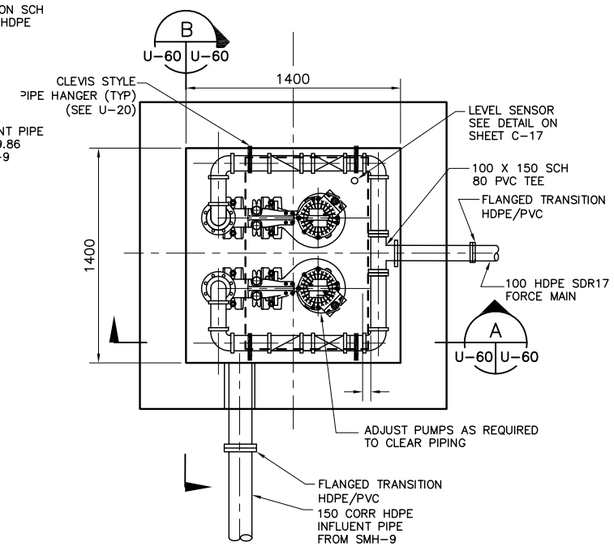

INFLUENT PUMP STATION PLAN
1:20

INFLUENT PUMP SCHEDULE

NO. REQ.D	TYPE	RATING POINT			MIN. DISCH SIZE	TYPE SEAL	MOTOR						DRIVE TYPE
		CAP. l/s (GPM)	MIN. HEAD m (FT.)	MIN. EFF.			VOLTAGE	PHASE	WIRE	HZ	HP	ENCL	
2	GRINDER	7 (110)	8 (26.3)	7%	100mm	TANDEM MECH.	380	3	3	50	3	X PROOF	DIRECT

NOTE:

1. SEE SHEET U-62 FOR STRUCTURAL DETAILS
2. ALL PIPES, VALVES, AND FITTINGS INSIDE STATION TO BE SCH. 80 PVC SOLVENT WELD

UNLESS OTHERWISE NOTED, LINEAR DIMENSIONS SHOWN ARE IN MILLIMETERS.

NOTE: A3 SIZE REDUCED TO HALF SCALE.

BID DOCUMENT SUBMITTAL

SYMB	SUBMITTAL/REVISION DESCRIPTION	DATE	APR
B	BID DOCUMENT SUBMITTAL	09/26/10	BRG
A	95% DESIGN SUBMITTAL	08/19/10	BRG

This project was made possible by the United States Agency for International Development and the generous support of the American People through USAID Global Architecture and Engineering IQC Contracts.

DESIGNED BY: BRG
DATE: 09-26-10
DRAWN BY: EWK
SUBMITTED BY: TETRA TECH
CHECKED BY: NJB
CAD FILE NAME: LT0006-U-60

USAID FROM THE AMERICAN PEOPLE

A E S P

USAID – OIEE
SARDAR GIRLS HIGH SCHOOL
KABUL, AFGHANISTAN

INFLUENT PUMP STATION

SHEET REFERENCE NUMBER:
LT0006
U-60

Z:\127-1298-10001\Work Orders\WO-LT\WO-LT-0006 SGHS Utility Design\CAD\Conceptual\Civil\WOLT06-U-60.dwg 9/25/2010 10:56:23 AM Koethe, Eric

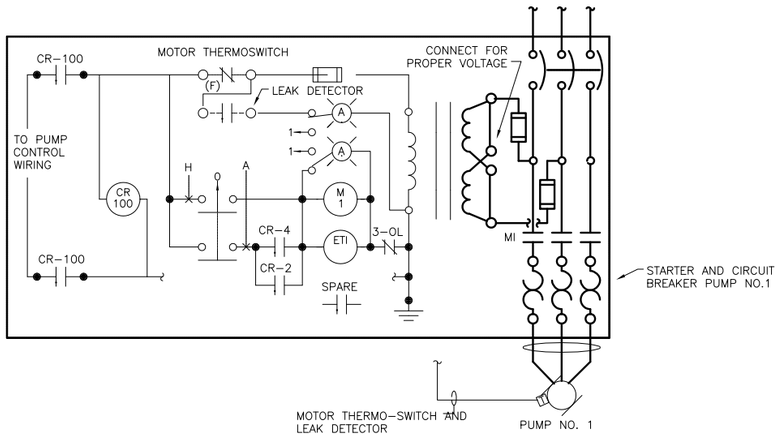

POWER WIRING DIAGRAM

PUMP NO. 1

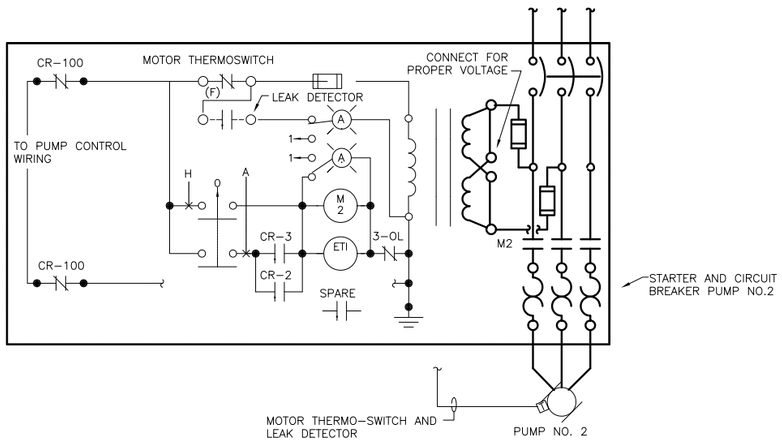

POWER WIRING DIAGRAM

PUMP NO. 2

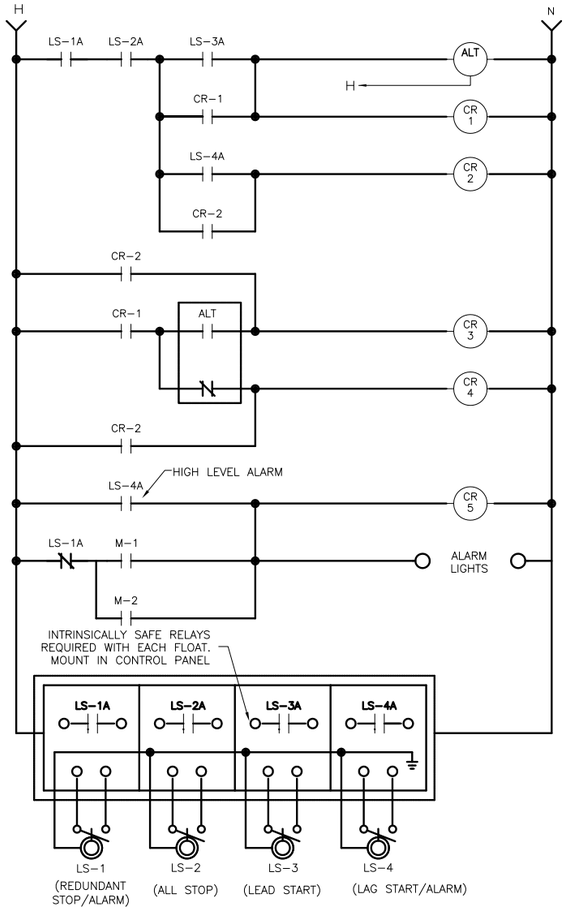

PUMP CONTROL WIRING

(BY STATION MANUFACTURER)

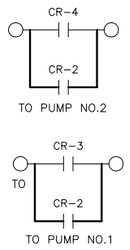

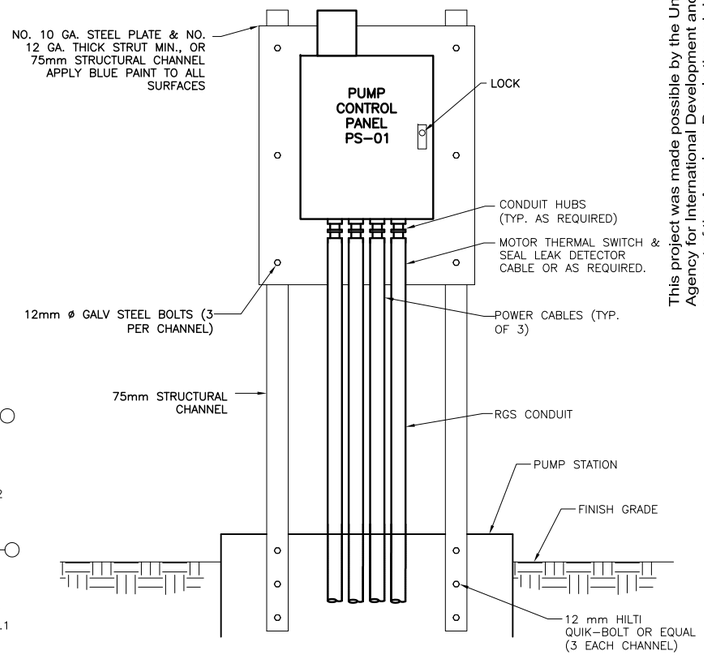

RACK MOUNTED EQUIPMENT DETAIL

N.T.S.

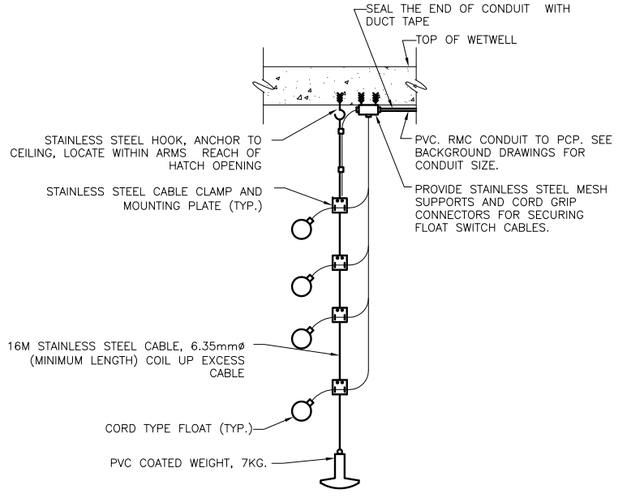

SUBMERSIBLE LEVEL SENSOR DETAIL

UNLESS OTHERWISE NOTED, LINEAR DIMENSIONS SHOWN ARE IN MILLIMETERS.

NOTE: A3 SIZE REDUCED TO HALF SCALE.

BID DOCUMENT SUBMITTAL

SYMB	SUBMITTAL/REVISION DESCRIPTION	DATE	APR
B	BID DOCUMENT SUBMITTAL	09/26/10	BRG
A	95% DESIGN SUBMITTAL	08/19/10	BRG

This project was made possible by the United States Agency for International Development and the generous support of the American People through USAID Global Architecture and Engineering IQC Contracts.

DESIGNED BY: BRG | DATE: 09-26-10
DRAWN BY: EWK | SUBMITTED BY: TETRA TECH
CHECKED BY: NJB | CAD FILE NAME: LT0006-U-61

USAID FROM THE AMERICAN PEOPLE

A E S P

USAID – OIEE
SARDAR GIRLS HIGH SCHOOL
KABUL, AFGHANISTAN

INFLUENT PUMP STATION
CONTROL PANEL DIAGRAM

SHEET REFERENCE NUMBER:
LT0006 U–61

Z:\127-1298-10001\Work Orders\WO-LT\WO-LT-0006 SGHS Utility Design\CAD\Conceptual\Civil\WOLT06-U-61.dwg 9/25/2010 10:57:43 AM Koethe, Eric

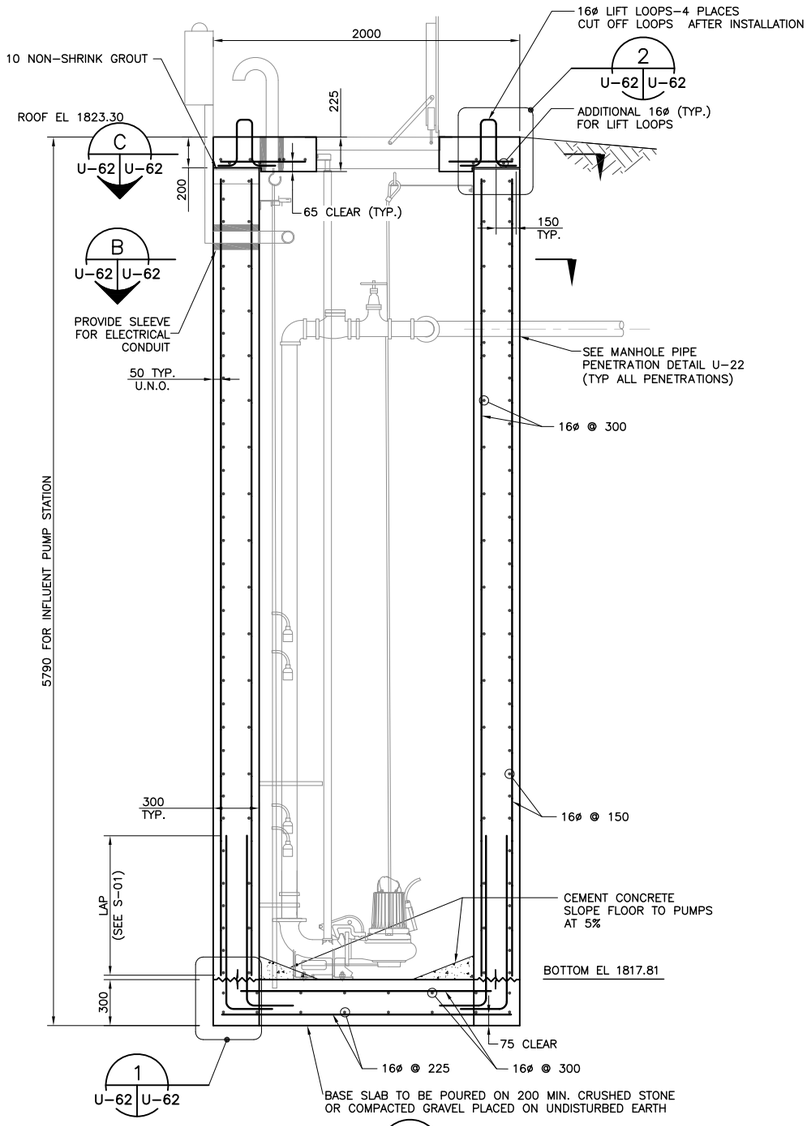

SECTION 1:20 (A, U-62 | U-62)

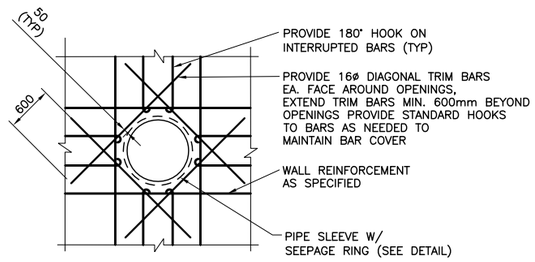

NOTE: PROVIDE ADDITIONAL REINFORCING EQUAL TO BARS INTERRUPTED, 1/2 EACH SIDE, ADDITIONAL BARS TO BE IN SAME PLANE.

REINFORCING AROUND WALL PENETRATION
N.T.S.

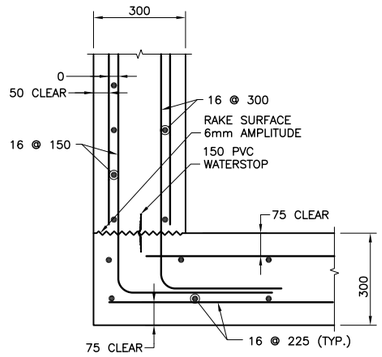

DETAIL SCALE 1:20 (1, U-62 | U-62)

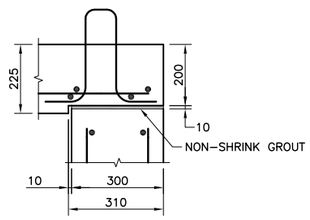

DETAIL SCALE 1:20 (2, U-62 | U-62)

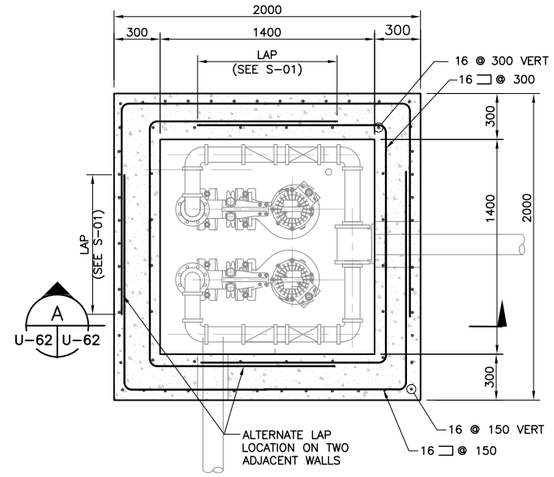

INFLUENT PUMP STATION PLAN 1:20 (B, U-62 | U-62)

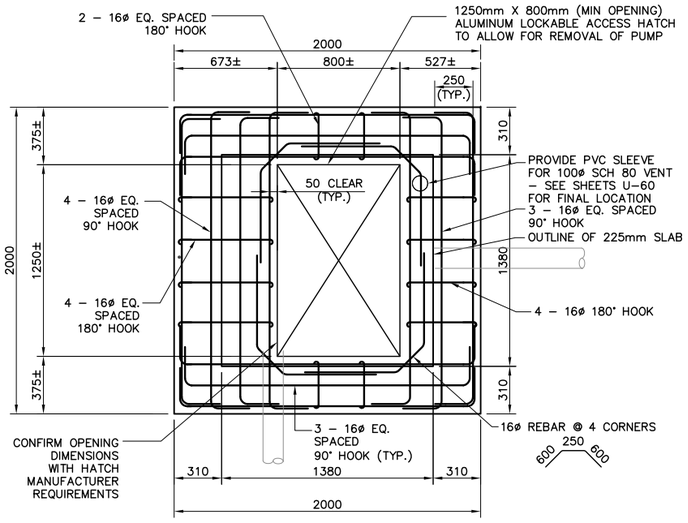

TOP SLAB REINFORCEMENT PLAN 1:20 (C, U-62 | U-62)

NOTE:

1. FOR CONCRETE AND REINFORCMENT INFORMATION SEE DRAWING U-54.

UNLESS OTHERWISE NOTED, LINEAR DIMENSIONS SHOWN ARE IN MILLIMETERS.

1 .50 0 1
1:20
NOTE: A3 SIZE REDUCED TO HALF SCALE.

BID DOCUMENT SUBMITTAL

SYMB	SUBMITTAL/REVISION DESCRIPTION	DATE	APR
B	BID DOCUMENT SUBMITTAL	09/26/10	BRG
A	95% DESIGN SUBMITTAL	08/19/10	BRG

This project was made possible by the United States Agency for International Development and the generous support of the American People through USAID Global Architecture and Engineering IQC Contracts.

DESIGNED BY: APL
DATE: 09-26-10
DRAWN BY: EWK
SUBMITTED BY: TETRA TECH
CHECKED BY: NJB
CAD FILE NAME: LT0006-U-62

USAID FROM THE AMERICAN PEOPLE

A E S P

USAID – OIEE
SARDAR GIRLS HIGH SCHOOL
KABUL, AFGHANISTAN

INFLUENT PUMP STATION DETAILS

SHEET REFERENCE NUMBER:
LT0006
U-62

Z:\127-1298-10001\Work Orders\WO-LT\WO-LT-0006 SGHS Utility Design\CAD\Conceptual\Civil\WOLT06-U-62.dwg 9/25/2010 11:00:12 AM Koethe, Eric

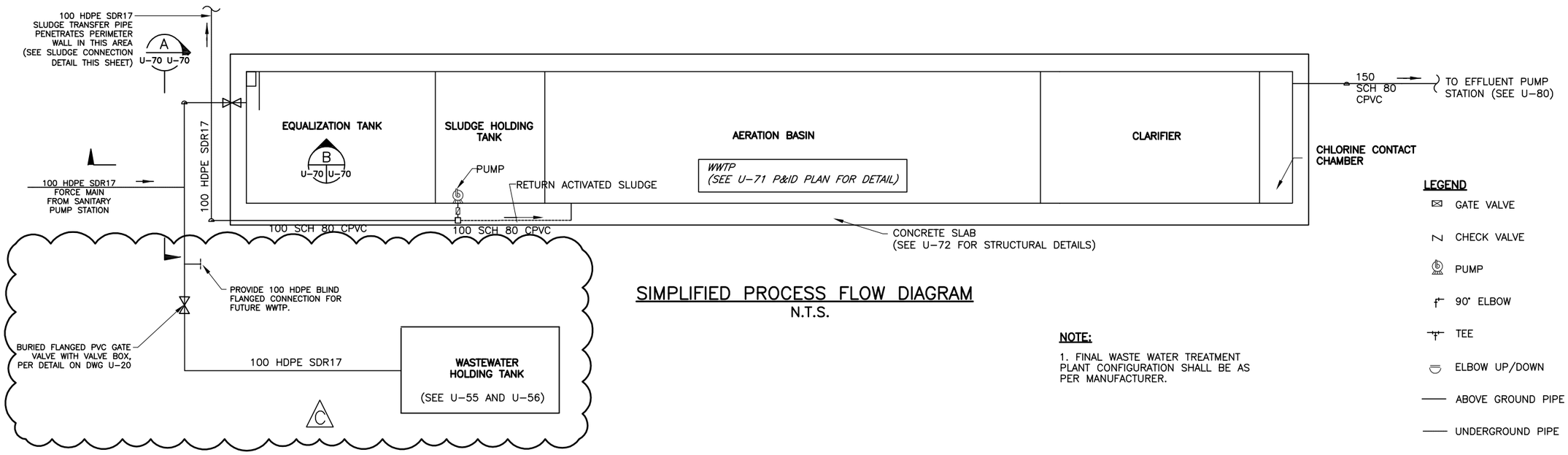

SIMPLIFIED PROCESS FLOW DIAGRAM
N.T.S.

NOTE:

1. FINAL WASTE WATER TREATMENT PLANT CONFIGURATION SHALL BE AS PER MANUFACTURER.

LEGEND

- GATE VALVE
- CHECK VALVE
- PUMP
- 90° ELBOW
- TEE
- ELBOW UP/DOWN
- ABOVE GROUND PIPE
- UNDERGROUND PIPE
- REDUCER

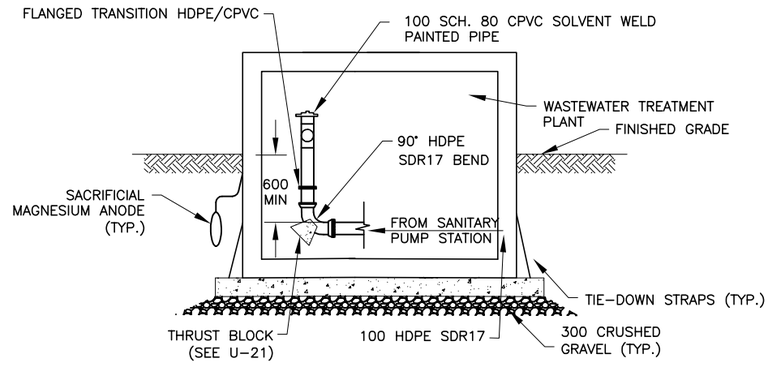

SECTION A
N.T.S.

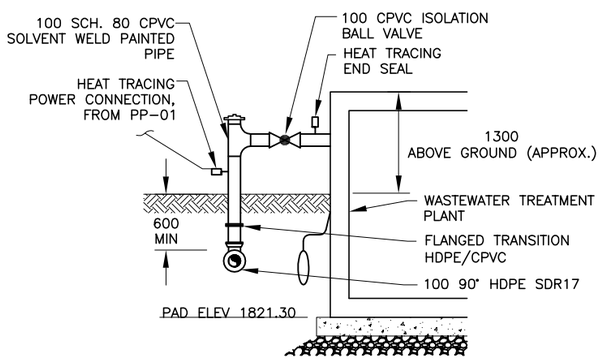

SECTION B
N.T.S.

NOTES:

1. FINAL WASTE WATER TREATMENT PLANT CONFIGURATION SHALL BE AS PER MANUFACTURER.
2. ALL ABOVE GROUND PIPING TO BE SCH 80 CPVC, AND FITTED WITH FREEZE PROTECTION EQUIPMENT (IF PIPE COULD REMAIN FILLED WITH SEWAGE OR SLUDGE UNDER NORMAL OPERATING CONDITIONS).
3. EQUIPMENT IS TO INCLUDE 25mm FOAMED ELASTOMER INSULATION, HEAT TRACING (SELF REGULATING CABLE, 12.5 watt/m, TYCO 5XTV2 OR EQUAL), AND ALUMINUM JACKET (0.6mm THICKNESS).
4. POWER FOR THE HEAT TRACING SYSTEMS SHALL BE FROM PP-01

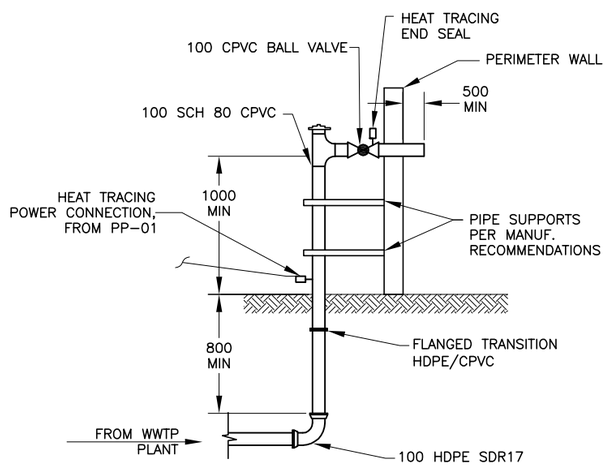

SLUDGE CONNECTION DETAIL
N.T.S.

UNLESS OTHERWISE NOTED, LINEAR DIMENSIONS SHOWN ARE IN MILLIMETERS.

NOTE: A3 SIZE REDUCED TO HALF SCALE.

BID DOCUMENT SUBMITTAL

SYMB	SUBMITTAL/REVISION DESCRIPTION	DATE	APR
A	95% DESIGN SUBMITTAL	08/19/10	BRG
B	BID DOCUMENT SUBMITTAL	09/26/10	BRG
△C	ADDED WASTEWATER HOLDING TANK	12/09/10	BRG

This project was made possible by the United States Agency for International Development and the generous support of the American People through USAID Global Architecture and Engineering IQC Contracts.

DESIGNED BY: BRG
DRAWN BY: EWK
CHECKED BY: DL
DATE: 12-09-10
SUBMITTED BY: TETRA TECH
CAD FILE NAME: LT0006-U-70

USAID FROM THE AMERICAN PEOPLE

A E S P

USAID – OIEE
SARDAR GIRLS HIGH SCHOOL
KABUL, AFGHANISTAN

WASTEWATER TREATMENT PLANT LAYOUT

SHEET REFERENCE NUMBER:
U-70

P:\1298\Work Orders\WO-LT\WO-LT-0006 SGHS Utility Design\CAD\Conceptual\Civil\WOLT06-U-70, 71, 72.dwg 12/12/2010 9:33:57 AM Fazelpoor, Behroz

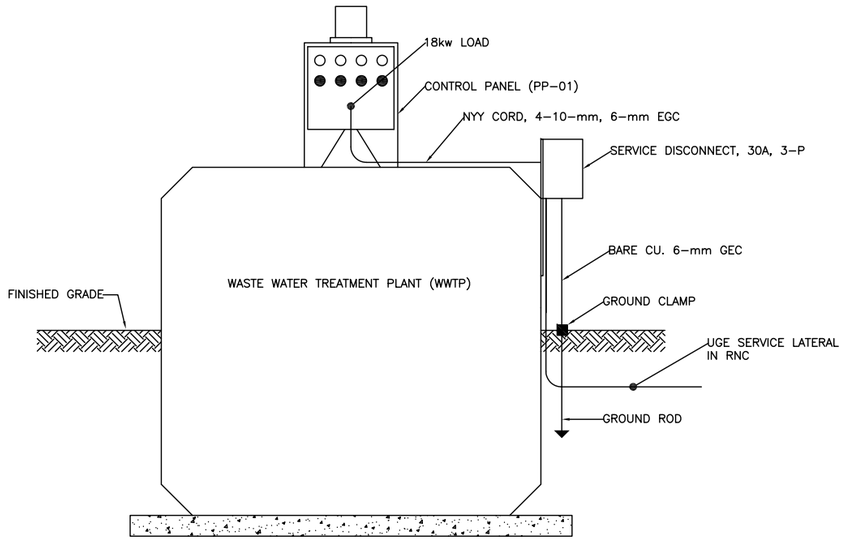

WWTP ELECTRICAL CONNECTION
N.T.S

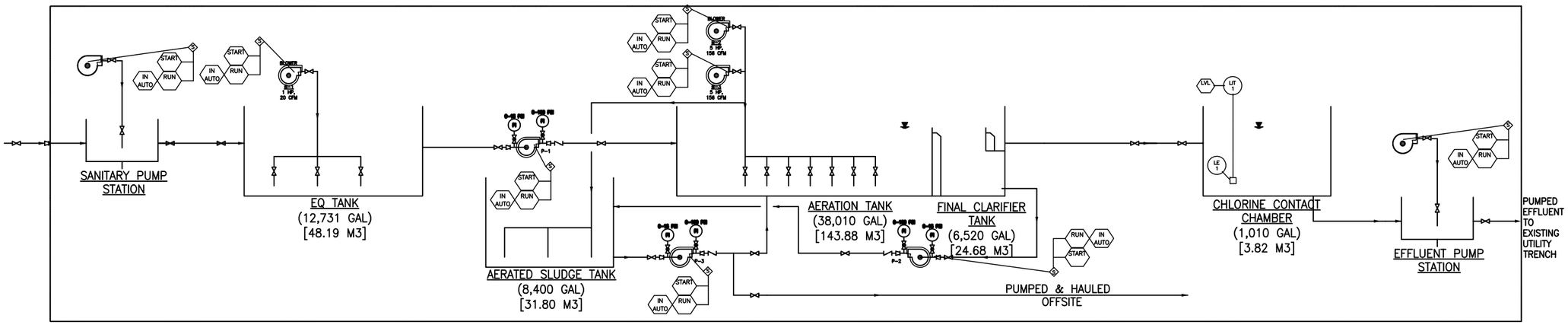

UNLESS OTHERWISE NOTED, LINEAR DIMENSIONS SHOWN ARE IN MILLIMETERS.

NOTE: A3 SIZE REDUCED TO HALF SCALE.

BID DOCUMENT SUBMITTAL

This project was made possible by the United States Agency for International Development and the generous support of the American People through USAID Global Architecture and Engineering IQC Contracts.

SYMB	SUBMITTAL/REVISION DESCRIPTION	DATE	APR
B	BID DOCUMENT SUBMITTAL	09/26/10	BRG
A	95% DESIGN SUBMITTAL	08/19/10	BRG

DESIGNED BY: BRG
DATE: 09-26-10
DRAWN BY: EWK
SUBMITTED BY: TETRA TECH
CHECKED BY: DL
CAD FILE NAME: LT0006-U-71

USAID FROM THE AMERICAN PEOPLE

A E S P

USAID – OIEE
SARDAR GIRLS HIGH SCHOOL
KABUL, AFGHANISTAN

WASTEWATER TREATMENT PROCESS AND INSTRUMENTATION DIAGRAM

SHEET REFERENCE NUMBER:
LT0006
U-71

Z:\127-1298-10001\Work Orders\WO-LT\WO-LT-0006 SGHS Utility Design\CAD\Conceptual\Civil\WOLT06-U-70, 71, 72.dwg 9/25/2010 11:14:55 AM Koethe, Eric

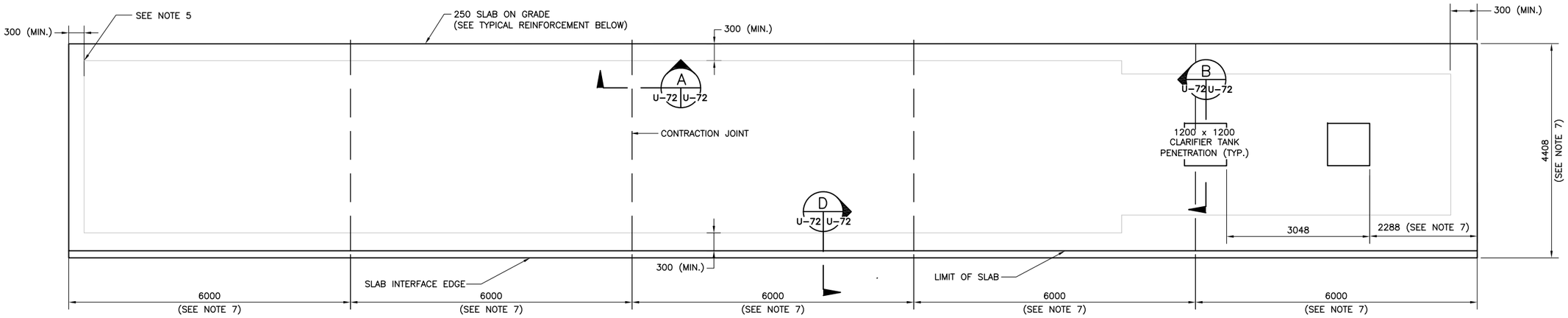

WWTP
SLAB BELOW GRADE
N.T.S

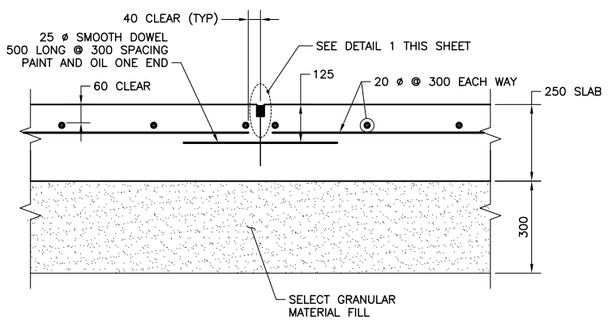

CONTRACTION JOINT DETAIL SECTION
N.T.S. A U-72 U-72

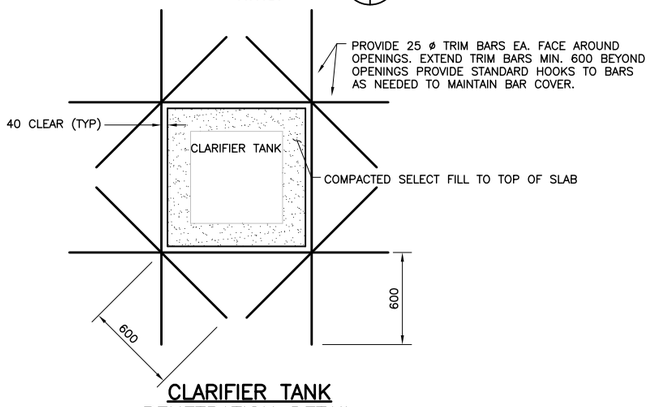

CLARIFIER TANK PENETRATION DETAIL SECTION
1:40 C U-72 U-72

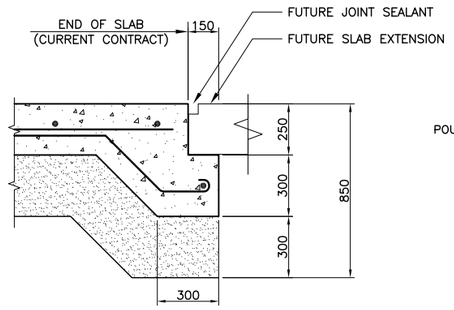

SLAB INTERFACE EDGE DETAIL SECTION
N.T.S. D U-72 U-72

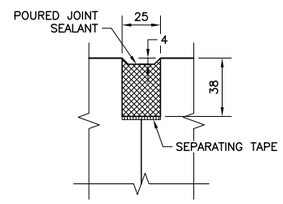

DETAIL – 1
N.T.S.

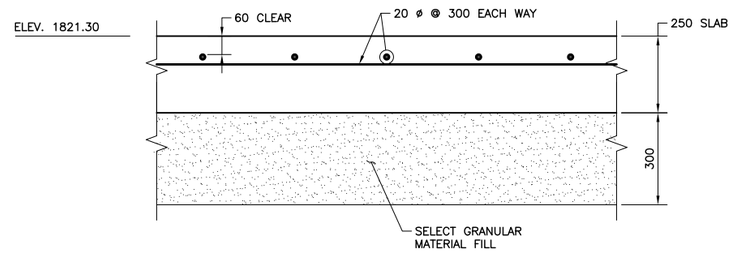

SLAB BELOW GRADE TYPICAL REINFORCEMENT DETAIL
N.T.S.

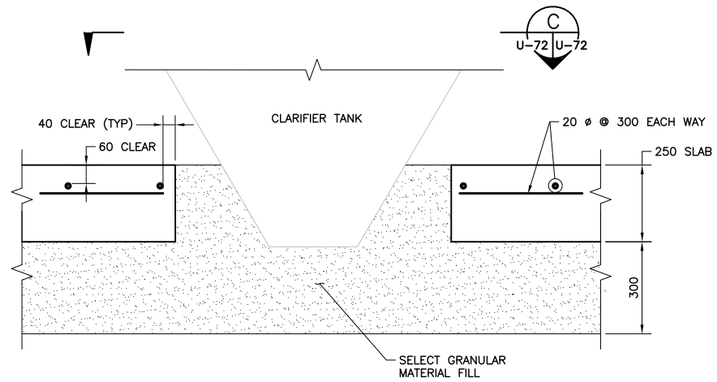

CLARIFIER TANK PENETRATION DETAIL SECTION
N.T.S. B U-72 U-72

NOTES:

1. SLAB SHALL BE PLACED ON 300mm SELECT GRANULAR MATERIAL PLACED IN TWO EQUAL LIFTS OF 150mm EACH COMPACTED TO A MIN. OF 95% OF THE MAXIMUM DRY DENSITY AS DETERMINED BY ASTM D1557 AT MOISTURE CONTENT OF MINUS 1% TO PLUS 2% OF THE OPTIMUM.
2. STRUCTURAL CONCRETE SHALL BE NORMAL WEIGHT CONCRETE TYPE V CEMENT HAVING A MINIMUM STRENGTH OF 290 kg/cm² AT 28 DAYS.
3. REINFORCING STEEL SHALL CONFORM TO ASTM A615/A615M–06 GRADE 420.
4. LAP SPLICE FOR 20ø BARS SHALL BE 1600mm LONG.
5. SEE SHEET U–70 FOR WWTP DIMENSIONS AND SIZE AND LOCATIONS OF PIPE PENETRATIONS THRU SLAB.
6. PROVIDE PVC OR STEEL PIPE SLEEVE 50mm GREATER IN DIAMETER AT ALL UTILITY PENETRATIONS.
7. SLAB DIMENSIONS SHALL BE BASED ON WWTP SIZES PROVIDED BY WWTP MANUFACTURER. FINAL SLAB DIMENSIONS SHALL BE DETERMINED IN THE FIELD BASED ON OFFETS SHOWN ABOVE.
8. FOR ASSUMED GEOTECHNICAL PARAMETERS, WHICH THE CONTRACTOR SHALL VERIFY, AND SUBGRADE PREPARATION REQUIREMENTS, SEE SHEET U–54.
9. FOR GENERAL CONCRETE REQUIREMENTS, SEE SHEET SHEET U–54. FOR STANDARD REINFORCEMENT BENDING DETAILS, SEE SHEET S–01.

UNLESS OTHERWISE NOTED, LINEAR DIMENSIONS SHOWN ARE IN MILLIMETERS.

NOTE: A3 SIZE REDUCED TO HALF SCALE.

BID DOCUMENT SUBMITTAL

This project was made possible by the United States Agency for International Development and the generous support of the American People through USAID Global Architecture and Engineering IQC Contracts.

SYMB	SUBMITTAL/REVISION DESCRIPTION	DATE	APR
B	BID DOCUMENT SUBMITTAL	09/26/10	BRG
A	95% DESIGN SUBMITTAL	08/19/10	BRG

DESIGNED BY: FS
DATE: 09–26–10
DRAWN BY: EWK
SUBMITTED BY: TETRA TECH
CHECKED BY: BRG
CAD FILE NAME: LT0006–U–72

USAID FROM THE AMERICAN PEOPLE

A E S P

USAID – OIEE
SARDAR GIRLS HIGH SCHOOL
KABUL, AFGHANISTAN

WASTEWATER TREATMENT PLANT LAYOUT

SHEET REFERENCE NUMBER:
LT0006
U–72

Z:\127–1298–10001\Work Orders\WO–LT\WO–LT–0006 SGHS Utility Design\CAD\Conceptual\Civil\WOLT06–U–70, 71, 72.dwg 9/25/2010 11:16:13 AM Koethe, Eric

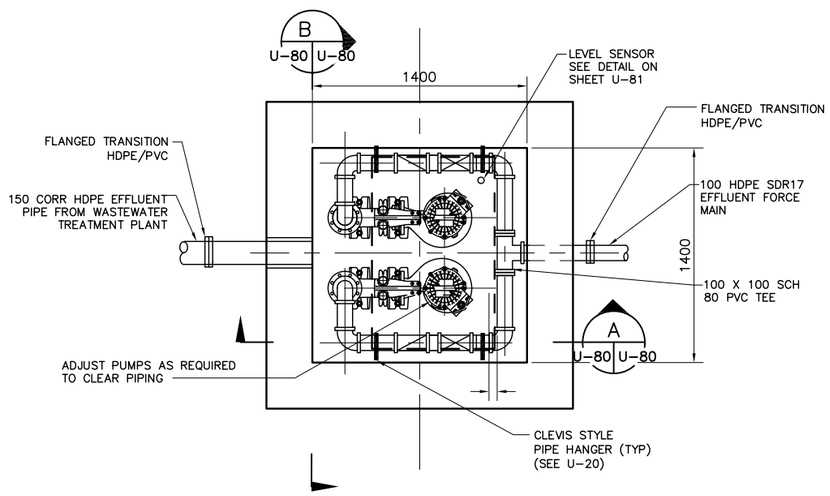

SANITARY PUMP STATION PLAN
1:20

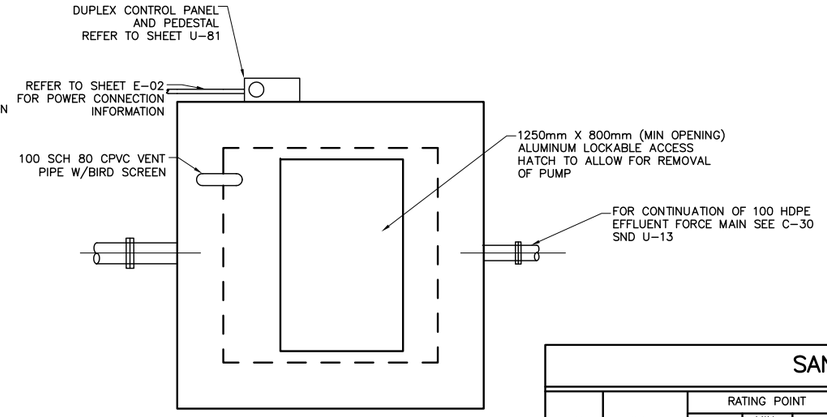

TOP SLAB PLAN
1:20

SANITARY PUMP SCHEDULE

NO. REQ.D	TYPE	RATING POINT			MIN. DISCH SIZE	TYPE SEAL	MOTOR						DRIVE TYPE
		CAP. l/s (GPM)	MIN. HEAD m (FT.)	MIN. EFF.			VOLTAGE	PHASE	WIRE	HZ	HP	ENCL	
2	SEWAGE	7 (110)	8 (26.3)	50%	80mm	TANDEM MECH.	380	3	3	50	4	X PROOF	DIRECT

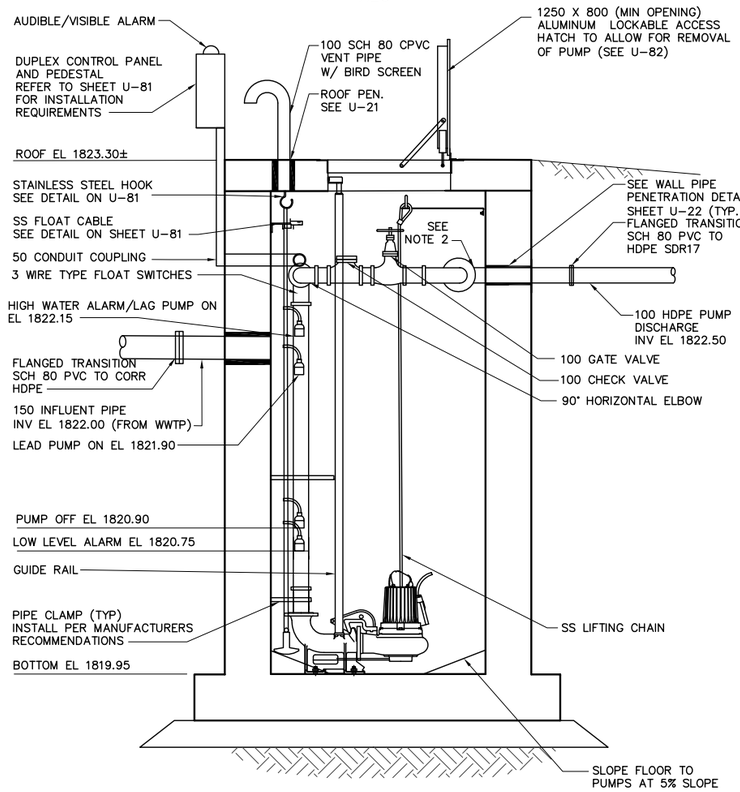

SECTION A
1:20
U-80 U-80

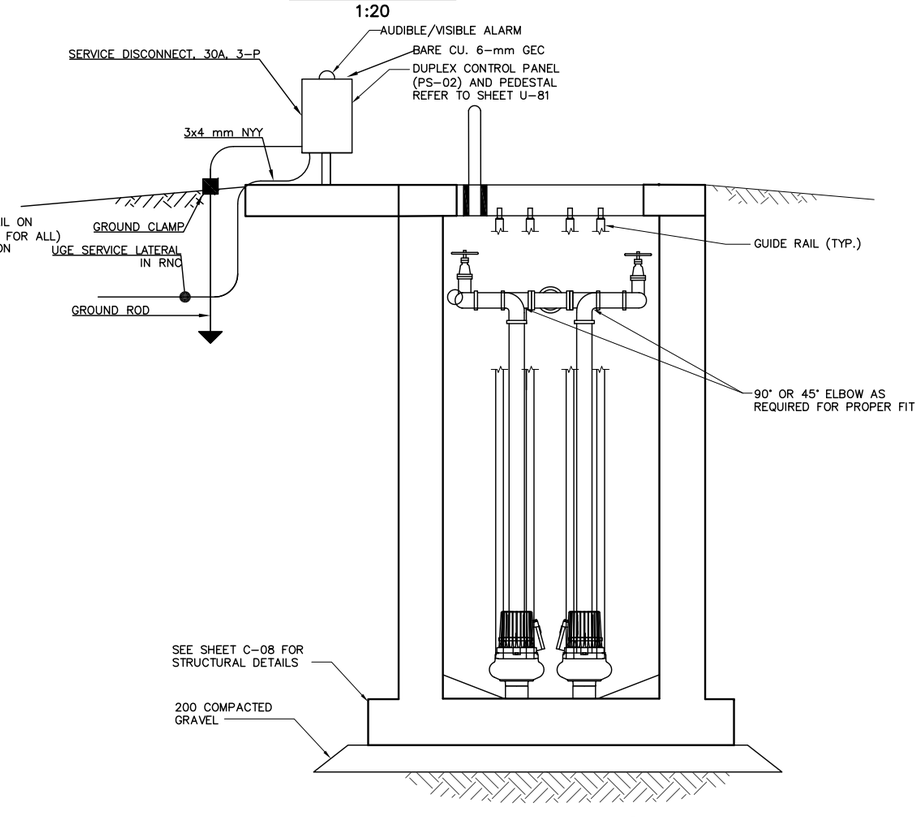

SECTION B
1:20
U-80 U-80

NOTE:

1. SEE SHEET U-82 FOR STRUCTURAL DETAILS
2. ALL PIPES, VALVES, AND FITTINGS INSIDE STATION TO BE SCH. 80 PVC SOLVENT WELD

UNLESS OTHERWISE NOTED, LINEAR DIMENSIONS SHOWN ARE IN MILLIMETERS.

NOTE: A3 SIZE REDUCED TO HALF SCALE.

BID DOCUMENT SUBMITTAL

This project was made possible by the United States Agency for International Development and the generous support of the American People through USAID Global Architecture and Engineering IQC Contracts.

SYMB	SUBMITTAL/REVISION DESCRIPTION	DATE	APR
B	BID DOCUMENT SUBMITTAL	09/26/10	BRG
A	95% DESIGN SUBMITTAL	08/19/10	BRG

DESIGNED BY: BRG
DRAWN BY: EWK
CHECKED BY: DL
DATE: 09-26-10
SUBMITTED BY: TETRA TECH
CAD FILE NAME: LT0006-U-80

USAID FROM THE AMERICAN PEOPLE

A E S P

USAID – OIEE
SARDAR GIRLS HIGH SCHOOL
KABUL, AFGHANISTAN

EFFLUENT PUMP STATION

SHEET REFERENCE NUMBER:
LT0006
U-80

Z:\127-1298-10001\Work Orders\WO-LT\WO-LT-0006 SGHS Utility Design\CAD\Conceptual\Civil\WOLT06-U-80, 81, 82.dwg 9/25/2010 11:24:37 AM Koethe, Eric

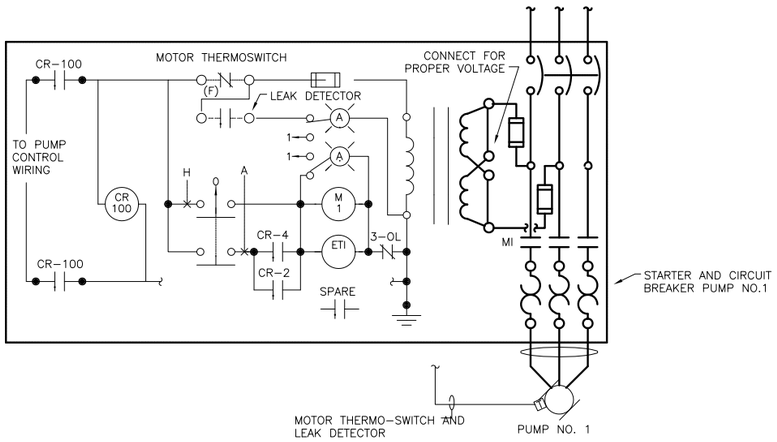

POWER WIRING DIAGRAM

PUMP NO. 1

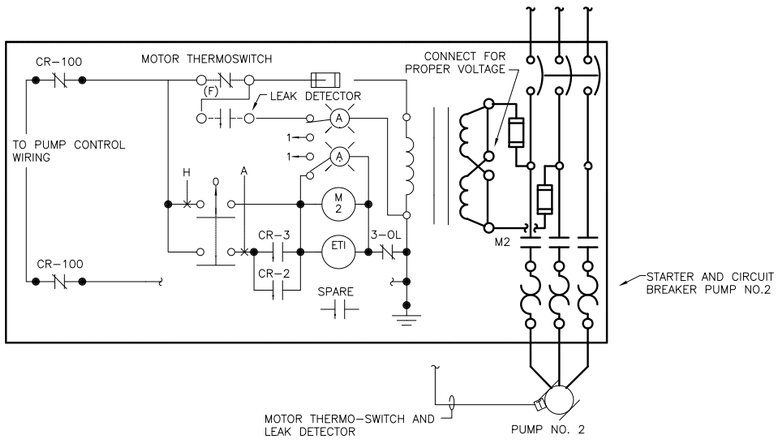

POWER WIRING DIAGRAM

PUMP NO. 2

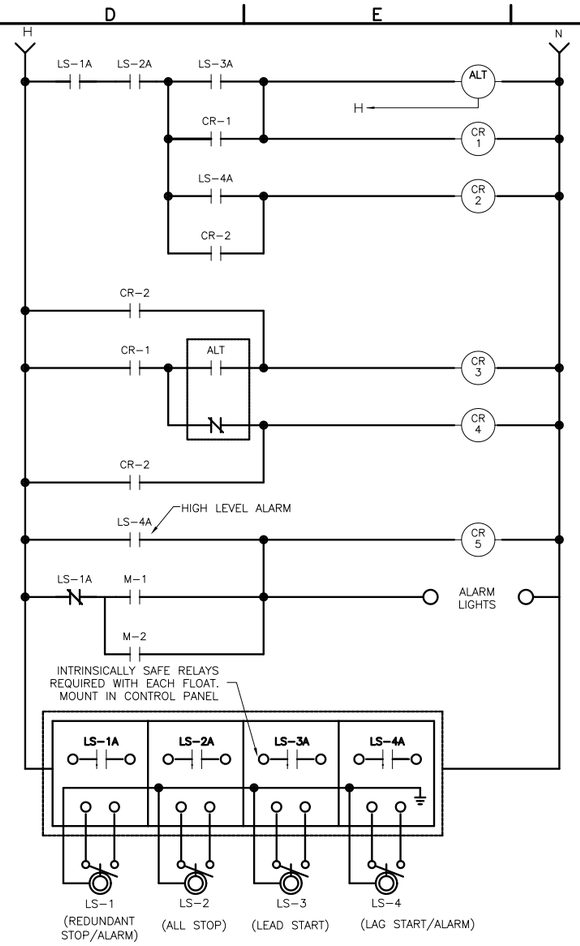

PUMP CONTROL WIRING

(BY STATION MANUFACTURER)

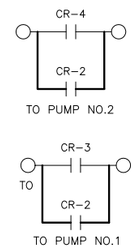

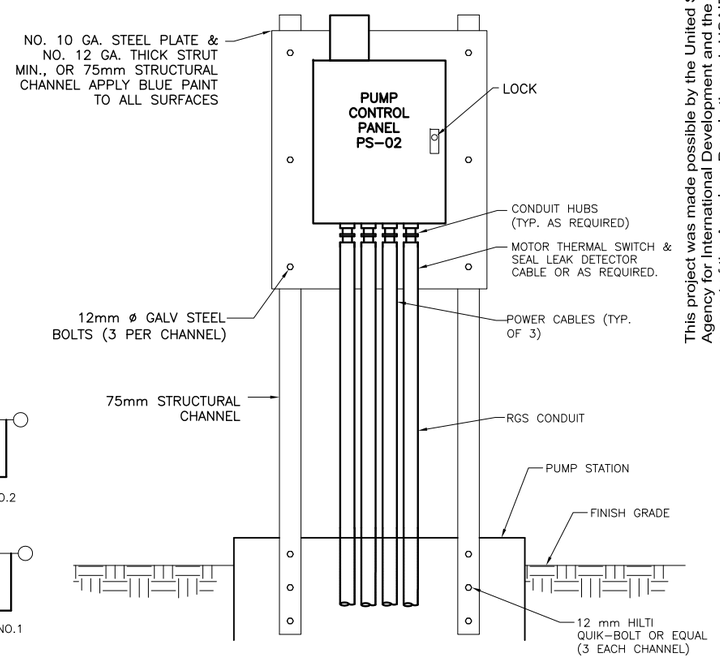

RACK MOUNTED EQUIPMENT DETAIL

N.T.S.

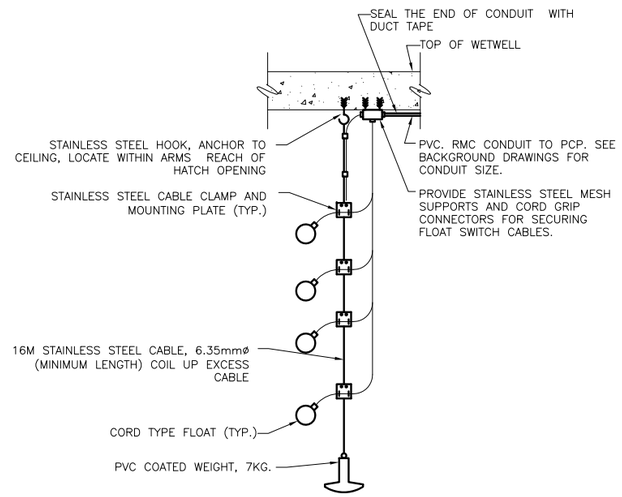

SUBMERSIBLE LEVEL SENSOR DETAIL

N.T.S.

UNLESS OTHERWISE NOTED, LINEAR DIMENSIONS SHOWN ARE IN MILLIMETERS.

NOTE: A3 SIZE REDUCED TO HALF SCALE.

BID DOCUMENT SUBMITTAL

SYMB	SUBMITTAL/REVISION DESCRIPTION	DATE	APR
B	BID DOCUMENT SUBMITTAL	09/26/10	BRG
A	95% DESIGN SUBMITTAL	08/19/10	BRG

This project was made possible by the United States Agency for International Development and the generous support of the American People through USAID Global Architecture and Engineering IQC Contracts.

DESIGNED BY: BRG
DATE: 09-26-10
DRAWN BY: EWK
SUBMITTED BY: TETRA TECH
CHECKED BY: DL
CAD FILE NAME: LT0006-U-81

USAID FROM THE AMERICAN PEOPLE

A E S P

USAID – OIEE
SARDAR GIRLS HIGH SCHOOL
KABUL, AFGHANISTAN

EFFLUENT PUMP STATION
CONTROL PANEL DIAGRAM

SHEET REFERENCE NUMBER:
LT0006
U-81

Z:\127-1298-10001\Work Orders\WO-LT\WO-LT-0006 SGHS Utility Design\CAD\Conceptual\Civil\WOLT06-U-80, 81, 82.dwg 9/25/2010 11:26:41 AM Koethe, Eric

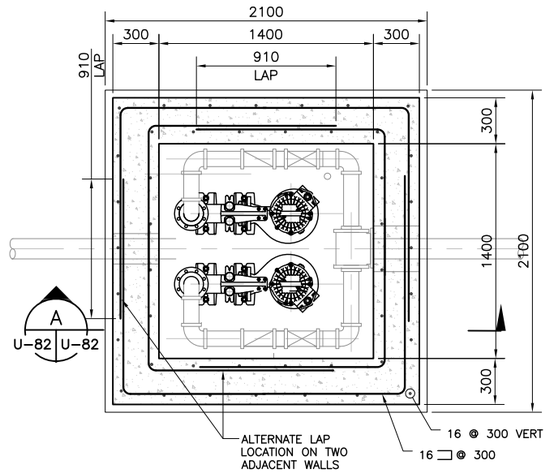

SANITARY PUMP STATION PLAN
1:20

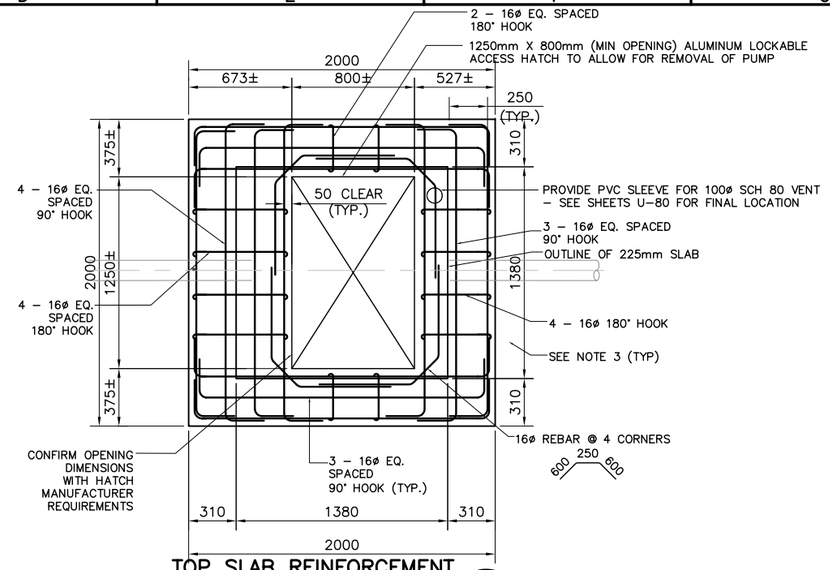

TOP SLAB REINFORCEMENT PLAN
1:20

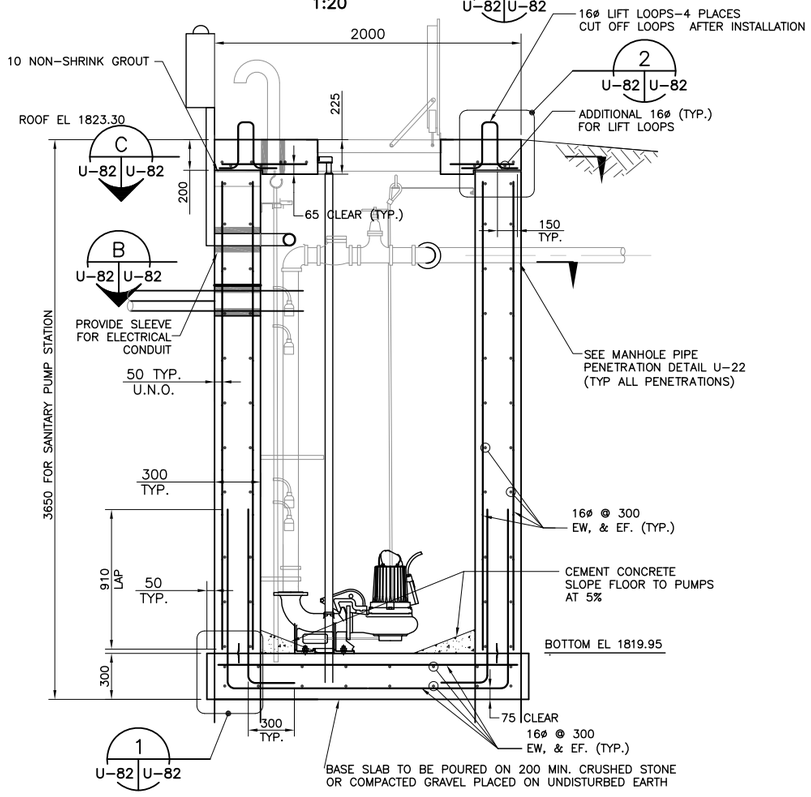

SECTION
1:20

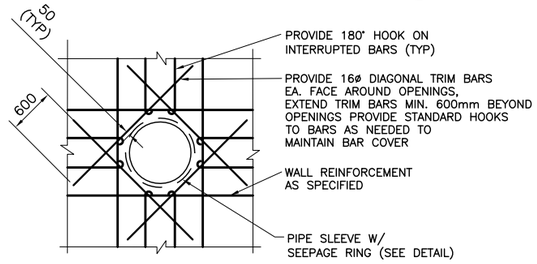

NOTE: PROVIDE ADDITIONAL REINFORCING EQUAL TO BARS INTERRUPTED, 1/2 EACH SIDE, ADDITIONAL BARS TO BE IN SAME PLANE.

REINFORCING AROUND WALL PENETRATION
N.T.S.

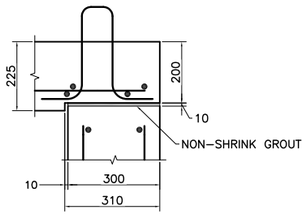

DETAIL
1:10

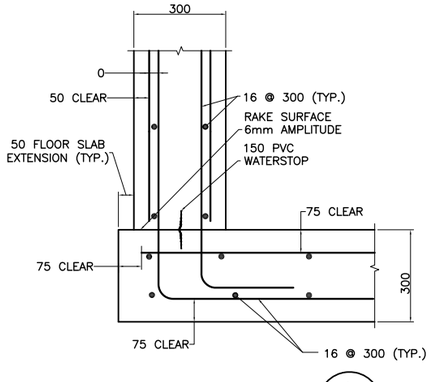

DETAIL
1:10

UNLESS OTHERWISE NOTED, LINEAR DIMENSIONS SHOWN ARE IN MILLIMETERS.

NOTE: A3 SIZE REDUCED TO HALF SCALE.

BID DOCUMENT SUBMITTAL

This project was made possible by the United States Agency for International Development and the generous support of the American People through USAID Global Architecture and Engineering IQC Contracts.

SYMB	SUBMITTAL/REVISION DESCRIPTION	DATE	APR
B	BID DOCUMENT SUBMITTAL	09/26/10	BRG
A	95% DESIGN SUBMITTAL	08/19/10	BRG

DESIGNED BY: BRG
DATE: 09-26-10
DRAWN BY: EWK
SUBMITTED BY: TETRA TECH
CHECKED BY: DL
CAD FILE NAME: LT0006-U-82

USAID FROM THE AMERICAN PEOPLE

A E S P

USAID – OIEE
SARDAR GIRLS HIGH SCHOOL
KABUL, AFGHANISTAN

EFFLUENT PUMP STATION DETAILS

SHEET REFERENCE NUMBER:
LT0006
U-82

Z:\127-1298-10001\Work Orders\WO-LT\WO-LT-0006 SGHS Utility Design\CAD\Conceptual\Civil\WOLT06-U-80, 81, 82.dwg 9/25/2010 11:29:03 AM Koethe, Eric

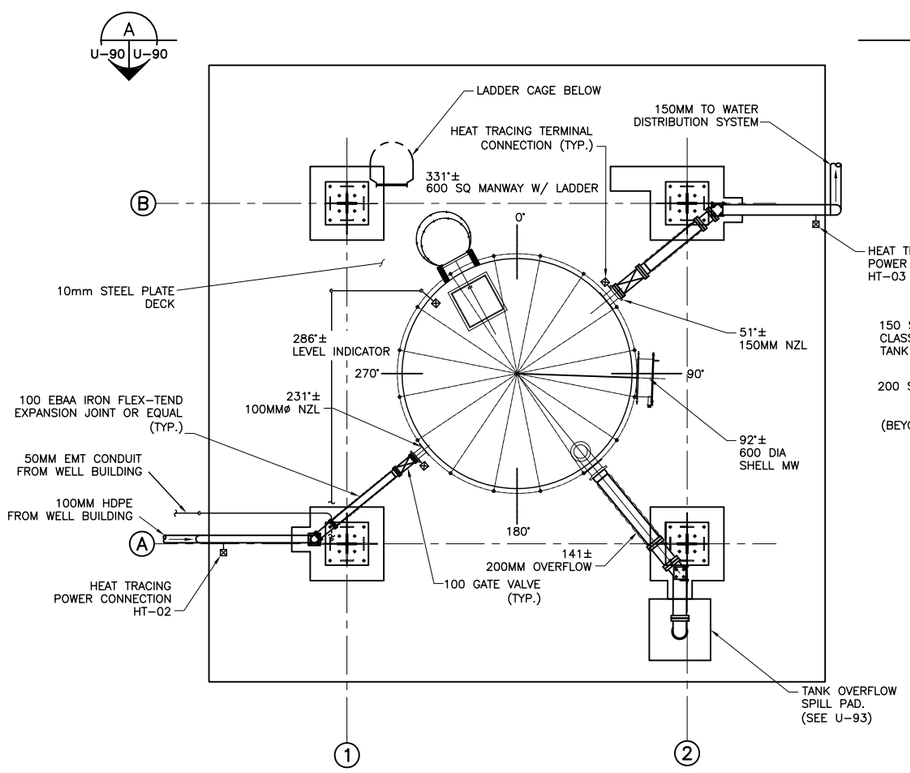

WATER TANK PLAN
SCALE 1:50

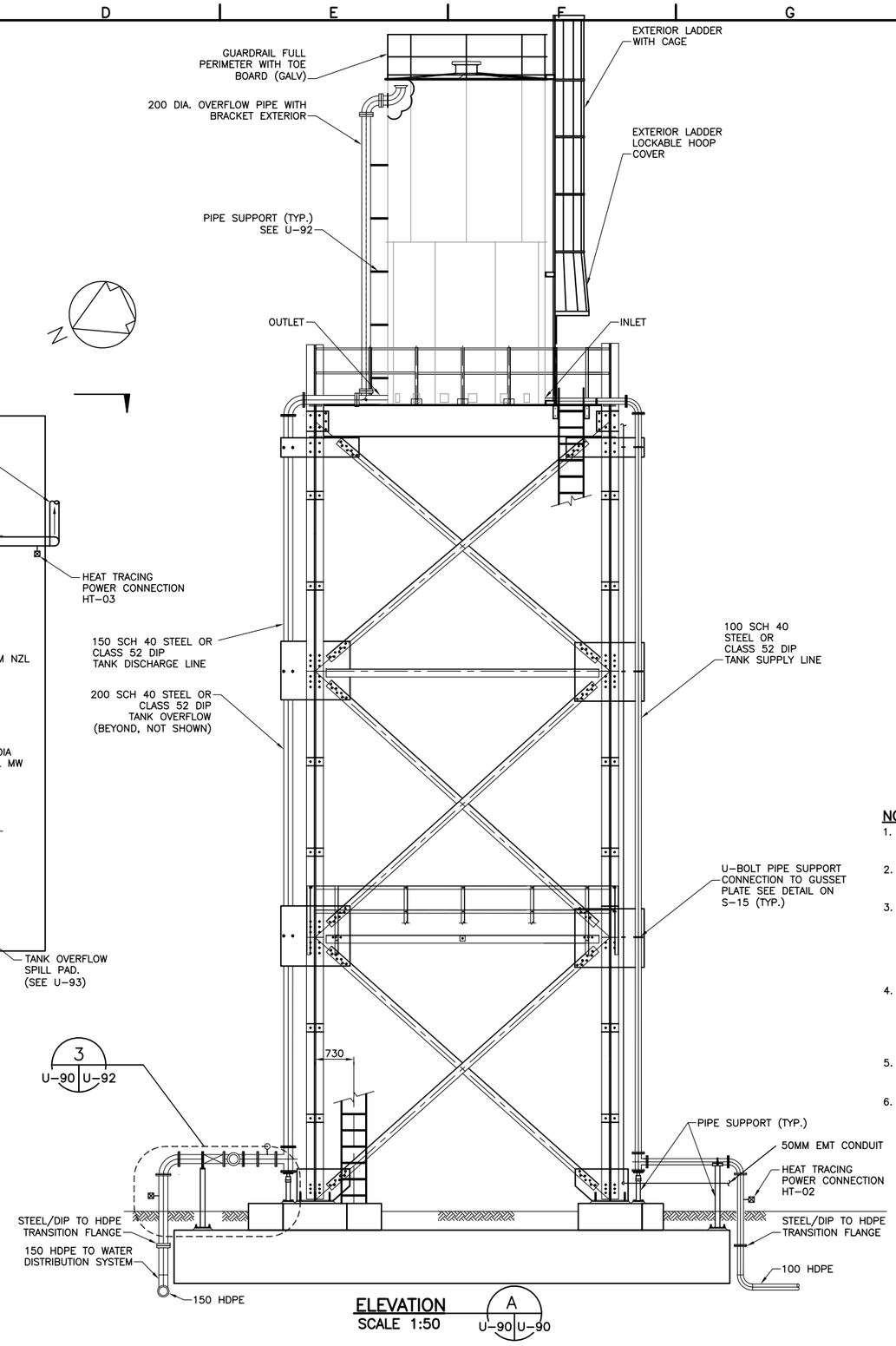

ELEVATION
SCALE 1:50

UNLESS OTHERWISE NOTED, LINEAR DIMENSIONS SHOWN ARE IN MILLIMETERS.

NOTES:

1. INLET, OUTLET AND OVERFLOW PIPE AND FITTINGS ARE TO BE FLANGED.
2. ALL EXPOSED STEEL PIPE OR DUCTILE IRON PIPE TO BE PROTECTED WITH PAINT. FINISH TO BE BLUE.
3. ALL ABOVE GROUND TANK INLET AND OUTLET PIPES TO BE INSULATED WITH FOAMED ELASTOMER (ASTM C534) OR ANY OTHER EQUIVALENT INSULATION MATERIAL. THE MINIMUM INSULATION THICKNESS SHALL BE 25mm. A 0.6mm ALUMINUM JACKET SHALL BE PROVIDED OVER THE INSULATION.
4. ALL ABOVE GROUND TANK INLET AND OUTLET PIPES AND VALVES TO BE TRACED WITH SELF-REGULATING HEATING CABLE SYSTEM. HEAT TRACING CABLE SHALL BE TYCO 5XTV2 OR EQUAL WITH MINIMUM HEAT OUTPUT OF 12.5 WATT/M.
5. HEAT TRACING SYSTEM SHALL BE INSTALLED PER MANUFACTURER'S RECOMMENDATION.
6. PIPE INSULATION PROTECTION SADDLES SHALL BE PROVIDED AT THE SUPPORTS.

1 0 1 2 3 4
1:50
NOTE: A3 SIZE REDUCED TO HALF SCALE.

BID DOCUMENT SUBMITTAL

This project was made possible by the United States Agency for International Development and the generous support of the American People through USAID Global Architecture and Engineering IQC Contracts.

SYMB	SUBMITTAL/REVISION DESCRIPTION	DATE	APR
B	BID DOCUMENT SUBMITTAL	09/26/10	BRG
A	95% DESIGN SUBMITTAL	08/19/10	BRG

DESIGNED BY: NJB
DATE: 09-26-10
DRAWN BY: GPV
SUBMITTED BY: TETRA TECH
CHECKED BY: BRG
CAD FILE NAME: WOLT06-U-90

USAID FROM THE AMERICAN PEOPLE

A E S P

USAID – OIEE
SARDAR GIRLS HIGH SCHOOL
KABUL, AFGHANISTAN
WATER TANK
PLAN AND ELEVATION

SHEET REFERENCE NUMBER:
LT0006
U-90

Z:\127-1298-10001\Work Orders\WO-LT\WO-LT-0006 SGHS Utility Design\CAD\Conceptual\Civil\WOLT06-U-90.dwg 9/25/2010 4:08:21 PM Koethe, Eric

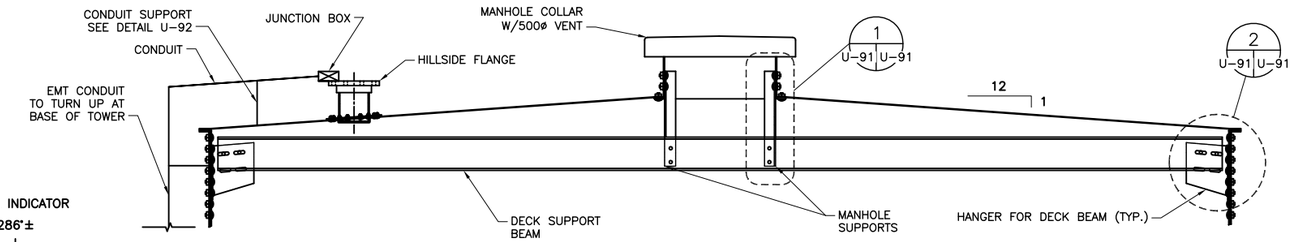

DECK STRUCTURE DETAIL
N.T.S.

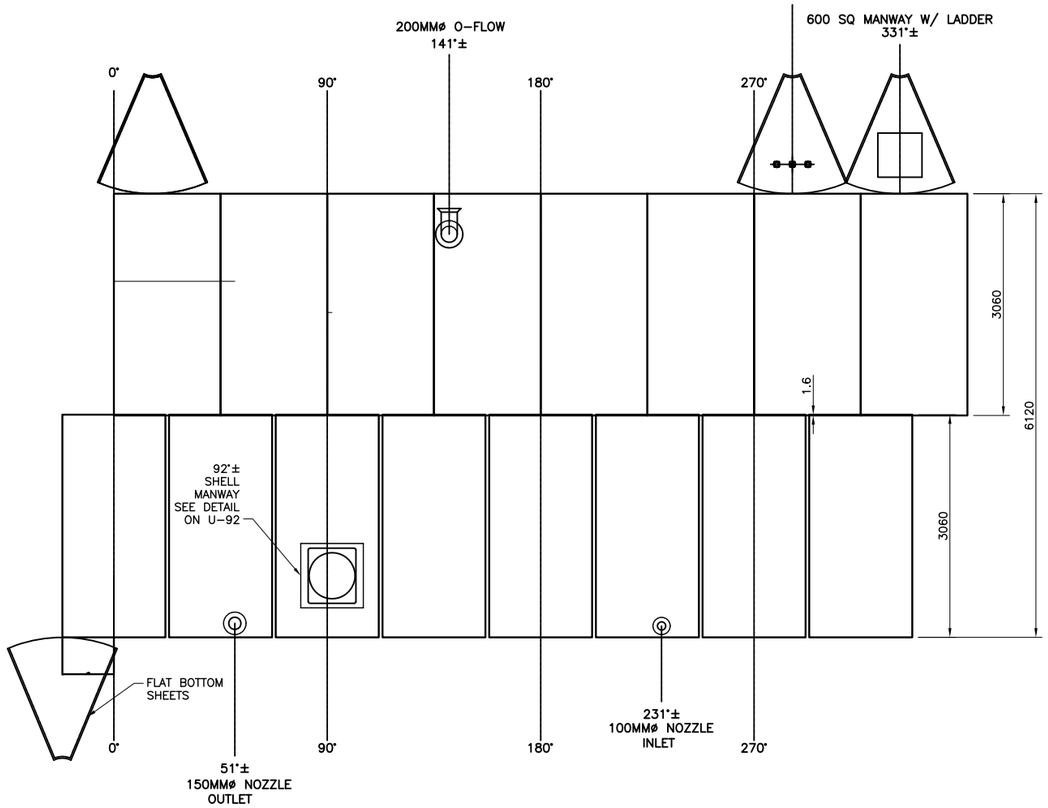

TANK STRETCH-OUT
N.T.S.

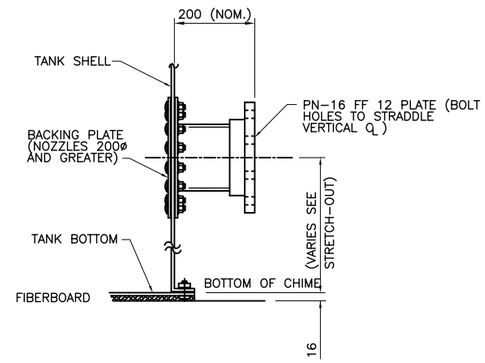

TYPICAL EXTERIOR NOZZLE INSTALLATION DETAIL
N.T.S.

NOTE:
ALL NOZZLES ARE RADIAL UNLESS NOTED AS PARALLEL

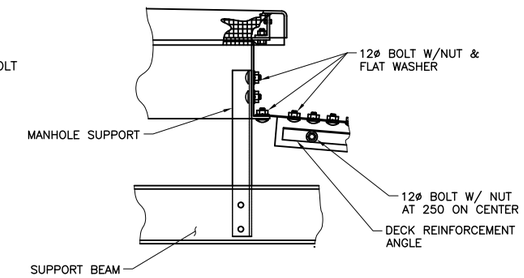

VENT SUPPORT ANGLE DETAIL
N.T.S.

1 U-91 U-91

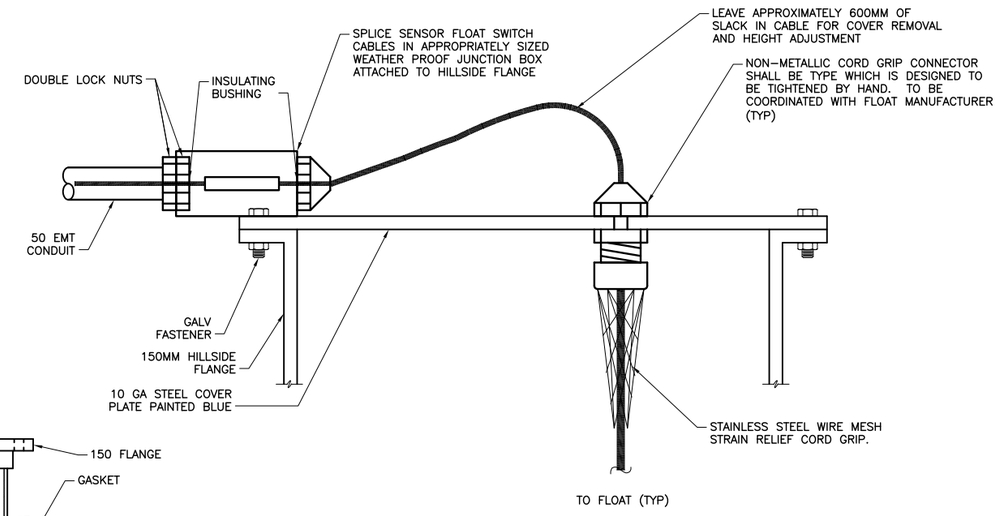

NOTES:

1. COORDINATE MOUNTING REQUIREMENTS WITH MANUFACTURERS RECOMMENDATIONS.
2. INSTALL SPLICE KIT RATED TO IP56

HILLSIDE FLANGE PLATE DETAIL
N.T.S.

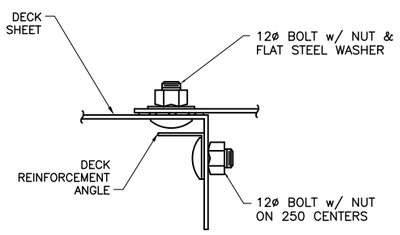

DECK SEAM DETAIL
N.T.S.

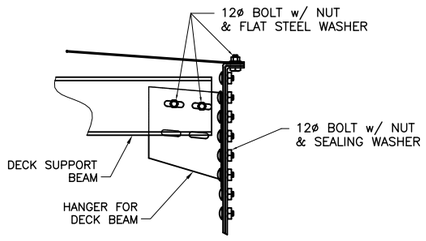

DECK BEAM WITH HANGER DETAIL
N.T.S.

2 U-91 U-91

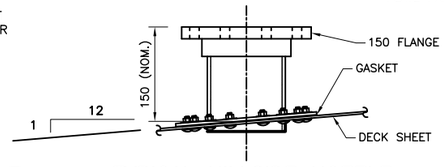

TYPICAL HILLSIDE NOZZLE INSTALLATION DETAIL
N.T.S.

UNLESS OTHERWISE NOTED, LINEAR DIMENSIONS SHOWN ARE IN MILLIMETERS.

NOTE: A3 SIZE REDUCED TO HALF SCALE.

BID DOCUMENT SUBMITTAL

SYMB	SUBMITTAL/REVISION DESCRIPTION	DATE	APR
B	BID DOCUMENT SUBMITTAL	09/26/10	BRG
A	95% DESIGN SUBMITTAL	08/19/10	BRG

This project was made possible by the United States Agency for International Development and the generous support of the American People through USAID Global Architecture and Engineering IQC Contracts.

DESIGNED BY: NJB
DATE: 09-26-10
DRAWN BY: RLT
SUBMITTED BY: TETRA TECH
CHECKED BY: BRG
CAD FILE NAME: WOLT06-U-91

USAID FROM THE AMERICAN PEOPLE

A E S P

USAID – OIEE
SARDAR GIRLS HIGH SCHOOL
KABUL, AFGHANISTAN
WATER TANK
DETAILS 1 OF 2

SHEET REFERENCE NUMBER:
LT0006
U-91

Z:\127-1298-10001\Work Orders\WO-LT\WO-LT-0006 SGHS Utility Design\CAD\Conceptual\Civil\WOLT06-U-91.dwg 9/25/2010 11:40:07 AM Koethe, Eric

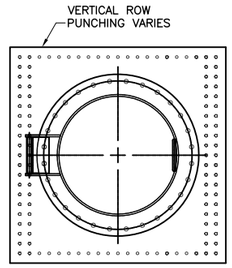

ELEVATION

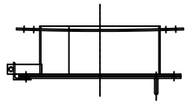

PLAN

TYPICAL SHELL MANWAY
N.T.S.

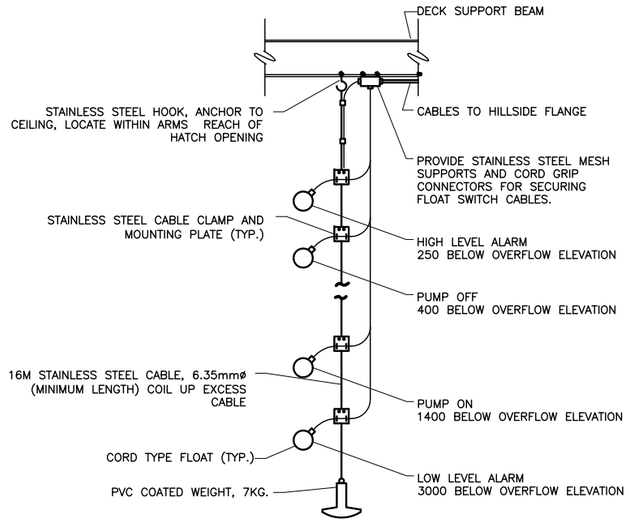

SUBMERSIBLE LEVEL SENSOR DETAIL
N.T.S.

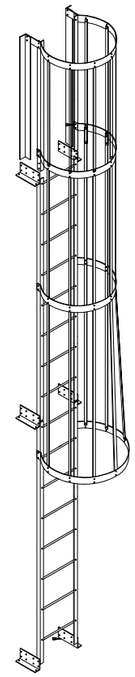

EXTERIOR LADDER
N.T.S.

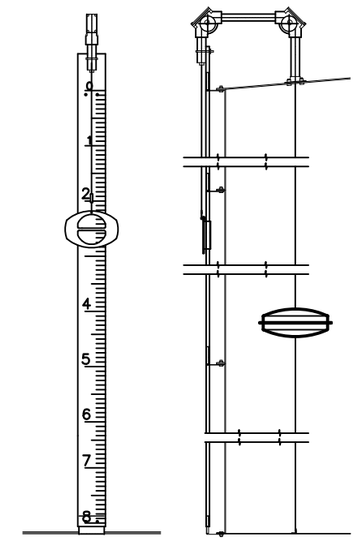

TYP LEVEL INDICATOR
NTS

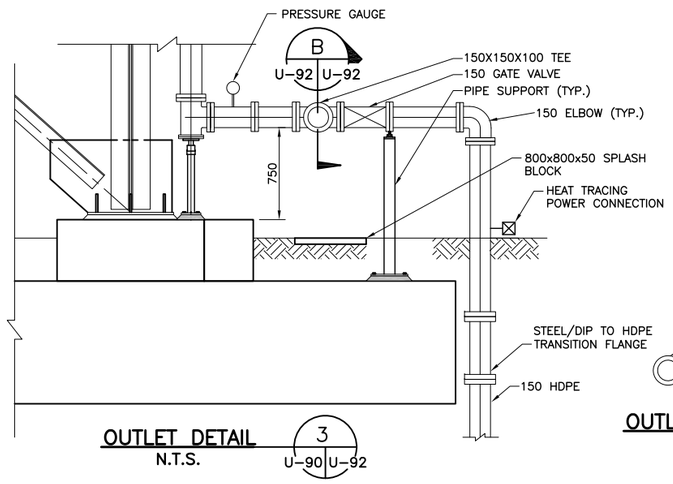

OUTLET DETAIL
N.T.S.

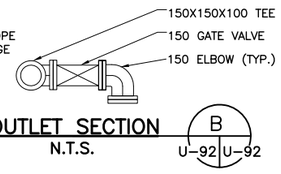

OUTLET SECTION
N.T.S.

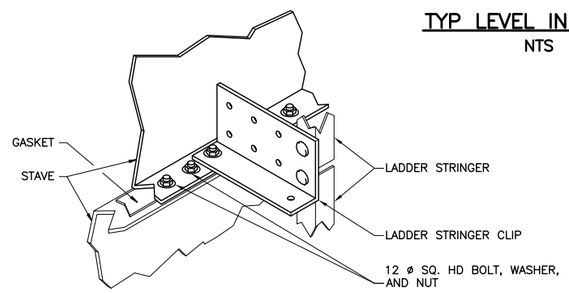

TYP. LADDER STRING CLIP CONNECTION TO STAVE
N.T.S.

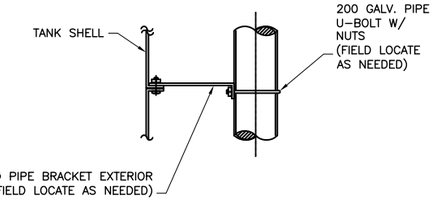

OVERFLOW PIPE SUPPORT BRACKET DETAIL
N.T.S.

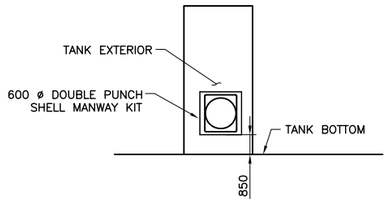

SHELL MANWAY
N.T.S.

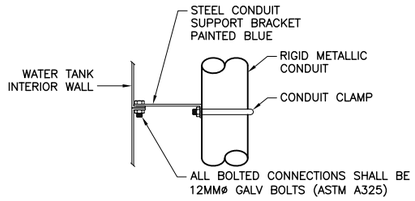

CONDUIT SUPPORT DETAIL
(ROOF CONNECTIONS SIMILAR)
N.T.S.

UNLESS OTHERWISE NOTED, LINEAR DIMENSIONS SHOWN ARE IN MILLIMETERS.

NOTE: A3 SIZE REDUCED TO HALF SCALE.

BID DOCUMENT SUBMITTAL

SYMB	SUBMITTAL/REVISION DESCRIPTION	DATE	APR
B	BID DOCUMENT SUBMITTAL	09/26/10	BRG
A	95% DESIGN SUBMITTAL	08/19/10	BRG

This project was made possible by the United States Agency for International Development and the generous support of the American People through USAID Global Architecture and Engineering IQC Contracts.

DESIGNED BY: NJB
DATE: 09-26-10
DRAWN BY: RLT
SUBMITTED BY: TETRA TECH
CHECKED BY: BRG
CAD FILE NAME: WOLT06-U-92

USAID FROM THE AMERICAN PEOPLE

A E S P

USAID – OIEE
SARDAR GIRLS HIGH SCHOOL
KABUL, AFGHANISTAN
WATER TANK
DETAILS 2 OF 2

SHEET REFERENCE NUMBER:
LT0006
U-92

Z:\127-1298-10001\Work Orders\WO-LT\WO-LT-0006 SGHS Utility Design\CAD\Conceptual\Civil\WOLT06-U-92.dwg 9/25/2010 11:42:28 AM Koethe, Eric

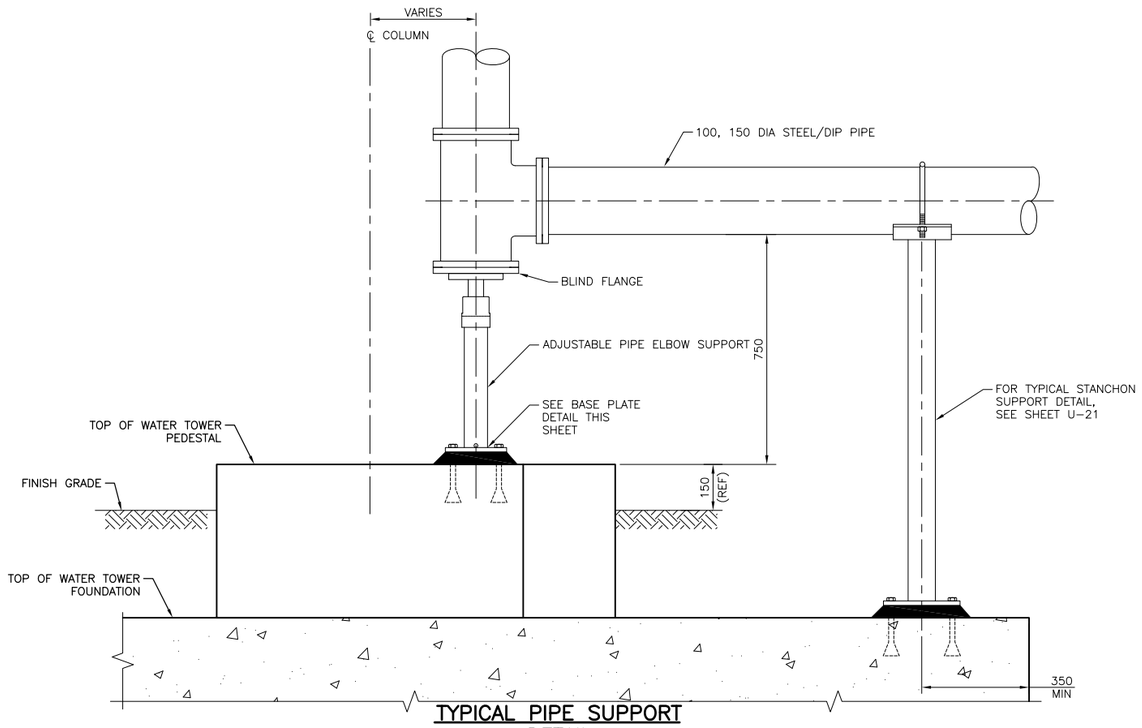

TYPICAL PIPE SUPPORT DETAIL
SCALE 1:10

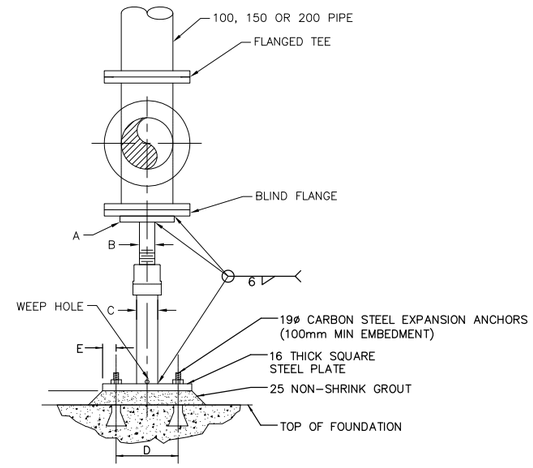

PIPE SIZE	A	B	C	D	E
100	150ø x6	50	75	120	40
150	150ø x6	50	75	120	40
200	175ø x10	75	100	120	40

PIPE SUPPORT AT PIPE DROP
SCALE: N.T.S.

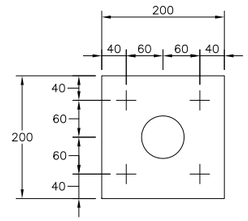

PIPE SUPPORT BASE PLATE DETAIL
SCALE 1:5

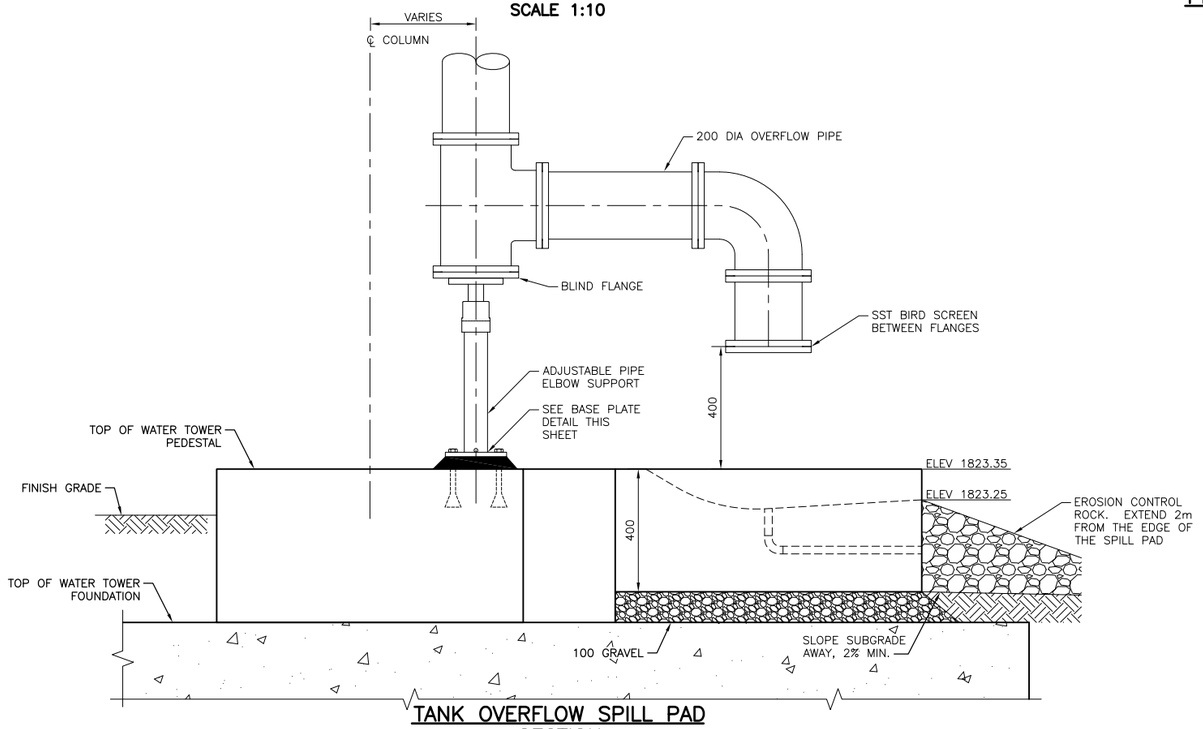

TANK OVERFLOW SPILL PAD SECTION
SCALE 1:10

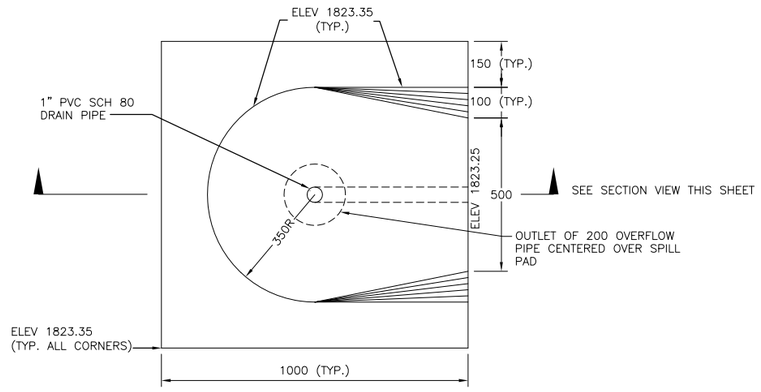

TANK OVERFLOW SPILL PAD PLAN
SCALE 1:10

UNLESS OTHERWISE NOTED, LINEAR DIMENSIONS SHOWN ARE IN MILLIMETERS.

0 .10 .20 .30 .40 .50
1:5
0 .5 1 2 3 4
1:40
NOTE: A3 SIZE REDUCED TO HALF SCALE.

BID DOCUMENT SUBMITTAL

This project was made possible by the United States Agency for International Development and the generous support of the American People through USAID Global Architecture and Engineering IQC Contracts.

SYMB	SUBMITTAL/REVISION DESCRIPTION	DATE	APR
B	BID DOCUMENT SUBMITTAL	09/26/10	BRG
A	95% DESIGN SUBMITTAL	08/19/10	BRG

DESIGNED BY: NJB
DATE: 09-26-10
DRAWN BY: GPV
SUBMITTED BY: TETRA TECH
CHECKED BY: BRG
CAD FILE NAME: WOLT06-U-93

USAID FROM THE AMERICAN PEOPLE

A E S P

USAID – OIEE
SARDAR GIRLS HIGH SCHOOL
KABUL, AFGHANISTAN
PIPE SUPPORT DETAILS

SHEET REFERENCE NUMBER:
LT0006
U-93

Z:\127-1298-10001\Work Orders\WO-LT\WO-LT-0006 SGHS Utility Design\CAD\Conceptual\Civil\WOLT06-U-93.dwg 9/25/2010 11:44:16 AM Koethe, Eric

SYMBOLS

STANDARD REFERENCE BUBBLE

1 — DETAIL NUMBER

A–01 A–02 — SHEET DETAIL IS LOCATED ON; SHEET(S) DETAIL IS CALLED OUT ON

FLOOR PLAN
SCALE 1:100 — DRAWING TITLE AND SCALE

A — A–01 A–02 — BUILDING / WALL SECTION

1 — A–01 A–02 — EXTERIOR ELEVATION

1 — A–01 A–02 — DETAIL

OFFICE 100 — ROOM NAME AND NUMBER

CUT LINE

CENTER LINE

100.00m T.O. — ELEVATION IN RELATION TO BENCHMARK

CMU WALL

A1 — PARTITION TYPE

105 — SINGLE SWING DOOR AND DOOR TAG

DOOR SYMBOL (ELEVATION)
HINGE SIDE

ROOF SYMBOLS

PLUMBING VENT

SCUPPER AND DOWNSPOUT

ABBREVIATIONS

REFER TO ROOM FINISH LEGEND FOR ADDITIONAL ABBREVIATIONS

ADDL	ADDITIONAL
ADH	ADHESIVE
ADJ	ADJACENT
AFF	ABOVE FINISH FLOOR
ALUM	ALUMINUM
AHU	AIR HANDLING UNIT
APPROX	APPROXIMATE (LY)
ARCH	ARCHITECT (URAL)
AVE	AVERAGE
B	BOTTOM
BD	BOARD
BLDG	BUILDING BLOCK
BLK	BLOCKING BLKG
BO	BY OTHERS
BOM	BOTTOM OF MASONRY
BS	BOTH SIDES, BOTTOM OF STAIR
CIP	CAST IN PLACE
CJ	CONTROL JOINT
CL	CENTER LINE
CLKG	CAULKING
CLR	CLEAR (ING) (ANCE)
CMT	CERAMIC MOSAIC TILE
CMU	CONCRETE MASONRY UNIT
COL	COLUMN
COM	COMMUNICATIONS
COMB	COMBINATION
COMP	COMPOSITE
CONC	CONCRETE
CONT	CONTINUOUS
COORD	COORDINATE
CORR	CORRUGATED, CORRIDOR
CTR	CENTER
DET	DETAIL (ED)
DIA	DIAMETER
DIM	DIMENSION
DIST	DISTANCE
DN	DOWN
DR	DOOR
DWG(S)	DRAWING(S)
DS	DOWNSPOUT
DTL	DETAIL
EA	EACH
EJ	EXPANSION JOINT
ELEC	ELECTRIC (AL)
ELEV	ELEVATION
ENC	ENCLOSURE
EQ	EQUAL
EPDM	ETHYLENE PROPYLENE DIENE MONOMER
EW	EACH WAY
EXP	EXPANSION
EXT	EXTERIOR
FE	FIRE EXTINGUISHER
FEC	FIRE EXTINGUISHER CABINET
FF	FINISH FLOOR, FACTORY FINISH
FFE	FINISH FLOOR ELEVATION
FIN	FINISH (ED)
FLR, FL	FLOOR (ING)
FLUOR	FLUORESCENT
FND	FOUNDATION
FP	FIRE PROTECTION
GA	GAUGE
GALV	GALVANIZED
GL	GLASS, GLAZING
GND	GROUND
GWB	GYPSUM WALL BOARD
GYP	GYPSUM
H	HEIGHT
HDW	HARDWARE
HM (D)	HOLLOW METAL (DOOR)
HORZ	HORIZONTAL
HR	HANDRAIL, HOUR
HVAC	HEATING/ VENTILATING/AIR CONDITIONING
HW	HOT WATER
HWG	HARDWARE GROUP
IBC	INTERNATIONAL BUILDING CODE
INCL	INCLUDE (D) (ING)
INS	INSULATE (D) (ION)
INSUL	INSULATION
INT	INTERIOR
JAN	JANITORS CLOSET
JT	JOINT
L	LENGTH, LONG
LAV	LAVATORY
LEV	LEVEL
LG	LENGTH, LONG
M (m)	METER
MM(mm)	MILLIMETER
MAS	MASONRY
MAT	MATERIAL
MAX	MAXIMUM
MDF	MEDIUM DENSITY FIBERBOARD
MECH	MECHANICAL
MFR	MANUFACTURE (R)
MIN	MINIMUM
MIR	MIRROR
MO	MASONRY OPENING
NIC	NOT IN CONTRACT
NFPA	NATIONAL FIRE PROTECTION ASSOCIATION
NTS	NOT TO SCALE
OA	OVERALL
OC	ON CENTER
OPP	OPPOSITE
OPP HD	OPPOSITE HAND
P	PAINT SURFACE(S)
PAR	PARALLEL
PART	PARTITION
PL	PLASTER
PLUMB	PLUMBING
PNL	PANEL
PR	PAIR
PTD	PAINTED, PAPER TOWEL DISPENSER
PVC	POLYVINYL CHLORIDE
QTY	QUANTITY
R	RADIUS
RCP	REFLECTED CEILING PLAN
REF	REFERENCE
RFG	ROOFING
RLG	RAIL (ING)
RM	ROOM
SCHED	SCHEDULE
SHTHG	SHEATHING
SIM	SIMILAR
SK	SINK
SM	SQUARE METER
SOG	SLAB ON GRADE
SP	SPACE (ING) (ES)
SPEC	SPECIFICATION (S)
SQ	SQUARE
SS	STAINLESS STEEL
STD	STANDARD
STL	STEEL
STOR	STORAGE
STRU	STRUCTURAL
SURF	SURFACE
T	TREAD, TOILET ROOM
TO	TOP OF
TB	TOP AND BOTTOM
TBD	TO BE DETERMINED
THK	THICKNESS
TOM	TOP OF MASONRY
TS	TOP OF STAIR
TYP	TYPICAL
UNO	UNLESS NOTED OTHERWISE
V	VENT
VAR	VARIES, VARIABLE
VERT	VERTICAL
VEST	VESTIBULE
VIF	VERIFY IN FIELD
W	WIDTH, WIDE
WC	WATER CLOSET
WD	WOOD
WDW	WINDOW
WP	WORKING POINT
W/	WITH
W/O	WITHOUT

UNLESS OTHERWISE NOTED, LINEAR DIMENSIONS SHOWN ARE IN MILLIMETERS.

NOTE: A3 SIZE REDUCED TO HALF SCALE.

BID DOCUMENT SUBMITTAL

This project was made possible by the United States Agency for International Development and the generous support of the American People through USAID Global Architecture and Engineering IQC Contracts.

SYMB	SUBMITTAL/REVISION DESCRIPTION	DATE	APR
B	BID DOCUMENT SUBMITTAL	09/26/10	BRG
A	95% DESIGN SUBMITTAL	08/19/10	BRG

DESIGNED BY: SL — DATE: 09-26-10
DRAWN BY: SL — SUBMITTED BY: TETRA TECH
CHECKED BY: TH — CAD FILE NAME: WOLT06-A-01

USAID FROM THE AMERICAN PEOPLE

A E S P

USAID – OIEE
SARDAR GIRLS HIGH SCHOOL
KABUL, AFGHANISTAN
WELL BUILDING
SYMBOLS AND ABBREVIATIONS

SHEET REFERENCE NUMBER:
LT0006
A–01

Z:\127-1298-10001\Work Orders\WO-LT\WO-LT-0006 SGHS Utility Design\CAD\Conceptual\Architectural\WOLT06-A-01.dwg 9/25/2010 12:01:31 PM Koethe, Eric

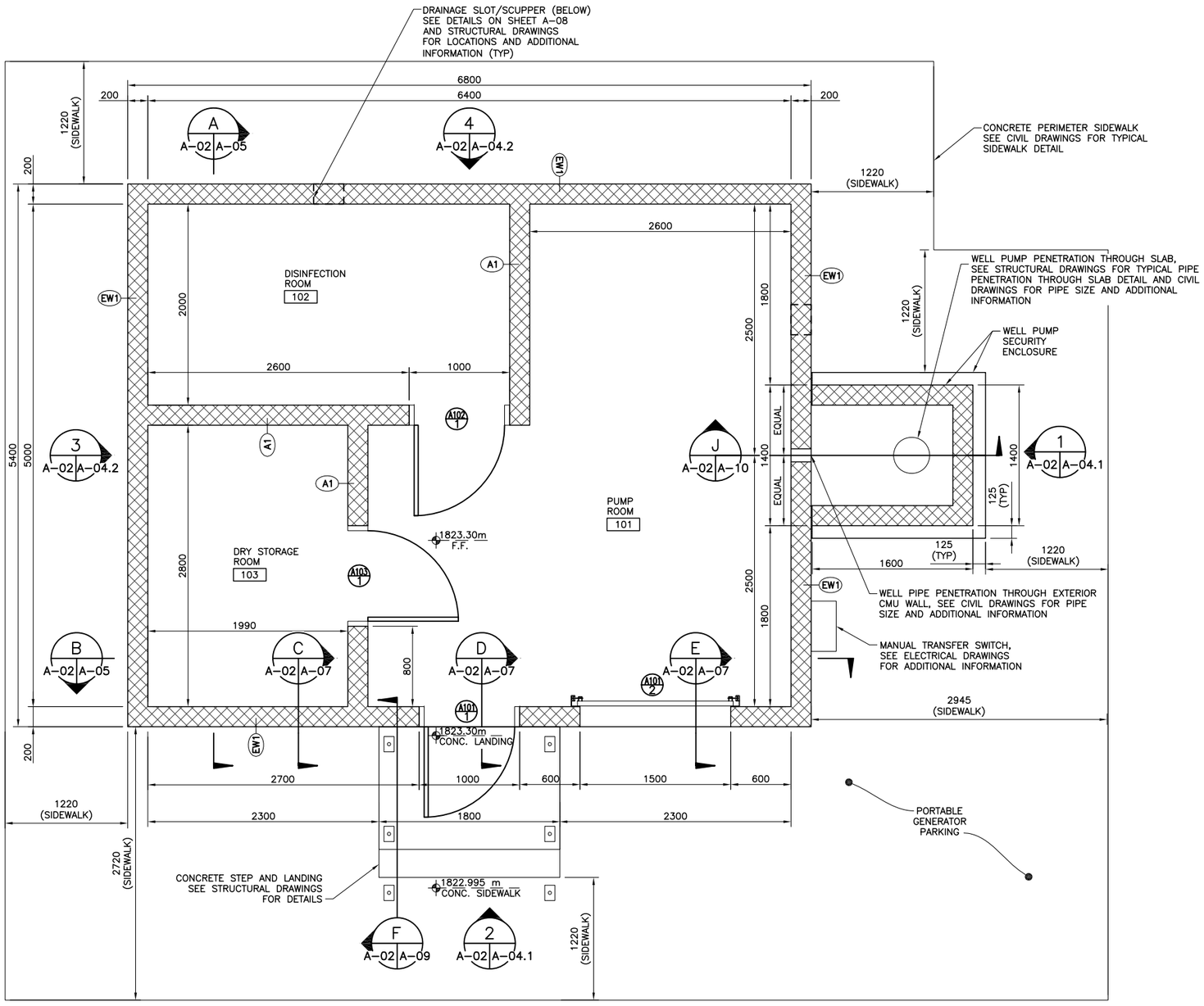

NOTE:
CONCRETE PERIMETER SIDEWALK SHALL SLOPE AWAY FROM BUILDING

FLOOR PLAN
SCALE 1:25

BUILDING CODE AND CONSTRUCTION DATA

THE FOLLOWING ANALYSIS IS PER IBC 2009:

TOTAL FLOOR AREA GROSS:	36.72 SM
NUMBER OF FLOORS:	1 STORY
STRUCTURAL SYSTEM:	NORMAL WEIGHT FULLY GROUTED CMU, STEEL FRAME ROOF
FLOOR CONSTRUCTION:	FIRST FLOOR – SLAB ON GRADE
CONSTRUCTION CLASS:	II–B, NON–COMBUSTABLE, NON–PROTECTED
USE GROUP:	U, UTILITY AND MISCULLANEOUS
SPRINKLERS:	NO

HEIGHT AND AREA LIMITATIONS

ALLOWABLE HEIGHT:	2 STORIES
ACTUAL HEIGHT:	1 STORY
ALLOWABLE AREA:	789 SM
INCREASE DUE TO SPRINKLERS:	0
ACTUAL AREA:	36.72 SM

FIRE RESISTANCE RATINGS

STRUCTURAL FRAMING:	0 HOURS
BEARING WALLS:	0 HOURS
NON BEARING WALLS (INT/EXT):	0 HOURS
ROOF CONSTRUCTION:	0 HOURS
STORAGE ROOMS > 9.3 SM, VERTICAL EXIT ENCLOSURES, MECHANICAL/ELECTRICAL ROOMS:	1 HOURS
ALLOWABLE OCCUPANT LOAD:	1 OCCUPANT

EGRESS

EXIT ACCESS MAX TRAVEL DIST.:	23 M
EGRESS WIDTH PER OCCUPANT	
DOORS, CORRIDORS:	5.08 MM
STAIRS:	7.62 MM
NUMBER OF EXITS REQUIRED:	1

UNLESS OTHERWISE NOTED, LINEAR DIMENSIONS SHOWN ARE IN MILLIMETERS.

1 .50 0 1 1.5
1:25
NOTE: A3 SIZE REDUCED TO HALF SCALE.

BID DOCUMENT SUBMITTAL

SYMB	SUBMITTAL/REVISION DESCRIPTION	DATE	APR
B	BID DOCUMENT SUBMITTAL	09/26/10	BRG
A	95% DESIGN SUBMITTAL	08/19/10	BRG

This project was made possible by the United States Agency for International Development and the generous support of the American People through USAID Global Architecture and Engineering IQC Contracts.

DESIGNED BY: SL
DATE: 09-26-10
DRAWN BY: SL
SUBMITTED BY: TETRA TECH
CHECKED BY: TH
CAD FILE NAME: WOLT06-A-02

USAID FROM THE AMERICAN PEOPLE

A E S P

USAID – OIEE
SARDAR GIRLS HIGH SCHOOL
KABUL, AFGHANISTAN
WELL BUILDING
FLOOR PLAN

SHEET REFERENCE NUMBER:
LT0006
A–02

Z:\127-1298-10001\Work Orders\WO-LT\WO-LT-0006 SGHS Utility Design\CAD\Conceptual\Architectural\WOLT06-A-02.dwg 9/25/2010 12:58:19 PM Koethe, Eric

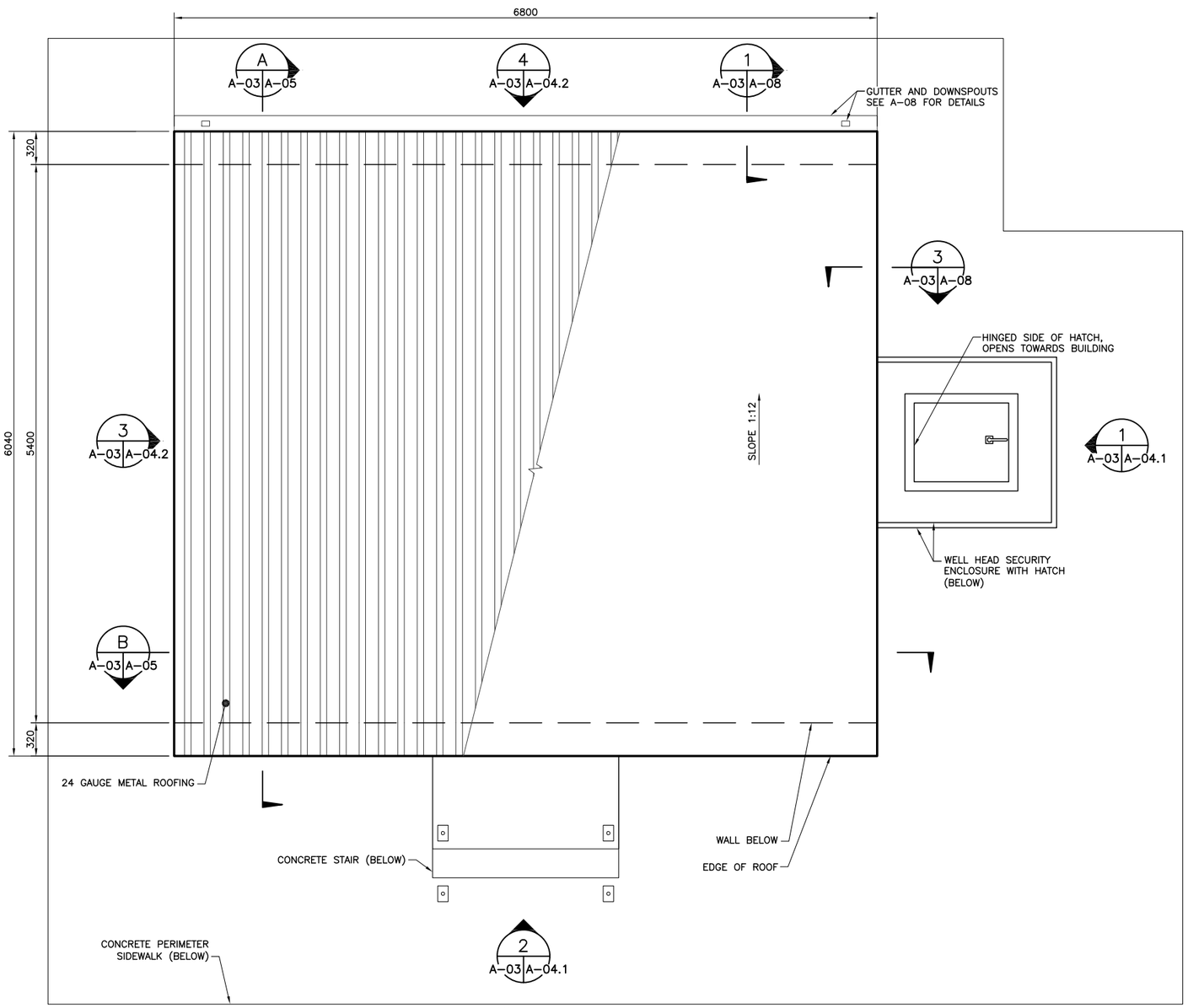

NOTE:
CONCRETE PERIMETER SIDEWALK SHALL SLOPE AWAY FROM BUILDING

ROOF PLAN
SCALE 1:25

UNLESS OTHERWISE NOTED, LINEAR DIMENSIONS SHOWN ARE IN MILLIMETERS.

1 .50 0 1 1.5
1:25
NOTE: A3 SIZE REDUCED TO HALF SCALE.

N

BID DOCUMENT SUBMITTAL

SYMB	SUBMITTAL/REVISION DESCRIPTION	DATE	APR
B	BID DOCUMENT SUBMITTAL	09/26/10	BRG
A	95% DESIGN SUBMITTAL	08/19/10	BRG

This project was made possible by the United States Agency for International Development and the generous support of the American People through USAID Global Architecture and Engineering IQC Contracts.

DESIGNED BY: SL
DATE: 09-26-10
DRAWN BY: SL
SUBMITTED BY: TETRA TECH
CHECKED BY: TH
CAD FILE NAME: WOLT06-A-03

USAID FROM THE AMERICAN PEOPLE

A E S P

USAID – OIEE
SARDAR GIRLS HIGH SCHOOL
KABUL, AFGHANISTAN
WELL BUILDING
ROOF PLAN

SHEET REFERENCE NUMBER:
LT0006 A–03

Z:\127-1298-10001\Work Orders\WO-LT\WO-LT-0006 SGHS Utility Design\CAD\Conceptual\Architectural\WOLT06-A-03.dwg 9/25/2010 1:01:32 PM Koethe, Eric

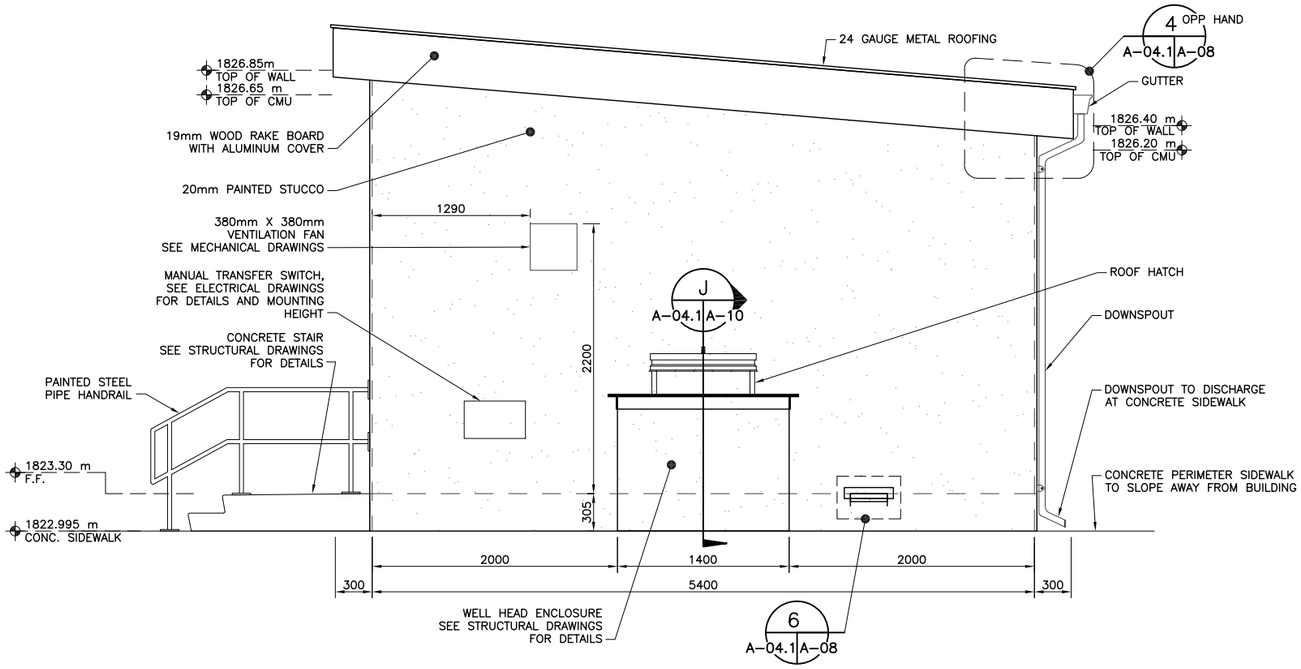

SIDE ELEVATION 1 A-02,A-03 A-04.1
SCALE 1:25

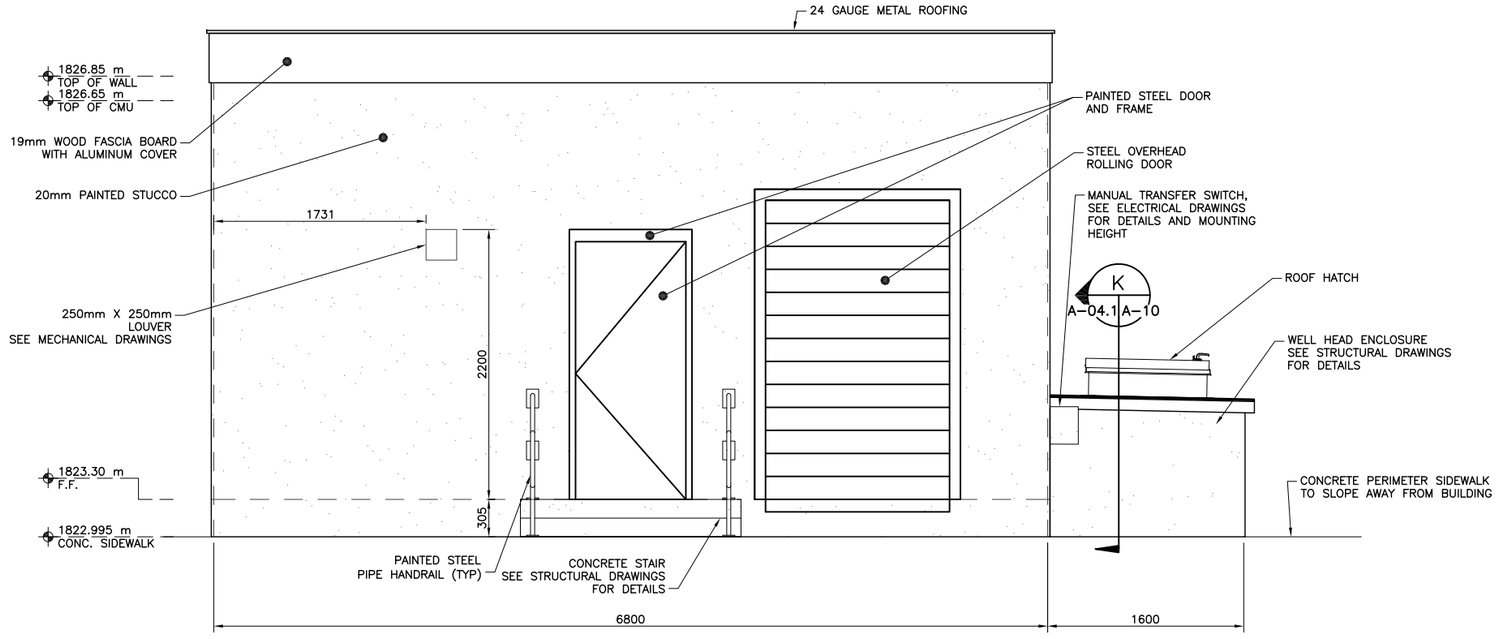

FRONT ELEVATION 2 A-02,A-03 A-04.1
SCALE 1:25

UNLESS OTHERWISE NOTED, LINEAR DIMENSIONS SHOWN ARE IN MILLIMETERS.

1 .50 0 1 1.5
1:25
NOTE: A3 SIZE REDUCED TO HALF SCALE.

BID DOCUMENT SUBMITTAL

SYMB	SUBMITTAL/REVISION DESCRIPTION	DATE	APR
B	BID DOCUMENT SUBMITTAL	09/26/10	BRG
A	95% DESIGN SUBMITTAL	08/19/10	BRG

This project was made possible by the United States Agency for International Development and the generous support of the American People through USAID Global Architecture and Engineering IQC Contracts.

DESIGNED BY: SL
DATE: 09-26-10
DRAWN BY: SL
SUBMITTED BY: TETRA TECH
CHECKED BY: TH
CAD FILE NAME: WOLT06-A-04.1

USAID FROM THE AMERICAN PEOPLE

A E S P

USAID – OIEE
SARDAR GIRLS HIGH SCHOOL
KABUL, AFGHANISTAN
WELL BUILDING
BUILDING ELEVATIONS
SHEET 1 OF 2

SHEET REFERENCE NUMBER:
LT0006
A-04.1

Z:\127-1298-10001\Work Orders\WO-LT\WO-LT-0006 SGHS Utility Design\CAD\Conceptual\Architectural\WOLT06-A-04.1.dwg 9/25/2010 1:06:09 PM Koethe, Eric

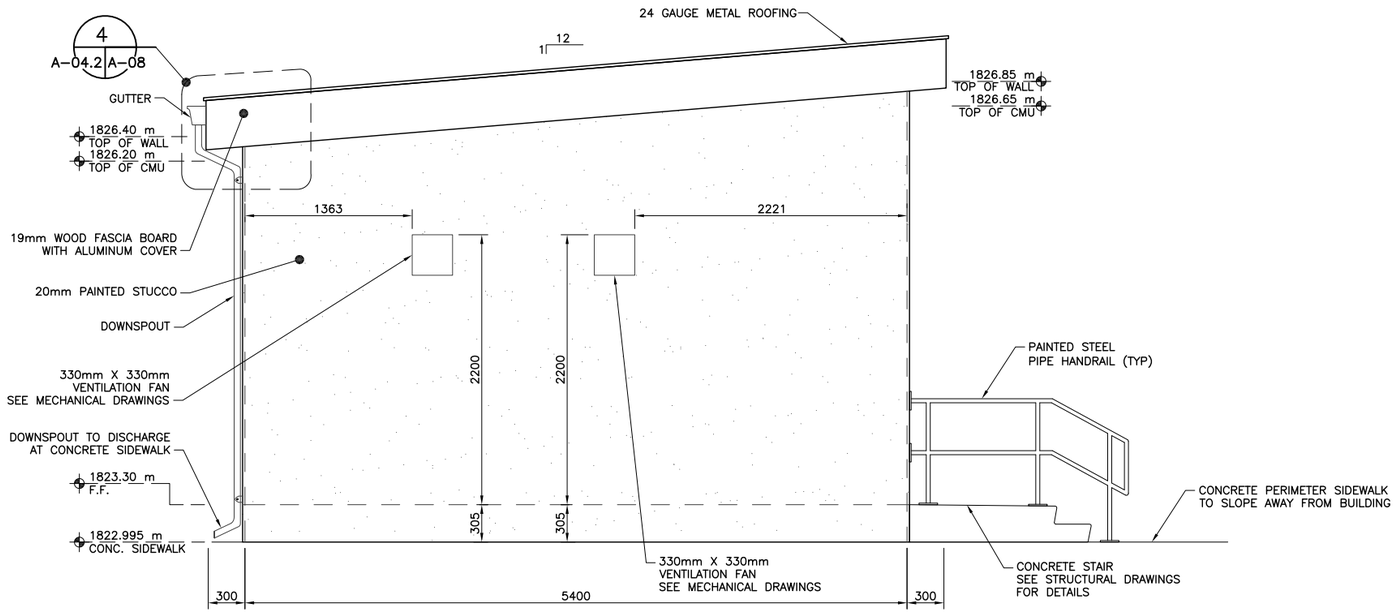

SIDE ELEVATION (3 / A-02,A-03 A-04.2)
SCALE 1:25

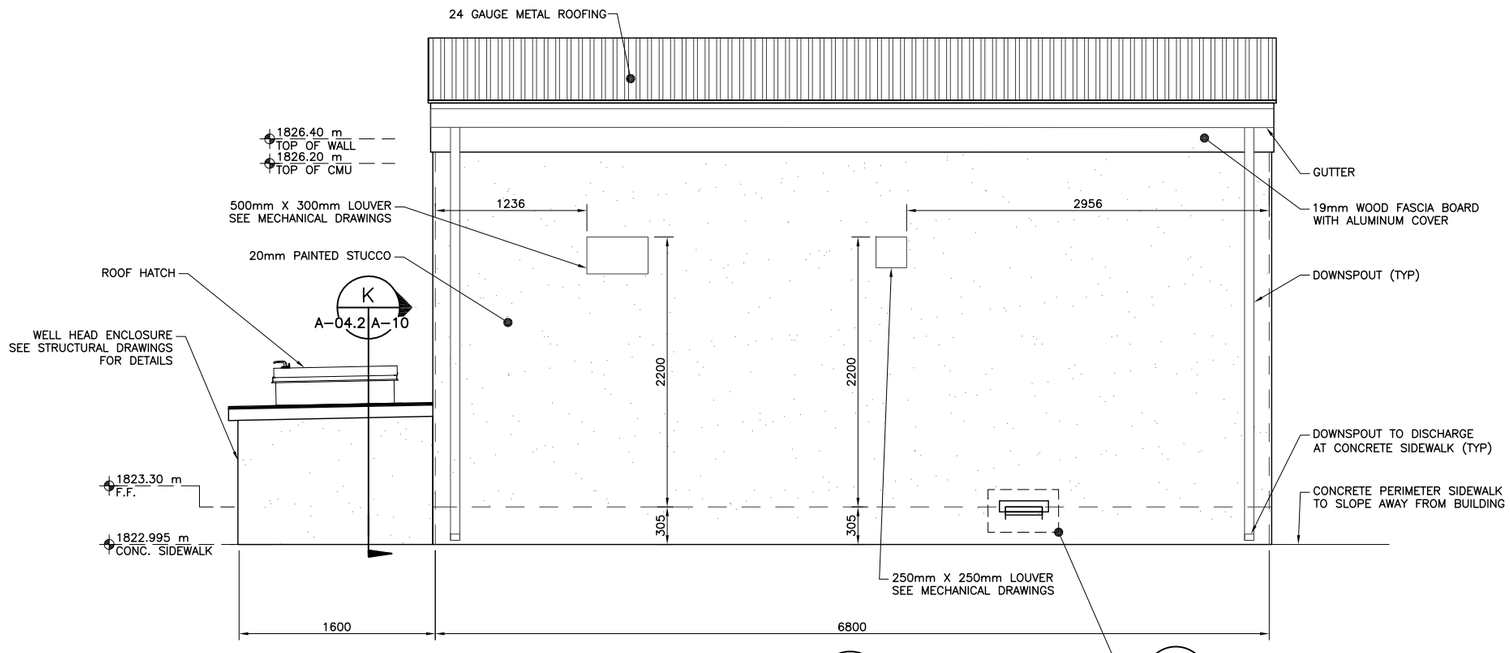

REAR ELEVATION (4 / A-02,A-03 A-04.2)
SCALE 1:25

UNLESS OTHERWISE NOTED, LINEAR
DIMENSIONS SHOWN ARE IN MILLIMETERS.

1 .50 0 1 1.5
1:25
NOTE: A3 SIZE REDUCED TO HALF SCALE.

BID DOCUMENT SUBMITTAL

This project was made possible by the United States Agency for International Development and the generous support of the American People through USAID Global Architecture and Engineering IQC Contracts.

SYMB	SUBMITTAL/REVISION DESCRIPTION	DATE	APR
B	BID DOCUMENT SUBMITTAL	09/26/10	BRG
A	95% DESIGN SUBMITTAL	08/19/10	BRG

DESIGNED BY: SL — DATE: 09-26-10
DRAWN BY: SL — SUBMITTED BY: TETRA TECH
CHECKED BY: TH — CAD FILE NAME: WOLT06-A-04.2

USAID FROM THE AMERICAN PEOPLE

A E S P

USAID – OIEE
SARDAR GIRLS HIGH SCHOOL
KABUL, AFGHANISTAN
WELL BUILDING
BUILDING ELEVATIONS
SHEET 2 OF 2

SHEET REFERENCE NUMBER:
LT0006
A-04.2

Z:\127-1298-10001\Work Orders\WO-LT\WO-LT-0006 SGHS Utility Design\CAD\Conceptual\Architectural\WOLT06-A-04.2.dwg 9/25/2010 1:09:15 PM Koethe, Eric

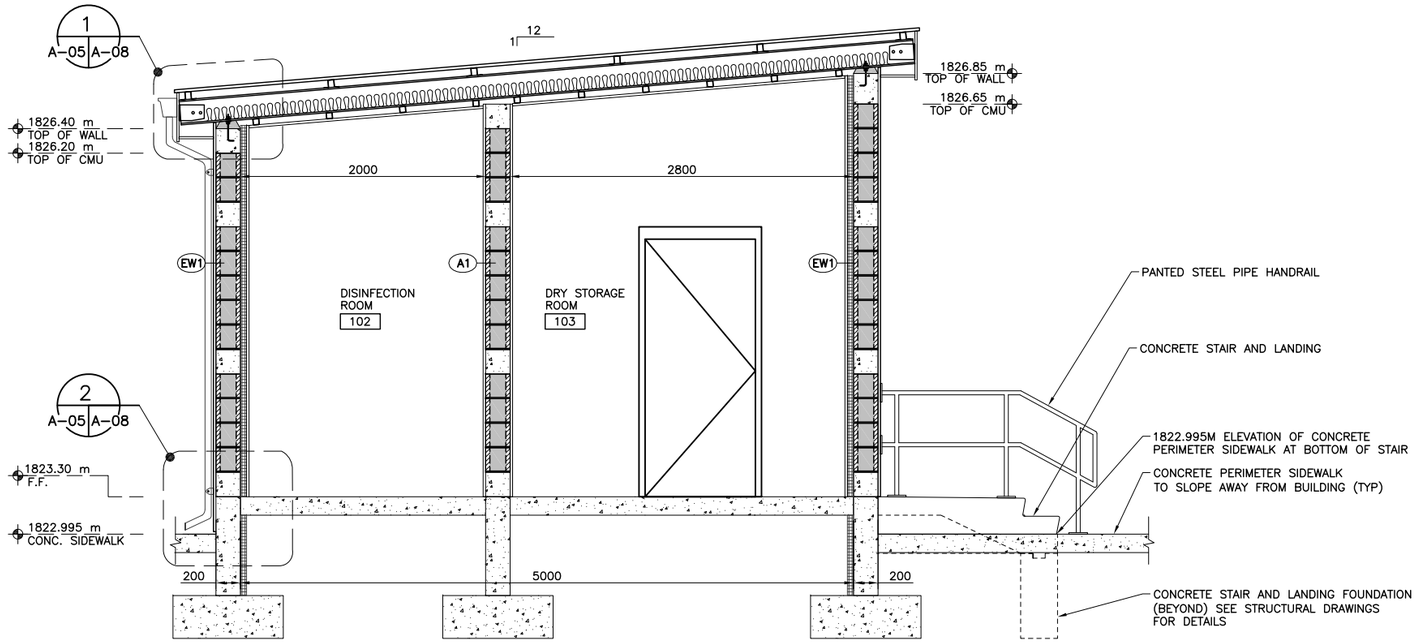

BUILDING SECTION A
SCALE 1:25 A-02,A-03 A-05

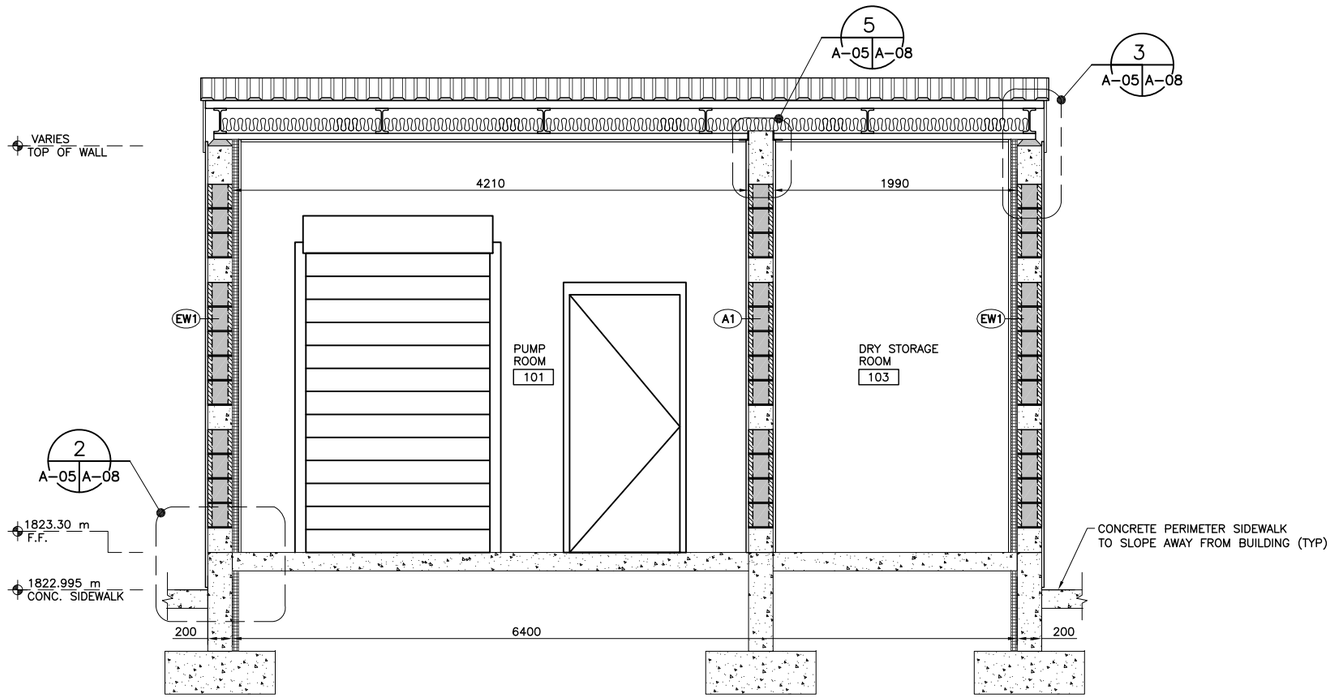

BUILDING SECTION B
SCALE 1:25 A-02,A-03 A-05

UNLESS OTHERWISE NOTED, LINEAR DIMENSIONS SHOWN ARE IN METERS.

1 .50 0 1 1.5
1:25
NOTE: A3 SIZE REDUCED TO HALF SCALE.

BID DOCUMENT SUBMITTAL

This project was made possible by the United States Agency for International Development and the generous support of the American People through USAID Global Architecture and Engineering IQC Contracts.

SYMB	SUBMITTAL/REVISION DESCRIPTION	DATE	APR
B	BID DOCUMENT SUBMITTAL	09/26/10	BRG
A	95% DESIGN SUBMITTAL	08/19/10	BRG

DESIGNED BY: SL
DATE: 09-26-10
DRAWN BY: SL
SUBMITTED BY: TETRA TECH
CHECKED BY: TH
CAD FILE NAME: WOLT06-A-05

USAID FROM THE AMERICAN PEOPLE

A E S P

USAID – OIEE
SARDAR GIRLS HIGH SCHOOL
KABUL, AFGHANISTAN
WELL BUILDING
BUILDING SECTIONS

SHEET REFERENCE NUMBER:
LT0006
A-05

Z:\127-1298-10001\Work Orders\WO-LT\WO-LT-0006 SGHS Utility Design\CAD\Conceptual\Architectural\WOLT06-A-05.dwg 9/25/2010 1:12:17 PM Koethe, Eric

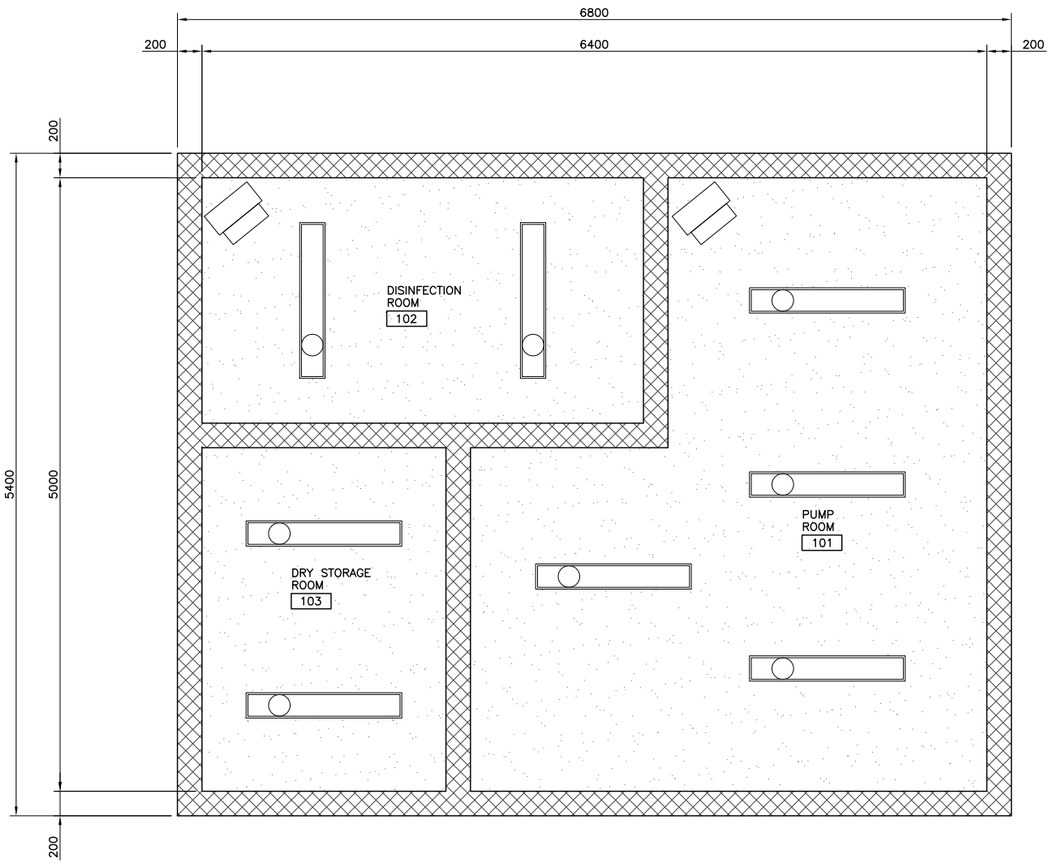

REFLECTED CEILING PLAN

SCALE 1:25

LEGEND:

- LIGHT FIXTURE, SEE ELECTRICAL DRAWINGS
- PAINTED GYPSUM CEILING
- UNIT HEATER (SEE MECHANICAL DRAWINGS FOR RECOMMENDED SUPPORT SYSTEM)

NOTE:

THIS DRAWINGS IS FOR COORDINATION PURPOSES ONLY. REFER TO ELECTRICAL AND MECHANICAL DRAWINGS FOR ADDITIONAL INFORMATION.

UNLESS OTHERWISE NOTED, LINEAR DIMENSIONS SHOWN ARE IN MILLIMETERS.

1 .50 0 1 1.5
1:25
NOTE: A3 SIZE REDUCED TO HALF SCALE.

BID DOCUMENT SUBMITTAL

This project was made possible by the United States Agency for International Development and the generous support of the American People through USAID Global Architecture and Engineering IQC Contracts.

SYMB	SUBMITTAL/REVISION DESCRIPTION	DATE	APR
B	BID DOCUMENT SUBMITTAL	09/26/10	BRG
A	95% DESIGN SUBMITTAL	08/19/10	BRG

DESIGNED BY: SL
DATE: 09-26-10
DRAWN BY: SL
SUBMITTED BY: TETRA TECH
CHECKED BY: TH
CAD FILE NAME: WOLT06-A-06

USAID FROM THE AMERICAN PEOPLE

A E S P

USAID – OIEE
SARDAR GIRLS HIGH SCHOOL
KABUL, AFGHANISTAN
WELL BUILDING
REFLECTED CEILING PLAN

SHEET REFERENCE NUMBER:
LT0006
A-06

Z:\127-1298-10001\Work Orders\WO-LT\WO-LT-0006 SGHS Utility Design\CAD\Conceptual\Architectural\WOLT06-A-06.dwg 9/25/2010 1:20:47 PM Koethe, Eric

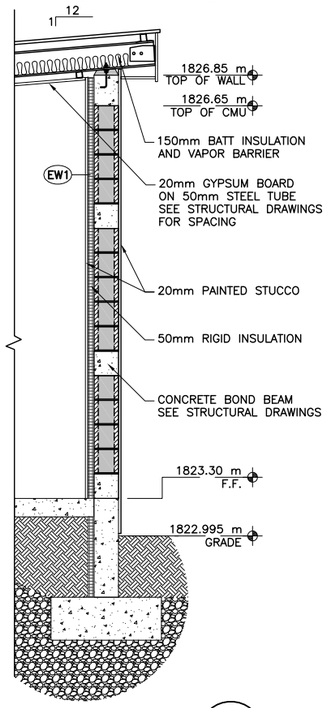

WALL SECTION C A–02 A–07
SCALE 1:25

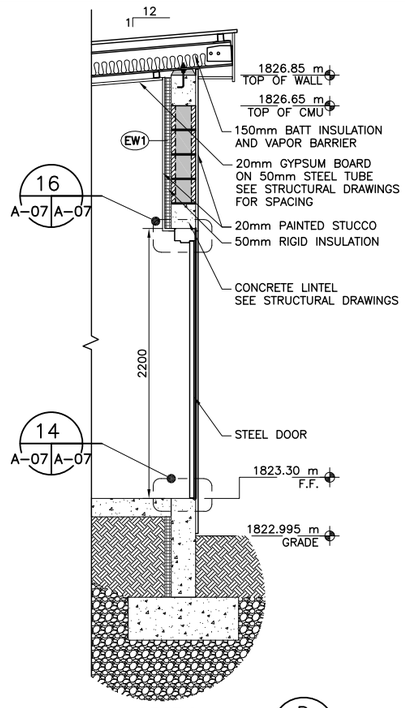

WALL SECTION D A–02 A–07
SCALE 1:25

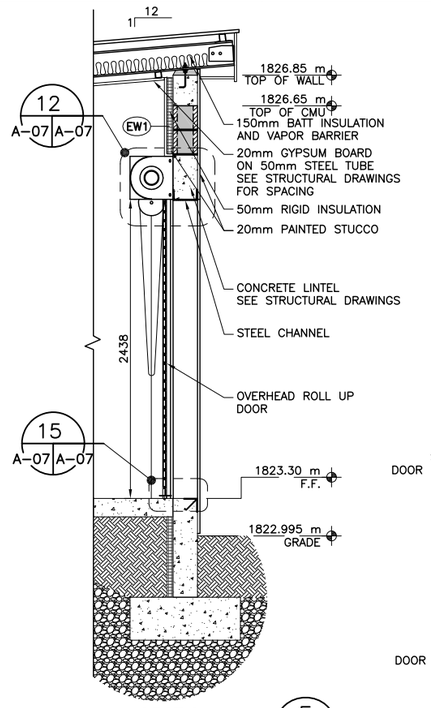

WALL SECTION E A–02 A–07
SCALE 1:25

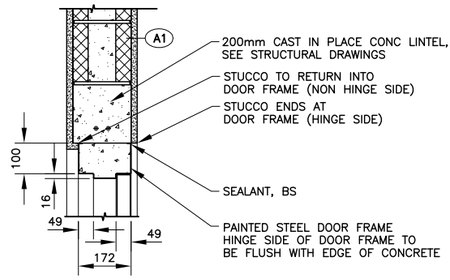

DOOR HEADER DETAIL (INTERIOR) 10 A–09 A–07
SCALE 1:10

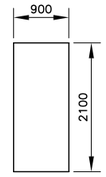

DOOR TYPE
SCALE 1:50

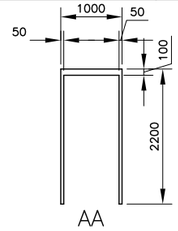

FRAME TYPE
SCALE 1:50

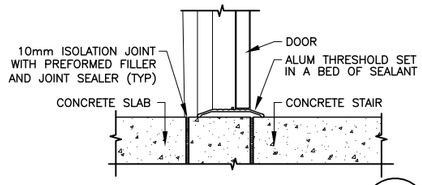

DOOR THRESHOLD DETAIL 14 A–07, A–09 A–07
SCALE 1:10

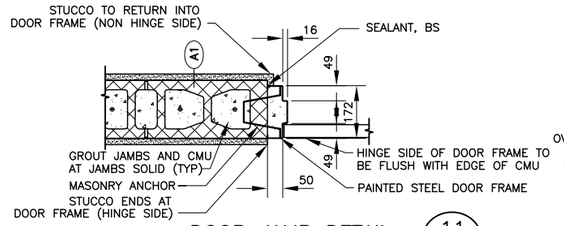

DOOR JAMB DETAIL (INTERIOR) 11 A–09 A–07
SCALE 1:10

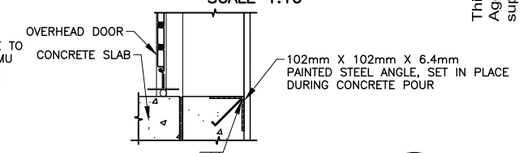

OVERHEAD DOOR SILL DETAIL 15 A–07, A–09 A–07
SCALE 1:10

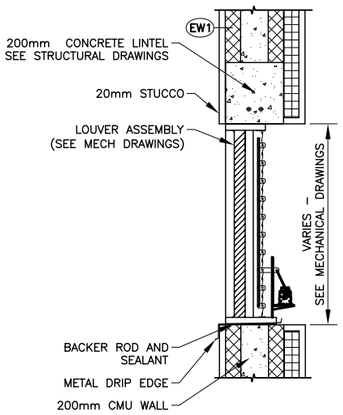

NOTE:
LOUVER SHALL RECEIVE CONTINUOUS SEALANT AROUND PENETRATION IN ORDER TO CREATE WATERTIGHT INSTALLATION.

LOUVER DETAIL
SCALE 1:10

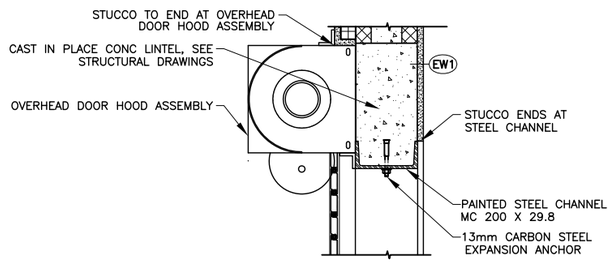

OVERHEAD DOOR HEADER DETAIL 12 A–07, A–09 A–07
SCALE 1:10

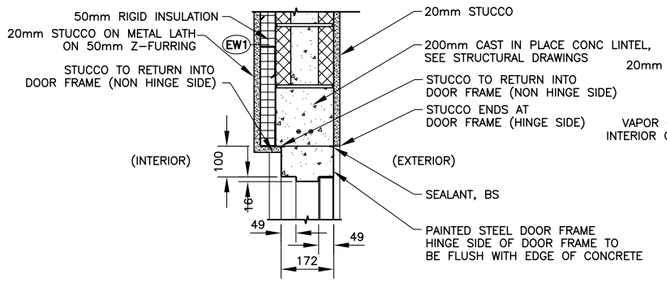

DOOR HEADER DETAIL (EXTERIOR) 16 A–07, A–09 A–07
SCALE 1:10

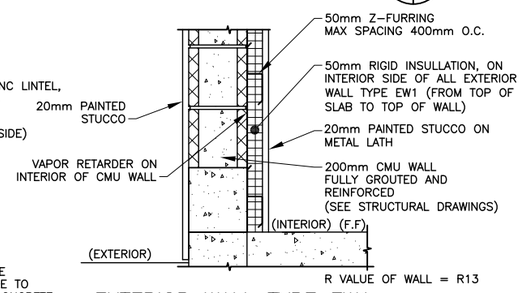

EXTERIOR WALL TYPE EW1
SCALE 1:10

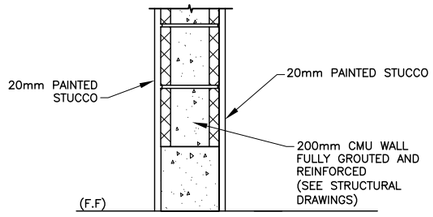

INTERIOR WALL TYPE A1
SCALE 1:10

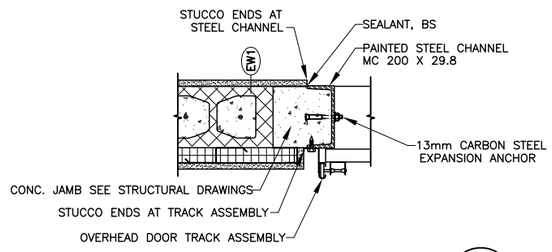

OVERHEAD DOOR JAMB DETAIL 13 A–09 A–07
SCALE 1:10

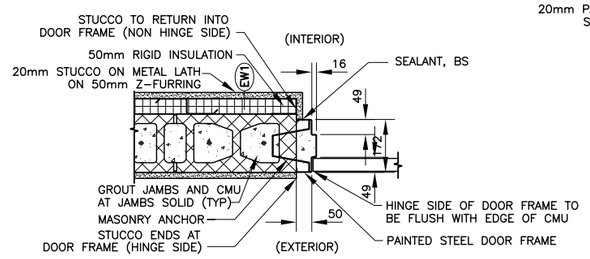

DOOR JAMB DETAIL (EXTERIOR) 17 A–09 A–07
SCALE 1:10

UNLESS OTHERWISE NOTED, LINEAR DIMENSIONS SHOWN ARE IN MILLIMETERS.

1 0 1 2 3 4
1:50
1 .50 0 1 1.5
1:25
0 .50 1.00
1:10
NOTE: A3 SIZE REDUCED TO HALF SCALE.

BID DOCUMENT SUBMITTAL

SYMB	SUBMITTAL/REVISION DESCRIPTION	DATE	APR
B	BID DOCUMENT SUBMITTAL	09/26/10	BRG
A	95% DESIGN SUBMITTAL	08/19/10	BRG

This project was made possible by the United States Agency for International Development and the generous support of the American People through USAID Global Architecture and Engineering IQC Contracts.

DESIGNED BY: SL | DATE: 09–26–10
DRAWN BY: SL | SUBMITTED BY: TETRA TECH
CHECKED BY: TH | CAD FILE NAME: WOLT06–A–07

USAID FROM THE AMERICAN PEOPLE

A E S P

USAID – OIEE
SARDAR GIRLS HIGH SCHOOL
KABUL, AFGHANISTAN
WELL BUILDING
WALL SECTIONS AND DETAILS

SHEET REFERENCE NUMBER:
LT0006
A–07

Z:\127–1298–10001\Work Orders\WO–LT\WO–LT–0006 SGHS Utility Design\CAD\Conceptual\Architectural\WOLT06–A–07.dwg 9/25/2010 1:25:15 PM Koethe, Eric

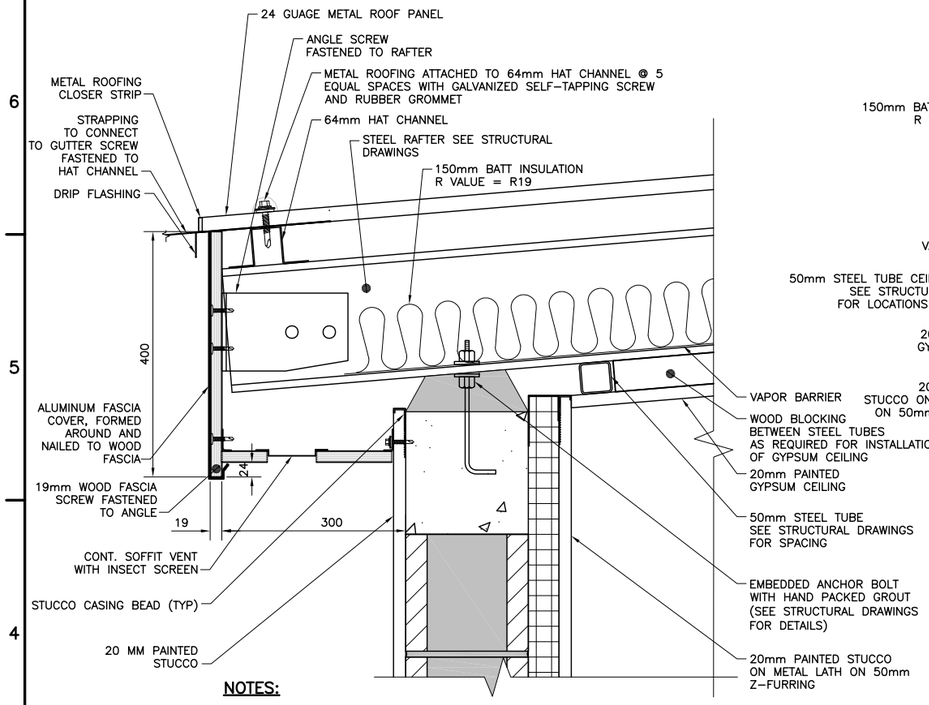

NOTES:

1. GUTTER AND DOWNSPOUT NOT SHOWN FOR CLARITY.
2. SOFFITS AND FASCIAS SHALL BE 19mm THICK EXTERIOR TYPE PLYWOOD.
3. SCREWS SHALL BE SIZE AND TYPE BEST SUITED FOR THE PURPOSE. SCREWS SHALL BE HOT DIPPED GALVANIZED OR ALUMINUM WHEN USED ON EXTERIOR APPLICATIONS. LENGTH OF SCREWS SHALL BE SUFFICIENT TO EXTEND 40mm INTO SUPPORTS.

SOFFIT VENT DETAIL (1)
SCALE 1:5 A-03, A-05 | A-08

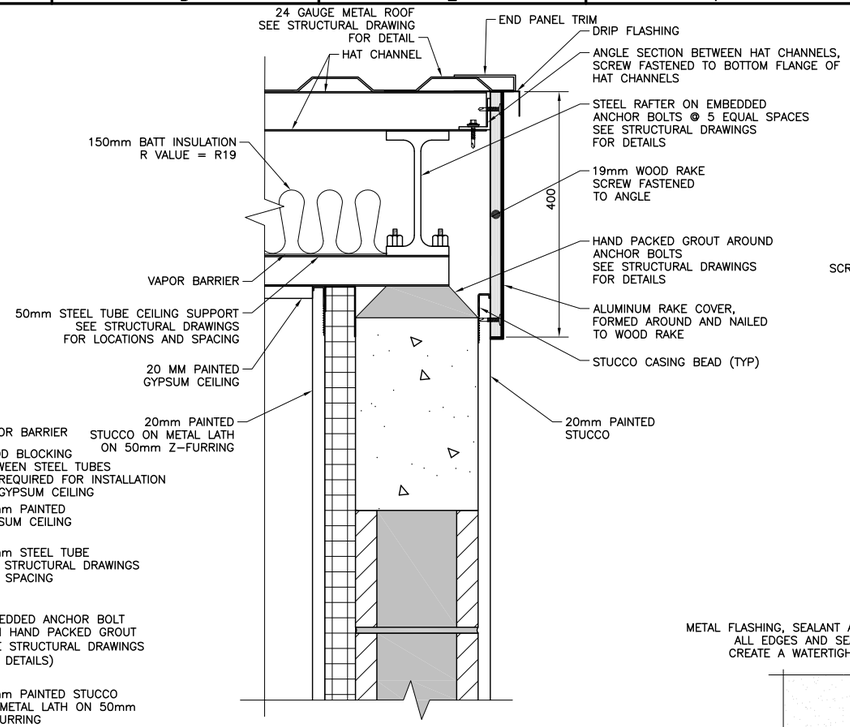

NOTES:

1. RAKE BOARDS SHALL BE 19mm THICK EXTERIOR TYPE PLYWOOD.
2. SCREWS SHALL BE SIZE AND TYPE BEST SUITED FOR THE PURPOSE. SCREWS SHALL BE HOT DIPPED GALVANIZED OR ALUMINUM WHEN USED ON EXTERIOR APPLICATIONS. LENGTH OF SCREWS SHALL BE SUFFICIENT TO EXTEND 40mm INTO SUPPORTS.

RAKE DETAIL (3)
SCALE 1:5 A-03, A-05 | A-08

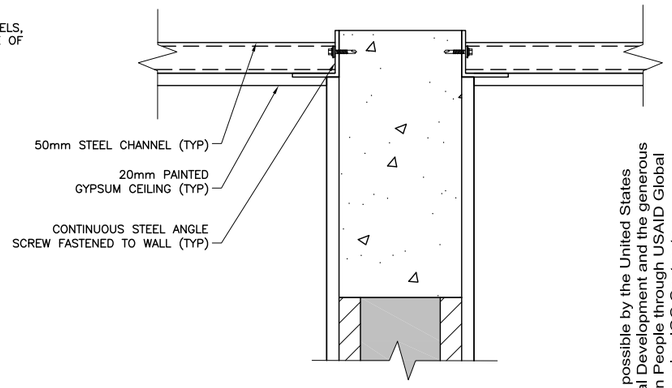

CEILING DETAIL (5)
SCALE 1:5 A-05 | A-08

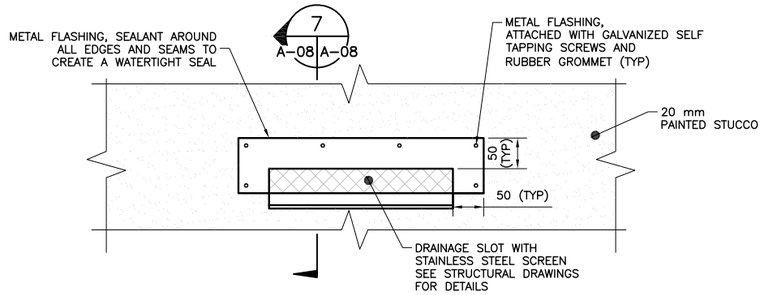

DRAINAGE SLOT/SCUPPER DETAIL (6)
SCALE 1:5 A-04.1, A-04.2 | A-08

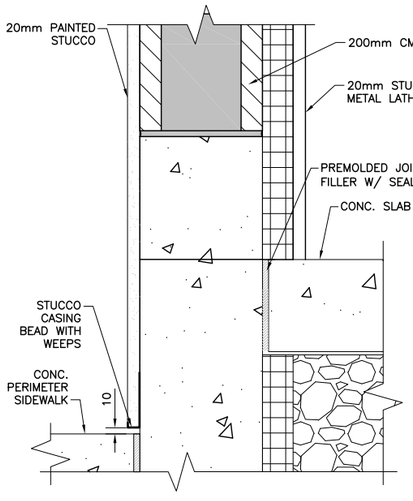

STUCCO CASING BEAD WITH WEEPS DETAIL (2)
SCALE 1:5 A-05 | A-08

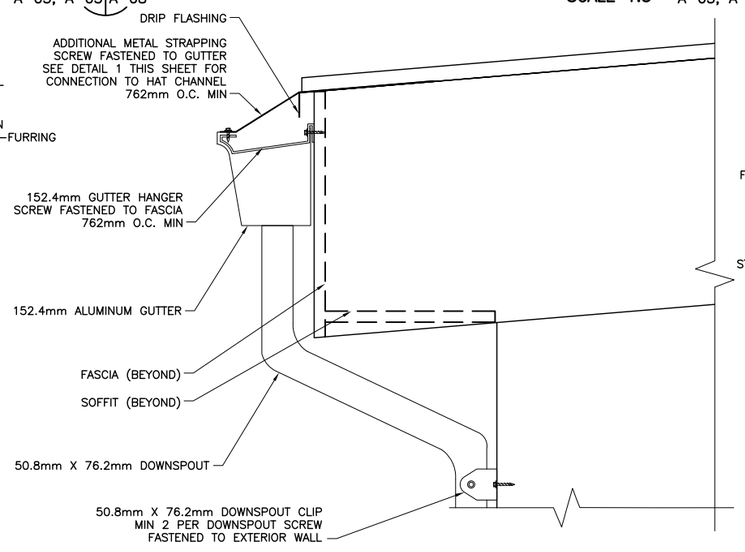

GUTTER DETAIL (4)
SCALE 1:5 A-04.1, A-04.2 | A-08

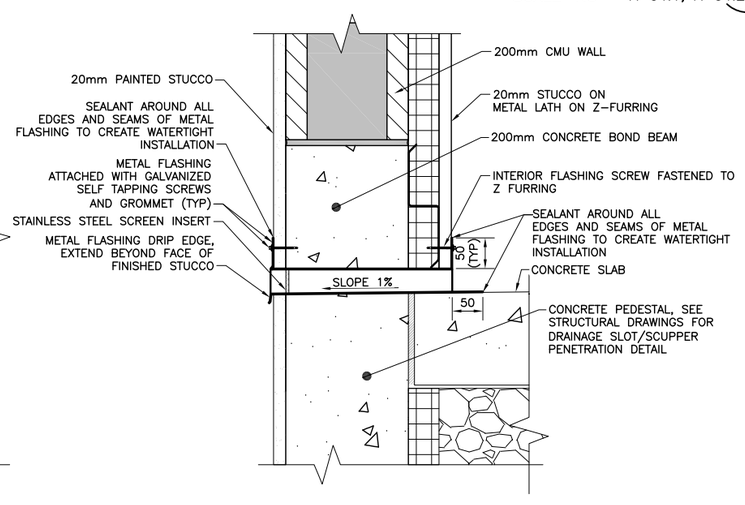

DRAINAGE SLOT/SCUPPER SECTION (7)
SCALE 1:5 A-08 | A-08

UNLESS OTHERWISE NOTED, LINEAR DIMENSIONS SHOWN ARE IN MILLIMETERS.

0 .10 .20 .30 .40 .50
1:5
NOTE: A3 SIZE REDUCED TO HALF SCALE.

BID DOCUMENT SUBMITTAL

SYMB	SUBMITTAL/REVISION DESCRIPTION	DATE	APR
B	BID DOCUMENT SUBMITTAL	09/26/10	BRG
A	95% DESIGN SUBMITTAL	08/19/10	BRG

This project was made possible by the United States Agency for International Development and the generous support of the American People through USAID Global Architecture and Engineering IQC Contracts.

DESIGNED BY: SL | DATE: 09-26-10
DRAWN BY: SL | SUBMITTED BY: TETRA TECH
CHECKED BY: TH | CAD FILE NAME: WOLT06-A-08

USAID FROM THE AMERICAN PEOPLE

A E S P

USAID – OIEE
SARDAR GIRLS HIGH SCHOOL
KABUL, AFGHANISTAN
WELL BUILDING
MISCELLANEOUS DETAILS

SHEET REFERENCE NUMBER:
LT0006 A-08

Z:\127-1298-10001\Work Orders\WO-LT\WO-LT-0006 SGHS Utility Design\CAD\Conceptual\Architectural\WOLT06-A-08.dwg 9/25/2010 1:46:23 PM Koethe, Eric

DOOR SCHEDULE

DOOR TAG ROOM	DOOR TAG DOOR	DOOR TO	DOOR TYPE	DOOR MATERIAL	DOOR RATING	DOOR QTY	DOOR WIDTH	DOOR HEIGHT	DOOR THK	DOOR GLAZING	DOOR FRAME MAT	DOOR FRAME TYPE	DOOR FRAME HEAD	DOOR FRAME JAMB1	DOOR FRAME JAMB2	DOOR FRAME SILL	HARD WARE	REMARKS
101	1	EXTERIOR	F	HMD–E	–	1	900	2100	45	–	STL	AA	16/A–07	17/A–07	–	14/A–07	HWG–1	INSULATED
101	2	EXTERIOR	–	STEEL	–	1	1500	2438	–	–	STL	–	12/A–07	13/A–07	–	15/A–07	–	
102	1	PUMP ROOM	F	STEEL	–	1	900	2100	45	–	STL	AA	10/A–07	11/A–07	–	–	HWG–2	
103	1	PUMP ROOM	F	STEEL	–	1	900	2100	45	–	STL	AA	10/A–07	11/A–07	–	–	HWG–2	

FINISH SCHEDULE

ROOM NO.	NAME	FLOOR FINISH	FLOOR BASE	WALLS EXTERIOR	WALLS INTERIOR	CEILINGS FINISH	CEILINGS HEIGHT	REMARKS
101	PUMP ROOM	SC	–	ST, P	ST, P	GYP, P	VARIES	
102	DISINFECTION RM	SC	–	ST, P	ST, P	GYP, P	VARIES	
103	DRY STORAGE RM	SC	–	ST, P	ST, P	GYP, P	VARIES	

LEGEND

FLOORS	WALLS	BASE	CEILING
SC Sealed Steel Troweled Concrete	P Paint ST Stucco	– –	GYP Gypsum Board P Paint

GENERAL NOTE: ALL DOOR FRAMES, TRIM, AND DOORS TO RECEIVE P

HARDWARE SCHEDULE

DOOR TAG ROOM	DOOR TAG DOOR	HARDWARE	REMARKS
101	1	HWG–1	1 – 1/2 PAIR HINGES 1 – THRESHOLD 1 – LOCKSET 1 – SET WEATHER STRIPPING
101	2	–	SEE OVERHEAD ROLLING DOOR SPECIFICATION
102	1	HWG–2	1 – 1/2 PAIR HINGES 1 – LOCKSET
103	1	HWG–2	1 – 1/2 PAIR HINGES 1 – LOCKSET

HMD–E = EXTERIOR MAXIMUM DUTY DOOR
REFER TO DOOR TYPES ON A–07
REFER TO FRAME TYPES ON A–07

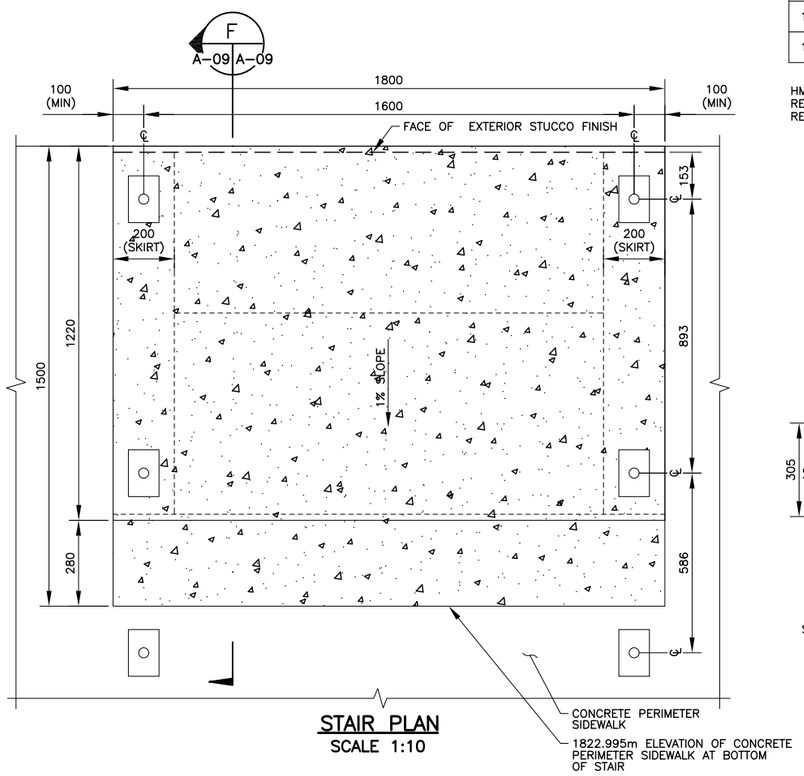

STAIR PLAN
SCALE 1:10

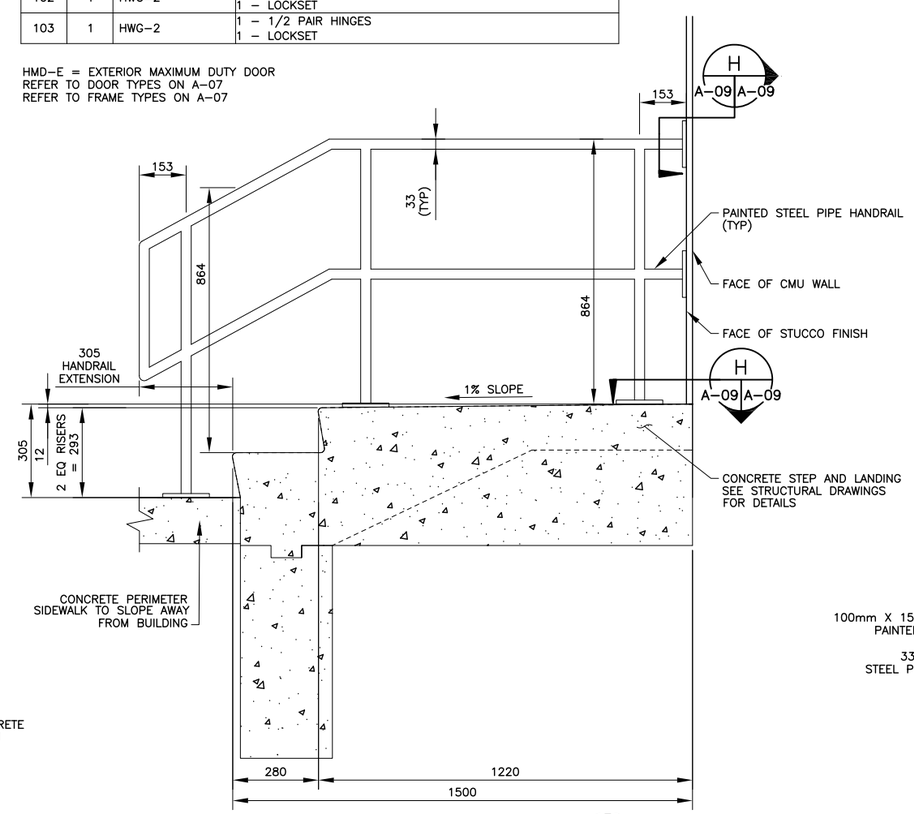

STAIR SECTION
SCALE 1:10
F
A–02, A–09 A–02

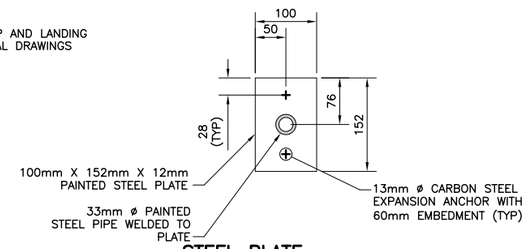

STEEL PLATE DETAIL
SCALE 1:5
H
A–09 A–09

UNLESS OTHERWISE NOTED, LINEAR DIMENSIONS SHOWN ARE IN MILLIMETERS.

0 .50 1.00
1:10
0 .10 .20 .30 .40 .50
1:5
NOTE: A3 SIZE REDUCED TO HALF SCALE.

BID DOCUMENT SUBMITTAL

This project was made possible by the United States Agency for International Development and the generous support of the American People through USAID Global Architecture and Engineering IQC Contracts.

SYMB	SUBMITTAL/REVISION DESCRIPTION	DATE	APR
B	BID DOCUMENT SUBMITTAL	09/26/10	BRG
A	95% DESIGN SUBMITTAL	08/19/10	BRG

DESIGNED BY: SL
DATE: 09–26–10
DRAWN BY: SL
SUBMITTED BY: TETRA TECH
CHECKED BY: TH
CAD FILE NAME: WOLT06–A–09

USAID FROM THE AMERICAN PEOPLE

A E S P

USAID – OIEE
SARDAR GIRLS HIGH SCHOOL
KABUL, AFGHANISTAN
WELL BUILDING
STAIR DETAILS AND SCHEDULES

SHEET REFERENCE NUMBER:
LT0006
A–09

Z:\127–1298–10001\Work Orders\WO–LT\WO–LT–0006 SGHS Utility Design\CAD\Conceptual\Architectural\WOLT06–A–09.dwg 9/25/2010 1:43:21 PM Koethe, Eric

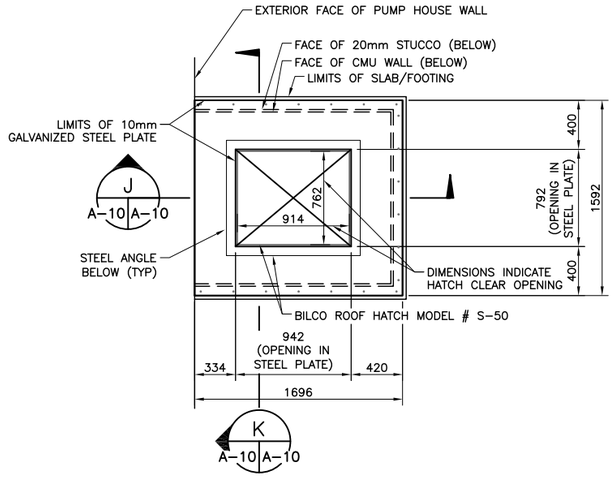

WELL PUMP SECURITY ENCLOSURE PLAN

SCALE 1:25

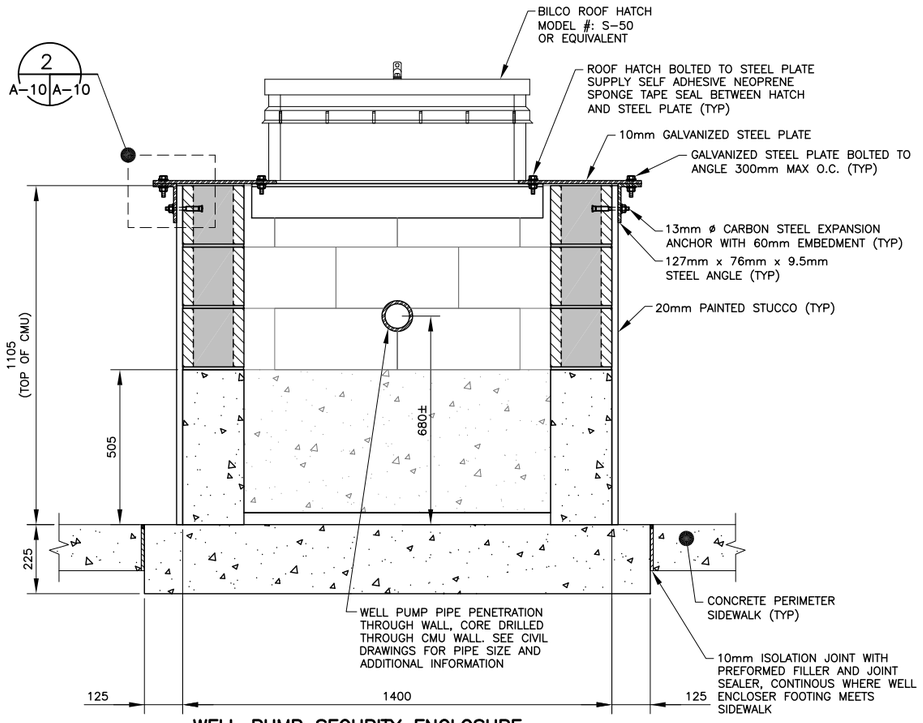

WELL PUMP SECURITY ENCLOSURE SECTION

SCALE 1:10 A-04.1, A-04.2, A-10 A-10 (K)

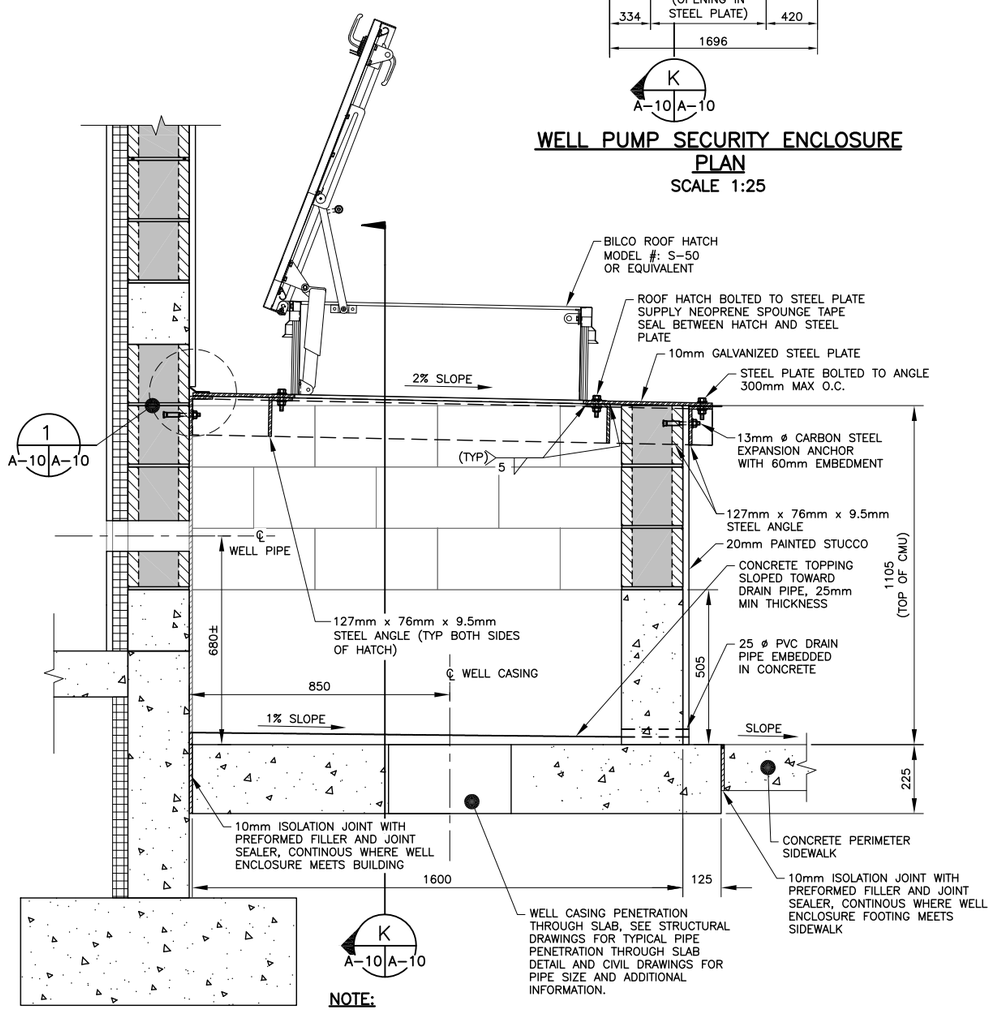

NOTE:

1. PIPING AND WELL PUMP NOT SHOWN FOR CLARITY.

WELL PUMP SECURITY ENCLOSURE SECTION

SCALE 1:10 A-02, A-04.1, A-10 A-10 (J)

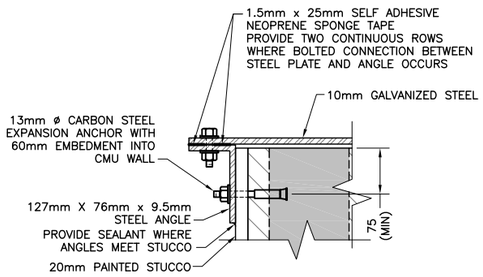

DETAIL

SCALE 1:5 2 A-10 A-10

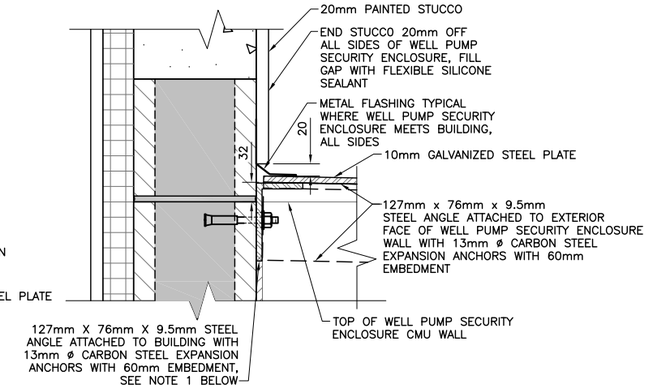

NOTE:

1. STEEL ANGLE SHALL HAVE SLOTTED HOLES AND SHALL BE BOLTED TO BUILDING EXTERIOR WALL ONLY. STEEL PLATE COVER FOR WELL PUMP SECURITY ENCLOSURE SHALL REST ON ANGLE FOR ADDITION SUPPORT, BUT SHALL NOT BE BOLTED.

DETAIL

SCALE 1:5 1 A-10 A-10

UNLESS OTHERWISE NOTED, LINEAR DIMENSIONS SHOWN ARE IN MILLIMETERS.

1:25 (1 .50 0 1 1.5)
1:10 (0 .50 1.00)
1:5 (0 .10 .20 .30 .40 .50)

NOTE: A3 SIZE REDUCED TO HALF SCALE.

BID DOCUMENT SUBMITTAL

SYMB	SUBMITTAL/REVISION DESCRIPTION	DATE	APR
B	BID DOCUMENT SUBMITTAL	09/26/10	BRG
A	95% DESIGN SUBMITTAL	08/19/10	BRG

This project was made possible by the United States Agency for International Development and the generous support of the American People through USAID Global Architecture and Engineering IQC Contracts.

DESIGNED BY: SL
DRAWN BY: SL
CHECKED BY: TH
DATE: 09-26-10
SUBMITTED BY: TETRA TECH
CAD FILE NAME: WOLT06-A-10

USAID FROM THE AMERICAN PEOPLE

A E S P

USAID – OIEE
SARDAR GIRLS HIGH SCHOOL
KABUL, AFGHANISTAN
WELL BUILDING
WELL PUMP SECURITY ENCLOSURE
SECTIONS AND DETAILS

SHEET REFERENCE NUMBER:
LT0006
A-10

Z:\127-1298-10001\Work Orders\WO-LT\WO-LT-0006 SGHS Utility Design\CAD\Conceptual\Architectural\WOLT06-A-10.dwg 9/25/2010 1:49:48 PM Koethe, Eric

GENERAL:

1. ALL LINEAR DIMENSIONS ARE MILLIMETERS UNLESS NOTED OTHERWISE (U.N.O.).
2. ALL DIMENSIONS AND CONDITIONS MUST BE VERIFIED BY THE CONTRACTOR IN THE FIELD AND ANY DISCREPANCIES SHALL BE BROUGHT TO THE ATTENTION OF THE ON–SITE AUTHORIZED REPRESENTATIVE BEFORE PROCEEDING WITH THE AFFECTED PORTION OF THE WORK.
3. THE CONTRACTOR SHALL INFORM THE ON–SITE AUTHORIZED REPRESENTATIVE OF ALL DISCREPANCIES BETWEEN DRAWINGS OF DIFFERENT TRADES, PRIOR TO INITIATION OF ANY WORK.
4. OPENINGS IN FLOORS, ROOFS OR WALLS LESS THAN 300 mm ARE TYPICALLY NOT SHOWN ON THE DRAWINGS. OPENINGS SHOWN ON THE STRUCTURAL DRAWINGS ARE FOR REFERENCE ONLY. THE CONTRACTOR SHALL COORDINATE ALL CHASES, INSERTS, OPENINGS, AND ADDITIONAL WORK SHOWN ON THE CIVIL, ARCHITECTURAL, PLUMBING AND ELECTRICAL DRAWINGS.
5. THE CONTRACTOR SHALL IMMEDIATELY NOTIFY THE AUTHORIZED ON–SITE REPRESENTATIVE WHEN, IN THE COURSE OF CONSTRUCTION, CONDITIONS ARE UNCOVERED WHICH ARE UNANTICIPATED OR OTHERWISE APPEAR TO PRESENT A DANGEROUS CONDITION.
6. STRUCTURAL DRAWINGS SHALL BE USED IN CONJUNCTION WITH CIVIL, ARCHITECTURAL, PLUMBING, MECHANICAL DESIGN AND SHOP DRAWINGS.
7. SECTIONS AND DETAILS SHOWN ON ANY DRAWING ARE TO BE CONSIDERED TYPICAL FOR ALL SIMILAR CONDITIONS.
8. WORK NOT INDICATED ON THE DRAWINGS, BUT REASONABLY IMPLIED TO BE SIMILAR TO THAT SHOWN AT CORRESPONDING LOCATIONS, SHALL BE INCLUDED.

DESIGN LOADS:

1. ALL LOADS ARE IN ACCORDANCE WITH THE INTERNATIONAL BUILDING CODE, IBC 2006 U.N.O. ALL LATERAL LOADS IN ACCORDANCE WITH THE MINIMUM DESIGN LOADS FOR BUILDINGS AND OTHER STRUCTURES, ASCE 07–05. THE DESIGN FOR THE ELEVATED WATER TANK IS IN ACCORDANCE WITH AMERICAN WATER WORKS ASSOCIATION, ANSI/AWWA D100–05.

   A.) DEAD LOADS: WEIGHT OF BUILDING COMPONENTS

   B.) WELL HOUSE LIVE LOADS:
   ROOF LIVE LOAD = 98 kg/m² [20 PSF]
   ROOF SNOW LOAD (ZONE 4) = 98 kg/m² [20 PSF], Pf = [22 PSF], Ce = 0.9, I = 1.1, Ct = 1.0
   FLOOR LIVE LOAD = 490 kg/m² [100 PSF]

   C.) ELEVATED WATER TOWER LIVE LOADS:
   UNIFORM PLATFORM LIVE LOAD = 490 kg/m² [100 PSF]
   CONCENTRATED PLATFORM/CATWALK LIVE LOAD = 455 kg [1000 LBS]
   UNIFORM CATWALK LIVE LOAD = 296 kg/m² [60 PSF]
   UNIFORM PLATFORM SNOW LOAD = 74 kg/m² [15 PSF], Pf = [16.5 PSF], Ce = 0.9, I = 1.1, Ct = 1.0
   TANK LOAD = 5293 kg/m² [1325 PSF]
   RAILING = 136 kg [300 LBS]

   D.) WIND LOADS: BASIC WIND SPEED, USING 3 SECOND GUST, 145 KPH [90MPH], EXPOSURE C AND IMPORTANCE FACTOR OF 1.0 FOR WELL HOUSE AND 1.5 FOR THE WATER TOWER DETERMINED FROM ANSI/ASCE 7–2005.

   E.) SEISMIC DESIGN: BAGRAM, AFGHANISTAN IS THE SEISMIC BASIS OF DESIGN. SPECTRAL ACCELERATION BASED ON Ss=1.28G AND S1=0.51G OCCUPANCY CATEGORY III, SITE CLASS D, IMPORTANCE FACTOR, (I)=1.25. DIRECTION OF SEISMIC LOAD IS IN ACCORDANCE WITH ASCE 7–05 AND UFC 3–301–01. LATERAL FORCE RESISTING SYSTEM: SPECIAL REINFORCED CMU SHEAR WALLS.

FOUNDATIONS:

1. THE FOLLOWING GEOTECHNICAL PROPERTIES WERE USED FOR DESIGN. CONTRACTOR SHALL VERIFY THE GEOTECHNICAL PROPERTIES AND NOTIFY THE ENGINEER OF ANY DIFFERENCES:

   A.) UNIT WEIGHT OF SOIL: 1920 Kg/M³ [120 PCF]
   B.) ALLOWABLE BEARING PRESSURE: 71.82 kPa [1500 PSF]
   C.) ACTIVE EARTH PRESSURE COEFFICIENT: Ka=0.30
   D.) PASSIVE EARTH PRESSURE COEFFICIENT: Kp=3.0
   E.) SUBGRADE MODULUS: 54.3 MPa/m [200 lb/in²/in]
   F.) FOR THE PURPOSE OF DESIGN, GROUND WATER IS ASSUMED TO BE 1500mm BELOW GRADE. CONTRACTOR NEEDS TO VERIFY THAT THE WATER TABLE IS NOT ABOVE THIS LEVEL. IF IT IS ABOVE THIS LEVEL, NOTIFY THE ENGINEER PRIOR TO CONSTRUCTION.

2. ALL FOOTINGS SHALL BE PLACED ON NATURAL UNDISTURBED SOIL OR ON COMPACTED SELECT GRANULAR MATERIAL FILL PREPARED AS FOLLOWS:

   A.) REMOVE UNSUITABLE MATERIAL BELOW THE FOOTING AND REPLACE WITH COMPACTED SELECT GRANULAR MATERIAL FILL. TO A DEPTH DEEMED ADEQUATE BY THE GEOTECHNICAL ENGINEER TO PROVIDE FOUNDATION MATERIAL MEETING OR EXCEEDING THE REQUIREMENT STATED IN FOUNDATION NOTE 1 ABOVE.

   B.) FILL MATERIAL MUST BE PLACED IN LIFTS UP TO A MAXIMUM OF 150mm IN THICKNESS. EACH LIFT COMPACTED TO A MINIMUM OF 100% OF THE MAXIMUM DRY DENSITY AS DETERMINED BY ASTM D–698 AT MOISTURE CONTENT WITHIN MINUS 1% TO PLUS 2% OF THE OPTIMUM.

3. ALL DIMENSIONS, ELEVATIONS AND EXISTING CONDITIONS SHALL BE VERIFIED IN THE FIELD.
4. BEARING SOIL SHALL BE INSPECTED AND APPROVED BY THE QUALITY CONTROL ENGINEER BEFORE CONSTRUCTING ANY FOOTINGS. NO FOUNDATION CONCRETE SHALL BE PLACED IN WATER OR ON FROZEN SUBGRADE MATERIAL.
5. ALL FOUNDATIONS SHALL BE FOUNDED AT LEAST 800 mm BELOW ADJACENT FINISHED GRADE, IF APPLICABLE U.N.O.
6. IT SHALL BE THE RESPONSIBILITY OF THE CONTRACTOR TO PROVIDE TEMPORARY SUPPORT AS NECESSARY DURING EXCAVATION AND UNDERPINNING TO MAINTAIN THE INTEGRITY OF ANY ADJACENT EXISTING STRUCTURES AND/OR INFRASTRUCTURE.
7. INTERIOR FLOOR SLABS ON GRADE SHALL BE UNDERLAIN BY A VAPOR BARRIER AND A MINIMUM OF 150mm OF 13mm CRUSHED STONE PLACED OVER COMPACTED STRUCTURAL FILL OR NATURAL SUBGRADE.
8. THE VAPOR BARRIER SHALL BE A POLYETHYLENE SHEET OF 0.25mm [10 MILS] MIN. THICKNESS. LAP ALL JOINTS 150 mm MIN AND SEAL WATERTIGHT BY SEALANT APPLIED BETWEEN OVERLAPPING EDGES AND ENDS.
9. FOUNDATION DESIGN SHALL BE MODIFIED BY THE CONTRACTOR IF THE EXISTING SOIL CONDITIONS DO NOT MEET THE MINIMUM REQUIREMENTS, AND IF LOADING CRITERIA DIFFERS FROM WHAT IS PRESENTED HEREIN.
10. FOR DEWATERING AND SHORING REQUIREMENTS, SEE THE SPECIFICATIONS.

CAST IN PLACE CONCRETE:

1. CONCRETE WORK SHALL CONFORM TO:

   ACI 301–05 – SPECIFICATIONS FOR STRUCTURAL CONCRETE.
   ACI 318–08 – BUILDING CODE REQUIREMENTS FOR STRUCTURAL CONCRETE AND COMMENTARY.

2. CONCRETE SHALL HAVE A MINIMUM CONCRETE COMPRESSIVE STRENGTH AT 28 DAYS, F'C = 28 MPa (4000 PSI). THE MAXIMUM WATER–CEMENT RATIO OF 0.45 (BY WEIGHT). ALL CONCRETE EXPOSED TO WEATHER SHALL BE AIR–ENTRAINED, IN ACCORDANCE WITH ASTM C231.
3. CONCRETE SHALL BE CONTROLLED NORMAL WEIGHT CONCRETE, PROPORTIONED, MIXED AND PLACED UNDER THE SUPERVISION OF AN APPROVED QUALITY CONTROL ENGINEER.
4. THE FOLLOWING MINIMUM CONCRETE COVER SHALL BE PROVIDED FOR REINFORCING:

   A.) CONCRETE PLACED AGAINST THE EARTH 75mm
   B.) SIDES OF FOOTINGS, WALLS AND PIERS
   18 ø BAR AND LARGER 50mm
   16 ø BAR AND SMALLER 40mm
   C.) WALLS, AND SLABS–ON–GRADE (FROM TOP) 25mm

5. CHAMFER EXPOSED EDGES 20mm U.N.O.
6. ALL REINFORCING STEEL SHALL BE DEFORMED BARS CONFORMING TO ASTM A615, GRADE 60. SEE SPLICE TABLE FOR LAP LENGTHS. MINIMUM YIELD STRENGTH FY = 4218 kg/cm²
7. DO NOT WELD OR BEND REINFORCEMENT IN FIELD UNLESS SPECIFICALLY SHOWN OR APPROVED BY ENGINEER.
8. REINFORCING BARS EXTEND 12 BAR DIAMETERS BUT NOT LESS THAN 300mm BEYOND BEND U.N.O.
9. NO BARS SHALL BE CUT OR OMITTED IN THE FIELD BECAUSE OF SLEEVES, DUCT OPENINGS OR RECESSES. BARS MAY BE MOVED ASIDE WITHOUT CHANGE IN LEVEL WITH THE APPROVAL OF THE QUALITY CONTROL ENGINEER.
10. REINFORCEMENT STEEL SHALL BE CONTINUOUS THROUGH ALL CONSTRUCTION JOINTS. ALL CONSTRUCTION JOINTS SHALL BE KEYED U.N.O.
11. WHERE VERTICAL CONSTRUCTION JOINTS ARE NOT SHOWN, OR WHEN ALTERNATE LOCATIONS ARE PROPOSED, DRAWINGS SHOWING LOCATION OF CONSTRUCTION JOINTS AND CONCRETE PLACING SEQUENCE SHALL BE SUBMITTED TO THE ENGINEER FOR APPROVAL PRIOR TO PREPARATION OF THE REINFORCEMENT SHOP DRAWINGS. CONSTRUCTION JOINTS SHALL BE LOCATED IN THE MIDDLE THIRD OF THE BEAM OR SLAB SPAN. CONCRETE SHALL BE PLACED WITHOUT HORIZONTAL CONSTRUCTION JOINTS U.N.O.
12. ALL KEYS SHALL BE 50mm BY 100mm NOMINAL U.N.O.
13. CONSTRUCTION JOINTS BETWEEN INTERIOR SLABS ON GRADE AND VERTICAL SURFACES SHALL CONSIST OF ASPHALT–SATURATED FELT, EXTENDING THE FULL DEPTH OF THE SLAB. EXPANSION JOINT FILLERS SHALL BE PREFORMED MATERIALS CONFORMING TO ASTM D994.
14. DETAILING, FABRICATION, AND ERECTION OF REINFORCEMENT SHALL CONFORM TO ACI 318 BUILDING CODE REQUIREMENTS FOR STRUCTURAL CONCRETE, ACI 315 DETAILS AND DETAILING OF CONCRETE REINFORCEMENT, AND CRSI MANUAL OF STANDARD PRACTICE.
15. CONTRACTOR SHALL COORDINATE LOCATIONS OF PENETRATIONS, SLEEVES, INSERTS, ETC. WITH CONCRETE CONSTRUCTION. NO PIPES SHALL PASS THROUGH CONCRETE WITHOUT THE PERMISSION OF THE AUTHORIZED REPRESENTATIVE. STEEL PIPE SLEEVES SHALL BE PROVIDED AND SPACED A MINIMUM OF THREE PIPE DIAMETERS ON CENTER. CONDUIT AND OTHER EMBEDDED ITEMS SHALL BE CLEAN AND FREE OF OIL AND OTHER FOREIGN MATTER SUCH AS LOOSE COATINGS OR RUST, PAINT AND SCALE.
16. PROVIDE ALL NECESSARY CHAIRS, CHAIR BARS, SPACERS, ETC., WIRED SECURELY TO HOLD REINFORCEMENT IN POSITION. THESE ACCESSORIES SHALL BE PLASTIC BOOTED WHERE CONCRETE IS TO BE EXPOSED TO WEATHER OR MOISTURE. WIRE TIES SHALL BE 16 GAUGE (1.5mm) OR HEAVIER BLACK ANNEALED STEEL WIRE.
17. THE CONTRACTOR SHALL SUBMIT SHOP DRAWINGS SHOWING REINFORCING STEEL PLACEMENT, SCHEDULES, SIZES, GRADES, AND SPLICING AND BENDING DETAILS. DRAWINGS SHALL SHOW SUPPORT DETAILS INCLUDING TYPES, SIZES AND SPACING.
18. REINFORCEMENT SHALL BE STORED OFF THE GROUND ON PLATFORMS, SKIDS OR OTHER SUPPORTS.
19. CONTRACTOR SHALL FOLLOW ACI–306 COLD WEATHER CONCRETING WHEN THE DAILY AMBIENT TEMPERATURES ARE 0 DEGREES C.

MINIMUM REBAR IN CONCRETE SPLICE LENGTHS mm fy = 4218kg/cm² f'c = 28MPa		
BAR SIZE ø mm	TOP BARS	OTHER BARS
10	650	500
12	850	650
16	1050	800
20	1250	950
25	2050	1600

SPLICE NOTES

1. BASED ON NORMAL WEIGHT CONCRETE, UNCOATED BARS, CLEAR SPACING NOT LESS THAN FOUR BAR DIAMETERS, AND CLEAR COVER NOT LESS THAN 40mm.
2. WHERE SPACING BETWEEN BARS IS LESS THAN FOUR BAR DIAMETERS, OR CLEAR COVER IS LESS THAN TWO BAR DIAMETERS, INCREASE SPLICE LENGTHS SHOWN BY 50%.
3. * HORIZONTAL BARS WITH MORE THAN 300mm OF CONCRETE CAST BELOW THE BARS AS DEFINED BY A.C.I. 318. WHERE HORIZONTAL WALL REINFORCEMENT IS UNIFORMLY SPACED IN A VERTICAL PLANE AT 300mm MAXIMUM SPACING, LENGTHS MAY BE AS FOR 'OTHER BARS'.

UNLESS OTHERWISE NOTED, LINEAR DIMENSIONS SHOWN ARE IN MILLIMETERS.

BEND DIAMETER SCHEDULE

db = BAR DIAMETER

D = FINISHED INSIDE BEND DIA.

D = 6 db FOR ø10mm THRU ø25mm

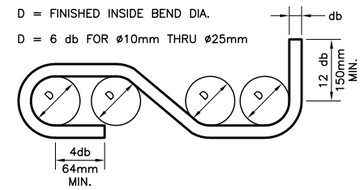

STANDARD HOOKS AND BENDS

WALL BARS SHALL BE TIED TOGETHER

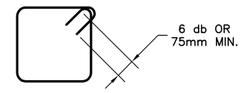

PEDESTAL TIES

SPLICES FOR SUCCESSIVE TIES TO BE PLACED AT ALTERNATE CORNERS

TYPICAL REINFORCING BAR STIRRUPS AND TIES

N.T.S.

LEGEND (FOR REINFORCING SHOWN IN PLAN OR ELEVATION)

	90° HOOK IN THE PLANE OF THE DRAWING
	90° BEND PERPENDICULAR TO THE PLANE OF THE DRAWING
	HOOK PERPENDICULAR TO THE PLANE OF THE DRAWING
	180° HOOK IN THE PLANE OF THE DRAWING
	OFFSET IN THE PLANE OF THE DRAWING

BAR SIZE	ø10	ø12	ø16	ø20	ø25
ldh	190	230	305	380	475

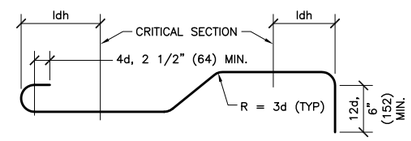

180° HOOK 45° BEND 90° HOOK

NOTE: "d" = BAR DIAMETER.

BENDS IN REINFORCING BARS

N.T.S.

ABBREVIATIONS AND SYMBOLS

ADD'L	ADDITIONAL	FIN. GR.	FINISHED GRADE	T&B	TOP AND BOTTOM
ALT.	ALTERNATE	FTG	FOOTING	T.O.	TOP OF
ARCH	ARCHITECTURAL	INFO	INFORMATION	T.O.S.	TOP OF STEEL
BOT.	BOTTOM	JT.	JOINT	TYP.	TYPICAL
B.O.	BOTTOM OF	LLH	LONG LEG HORIZONTAL	U.N.O.	UNLESS NOTED OTHERWISE
C.J.	CONSTRUCTION JOINT	LLV	LONG LEG VERTICAL	VERT.	VERTICAL
CLR	CLEAR	MCJ	MASONRY CONTROL JOINT	VIF	VERIFY IN FIELD
CONT.	CONTINUOUS	MFR.	MANUFACTURER		
COL	COLUMN	MAX.	MAXIMUM		
COORD.	COORDINATE	MIN.	MINIMUM		
CTR.	CENTER	N–S	NORTH–SOUTH		
DEMO	DEMOLITION	NO.	NUMBER		
DIA.	DIAMETER	O.C.	ON CENTER		
DN	DOWN	O.D.	OUTSIDE DIAMETER		
DWG	DRAWING	OPN'G	OPENING		
E–W	EAST–WEST	P.C.C.	PORTLAND CEMENT CONCRETE		
E.F.	EACH FACE	PL	PLATE		
EL.	ELEVATION	PROP.	PROPOSED		
EOD	EDGE OF DECK	PSF	POUNDS PER SQUARE FOOT		
EOS	EDGE OF SLAB	REINF.	REINFORCING		
EQ.	EQUAL	SIM	SIMILAR		
E.W.	EACH WAY	SQ.	SQUARE		
EXIST	EXISTING	SS	STAINLESS STEEL		
FDN	FOUNDATION	STD	STANDARD		
		STIFF	STIFFENER		
		STRUCT	STRUCTURAL		

CONSTRUCTION JOINT
DIRECTION OF SPAN
DIRECTION OF SLOPE
℄ PLATE
℄ CENTERLINE
DO DITTO
℄ SIDEWALL LINE

NOTE: A3 SIZE REDUCED TO HALF SCALE.

BID DOCUMENT SUBMITTAL

SYMB	SUBMITTAL/REVISION DESCRIPTION	DATE	APR
B	BID DOCUMENT SUBMITTAL	09/26/10	SGW
A	95% DESIGN SUBMITTAL	08/19/10	SGW

This project was made possible by the United States Agency for International Development and the generous support of the American People through USAID Global Architecture and Engineering IQC Contracts.

DESIGNED BY: RB
DRAWN BY: SL
CHECKED BY: APL
DATE: 09–26–10
SUBMITTED BY: TETRA TECH
CAD FILE NAME: LT0006–S–01

USAID FROM THE AMERICAN PEOPLE

A E S P

USAID – OIEE
SARDAR GIRLS HIGH SCHOOL
KABUL, AFGHANISTAN

STRUCTURAL GENERAL NOTES
SHEET 1 OF 2

SHEET REFERENCE NUMBER:
LT0006
S–01

Z:\127–1298–10001\Work Orders\WO–LT\WO–LT–0006 SGHS Utility Design\CAD\Conceptual\Structural\DWG\LT0006–S–01.dwg 9/25/2010 2:37:29 PM Koethe, Eric

STRUCTURAL STEEL:

1. ALL STRUCTURAL STEEL WORK SHALL CONFORM TO:
   AISC – CODE OF STANDARD PRACTICE FOR STEEL BUILDING AND BRIDGES, 13TH EDITION
   AISC – SPECIFICATION FOR STRUCTURAL STEEL BUILDINGS
   AWS D1.1–08 – STRUCTURAL WELDING CODE – STEEL
   AISC SPECIFICATION FOR STRUCTURAL JOINTS USING ASTM A325 BOLTS

2. STRUCTURAL STEEL SHALL CONFORM TO:
   A. W SHAPES, CHANNELS, ANGLES, PLATES AND BARS SHALL CONFORM TO ASTM A36, MIN. YIELD STRENGTH = 2531 kg/cm² (36 KSI).
   B. CONNECTION BOLTS SHALL CONFORM TO ASTM A325 (SEE NOTE 14).
   C. ANCHOR BOLTS SHALL CONFORM TO ASTM A 307 USING A 36 STEEL.
   D. WELDED HOOKED OR HEADED STUDS SHALL CONFORM TO AWS D1.1 – TYPE B
   E. STUD SHEAR CONNECTORS SHALL CONFORM TO THE REQUIREMENTS OF ASTM A108
   F. STRUCTURAL STEEL TUBE (HSS) SHALL CONFORM TO ELECTRIC RESISTANCE WELDED OR SEAMLESS PER DIN, BS, AISC, OR EN STANDARDS, WITH MINIMUM YIELD STRENGTH OF 290 MPa.

3. UNLESS OTHERWISE NOTED ON THE DRAWINGS, ALL WELDING SHALL BE PERFORMED IN A FABRICATION SHOP BY APPROVED WELDERS WITH E70XX ELECTRODES. WELDS SHALL DEVELOP THE FULL STRENGTH OF THE MATERIALS BEING WELDED, U.N.O. MINIMUM FILLET WELD SHALL BE 5mm. UNLESS NOTED OTHERWISE ON THE DRAWINGS, THERE SHALL BE NO STRUCTURAL STEEL FIELD WELDING WITHOUT WRITTEN APPROVAL FROM THE AUTHORIZED REPRESENTATIVE.

4. FIELD CUTTING OF STRUCTURAL STEEL OR ANY FIELD MODIFICATIONS OF STRUCTURAL STEEL SHALL NOT BE MADE WITHOUT PRIOR WRITTEN APPROVAL OF THE ENGINEER FOR EACH SPECIFIC CASE.

5. NON–SHRINK GROUT SHALL BE USED BELOW THE BEARING PLATES.

6. THE CONTRACTOR SHALL SUBMIT SHOP DRAWINGS SHOWING MATERIAL, SIZES, SPACING AND LOCATIONS OF STRUCTURAL MEMBERS AND CONNECTIONS FOR REVIEW. INDICATE WELDED CONNECTIONS AND NET WELD LENGTHS.

7. SPLICING STRUCTURAL MEMBERS WHERE NOT DETAILED ON THE DRAWINGS IS PROHIBITED WITHOUT PRIOR APPROVAL OF THE AUTHORIZED REPRESENTATIVE.

8. THE CONTRACTOR SHALL SUPPLY ALL PLATES, CLIPS, SEAT ANGLES, CONNECTIONS ETC., AS REQUIRED FOR COMPLETION OF THE STRUCTURAL WORK. EVEN IF SUCH ITEMS ARE NOT EXPLICITLY CALLED FOR ON THE ARCHITECTURAL OR STRUCTURAL DRAWINGS.

9. ALL STEEL EXPOSED TO WEATHER SHALL BE HOT DIP GALVANIZED PER ASTM A123. ALL BOLTS EXPOSED TO WEATHER SHALL BE HOT DIP GALVANIZED PER ASTM A153 UNLESS NOTED OTHERWISE IN THE ARCHITECTURAL AND STRUCTURAL DRAWINGS.

10. CONNECTIONS NOT DETAILED IN THESE PLANS SHALL BE DESIGNED BY THE STEEL FABRICATOR AS "SIMPLE TYPE 2" CONNECTIONS AND SHALL RESIST AN END REACTION "R" FOR THE SPECIFIC BEAM SIZE FROM "AISC MANUAL OF STEEL CONSTRUCTION (13TH EDITION)" TABLES ENTITLED "ALLOWABLE LOADS ON BEAMS."

11. ALL STRUCTURAL STEEL SHALL BE DETAILED, FABRICATED AND ERECTED IN ACCORDANCE WITH AISC'S "SPECIFICATION FOR STRUCTURAL STEEL BUILDINGS," LATEST EDITION.

12. IF AISC STRUCTURAL STEEL MEMBERS ARE NOT AVAILABLE, THE CONTRACTOR SHALL SUBMIT A RECOMMENDED EQUIVALENT TO THE AUTHORIZED REPRESENTATIVE FOR REVIEW AND APPROVAL PRIOR TO PROCUREMENT AND FABRICATION.

13. STEEL FLOOR PLATES AND LADDERS SHALL HAVE AN APPROVED ANTISLIP SURFACE.

14. FOR ALL CONNECTIONS, BOLT PROJECTIONS SHALL BE SUFFICIENT SUCH THAT NO THREADS ARE INCLUDED IN THE SHEAR PLANE. CONNECTION BOLTS HAVE BEEN DESIGNED FOR SHEAR TYPE X – THREADS EXCLUDED FROM THE SHEAR PLANE.

FIXED LADDERS & CAGES:

1. LADDERS AND SAFETY DEVICES SHALL BE IN ACCORDANCE WITH SECTIONS 5.4 AND 5.5 OF AWWA D103 AND OSHA 29 CFR 1910.27. SECTIONS 5.4 AND 5.5 OF AWWA D103 REPRESENT THE MINIMUM REQUIREMENT.

2. THE FIXED LADDER HAS BEEN DESIGNED TO SUPPORT TWO LOADS OF 114 kgf [250 LBS], CONCENTRATED BETWEEN ANY TWO CONSECUTIVE ATTACHMENTS.EACH LADDER RUNG HAS BEEN DESIGNED TO SUPPORT A MINIMUM LOAD OF 114 kg [250 LBS] APPLIED IN THE MIDDLE OF THE STEP OR RUNG.

3. LADDERS SHALL EXTEND AT LEAST 1100MM ABOVE AN ACCESS LEVEL OR PLATFORM EITHER BY CONTINUATION OF THE RUNG SPACING AS HORIZONTAL GRAB BARS OR BY PROVIDING VERTICAL GRAB BARS THAT MUST HAVE THE SAME LATERAL SPACING AS THE VERTICAL LEGS OF THE LADDER RAILS.

STEEL DECKING:

1. STEEL DECK SHALL BE FLAT ROLLED CARBON STEEL WITH PROFILE SHOWN ON PLANS.

2. SHEET STEEL FOR GALVANIZED DECK SHALL CONFORM TO ASTM A653, GRADE 80 STRUCTURAL QUALITY, WITH A MINIMUM YIELD STRENGTH OF 230 MPa.

3. ACCESSORIES SHALL BE OF SAME MATERIAL AS DECK, UNLESS SPECIFIED OTHERWISE.

4. STEEL DECKS SHALL HAVE A MINIMUM BEARING LOAD OF 38mm, OR AS PER THE DECKING MANUFACTURER'S RECOMMENDATIONS.

5. FASTEN ROOF DECK UNITS TO THE STEEL SUPPORTING MEMBERS USING #10 SCREWS AT 300mm MAX O.C.

6. STEEL DECK UNITS SHALL SPAN THREE OR MORE SPANS WHERE POSSIBLE.

MASONRY:

1. CONCRETE MASONRY CONSTRUCTION, SHALL CONFORM TO SPECIFICATION FOR CONCRETE MASONRY CONSTRUCTION (ACI 530.1/ASCE–5/TMS 602) & BUILDING CODE REQUIREMENT FOR MASONRY STRUCTURES (ACI 530/ASCE–5/TMS 402, 2008).

2. ALL CONCRETE MASONRY UNITS (CMU) SHALL CONFORM TO ASTM C 90, TYPE I, NORMAL WEIGHT.

3. CONCRETE MASONRY UNITS SHALL BE A MINIMUM UNIT COMPRESSIVE STRENGTH OF 141 kg/cm² (2000 PSI) MEASURED ON THE NET SECTION AS DETERMINED BY THE UNIT TEST METHOD IN ACCORDANCE WITH ASTM C 140. THE MINIMUM COMPRESSIVE STRENGTH OF MASONRY (f'm) SHALL BE 105 kg/cm² (1500 PSI) AT 28 DAYS, MEASURED ON THE NET SECTION.

4. MORTAR SHALL BE TYPE S CONFORMING TO ASTM C 270, AND HAVE A MINIMUM 28 DAY COMPRESSIVE STRENGTH OF 141 kg/cm² (2,000 PSI).

5. GROUT SHALL CONFORM TO ASTM C 476, FINE TYPE, AND SHALL HAVE A MINIMUM 28 DAY COMPRESSIVE STRENGTH OF 176 kg/cm² (2500 PSI).

6. BONDING METHODS, TIES, AND ACCESSORIES SHALL BE APPROVED BY THE ENGINEER.

7. CMU MASONRY DETAILS, ELEVATIONS AND NOTES APPLY TO ALL CMU EXTERIOR AND INTERIOR WALLS U.N.O. EXTERIOR AND INTERIOR WALLS CONSIST OF A SINGLE CMU WIDTH U.N.O.

8. VERTICAL REINFORCING SHALL EXTEND TO 50mm BELOW THE TOP OF THE CMU WALL.

9. REINFORCING BARS TO EXTEND 12 BAR DIAMETERS BUT NOT LESS THAN 300mm BEYOND BEND U.N.O.

10. AT OPENINGS WIDER THAN 300mm IN CMU WALLS, PROVIDE CMU LINTELS PER TYPICAL CMU LINTEL DETAIL U.N.O. AND ADDITIONAL REINFORCING FULL HEIGHT AT JAMBS DETAIL.

11. REINFORCING BARS SHALL CONFORM TO ASTM A 615, GRADE 60. MINIMUM YIELD STRENGTH FY = 4218 kg/cm²

12. ALL REINFORCEMENT IN MASONRY WALLS SHALL BE SPLICED IN ACCORDANCE WITH THE FOLLOWING TABLE:

MASONRY LAP AND EMBEDMENT SCHEDULE

MINIMUM REBAR SPLICE LENGTHS IN MASONRY: fy=4218kg/CM² f'y=105kg/cm²

BAR SIZE	LAP
10 ø	400
12 ø	525
16 ø	650
20 ø	1025
22 ø	1350
25 ø	2025

13. CONCRETE MASONRY UNITS SHALL BE LAID IN RUNNING (COMMON) BOND, U.N.O.

14. ALL WALLS CONSTRUCTED OF CONCRETE MASONRY BLOCKS SHALL BE REINFORCED VERTICALLY AS INDICATED ON THE STRUCTURAL DRAWINGS. REINFORCEMENT SHALL BE LOCATED IN THE CENTER OF WALL U.N.O. BAR POSITIONERS SHALL BE SUPPLIED FOR VERTICAL REINFORCING. SPLICE VERTICAL BARS PER WALL SECTION DETAIL AND TIE WITH ANNEALED WIRE. FILL ALL CELLS WITH GROUT (ASTM C 476). GROUT CELLS IN MAXIMUM LIFT HEIGHT OF 1200mm. ALL REINFORCED CMU SHALL BE TWO–CELL UNITS.

15. FOR MASONRY FINISHING, SEE ARCHITECTURAL DRAWINGS.

UNLESS OTHERWISE NOTED, LINEAR DIMENSIONS SHOWN ARE IN MILLIMETERS.

NOTE: A3 SIZE REDUCED TO HALF SCALE.

BID DOCUMENT SUBMITTAL

This project was made possible by the United States Agency for International Development and the generous support of the American People through USAID Global Architecture and Engineering IQC Contracts.

SYMB	SUBMITTAL/REVISION DESCRIPTION	DATE	APR
B	BID DOCUMENT SUBMITTAL	09/26/10	SGW
A	95% DESIGN SUBMITTAL	08/19/10	SGW

DESIGNED BY: RB DATE: 09–26–10
DRAWN BY: SL SUBMITTED BY: TETRA TECH
CHECKED BY: APL CAD FILE NAME: LT0006–S–02

USAID FROM THE AMERICAN PEOPLE

A E S P

USAID – OIEE
SARDAR GIRLS HIGH SCHOOL
KABUL, AFGHANISTAN

STRUCTURAL GENERAL NOTES
SHEET 2 OF 2

SHEET REFERENCE NUMBER:
LT0006
S–02

Z:\127–1298–10001\Work Orders\WO–LT\WO–LT–0006 SGHS Utility Design\CAD\Conceptual\Structural\DWG\LT0006–S–02.dwg 9/25/2010 2:41:52 PM Koethe, Eric

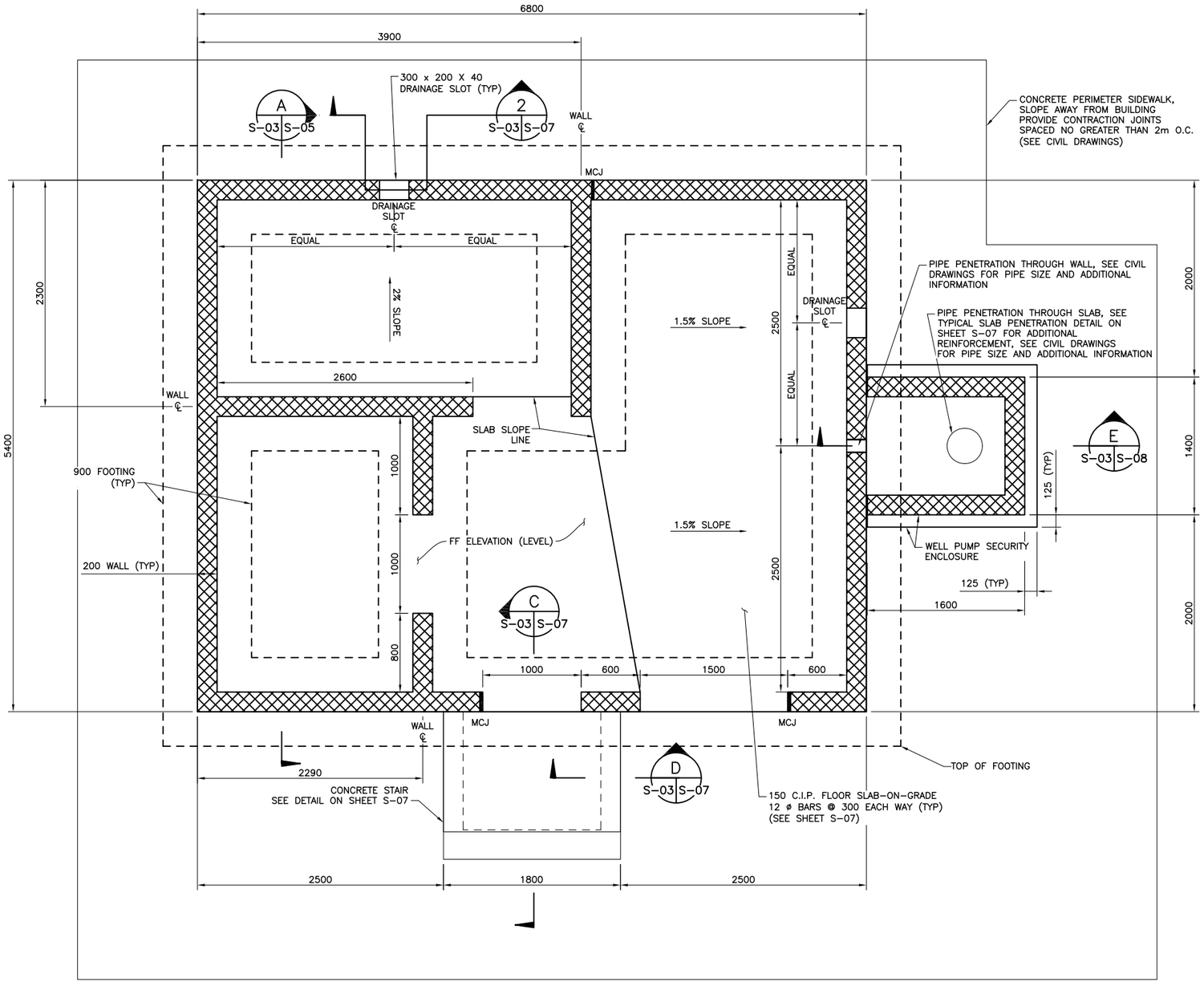

NOTE: TOP OF FOOTING (TYP U.N.O.) = 1822.50m
TOP OF WELL ENCLOSE FOOTING = 1822.995m
TOP OF PEDESTAL = 1823.30m

FOUNDATION PLAN

SCALE 1:25

UNLESS OTHERWISE NOTED, LINEAR DIMENSIONS SHOWN ARE IN MILLIMETERS.

1 .50 0 1 1.5
1:25
NOTE: A3 SIZE REDUCED TO HALF SCALE.

BID DOCUMENT SUBMITTAL

This project was made possible by the United States Agency for International Development and the generous support of the American People through USAID Global Architecture and Engineering IQC Contracts.

SYMB	SUBMITTAL/REVISION DESCRIPTION	DATE	APR
B	BID DOCUMENT SUBMITTAL	09/26/10	SGW
A	95% DESIGN SUBMITTAL	08/19/10	SGW

DESIGNED BY: FPH
DATE: 09-26-10
DRAWN BY: SL
SUBMITTED BY: TETRA TECH
CHECKED BY: SGW
CAD FILE NAME: LT0006-S-03

USAID FROM THE AMERICAN PEOPLE

A E S P

USAID – OIEE
SARDAR GIRLS HIGH SCHOOL
KABUL, AFGHANISTAN
WELL BUILDING
FOUNDATION PLAN

SHEET REFERENCE NUMBER:
LT0006
S-03

Z:\127-1298-10001\Work Orders\WO-LT\WO-LT-0006 SGHS Utility Design\CAD\Conceptual\Structural\DWG\LT0006-S-03.dwg 9/25/2010 2:45:08 PM Koethe, Eric

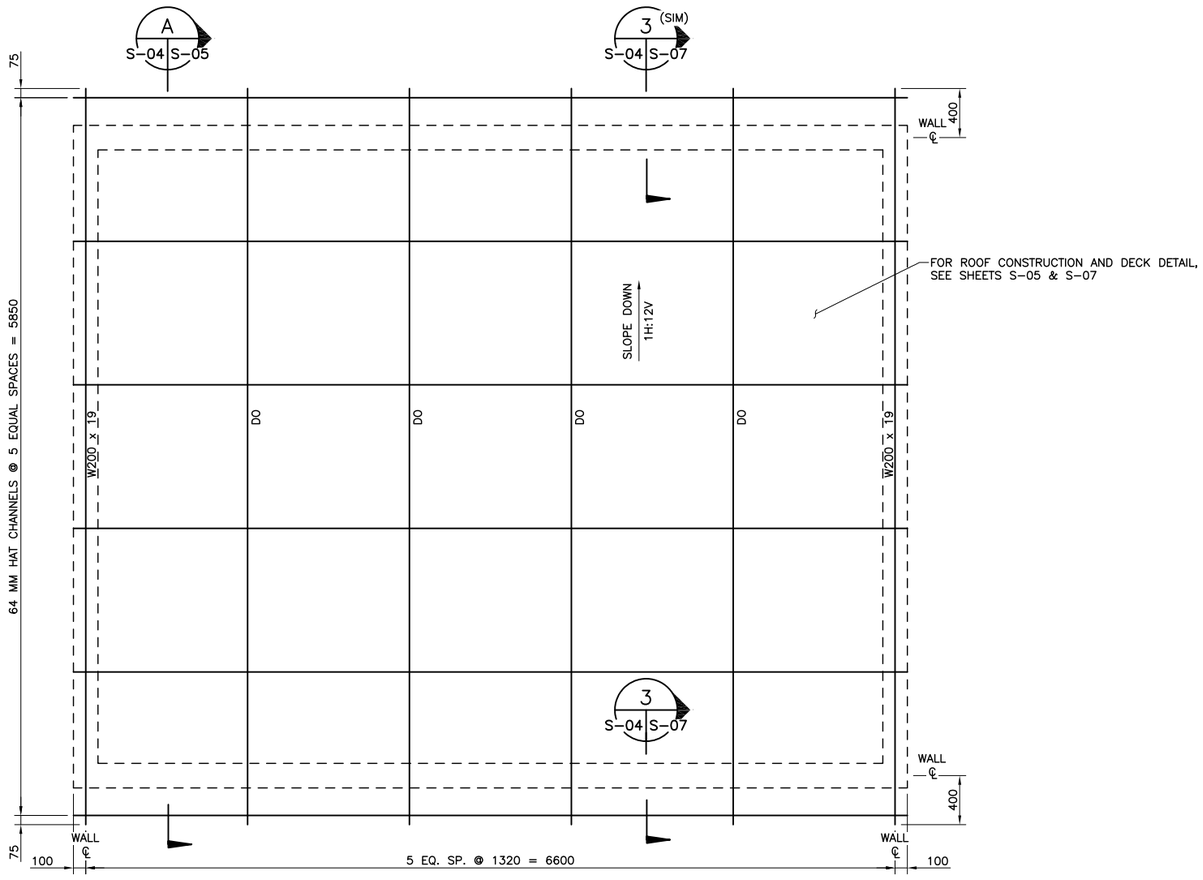

NOTE:
SEE SHEET S-05 FOR STEEL CHANNEL AND CEILING TUBE SPACING.

ROOF FRAMING PLAN
SCALE 1:25

NOTES:

1. BOLT END BEAMS TO WALL WITH HOLD DOWN ANCHORS @ 1500 MAX SPACING.
2. CONNECT ROOF BEAM TO INTERIOR WALL WITH ONE HOLD DOWN BOLT AT EACH INTERSECTION.

UNLESS OTHERWISE NOTED, LINEAR DIMENSIONS SHOWN ARE IN MILLIMETERS.

1 .50 0 1 1.5
1:25
NOTE: A3 SIZE REDUCED TO HALF SCALE.

BID DOCUMENT SUBMITTAL

SYMB	SUBMITTAL/REVISION DESCRIPTION	DATE	APR
B	BID DOCUMENT SUBMITTAL	09/26/10	SGW
A	95% DESIGN SUBMITTAL	08/19/10	SGW

This project was made possible by the United States Agency for International Development and the generous support of the American People through USAID Global Architecture and Engineering IQC Contracts.

DESIGNED BY: FPH
DATE: 09-26-10
DRAWN BY: SL
SUBMITTED BY: TETRA TECH
CHECKED BY: SGW
CAD FILE NAME: LT0006-S-04

USAID FROM THE AMERICAN PEOPLE

A E S P

USAID – OIEE
SARDAR GIRLS HIGH SCHOOL
KABUL, AFGHANISTAN
WELL BUILDING
ROOF FRAMING PLAN

SHEET REFERENCE NUMBER:
LT0006 S-04

Z:\127-1298-10001\Work Orders\WO-LT\WO-LT-0006 SGHS Utility Design\CAD\Conceptual\Structural\DWG\LT0006-S-04.dwg 9/25/2010 2:46:35 PM Koethe, Eric

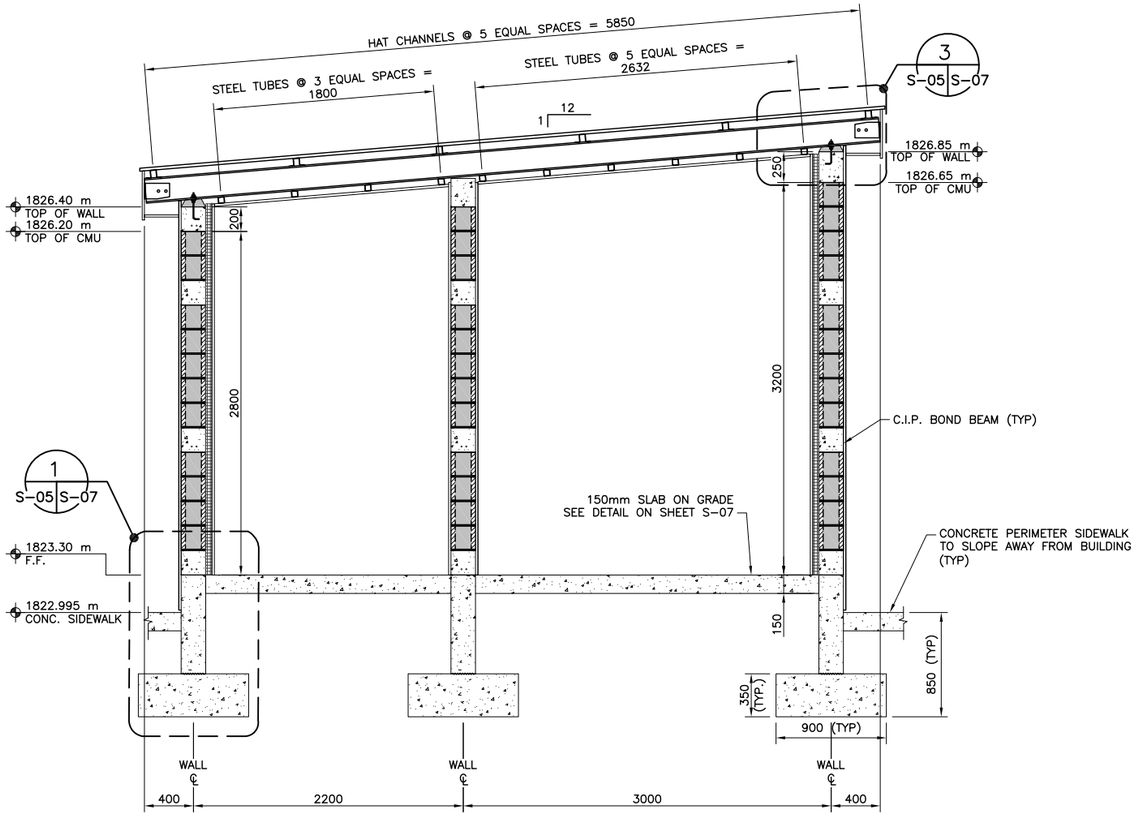

SECTION A
SCALE 1:25 S-03, S-04 S-05

UNLESS OTHERWISE NOTED, LINEAR DIMENSIONS SHOWN ARE IN MILLIMETERS.

1 .50 0 1 1.5
1:25
NOTE: A3 SIZE REDUCED TO HALF SCALE.

BID DOCUMENT SUBMITTAL

This project was made possible by the United States Agency for International Development and the generous support of the American People through USAID Global Architecture and Engineering IQC Contracts.

SYMB	SUBMITTAL/REVISION DESCRIPTION	DATE	APR
B	BID DOCUMENT SUBMITTAL	09/26/10	SGW
A	95% DESIGN SUBMITTAL	08/19/10	SGW

DESIGNED BY: FPH
DATE: 09-26-10
DRAWN BY: SL
SUBMITTED BY: TETRA TECH
CHECKED BY: SGW
CAD FILE NAME: LT0006-S-05

USAID FROM THE AMERICAN PEOPLE

A E S P

USAID – OIEE
SARDAR GIRLS HIGH SCHOOL
KABUL, AFGHANISTAN
WELL BUILDING
SECTION

SHEET REFERENCE NUMBER:
LT0006
S-05

Z:\127-1298-10001\Work Orders\WO-LT\WO-LT-0006 SGHS Utility Design\CAD\Conceptual\Structural\DWG\LT0006-S-05.dwg 9/25/2010 2:47:37 PM Koethe, Eric

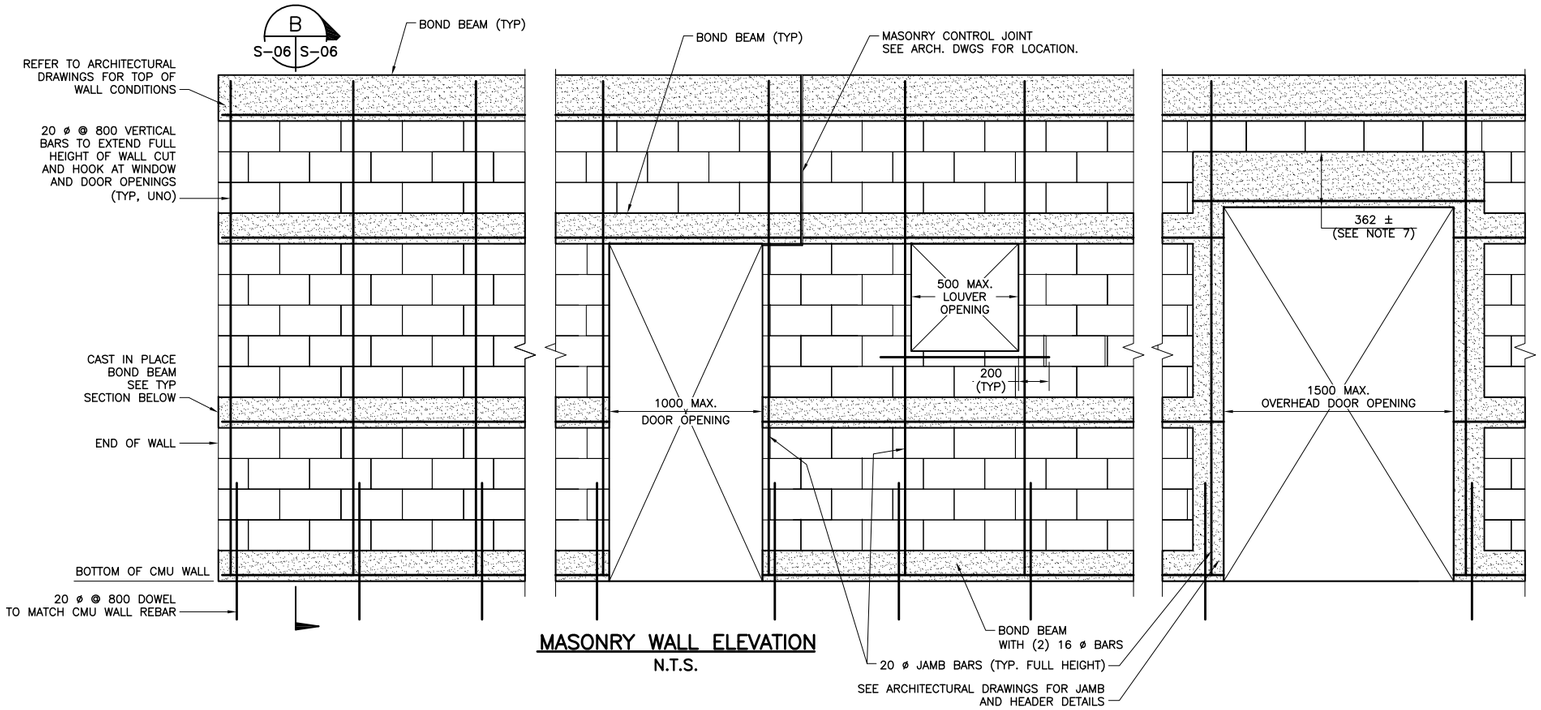

MASONRY WALL ELEVATION
N.T.S.

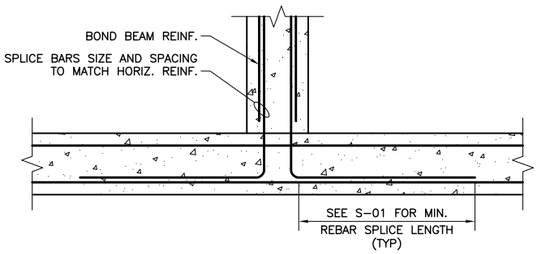

NOTE: SEE CONCRETE BOND BEAM/LINTEL NOTES 1 AND 2 BELOW.

BOND BEAM INTERSECTION
SCALE 1:10

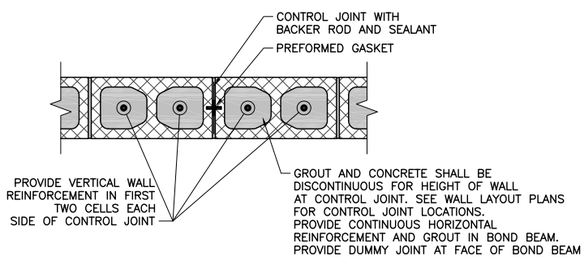

CONTROL JOINT DETAIL AT STRAIGHT WALL
SCALE 1:10

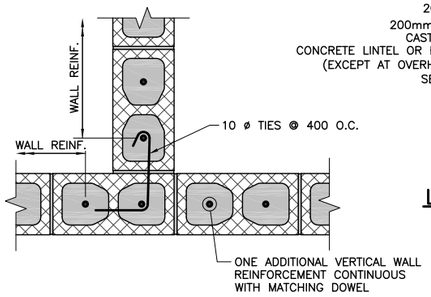

TYPICAL CMU WALL INTERSECTION
SCALE 1:10

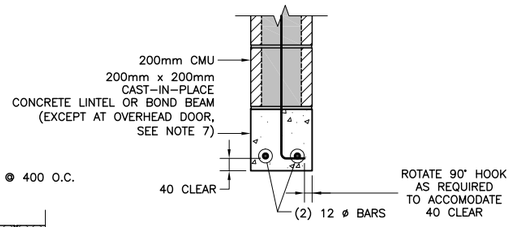

LINTEL/BOND BEAM DETAIL
SCAI F 1:10

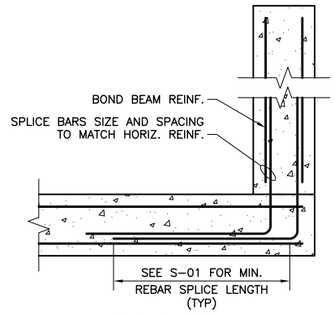

BOND BEAM CORNER AND END WALL
SCALE 1:10

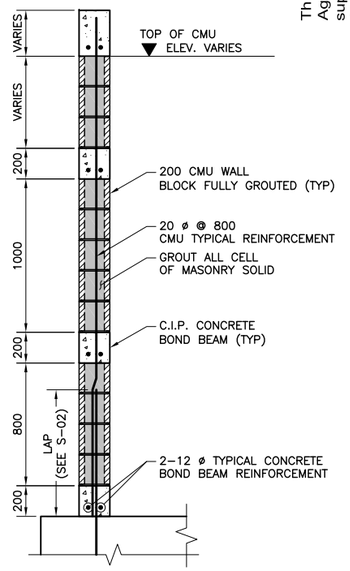

TYPICAL CMU WALL WITH BOND BEAM SECTION
SCALE 1:20

B
S-06 S-06

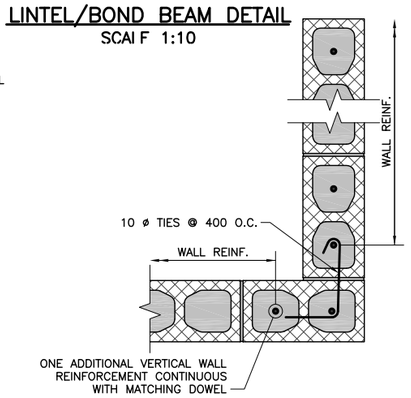

NOTE: ALL MASONRY UNIT CELLS SHALL BE GROUTED FULLY.

TYPICAL CMU WALL CORNER
SCALE 1:10

CONCRETE BOND BEAM/LINTEL NOTES:

1. PROVIDE 200 MINIMUM BEARING AT EACH SIDE OF CLEAR SPAN (TYP).
2. PROVIDE 400 MIN BEARING AT EACH SIDE FOR OPENING LARGER THAN 1750mm.
3. IF FULL 200mm LINTEL BEARING LENGTH IS NOT AVAILABLE, EXTEND THE LINTEL AS FAR AS POSSIBLE, PROVIDING A 90° HOOK AT THE END OF THE HORIZONTAL REINFORCEMENT.
4. VERTICAL REINFORCEMENT SHALL BE CONTINUOUS THROUGH BOND BEAMS AND LINTELS.
5. CONTROL JOINTS SHALL NOT PASS THROUGH LINTELS. AT LINTELS, OFFSET CONTROL JOINT TO THE END OF REQUIRED LINTEL BEARING AREA.
6. REFER TO ARCH. AND MECH DRAWINGS FOR LOCATIONS OF MASONRY OPENINGS U.N.O.
7. LINTEL DEPTH ABOVE OVERHEAD DOOR BASED ON DOOR SIZE ASSUMED DURING DESIGN. ACTUAL DEPTH MAY VARY BASED ON SELECTED OVERHEAD DOOR.

UNLESS OTHERWISE NOTED, LINEAR DIMENSIONS SHOWN ARE IN MILLIMETERS.

1 .50 0 1
1:20
0 .50 1.00
1:10
NOTE: A3 SIZE REDUCED TO HALF SCALE.

BID DOCUMENT SUBMITTAL

SYMB	SUBMITTAL/REVISION DESCRIPTION	DATE	APR
B	BID DOCUMENT SUBMITTAL	09/26/10	SGW
A	95% DESIGN SUBMITTAL	08/19/10	SGW

This project was made possible by the United States Agency for International Development and the generous support of the American People through USAID Global Architecture and Engineering IQC Contracts.

DESIGNED BY: FPH
DRAWN BY: SL
CHECKED BY: SGW
DATE: 09-26-10
SUBMITTED BY: TETRA TECH
CAD FILE NAME: LT0006-S-06

USAID FROM THE AMERICAN PEOPLE

A E S P

USAID – OIEE
SARDAR GIRLS HIGH SCHOOL
KABUL, AFGHANISTAN
WELL BUILDING
TYPICAL CMU WALL DETAILS

SHEET REFERENCE NUMBER:
LT0006
S-06

Z:\127-1298-10001\Work Orders\WO-LT\WO-LT-0006 SGHS Utility Design\CAD\Conceptual\Structural\DWG\LT0006-S-06.dwg 9/25/2010 2:48:40 PM Koethe, Eric

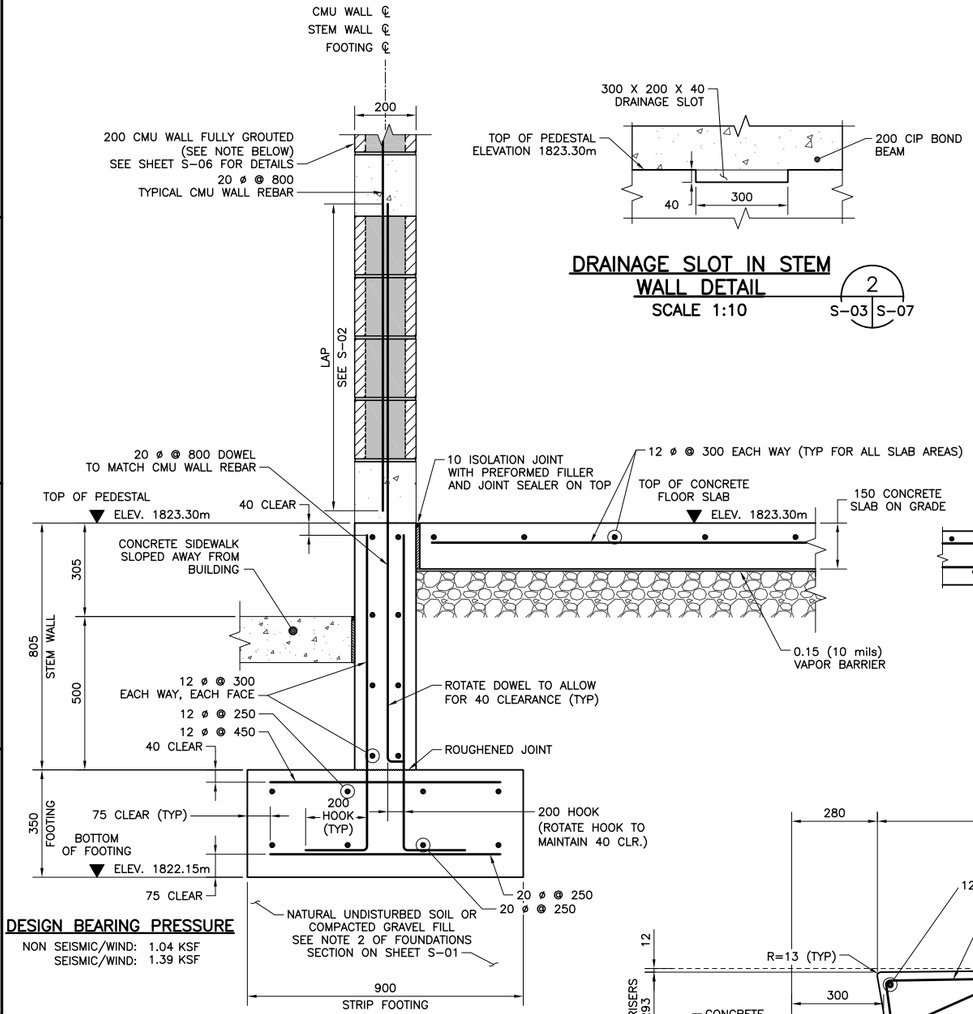

DESIGN BEARING PRESSURE

NON SEISMIC/WIND: 1.04 KSF
SEISMIC/WIND: 1.39 KSF

STRIP FOOTING DETAIL 1 (S-05 | S-07)
SCALE 1:10

DRAINAGE SLOT IN STEM WALL DETAIL 2 (S-03 | S-07)
SCALE 1:10

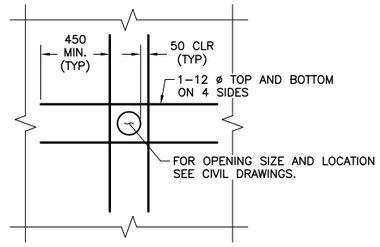

TYPICAL ADDITIONAL SLAB REBARS AROUND PIPE PENETRATION DETAIL
SCALE 1:20

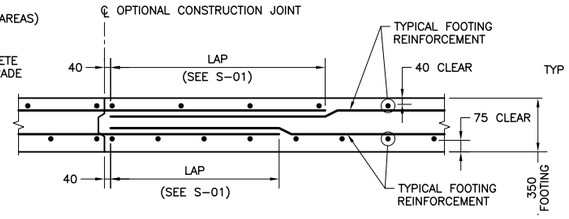

FOOTING'S OPTIONAL CONSTRUCTION JOINT DETAIL SECTION
SCALE 1:20

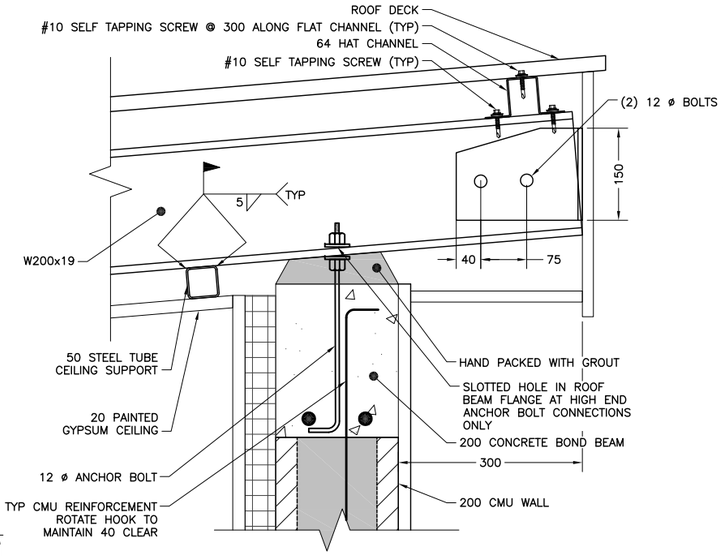

ROOF BEAM DETAIL 3 (S-04, S-05 | S-07)
SCALE 1:5

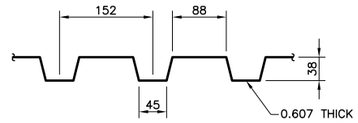

ROOF DECK DETAIL
SCALE 1:5

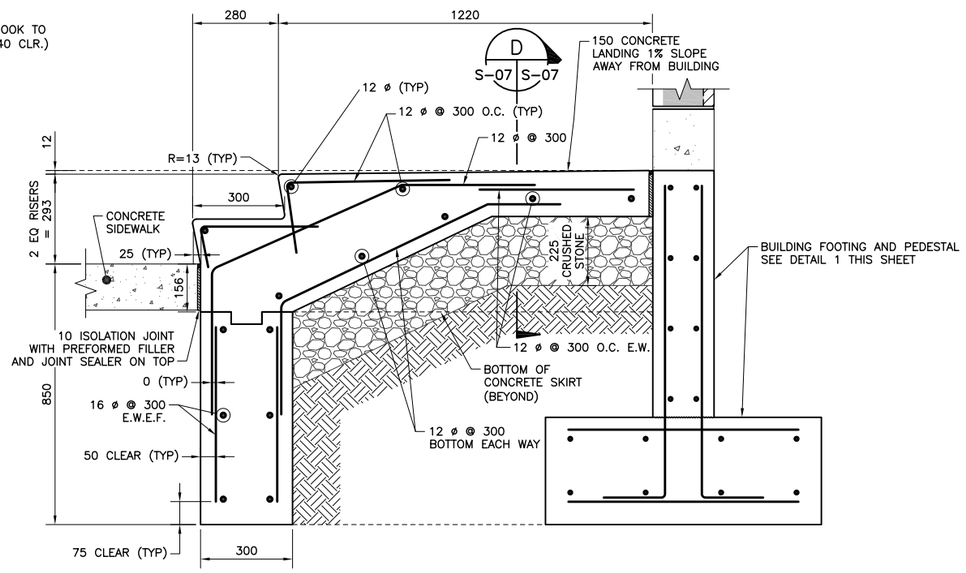

CONCRETE STAIR AND LANDING SECTION C (S-03 | S-07)
SCALE 1:10

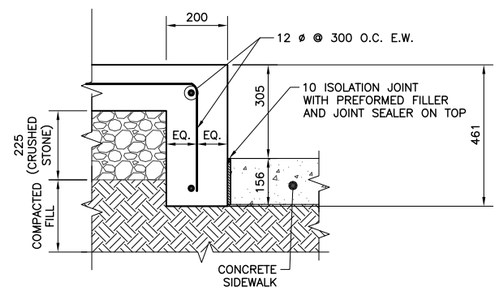

NOTE:
CONCRETE SKIRT TYPICAL ON BOTH SIDES OF STAIR.

CONCRETE STAIR AND LANDING SKIRT SECTION D (S-03, S-07 | S-07)
SCALE 1:10

UNLESS OTHERWISE NOTED, LINEAR DIMENSIONS SHOWN ARE IN MILLIMETERS.

1:20 — 1 .50 0 1
1:10 — 0 .50 1.00
1:5 — 0 .10 .20 .30 .40 .50

NOTE: A3 SIZE REDUCED TO HALF SCALE.

BID DOCUMENT SUBMITTAL

SYMB	SUBMITTAL/REVISION DESCRIPTION	DATE	APR
B	BID DOCUMENT SUBMITTAL	09/26/10	SGW
A	95% DESIGN SUBMITTAL	08/19/10	SGW

This project was made possible by the United States Agency for International Development and the generous support of the American People through USAID Global Architecture and Engineering IQC Contracts.

DESIGNED BY: FPH
DATE: 09-26-10
DRAWN BY: SL
SUBMITTED BY: TETRA TECH
CHECKED BY: SGW
CAD FILE NAME: LT0006-S-07

USAID FROM THE AMERICAN PEOPLE

A E S P

USAID – OIEE
SARDAR GIRLS HIGH SCHOOL
KABUL, AFGHANISTAN
WELL BUILDING
ROOF AND FOUNDATION DETAILS

SHEET REFERENCE NUMBER:
LT0006 S-07

Z:\127-1298-10001\Work Orders\WO-LT\WO-LT-0006 SGHS Utility Design\CAD\Conceptual\Structural\DWG\LT0006-S-07.dwg 9/25/2010 2:49:48 PM Koethe, Eric

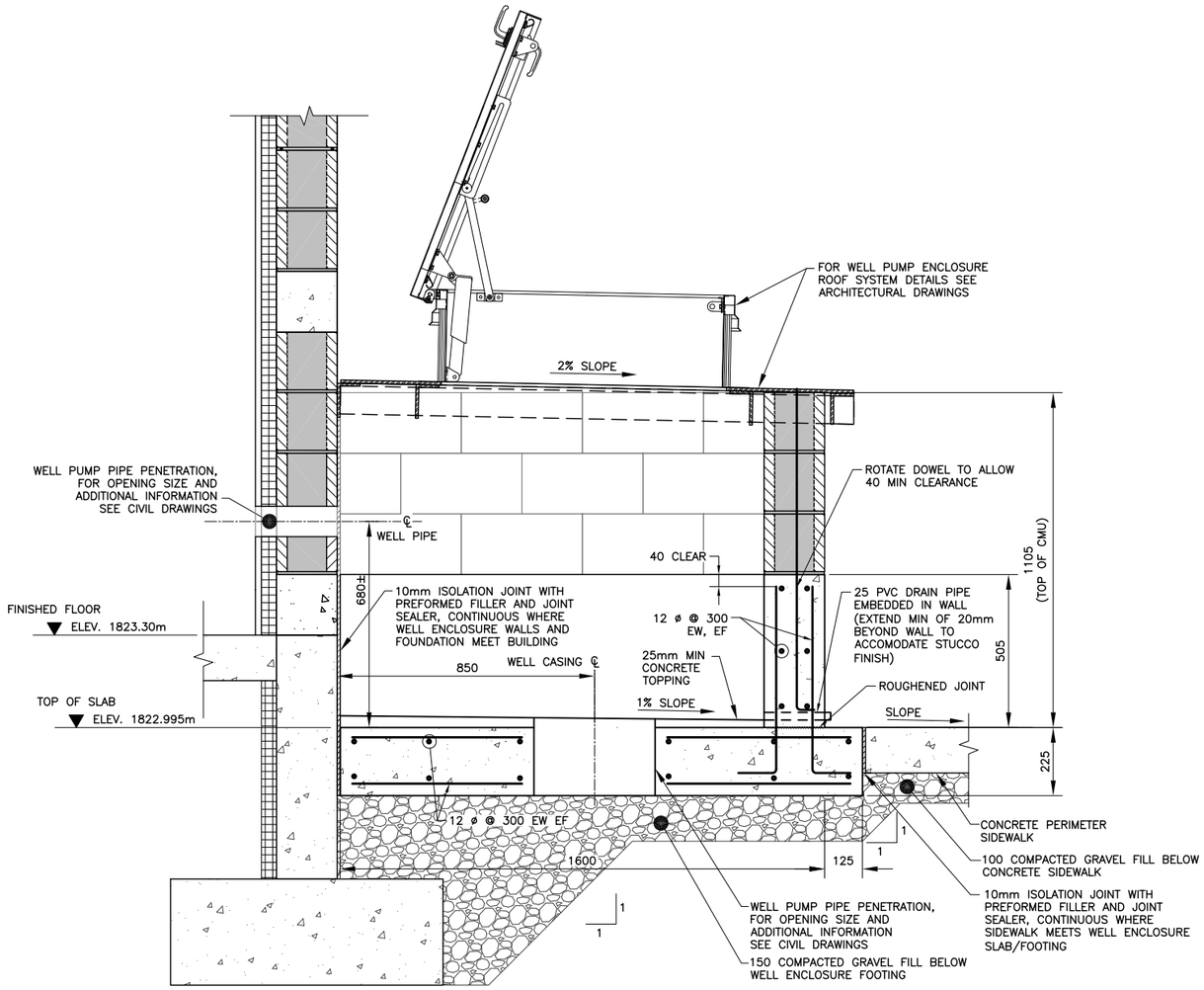

NOTE:

1. PIPING AND WELL PUMP NOT SHOWN FOR CLARITY.

WELL PUMP SECURITY ENCLOSURE SECTION

SCALE 1:10

E
S-03 S-08

UNLESS OTHERWISE NOTED, LINEAR DIMENSIONS SHOWN ARE IN MILLIMETERS.

0 .50 1.00
1:10
NOTE: A3 SIZE REDUCED TO HALF SCALE.

BID DOCUMENT SUBMITTAL

SYMB	SUBMITTAL/REVISION DESCRIPTION	DATE	APR
B	BID DOCUMENT SUBMITTAL	09/26/10	SGW
A	95% DESIGN SUBMITTAL	08/19/10	SGW

This project was made possible by the United States Agency for International Development and the generous support of the American People through USAID Global Architecture and Engineering IQC Contracts.

DESIGNED BY: FPH
DATE: 09-26-10
DRAWN BY: SL
SUBMITTED BY: TETRA TECH
CHECKED BY: SGW
CAD FILE NAME: LT0006-S-08

USAID FROM THE AMERICAN PEOPLE

A E S P

USAID – OIEE
SARDAR GIRLS HIGH SCHOOL
KABUL, AFGHANISTAN
WELL BUILDING
WELL PUMP SECURITY ENCLOSURE DETAIL

SHEET REFERENCE NUMBER:
LT0006
S-08

Z:\127-1298-10001\Work Orders\WO-LT\WO-LT-0006 SGHS Utility Design\CAD\Conceptual\Structural\DWG\LT0006-S-08.dwg 9/25/2010 2:51:04 PM Koethe, Eric

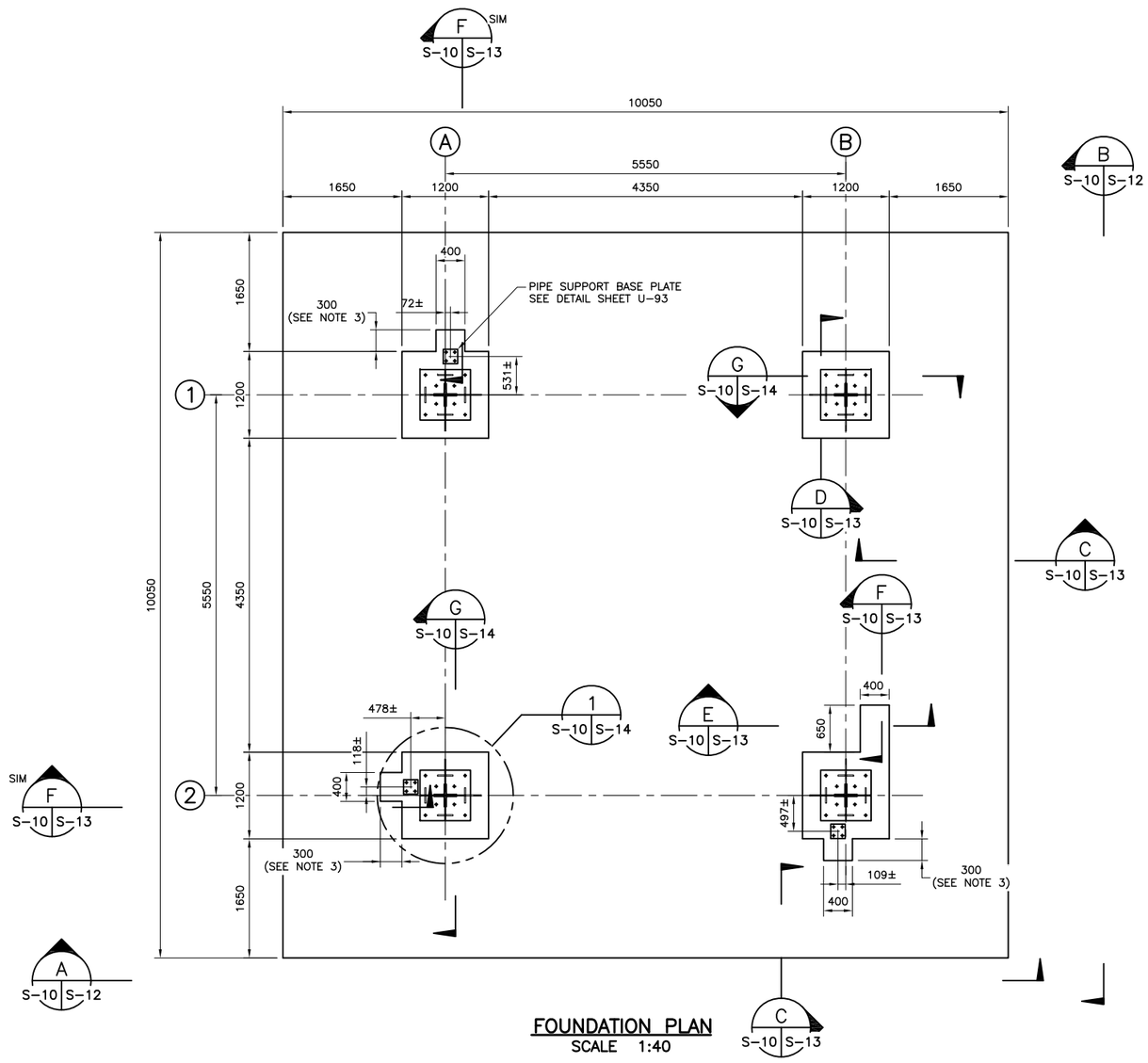

FOUNDATION PLAN
SCALE 1:40

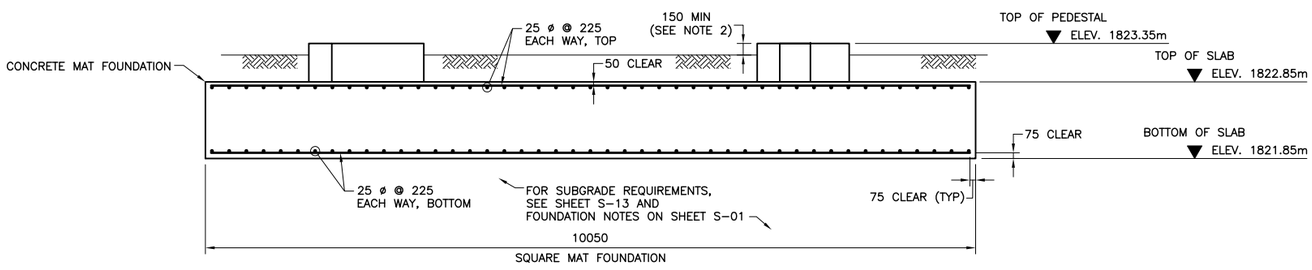

FOUNDATION SECTION
SCALE 1:40

NOTES:

1. FOR GENERAL NOTES, SEE SHEETS S-01 & S-02.
2. THE ACTUAL SOIL HEIGHT MAY VARY. THE FINAL GRADING SHALL PROVIDE A MINIMUM OF 1000mm FROM THE BOTTOM OF MAT TO THE TOP OF GRADE.
3. PEDESTAL EXTENSION AT PIPE SUPPORTS IS 400Wx300L (TYPICAL) FOR EASE OF CONSTRUCTION. CONTRACTOR MAY ADJUST PEDESTAL EXTENSION LENGTH AT PIPE SUPPORTS, IF DESIRED, PROVIDED THAT A MINIMUM OF 250MM IS PROVIDED TO THE EDGE OF THE PIPE SUPPORT BASE PLATE.
4. DESIGN PIPE SUPPORT LOCATIONS SHOWN "±", ACTUAL PIPE SUPPORT LOCATIONS MAY VARY. CONTRACTOR TO COORDINATE ACTUAL PIPE SUPPORT LOCATIONS WITH FINAL TANK AND PIPE LAYOUT.

UNLESS OTHERWISE NOTED, LINEAR DIMENSIONS SHOWN ARE IN MILLIMETERS.

0 .5 1 2 3 4
1:40
NOTE: A3 SIZE REDUCED TO HALF SCALE.

BID DOCUMENT SUBMITTAL

This project was made possible by the United States Agency for International Development and the generous support of the American People through USAID Global Architecture and Engineering IQC Contracts.

SYMB	SUBMITTAL/REVISION DESCRIPTION	DATE	APR
B	BID DOCUMENT SUBMITTAL	09/26/10	SGW
A	95% DESIGN SUBMITTAL	08/19/10	SGW

DESIGNED BY: RB
DATE: 09-26-10
DRAWN BY: GPV
SUBMITTED BY: TETRA TECH
CHECKED BY: APL
CAD FILE NAME: LT0006-S-10

USAID FROM THE AMERICAN PEOPLE

A E S P

USAID – OIEE
SARDAR GIRLS HIGH SCHOOL
KABUL, AFGHANISTAN
WATER TOWER
FOUNDATION PLAN

SHEET REFERENCE NUMBER:
LT0006
S-10

Z:\127-1298-10001\Work Orders\WO-LT\WO-LT-0006 SGHS Utility Design\CAD\Conceptual\Structural\DWG\LT0006-S-10.dwg 9/25/2010 2:52:23 PM Koethe, Eric

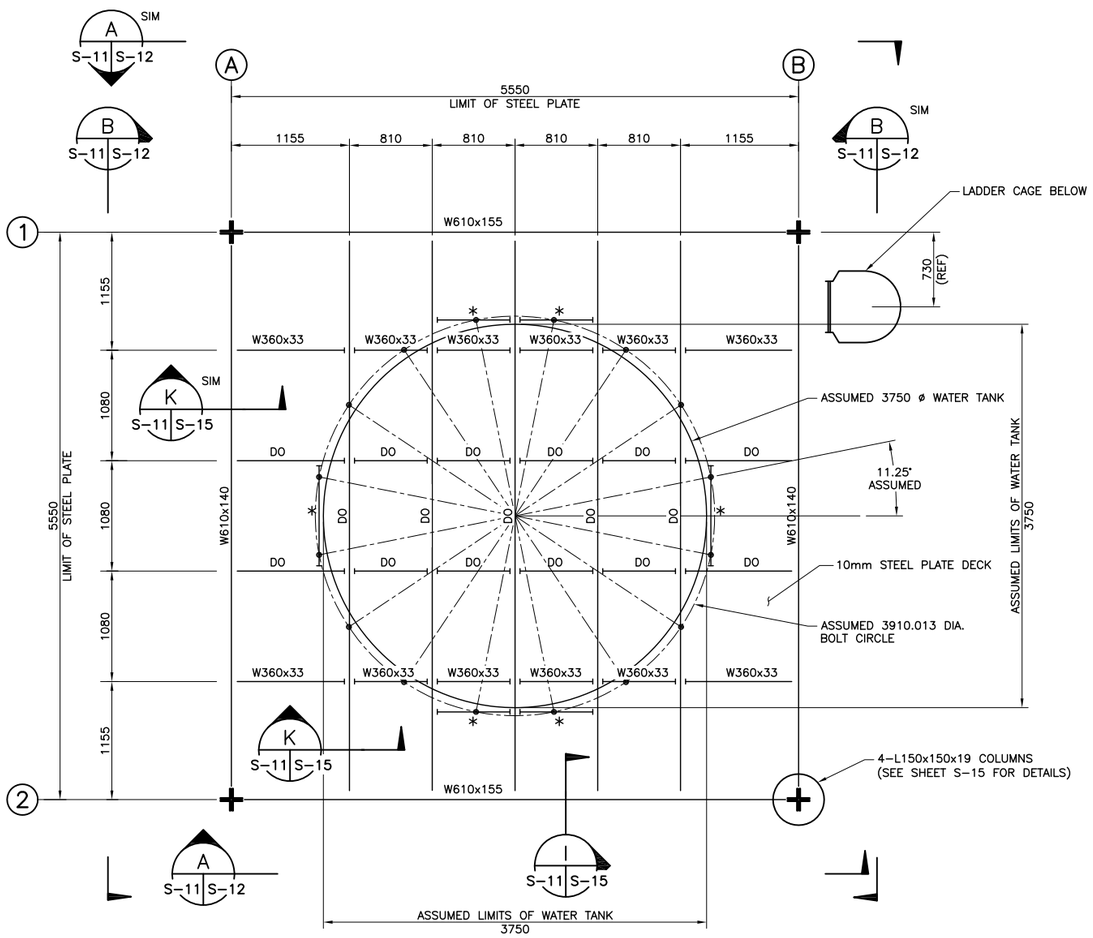

* ADDITIONAL FRAMING MEMBERS SHALL BE PROVIDED BASED ON FINAL TANK ANCHOR BOLT CONFIGURATION AND MANUFACTURER'S RECOMMENDATIONS.

PLATFORM FRAMING PLAN
SCALE 1:30

NOTE:

1. PLATFORM TOP OF STEEL BEAM ELEV. 1838.35m
   TOP OF STEEL PLATE ELEV. 1838.36m.

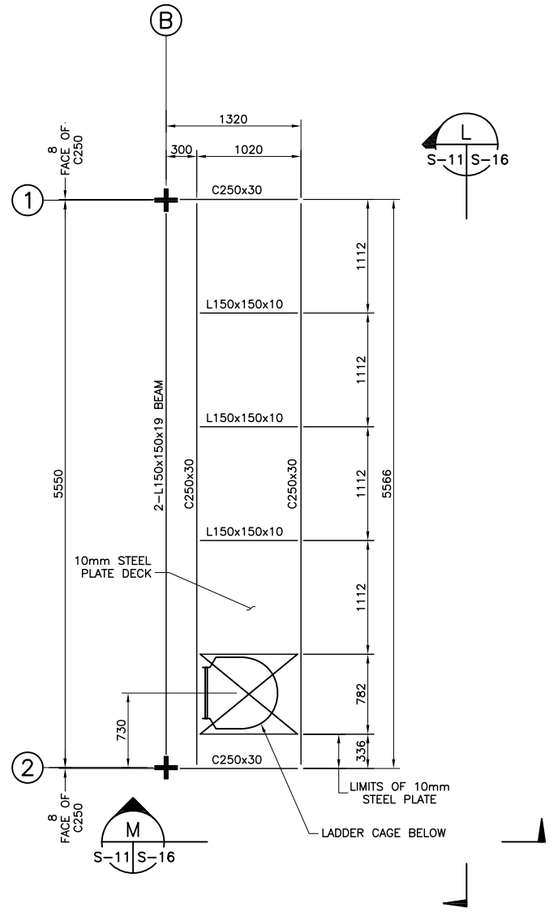

CATWALK FRAMING PLAN
SCALE 1:30

NOTE:

1. CATWALK TOP OF STEEL ELEV. 1838.302m

NOTES:

1. DIMENSIONS ON W SHAPES ARE MEASURED TO THE CENTERLINE MEMBERS. DIMENSIONS ON C AND L SHAPES ARE MEASURED TO THE OUTSIDE OF THE VERTICAL FACE OF THE WEB OR LEG.
2. STEEL PLATES SHALL BE FASTENED TO THE TOP FLANGE OF THE SUPPORTING BEAMS WITH 16 ø BOLTS AT A MAXIMUM SPACING OF 600mm, AT ALL LOCATIONS ON THE PLATFORM. COORDINATE BOLT LOCATIONS WITH TANK BASE CONNECTIONS PRIOR TO FABRICATION/PLACEMENT. SUBMIT A STEEL PLATE BOLTING LAYOUT AS A CONSTRUCTION SUBMITTAL FOR APPROVAL BY THE CONTRACTING OFFICER'S REPRESENTATIVE.
3. FOR THE PURPOSE OF DESIGN, THE WATER TANK WAS ASSUMED TO BE CYLINDRICAL WITH THE OVERALL DIMENSIONS OF 3750 ø x 6100 H.

UNLESS OTHERWISE NOTED, LINEAR DIMENSIONS SHOWN ARE IN MILLIMETERS.

1 .50 0 1 2
1:30
NOTE: A3 SIZE REDUCED TO HALF SCALE.

BID DOCUMENT SUBMITTAL

SYMB	SUBMITTAL/REVISION DESCRIPTION	DATE	APR
B	BID DOCUMENT SUBMITTAL	09/26/10	SGW
A	95% DESIGN SUBMITTAL	08/19/10	SGW

This project was made possible by the United States Agency for International Development and the generous support of the American People through USAID Global Architecture and Engineering IQC Contracts.

DESIGNED BY: RB
DATE: 09-26-10
DRAWN BY: GPV
SUBMITTED BY: TETRA TECH
CHECKED BY: APL
CAD FILE NAME: LT0006-S-11

USAID FROM THE AMERICAN PEOPLE

A E S P

USAID – OIEE
SARDAR GIRLS HIGH SCHOOL
KABUL, AFGHANISTAN
WATER TOWER
PLATFORM AND CATWALK
FRAMING PLAN

SHEET REFERENCE NUMBER:
LT0006
S-11

Z:\127-1298-10001\Work Orders\WO-LT\WO-LT-0006 SGHS Utility Design\CAD\Conceptual\Structural\DWG\LT0006-S-11.dwg 9/25/2010 2:54:18 PM Koethe, Eric

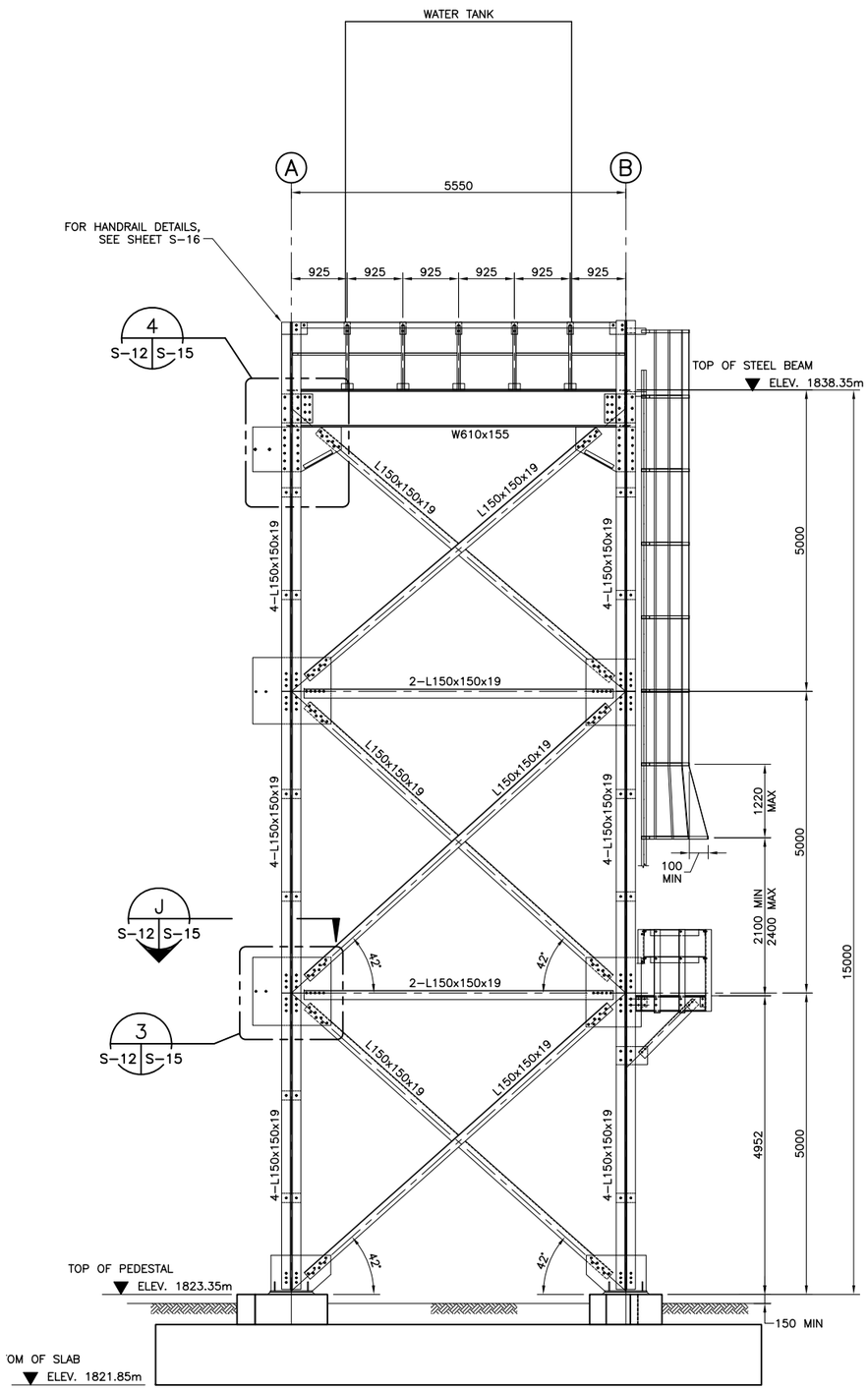

ELEVATION A
SCALE 1:50 S-10, S-11 S-12

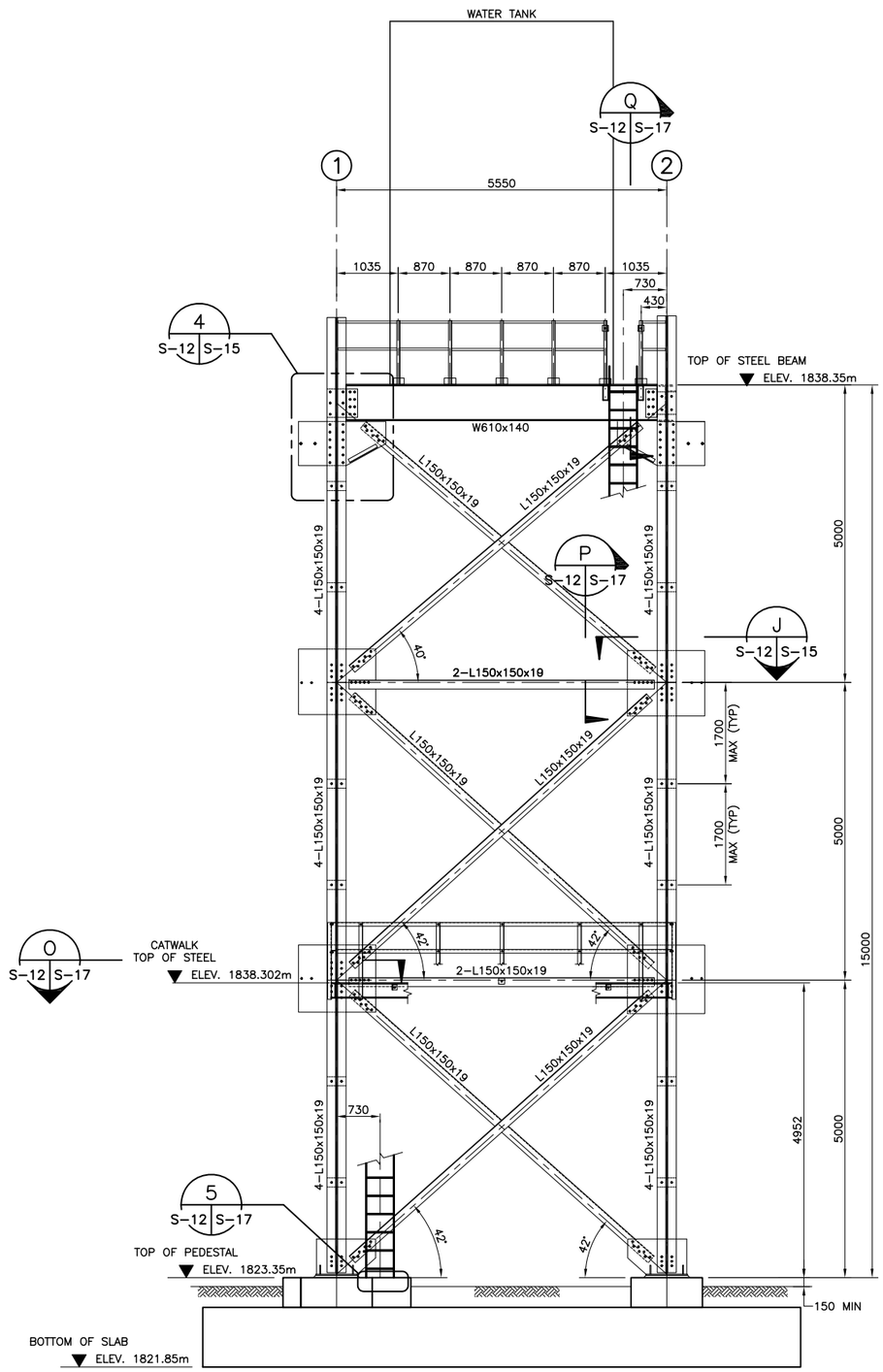

ELEVATION B
SCALE 1:50 S-10, S-11 S-12

UNLESS OTHERWISE NOTED, LINEAR DIMENSIONS SHOWN ARE IN MILLIMETERS.

NOTES:

1. DIMENSIONS ON W SHAPES ARE MEASURED TO THE CENTERLINE MEMBERS. DIMENSIONS ON C AND L SHAPES ARE MEASURED TO THE OUTSIDE OF THE VERTICAL FACE OF THE WEB OR LEG.
2. ALL STRUCTURAL STEEL AND BOLTS SHALL BE HOT DIP GALVANIZED, SEE SHEET S-02.

1 0 1 2 3 4
1:50
NOTE: A3 SIZE REDUCED TO HALF SCALE.

BID DOCUMENT SUBMITTAL

This project was made possible by the United States Agency for International Development and the generous support of the American People through USAID Global Architecture and Engineering IQC Contracts.

SYMB	SUBMITTAL/REVISION DESCRIPTION	DATE	APR
B	BID DOCUMENT SUBMITTAL	09/26/10	SGW
A	95% DESIGN SUBMITTAL	08/19/10	SGW

DESIGNED BY: RB
DRAWN BY: GPV
CHECKED BY: APL
DATE: 09-26-10
SUBMITTED BY: TETRA TECH
CAD FILE NAME: LT0006-S-12

USAID FROM THE AMERICAN PEOPLE

A E S P

USAID – OIEE
SARDAR GIRLS HIGH SCHOOL
KABUL, AFGHANISTAN
WATER TOWER
ELEVATIONS

SHEET REFERENCE NUMBER:
LT0006
S-12

Z:\127-1298-10001\Work Orders\WO-LT\WO-LT-0006 SGHS Utility Design\CAD\Conceptual\Structural\DWG\LT0006-S-12.dwg 9/25/2010 3:23:55 PM Koethe, Eric

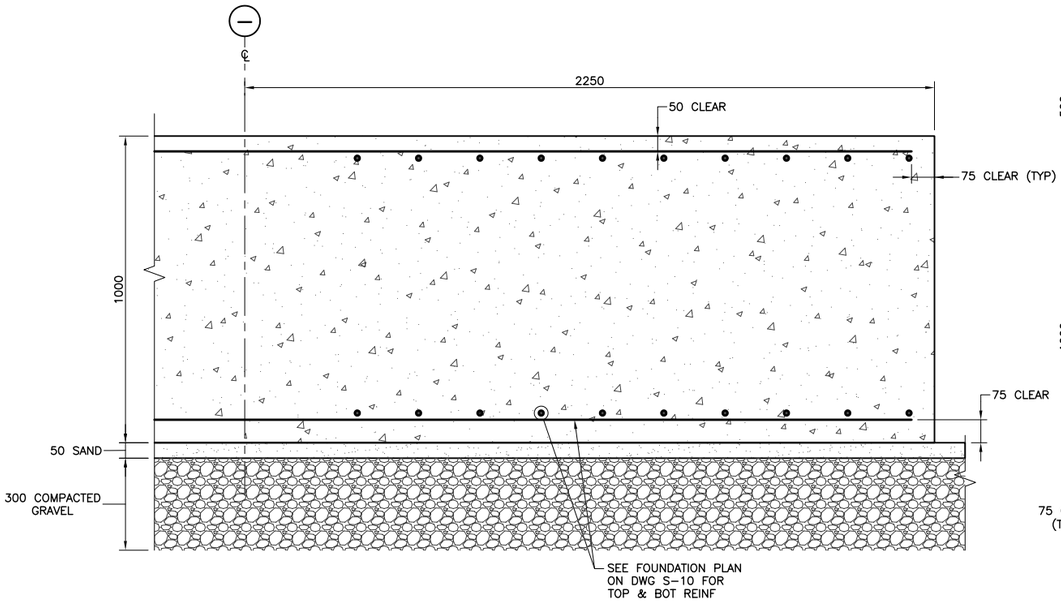

SECTION C S-10 | S-13
SCALE 1:10

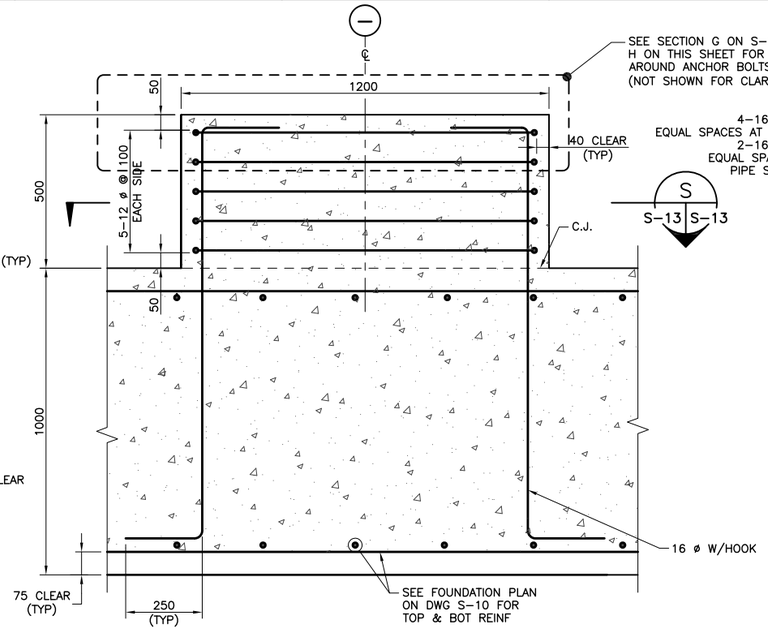

NOTE: ANCHORAGE OF STEEL COLUMN NOT SHOWN FOR CLARITY. SEE SHEET S-14 FOR DETAILS.

SECTION D S-10, S-13 | S-13
SCALE 1:10

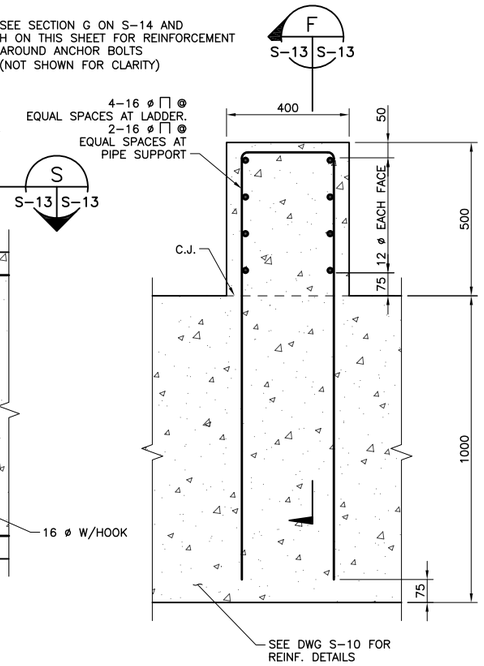

SECTION E S-10, S-13 | S-13
SCALE 1:10

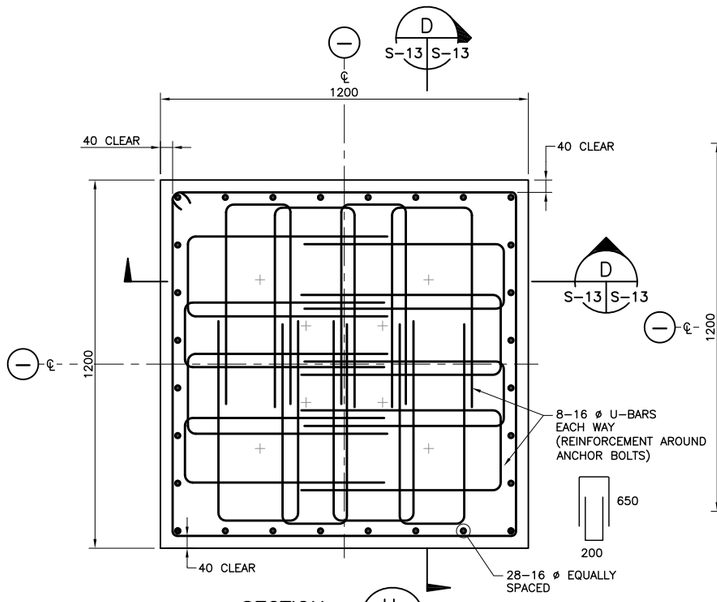

SECTION H S-14 | S-13
SCALE 1:10

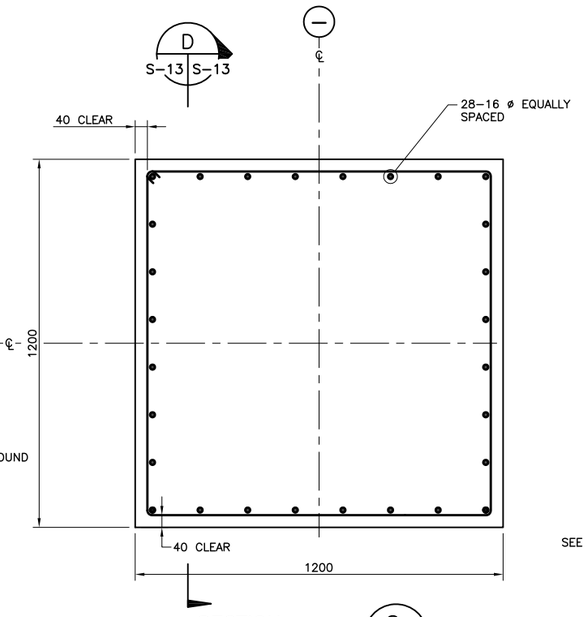

SECTION S S-13, S-14 | S-14
SCALE 1:10

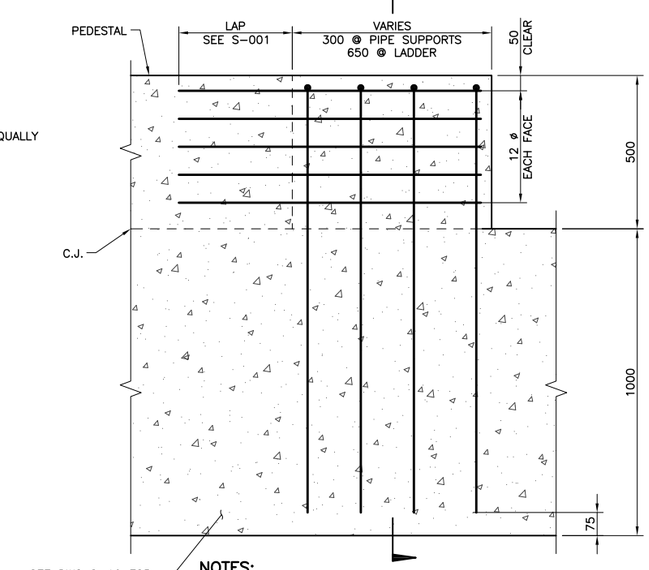

NOTES:

1. PEDESTAL AND FOOTING REINFORCEMENT NOT SHOWN FOR CLARITY.
2. SECTION SHOWN AT LADDER SUPPORT EXTENSION. SECTION AT PIPE SUPPORT EXTENSION SIMILAR.

SECTION F S-10, S-13 | S-13
SCALE 1:10

UNLESS OTHERWISE NOTED, LINEAR DIMENSIONS SHOWN ARE IN MILLIMETERS.

0 .50 1.00
1:10
NOTE: A3 SIZE REDUCED TO HALF SCALE.

BID DOCUMENT SUBMITTAL

SYMB	SUBMITTAL/REVISION DESCRIPTION	DATE	APR
B	BID DOCUMENT SUBMITTAL	09/26/10	SGW
A	95% DESIGN SUBMITTAL	08/19/10	SGW

This project was made possible by the United States Agency for International Development and the generous support of the American People through USAID Global Architecture and Engineering IQC Contracts.

DESIGNED BY: RB
DATE: 09-26-10
DRAWN BY: GPV
SUBMITTED BY: TETRA TECH
CHECKED BY: APL
CAD FILE NAME: LT0006-S-13

USAID FROM THE AMERICAN PEOPLE

A E S P

USAID – OIEE
SARDAR GIRLS HIGH SCHOOL
KABUL, AFGHANISTAN
WATER TOWER
FOUNDATION DETAILS
SHEET 1 OF 2

SHEET REFERENCE NUMBER:
LT0006
S-13

Z:\127-1298-10001\Work Orders\WO-LT\WO-LT-0006 SGHS Utility Design\CAD\Conceptual\Structural\DWG\LT0006-S-13.dwg 9/25/2010 3:20:20 PM Koethe, Eric

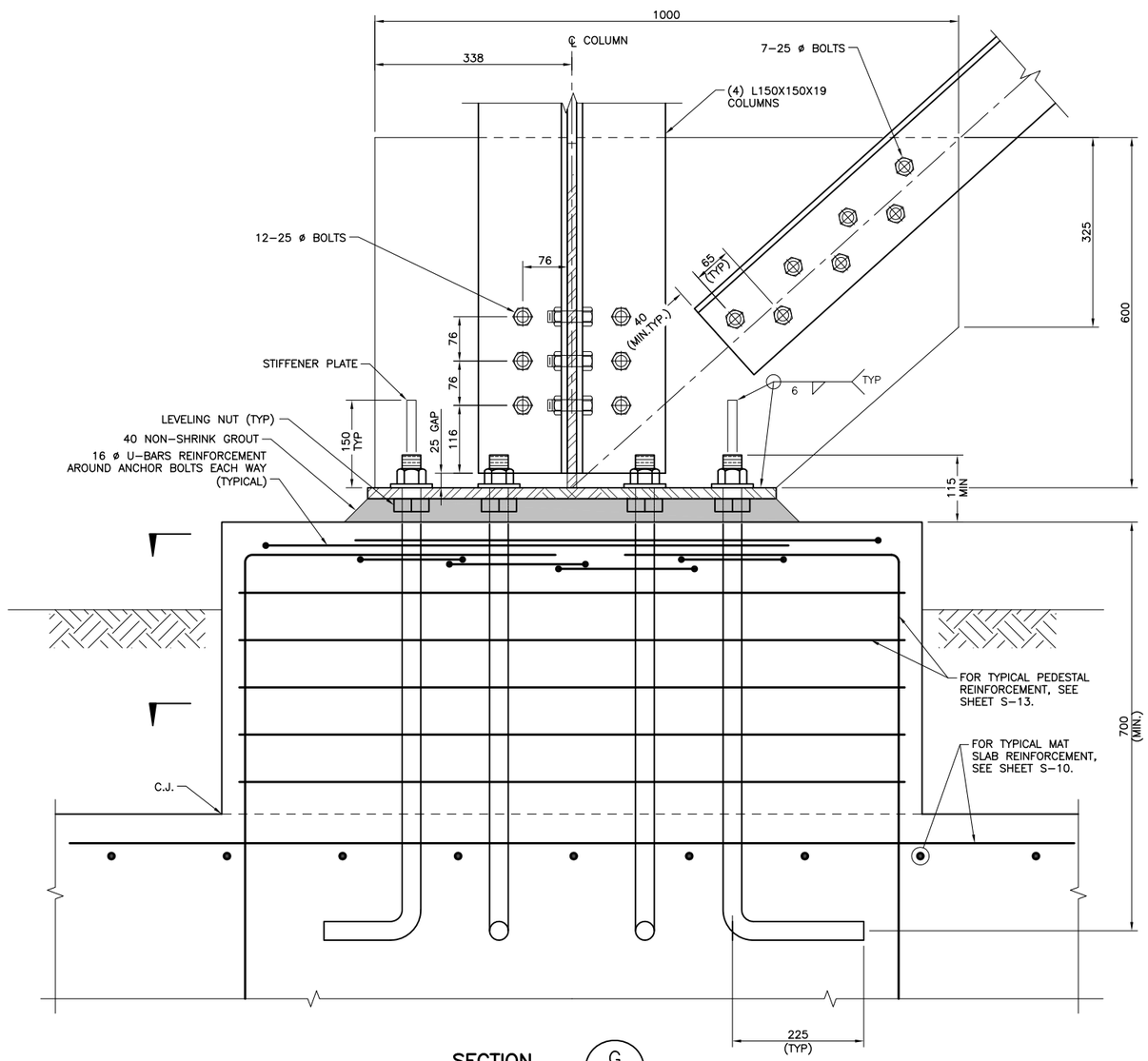

SECTION G
SCALE 1:5 S–10 | S–14

H
S–14 | S–13

S
S–14 | S–13

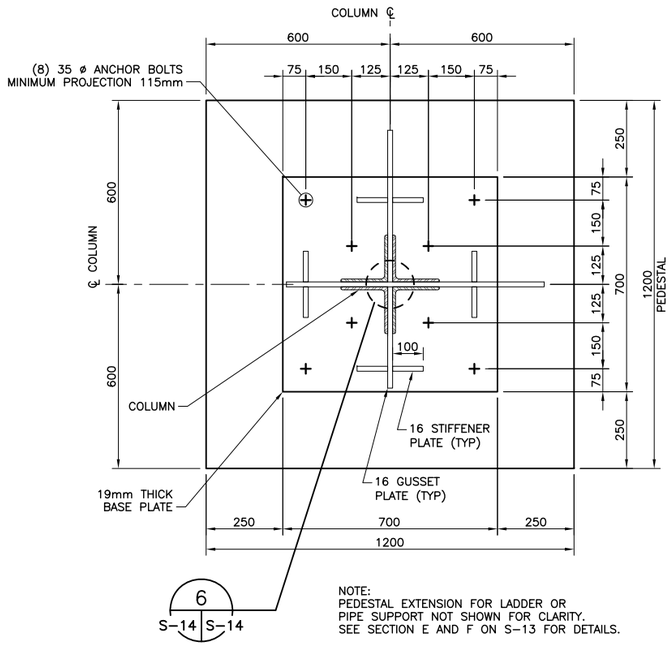

6
S–14 | S–14

NOTE:
PEDESTAL EXTENSION FOR LADDER OR PIPE SUPPORT NOT SHOWN FOR CLARITY. SEE SECTION E AND F ON S–13 FOR DETAILS.

DETAIL 1
SCALE 1:10 S–10 | S–14

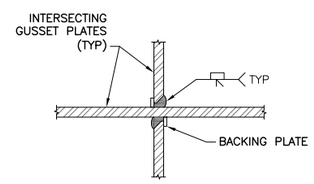

TYPICAL WELD AT INTERSECTING GUSSET PLATES DETAIL 6
SCALE 1:5 S–14, S–15 | S–14

UNLESS OTHERWISE NOTED, LINEAR DIMENSIONS SHOWN ARE IN MILLIMETERS.

0 .50 1.00
1:10
0 .10 .20 .30 .40 .50
1:5
NOTE: A3 SIZE REDUCED TO HALF SCALE.

BID DOCUMENT SUBMITTAL

SYMB	SUBMITTAL/REVISION DESCRIPTION	DATE	APR
B	BID DOCUMENT SUBMITTAL	09/26/10	SGW
A	95% DESIGN SUBMITTAL	08/19/10	SGW

This project was made possible by the United States Agency for International Development and the generous support of the American People through USAID Global Architecture and Engineering IQC Contracts.

DESIGNED BY: RB
DRAWN BY: GPV
CHECKED BY: APL
DATE: 09–26–10
SUBMITTED BY: TETRA TECH
CAD FILE NAME: LT0006–S–14

USAID FROM THE AMERICAN PEOPLE

A E S P

USAID – OIEE
SARDAR GIRLS HIGH SCHOOL
KABUL, AFGHANISTAN
WATER TOWER
FOUNDATION DETAILS
SHEET 2 OF 2

SHEET REFERENCE NUMBER:
LT0006
S–14

Z:\127–1298–10001\Work Orders\WO–LT\WO–LT–0006 SGHS Utility Design\CAD\Conceptual\Structural\DWG\LT0006–S–14.dwg 9/25/2010 3:04:50 PM Koethe, Eric

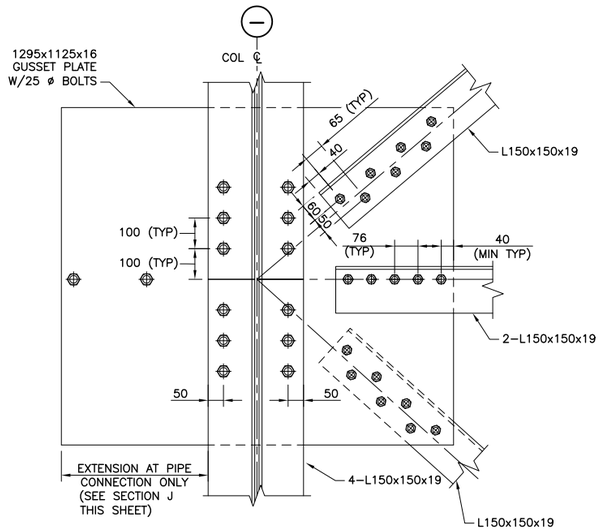

ELEVATION 3
SCALE 1:10
S–12, S–16 S–15

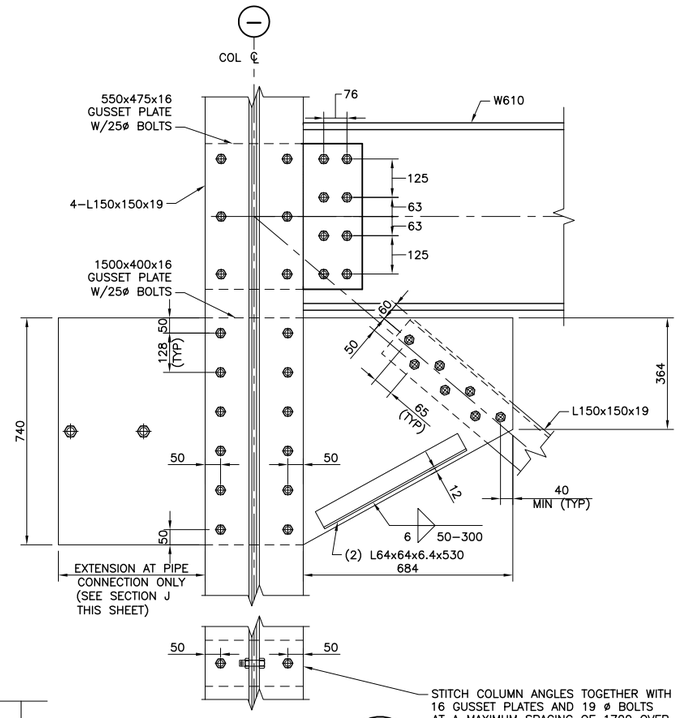

ELEVATION 4
SCALE 1:10
S–12 S–15

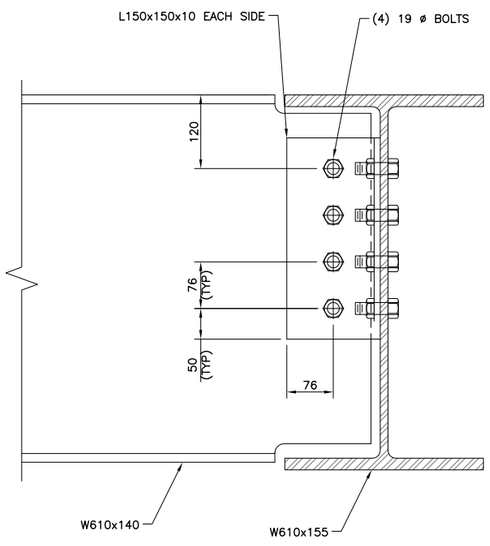

SECTION I
SCALE 1:5
S–11 S–15

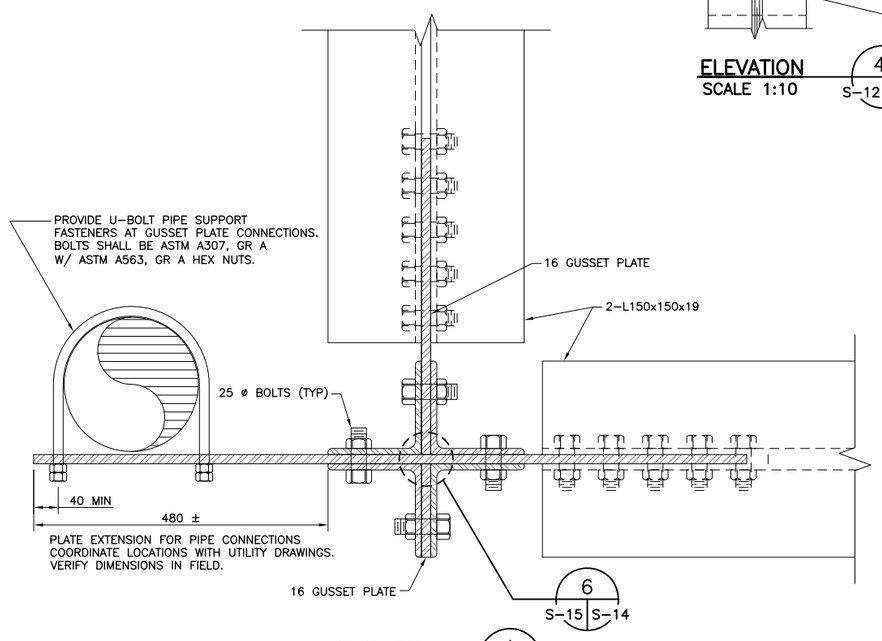

SECTION J
SCALE 1:5
S–12 S–15

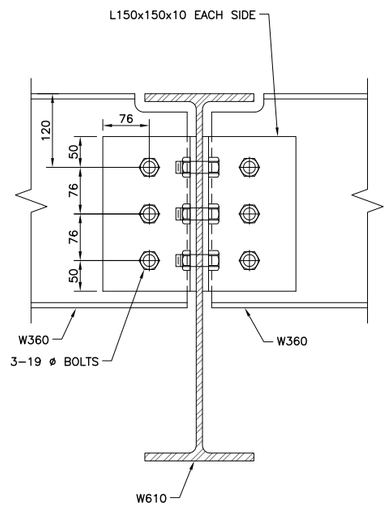

SECTION K
SCALE 1:5
S–11 S–15

UNLESS OTHERWISE NOTED, LINEAR
DIMENSIONS SHOWN ARE IN MILLIMETERS.

0 .10 .20 .30 .40 .50
1:5
0 .50 1.00
1:10
NOTE: A3 SIZE REDUCED TO HALF SCALE.

BID DOCUMENT SUBMITTAL

SYMB	SUBMITTAL/REVISION DESCRIPTION	DATE	APR
B	BID DOCUMENT SUBMITTAL	09/26/10	SGW
A	95% DESIGN SUBMITTAL	08/19/10	SGW

This project was made possible by the United States Agency for International Development and the generous support of the American People through USAID Global Architecture and Engineering IQC Contracts.

DESIGNED BY: RB
DATE: 09–26–10
DRAWN BY: GPV
SUBMITTED BY: TETRA TECH
CHECKED BY: APL
CAD FILE NAME: LT0006–S–15

USAID FROM THE AMERICAN PEOPLE

A E S P

USAID – OIEE
SARDAR GIRLS HIGH SCHOOL
KABUL, AFGHANISTAN
WATER TOWER
SECTIONS AND DETAILS
SHEET 1 OF 3

SHEET REFERENCE NUMBER:
LT0006
S–15

Z:\127–1298–10001\Work Orders\WO–LT\WO–LT–0006 SGHS Utility Design\CAD\Conceptual\Structural\DWG\LT0006–S–15.dwg 9/25/2010 3:07:56 PM Koethe, Eric

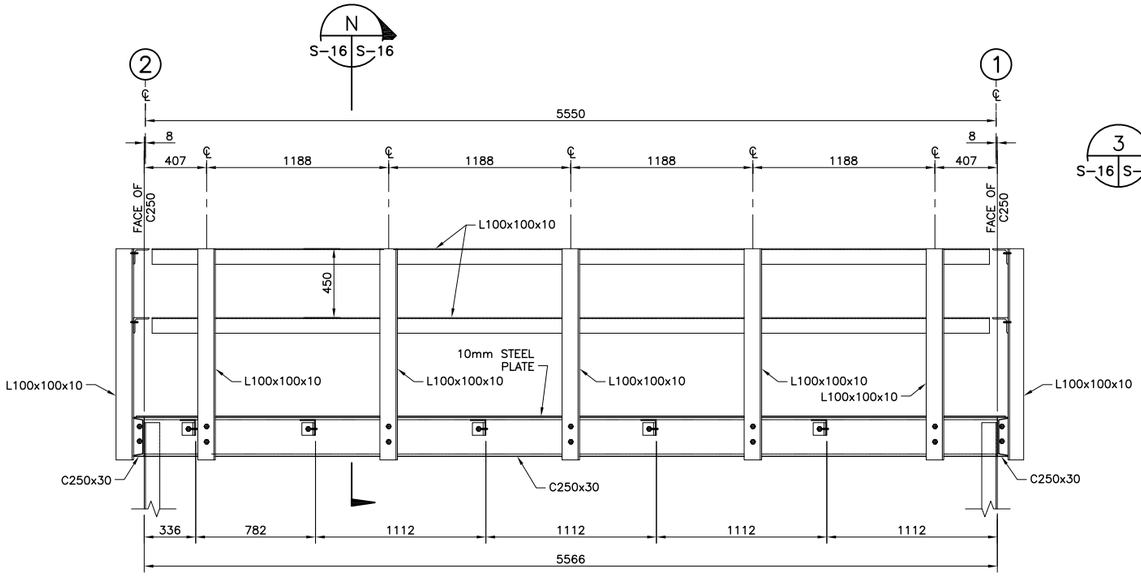

CATWALK ELEVATION
SCALE 1:20
L
S-11 S-16

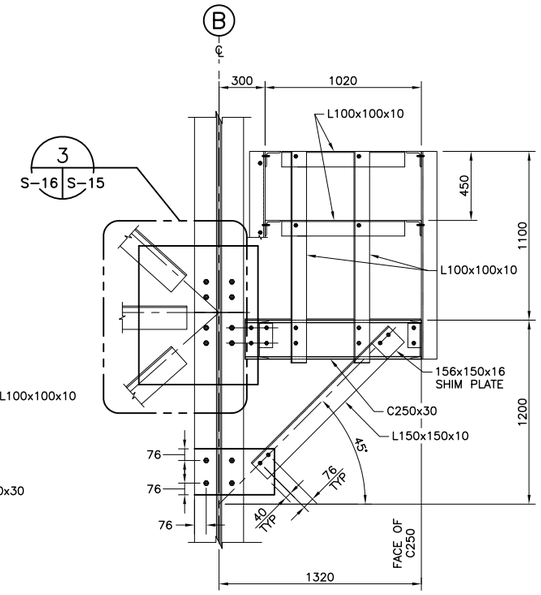

CATWALK ELEVATION
SCALE 1:20
M
S-11 S-16

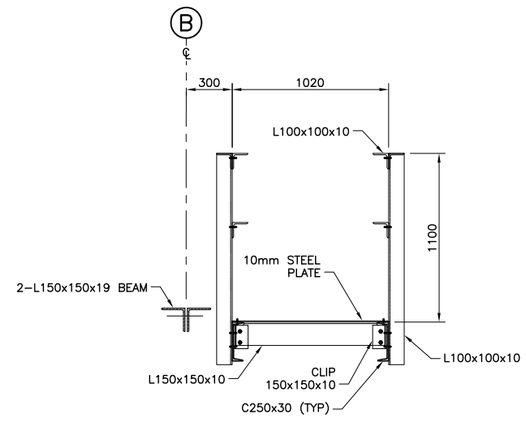

CATWALK SECTION
SCALE 1:20
N
S-16 S-16

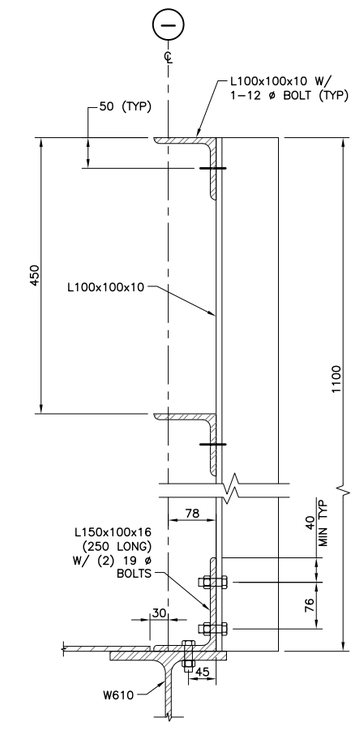

PLATFORM HANDRAIL DETAIL
SCALE 1:5

NOTE: ALL STRUCTURAL STEEL AND BOLTS SHALL BE HOT DIP GALVANIZED, SEE SHEET S-02.

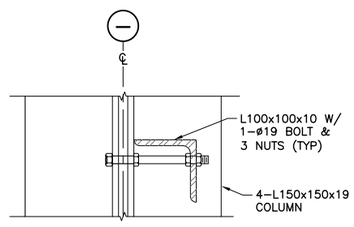

COLUMN/HANDRAIL CONNECTION DETAIL
SCALE 1:5

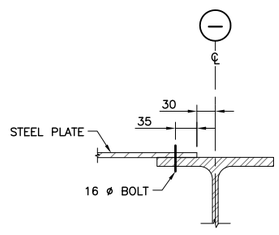

STEEL PLATE ATTACHMENT DETAIL
SCALE 1:5

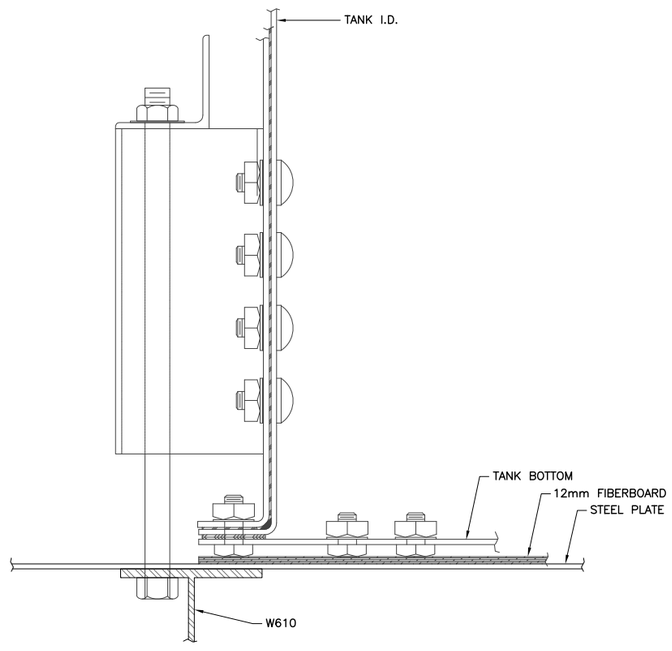

NOTES: THE DETAIL SHOWN IS SCHEMATIC AND WILL VARY BASED ON THE SELECTED TANK MANUFACTURER'S RECOMMENDATION. CONTRACTOR TO COORDINATE WITH ENGINEER WHEN TANK IS SELECTED.

ASSUMED TANK BASE CONNECTION TO STEEL FRAMING
N.T.S.

1 .50 0 1
1:20
0 .10 .20 .30 .40 .50
1:5
NOTE: A3 SIZE REDUCED TO HALF SCALE.

UNLESS OTHERWISE NOTED, LINEAR DIMENSIONS SHOWN ARE IN MILLIMETERS.

BID DOCUMENT SUBMITTAL

SYMB	SUBMITTAL/REVISION DESCRIPTION	DATE	APR
B	BID DOCUMENT SUBMITTAL	09/26/10	SGW
A	95% DESIGN SUBMITTAL	08/19/10	SGW

This project was made possible by the United States Agency for International Development and the generous support of the American People through USAID Global Architecture and Engineering IQC Contracts.

DESIGNED BY: RB
DATE: 09-26-10
DRAWN BY: GPV
SUBMITTED BY: TETRA TECH
CHECKED BY: APL
CAD FILE NAME: LT0006-S-16

USAID FROM THE AMERICAN PEOPLE

A E S P

USAID – OIEE
SARDAR GIRLS HIGH SCHOOL
KABUL, AFGHANISTAN
WATER TOWER
SECTIONS AND DETAILS
SHEET 2 OF 3

SHEET REFERENCE NUMBER:
LT0006
S-16

Z:\127-1298-10001\Work Orders\WO-LT\WO-LT-0006 SGHS Utility Design\CAD\Conceptual\Structural\DWG\LT0006-S-16.dwg 9/25/2010 3:09:13 PM Koethe, Eric

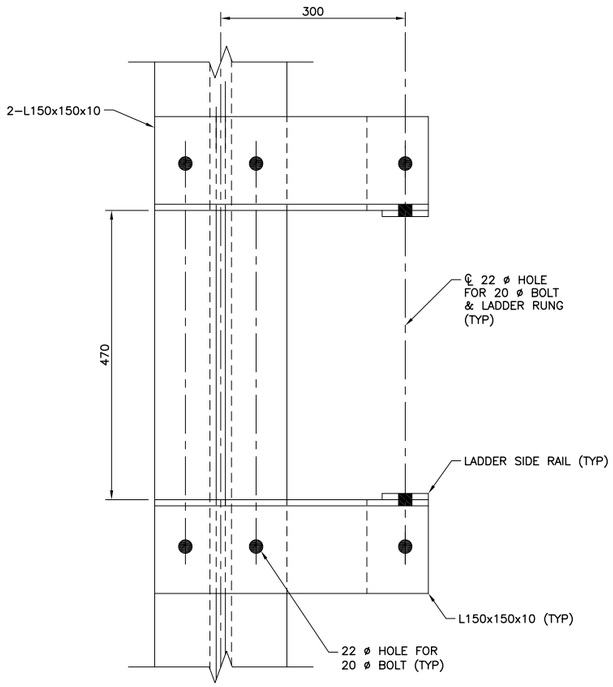

SECTION O
SCALE 1:5
S–12, S–17 | S–17

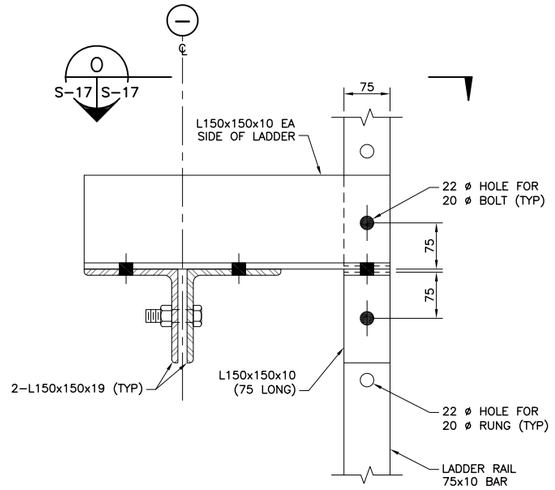

SECTION P
SCALE 1:5
S–12 | S–17

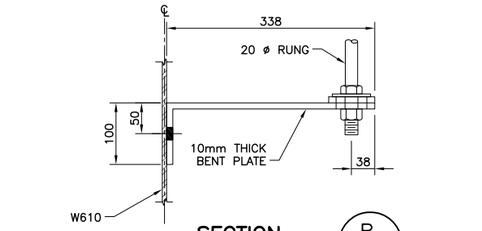

SECTION R
SCALE 1:5
S–17 | S–17

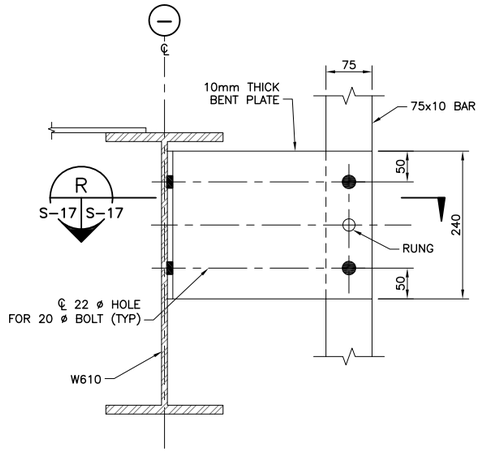

SECTION Q
SCALE 1:5
S–12 | S–17

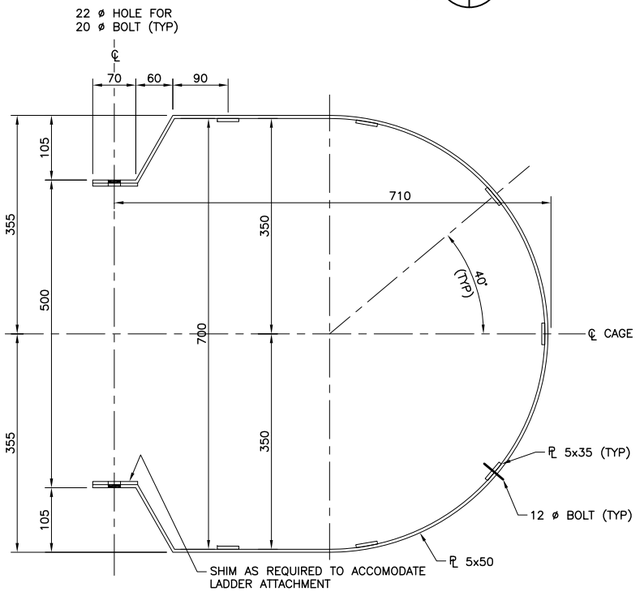

LADDER CAGE DETAIL
SCALE 1:5

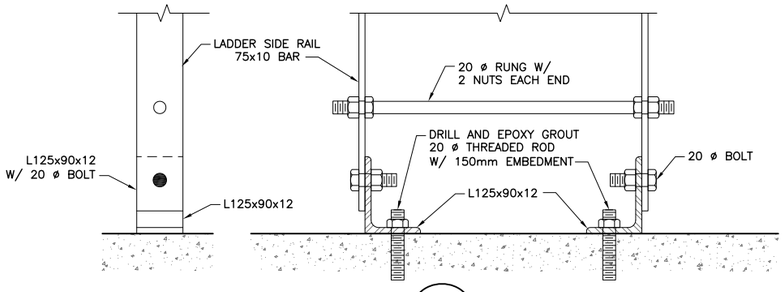

DETAIL 5
SCALE 1:5
S–12 | S–17

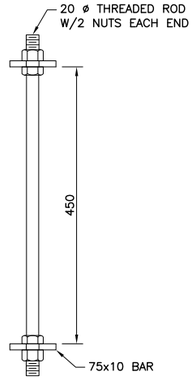

LADDER RUNG & SIDE RAIL
SCALE 1:5

UNLESS OTHERWISE NOTED, LINEAR DIMENSIONS SHOWN ARE IN MILLIMETERS.

0 .10 .20 .30 .40 .50
1:5
NOTE: A3 SIZE REDUCED TO HALF SCALE.

BID DOCUMENT SUBMITTAL

This project was made possible by the United States Agency for International Development and the generous support of the American People through USAID Global Architecture and Engineering IQC Contracts.

SYMB	SUBMITTAL/REVISION DESCRIPTION	DATE	APR
B	BID DOCUMENT SUBMITTAL	09/26/10	SGW
A	95% DESIGN SUBMITTAL	08/19/10	SGW

DESIGNED BY: RB
DATE: 09-26-10
DRAWN BY: GPV
SUBMITTED BY: TETRA TECH
CHECKED BY: APL
CAD FILE NAME: LT0006-S-17

USAID FROM THE AMERICAN PEOPLE

A E S P

USAID – OIEE
SARDAR GIRLS HIGH SCHOOL
KABUL, AFGHANISTAN
WATER TOWER
SECTIONS AND DETAILS
SHEET 3 OF 3

SHEET REFERENCE NUMBER:
LT0006 S–17

Z:\127-1298-10001\Work Orders\WO-LT\WO-LT-0006 SGHS Utility Design\CAD\Conceptual\Structural\DWG\LT0006-S-17.dwg 9/25/2010 3:03:40 PM Koethe, Eric

PLAN LEGEND (MECHANICAL)

- ELECTRIC UNIT HEATER (UH)
- WALL EXHAUST FAN (EF)
- INTAKE LOUVER (L)
- LINE VOLTAGE THERMOSTAT

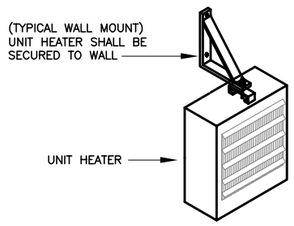

ELECTRIC UNIT HEATER DETAIL 2 (M-01 | M-01)
N.T.S.

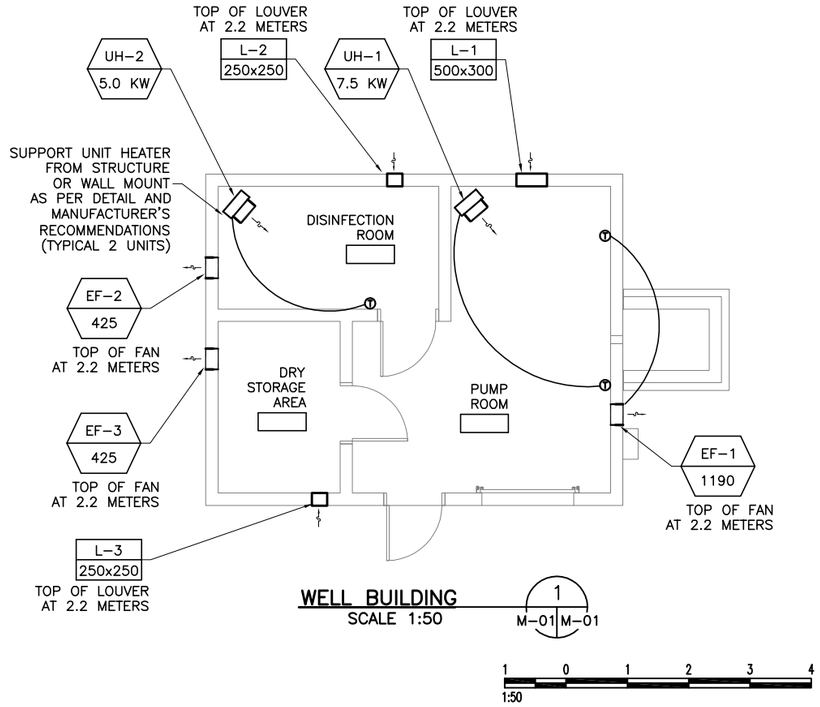

WELL BUILDING 1 (M-01 | M-01)
SCALE 1:50

WALL EXHAUST FAN SCHEDULE - (EF)

DWG LABEL	SERVES	TYPE	M3/HR	FAN DATA					ELECTRICAL				NOTES
				SONES	RPM	SP (MM WG)	OPENING (SQ. MM)	DRIVE TYPE	HP	BHP WATTS	V/PH	HZ	
EF-1	PUMP ROOM	SIDE WALL PROPELLER	1190	5.9	1550	3.8	380	DIRECT	1/12	170	240/1	50	BELOW
EF-2	DISINFECTION ROOM	SIDE WALL PROPELLER	425	4.9	1550	3.8	330	DIRECT	1/25	75	240/1	50	BELOW
EF-3	DRY STORAGE AREA	SIDE WALL PROPELLER	425	4.9	1550	3.8	330	DIRECT	1/25	75	240/1	50	BELOW

NOTES:

1. PROVIDE WALL COLLAR, MOTOR SIDE GUARD, BACKDRAFT DAMPER, AND 45 DEG. WEATHERHOOD FOR FLUSH, EXTERIOR MOUNTING ARRANGEMENT.
2. SEQUENCES OF OPERATION: EF-1 SHALL ENERGIZE WHEN SPACE TEMPERATURE RISES ABOVE SETPOINT. FANS EF-2 AND EF-3 SHALL RUN CONTINUOUSLY AT ALL TIMES.
3. FAN SHALL BE OF FABRICATED ALUMINUM WITH PROPELLER RIVITED TO HUB AND LOCKED TO MOTOR SHAFT. MOTOR SHALL BE PERMANENTLY LUBRICATED AND OF GALVANIZED STEEL OR PAINTED STEEL. DRIVE FRAME ASSEMBLY SHALL BE WELDED WIRE OR FORMED CHANNELS WITH DEEP FORMED INLET VENTURI SHAPE.

LOUVER SCHEDULE - (L)

DWG LABEL	SERVES	TYPE	LENGTH (MM)	HEIGHT (MM)	DEPTH (MM)	FREE AREA (%)	M3/HR	VEL. (MPM)	NOTES
L-1	PUMP ROOM	INTAKE	500	300	150	50	1190	132	BELOW
L-2	DISINFECTION ROOM	INTAKE	250	250	150	50	425	113	BELOW
L-3	DRY STORAGE AREA	INTAKE	250	250	150	50	425	113	BELOW

NOTES:

1. PROVIDE WITH ENAMEL FINISH.
2. PROVIDE WITH ALUMINUM INSECT SCREEN
3. DAMPER SHALL INCLUDE ADJUSTABLE GRAVITY INTAKE DAMPER BLADES.
4. LOUVER SHALL BE EXTRUDED ALUMINUM WITH DRAINABLE BLADES. BLADES AND FRAME SHALL BE A MINIMUM OF 2MM THICK. LOUVERS SHALL BE 150MM DEEP.

UNIT HEATER SCHEDULE - (UH)

DWG LABEL	UNIT LOCATION	TYPE	MANUFACT.	MODEL	MOUNTING HEIGHT (M)	HEATING CAPACITY				ELECTRICAL				NOTES
						M3/HR	EAT (°C)	LAT (°C)	KW	V/PH	HZ	AMPS	HP	
UH-1	PUMP ROOM	HORIZ. DISCH.	CHROMALOX	HVH-05-A-1	2.2	700	10	31	5.0	220/1	50	21.4	1/40	BELOW
UH-2	DISINEFECTION ROOM	HORIZ. DISCH.	CHROMALOX	HVH-02-A-1	2.2	680	10	21	2.6	220/1	50	11.4	1/40	BELOW

NOTES:

1. MOUNTING HEIGHT IS TO BOTTOM OF UNIT.
2. PROVIDE WALL MOUNTED THERMOSTAT, LINE VOLTAGE, SETPOINT=13 DEG.C
3. SEQUENCES OF OPERATION: UNIT HEATERS SHALL RUN WHENEVER SPACE TEMPERATURE FALLS BELOW SETPOINT.
4. PROVIDE INTERNAL SAFETIES AND UNIT DISCONNECT. FUSING SHALL BE FACTORY INSTALLED AND WIRED AS PER NEC REQUIREMENTS.
5. PROVIDE WALL MOUNTED SWIVEL BRACKET FROM UNIT MANUFACTURER; MOUNT ACCORDING TO MANUFACTURER'S WRITTEN INSTALLATION INSTRUCTIONS.

EQUIPMENT SCHEDULES
N.T.S.

UNLESS OTHERWISE NOTED, LINEAR DIMENSIONS SHOWN ARE IN MILLIMETERS.

NOTE: A3 SIZE REDUCED TO HALF SCALE.

BID DOCUMENT SUBMITTAL

This project was made possible by the United States Agency for International Development and the generous support of the American People through USAID Global Architecture and Engineering IQC Contracts.

SYMB	SUBMITTAL/REVISION DESCRIPTION	DATE	APR
B	BID DOCUMENT SUBMITTAL	09/26/10	NRF
A	95% DESIGN SUBMITTAL	08/19/10	NRF

DESIGNED BY: CSR
DATE: 09-26-10
DRAWN BY: CSR
SUBMITTED BY: TETRA TECH
CHECKED BY: NRF
CAD FILE NAME: LT0006-M-01

USAID FROM THE AMERICAN PEOPLE

A E S P

USAID – OIEE
SARDAR GIRLS HIGH SCHOOL
KABUL, AFGHANISTAN
MECHANICAL
FLOOR PLAN

SHEET REFERENCE NUMBER:
LT0006
M-01

Z:\127-1298-10001\Work Orders\WO-LT\WO-LT-0006 SGHS Utility Design\CAD\Conceptual\Mechanical\LT0006-M-01.dwg 9/25/2010 3:58:38 PM Harris, Jessica

POWER PLAN LEGEND

SYMBOL	DESCRIPTION
	PANELBOARD
	16A, 250V SHUKO RECEPTACLE GFI SUBSCRIPT GROUND FAULT INTERRUPTER. LABEL RECEPTACLE WITH VOLTAGE, FREQUENCY AND BRANCH CIRCUIT CONNECTED.
CR	CORD REEL
	EQUIPMENT CONNECTION
R	RELAY
J	JUNCTION BOX
T	TRANSFORMER
	GROUNDING ROD (MADE ELECTRODE)
	SWITCH,16A,250, UNO
TYPE→A SWITCH→a ←CKT	LIGHTING FIXTURE
	EXIT SIGN. WALL MOUNT AS INDICATED. LIT FACES AS INDICATED.
	HOME RUN TO PANELBOARD
	LOAD UNDER OTHER SECTIONS

ON-LINE AND CONTROL SCHEMATIC LEGEND

SYMBOL	DESCRIPTION
##A #P a	CIRCUIT BREAKER (AMP AND POLE QUANTITY AND PHASE)
20A	CIRCUIT BREAKER – AMPERAGE AS INDICATED
20A	FUSE – AMPERAGE AS INDICATED
	TRANSFORMER
LC# a	LIGHTING CONTACTOR – NORMALLY OPEN CONTACT
LC# C	LIGHTING CONTACTOR COIL (CLOSED COIL)
LC# O	LIGHTING CONTACTOR COIL (OPEN COIL)
GEN	GENERATOR
	FUSED DISCONNECT SWITCH
	ATS: AUTO XFR SW MTS MANUAL XFR SW
	GES

ABBREVIATIONS

AFG	ABOVE FINISHED GRADE
AFF	ABOVE FINISHED FLOOR
A	AMPERE
AHU	AIR HANDLING UNIT
kAIC	AMPERE INTERRUPTING CAPACITY IN THOUSANDS
ATS	AUTOMATIC TRANSFER SWITCH
BFG	BELOW FINISHED GRADE
BLDG	BUILDING
CATV	CABLE TELEVISION
CKT	CIRCUIT
C	CONDUIT
CH	CONVECTION HEATER
CND	CONDUCTOR
COR	CONTRACTING OFFICERS REPRESENTATIVE
EF	EXHAUST FAN
EHC	ELECTRIC HEATING COIL
EP	EXPLOSION PROOF
EPO	EMERGENCY POWER OFF
ERH	ELECTRIC RADIENT HEATER
ESS	ELECTRONIC SECURITY SYSTEM
F	FAN
FACP	FIRE ALARM CONTROL PANEL
FO	FIBER OPTIC
GFI	GROUND FAULT INTERRUPTING
GFE	GOVERNMENT FURNISHED CONTRACTOR INSTALLED
HP	HORSEPOWER
HPS	HIGH PRESSURE SODIUM
HZ	HERTZ
IDS	INTRUSION DETECTION SYSTEM
kV	KILOVOLT
kW	KILOWATT
kVA	KILOVOLT-AMPERE
m	METERS
MLO	MAIN LUGS ONLY
MM	MULTIMODE
mm	MILLIMETERS
MH	MANHOLE
MCB	MAIN CIRCUIT BREAKER
MDP	MAIN DISTIBUTION PANEL
MTD	MOUNTED
NEC	NATIONAL ELECTRICAL CODE
PET	PROTECTED ENTRANCE TERMINAL
PH, ϕ	PHASE
P	POLE
RCD	RESIDUAL CURRENT DEVICE
RM	ROOM
SIRP	SECURE INTERNET PROTOCOL ROUTING
SM	SINGLEMODE
SN	SOLID NUETRAL
TBB	TELEPHONE BACKBOARD
TTC	TELEPHONE TERMINAL CABINET
TYP.	TYPICAL
UNO	UNLESS NOTED OTHERWISE
V	VOLT
W	WATT
WM	WIREMOLD
WP	WEATHERPROOF
W/	WITH
W/O	WITHOUT
XFMR,T	TRANSFORMER
N	NEUTRAL
EGC	EQUIPMENT GROUNDING CONDUCTOR
GEC	GROUNDING ELECTRODE CONDUCTOR
GES	GROUNDING ELECTRODE SYSTEM
UGE	UNDERGROUND ELECTRIC
NIC	NOT IN CONTRACT

UNLESS NOTED ELSEWHERE ON THE CONTRACT DOCUMENTS, THE FOLLOWING LIST REPRESENTS THE TYPICAL MOUNTING HEIGHTS FOR THE DEVICES SHOWN:

a. SWITCHES 1,220 mm (TO TOP)
b. RECEPTACLES 500 mm (TO BOTTOM)
c. COMPUTER RECEPTACLES 500 mm (TO BOTTOM)
d. WALL(W) TELE. AND/OR CALL SWITCHES 1,420 mm (TO TOP)
e. TELEPHONE OUTLETS (UNLABELED) 500 mm (TO BOTTOM)
f. TELEVISION OUTLETS 500 mm (TO BOTTOM)
g. FIRE ALARM PULL STATIONS 1,220 mm (TO TOP)
h. FIRE ALARM AUDIO/VISUAL UNITS 2,440 mm (TO TOP)
   * (OR 150 mm BELOW CEILING, WHICHEVER IS LOWER.)
i. POWER PANELS 1,830 mm (TO TOP)
j. DISCONNECT SWITCHES 1,520 mm (TO TOP)
k. MOTOR STARTERS 1,520 mm (TO TOP)
l. EXIT LIGHTS 2,400 mm (TO BOTTOM)

IN MAINTENANCE BAYS, INCLUDING ANY ADJACENT AND COMMUNICATING AREAS, INSTALL ALL EQUIPMENT, ELECTRIC DEVICES, AND WIRING AT A MINIMUM OF 450mm (18 IN.) A.F.F. ANY ELECTRICAL EQUIPMENT OR WIRING INSTALLED BELOW THIS HEIGHT MUST CONFORM TO N.E.C. CLASS 1 DIVISION 2 WIRING METHODS. ANY WIRING BELOW THE FINISHED FLOOR MUST CONFORM TO N.E.C. CLASS 1, DIVISION 1 WIRING METHODS. PROVIDE SEAL-OFFS FOR ANY RACEWAY PENETRATING THE FLOOR IN THESE AREAS.

THE HEIGHTS INDICATED SHALL REQUIRE ONLY ONE BLOCK CUT FOR FLUSH MOUNTED DEVICES. MAINTAIN HEIGHT CONSISTENCY BETWEEN SURFACE AND FLUSH MOUNTED DEVICES.

PROJECT NOTES:

1. CABLE SIZES ARE IN SQUARE MILLIMETERS.
2. CABLE SHALL BE TYPE H07 PER TS9758 WITH 450/700-V,70C RATED PVC INSULATION UNLESS NOTED OTHERWISE.
3. RACEWAYS SHALL BE EMT UNLESS NOTED OTHERWISE.
4. PANELBOARDS SHALL BE ALLOWED TO BE DIN RAIL MOUNTED ASSEMBLIES.

GENERAL NOTES:

1. ALL FEEDER AND BRANCH CIRCUITS SHALL CONTAIN AN EQUIPMENT GROUNDING CONDUCTOR SIZED PER N.E.C.
2. ALL SERVICE ENTRANCE CONDUITS/DUCTS WITH CABLES SHALL BE SEALED AT BOTH ENDS WITH APPROPRIATE SEALER. EMPTY CONDUITS SHALL BE CLEANED AND CAPPED.
3. ALL PANELBOARD DIRECTORIES AND EQUIPMENT I.D'S SHALL BE TYPEWRITTEN AND COMPLETE IN DARI AND ENGLISH.
4. ALL CONDUIT PENETRATIONS THRU FIRE RATED WALLS OR CEILINGS SHALL BE SEALED/FIRESTOPPED.
5. ALL LIGHT SWITCHES SHALL BE RATED 20 AMPERES UNLESS OTHERWISE NOTED.
6. FOR ELECTRICAL INSTALLATION SEISMIC REQUIREMENTS, SEE SPECIFICATION SECTION 26 05 48.00 10, SEISMIC PROTECTION FOR ELECTRICAL EQUIPMENT.
7. PROVIDE FUSES IN FUSED DISCONNECT SWITCHES. SIZE AS REQUIRED BY MANUFACTURER OF EQUIPMENT THAT FUSE IS PROTECTING.

UNLESS OTHERWISE NOTED, LINEAR DIMENSIONS SHOWN ARE IN MILLIMETERS.

NOTE: A3 SIZE REDUCED TO HALF SCALE.

BID DOCUMENT SUBMITTAL

SYMB	SUBMITTAL/REVISION DESCRIPTION	DATE	APR
B	BID DOCUMENT SUBMITTAL	09/26/10	BRG
A	95% DESIGN SUBMITTAL	08/19/10	BRG

This project was made possible by the United States Agency for International Development and the generous support of the American People through USAID Global Architecture and Engineering IQC Contracts.

DESIGNED BY: MAL | DATE: 09-26-10
DRAWN BY: EWK | SUBMITTED BY: TETRA TECH
CHECKED BY: BRG | CAD FILE NAME: LT0006-E-01

USAID FROM THE AMERICAN PEOPLE

A E S P

USAID – OIEE
SARDAR GIRLS HIGH SCHOOL
KABUL, AFGHANISTAN

ELECTRICAL LEGEND, SYMBOLS, GENERAL NOTES & ABBREVIATIONS

SHEET REFERENCE NUMBER:
LT0006 E-01

Z:\127-1298-10001\Work Orders\WO-LT\WO-LT-0006 SGHS Utility Design\CAD\Conceptual\Electrical\DWG\WOLT0006_E-1.dwg 9/25/2010 2:58:08 PM Harris, Jessica

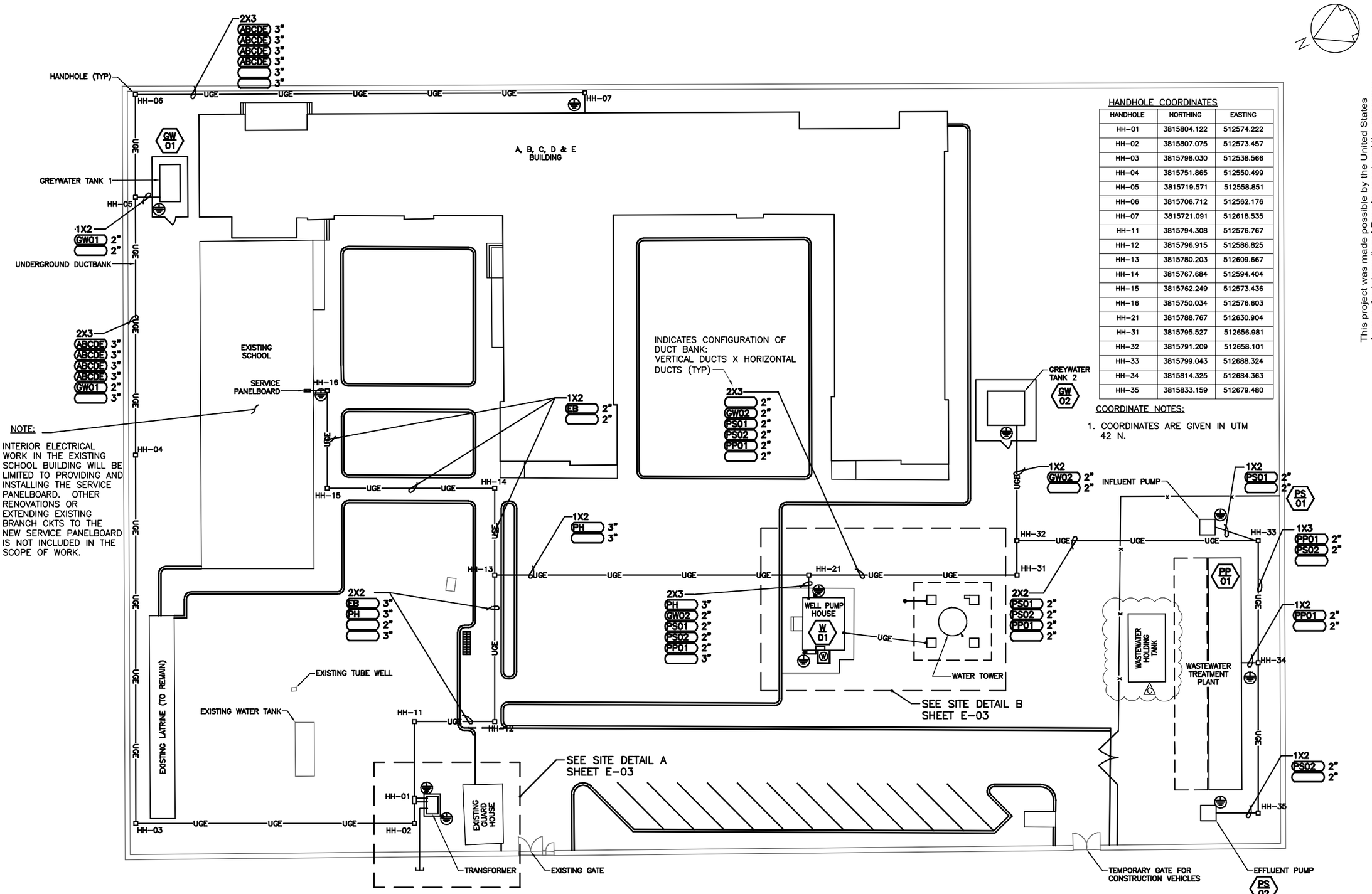

NOTE:

INTERIOR ELECTRICAL WORK IN THE EXISTING SCHOOL BUILDING WILL BE LIMITED TO PROVIDING AND INSTALLING THE SERVICE PANELBOARD. OTHER RENOVATIONS OR EXTENDING EXISTING BRANCH CKTS TO THE NEW SERVICE PANELBOARD IS NOT INCLUDED IN THE SCOPE OF WORK.

HANDHOLE COORDINATES

HANDHOLE	NORTHING	EASTING
HH-01	3815804.122	512574.222
HH-02	3815807.075	512573.457
HH-03	3815798.030	512538.566
HH-04	3815751.865	512550.499
HH-05	3815719.571	512558.851
HH-06	3815706.712	512562.176
HH-07	3815721.091	512618.535
HH-11	3815794.308	512576.767
HH-12	3815796.915	512586.825
HH-13	3815780.203	512609.667
HH-14	3815767.684	512594.404
HH-15	3815762.249	512573.436
HH-16	3815750.034	512576.603
HH-21	3815788.767	512630.904
HH-31	3815795.527	512656.981
HH-32	3815791.209	512658.101
HH-33	3815799.043	512688.324
HH-34	3815814.325	512684.363
HH-35	3815833.159	512679.480

COORDINATE NOTES:

1. COORDINATES ARE GIVEN IN UTM 42 N.

ELECTRICAL SITE PLAN

SCALE 1:250

UNLESS OTHERWISE NOTED, LINEAR DIMENSIONS SHOWN ARE IN METERS.

10 5 0 10 15
1:250
NOTE: A3 SIZE REDUCED TO HALF SCALE.

BID DOCUMENT SUBMITTAL

SYMB	SUBMITTAL/REVISION DESCRIPTION	DATE	APR
C	ADDED WASTEWATER HOLDING TANK	12/09/10	BRG
B	BID DOCUMENT SUBMITTAL	09/26/10	BRG
A	95% DESIGN SUBMITTAL	08/19/10	BRG

This project was made possible by the United States Agency for International Development and the generous support of the American People through USAID Global Architecture and Engineering IQC Contracts.

DESIGNED BY: MAL
DATE: 12-09-10
DRAWN BY: SCJ
SUBMITTED BY: TETRA TECH
CHECKED BY: XXX
CAD FILE NAME: LT0006-E-02

USAID FROM THE AMERICAN PEOPLE

A E S P

USAID – OIEE
SARDAR GIRLS HIGH SCHOOL
KABUL, AFGHANISTAN

ELECTRICAL SITE PLAN

SHEET REFERENCE NUMBER:
LT0006
E-02

P:\1298\Work Orders\WO-LT\WO-LT-0006 SGHS Utility Design\CAD\Conceptual\Electrical\DWG\LT0006_E-2\LT0006-E-02.dwg 12/12/2010 9:33:27 AM Fazelpoor, Behroz

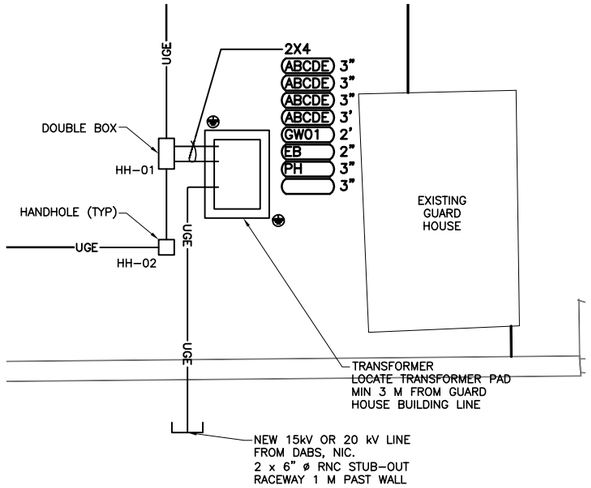

SITE DETAIL A
SCALE 1:100

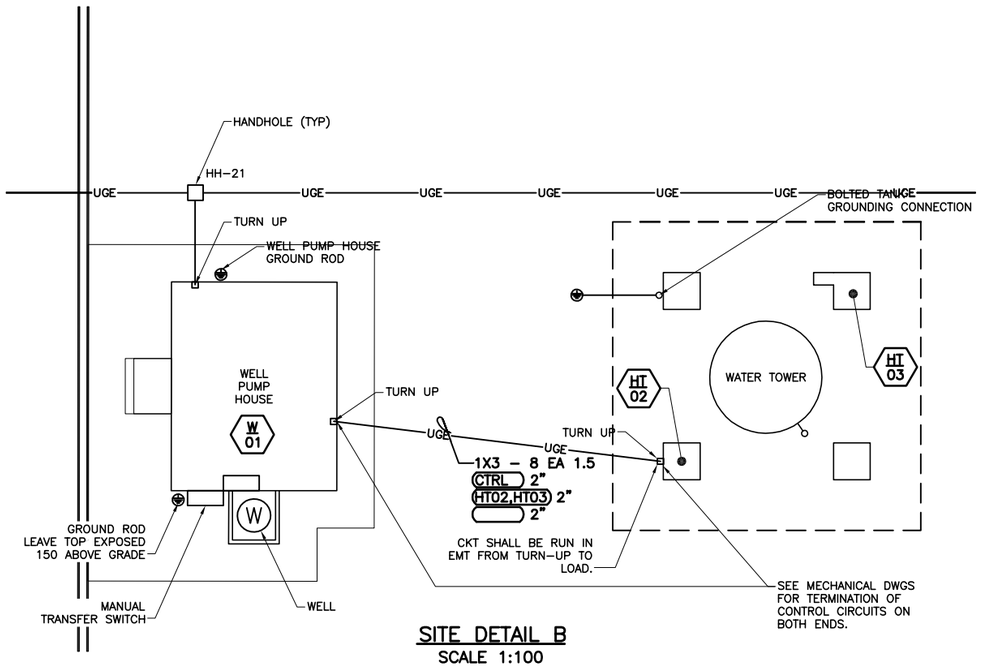

SITE DETAIL B
SCALE 1:100

UNLESS OTHERWISE NOTED, LINEAR DIMENSIONS SHOWN ARE IN METERS.

1 0 1 2 3 4 5 6 7 8 9
1:100
NOTE: A3 SIZE REDUCED TO HALF SCALE.

BID DOCUMENT SUBMITTAL

SYMB	SUBMITTAL/REVISION DESCRIPTION	DATE	APR
B	BID DOCUMENT SUBMITTAL	09/26/10	BRG
A	95% DESIGN SUBMITTAL	08/19/10	BRG

This project was made possible by the United States Agency for International Development and the generous support of the American People through USAID Global Architecture and Engineering IQC Contracts.

DESIGNED BY: MAL
DATE: 09-26-10
DRAWN BY: SCJ
SUBMITTED BY: TETRA TECH
CHECKED BY: XXX
CAD FILE NAME: LT0006-E-03

USAID FROM THE AMERICAN PEOPLE

A E S P

USAID - OIEE
SARDAR GIRLS HIGH SCHOOL
KABUL, AFGHANISTAN

ELECTRICAL SITE DETAIL

SHEET REFERENCE NUMBER:
LT0006 E-03

Z:\127-1298-10001\Work Orders\WO-LT\WO-LT-0006 SGHS Utility Design\CAD\Conceptual\Electrical\DWG\LT0006_E-2\LT0006-E-03.dwg 9/25/2010 3:21:39 PM Harris, Jessica

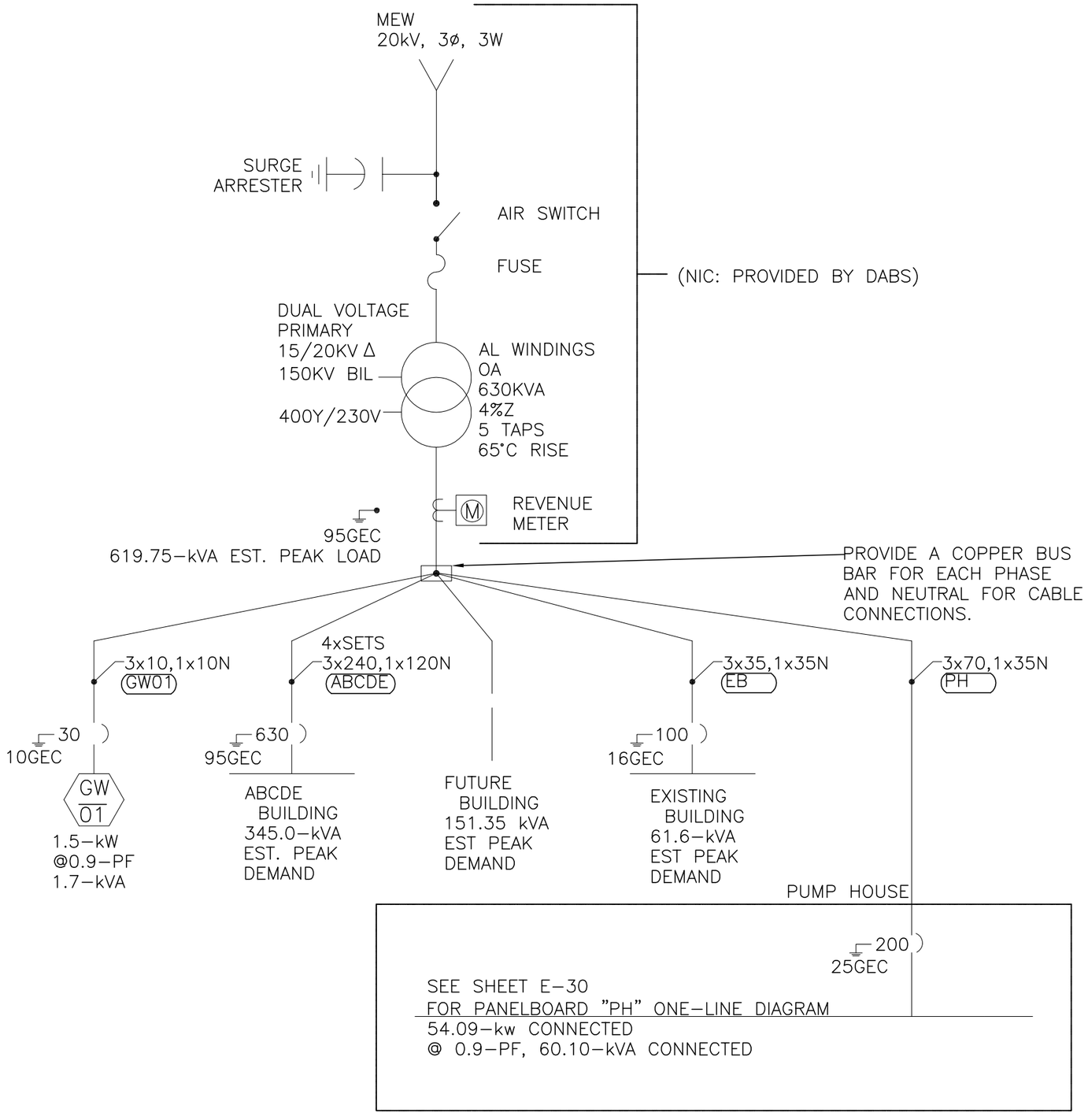

SARDAR KGHS ONE-LINE DIAGRAM
NTS

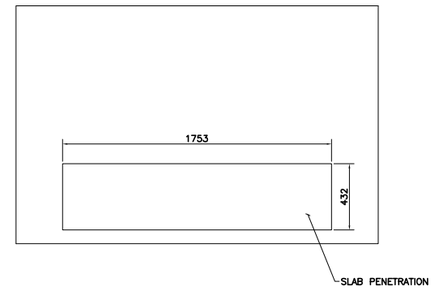

TRANSFORMER SLAB
N.T.S.

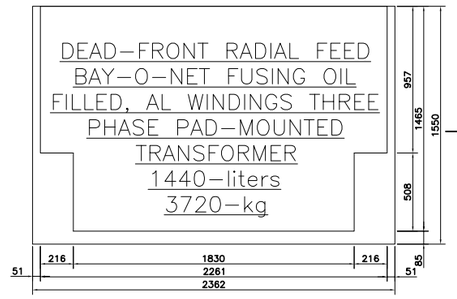

A
E-09 E-09

XFMR/XFMR SLAB
N.T.S.

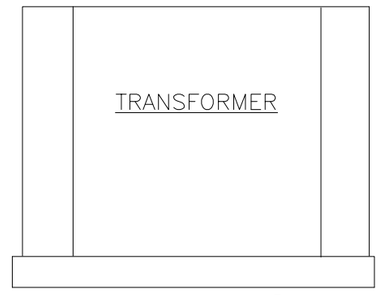

SECTION
N.T.S.
A
E-09 E-09

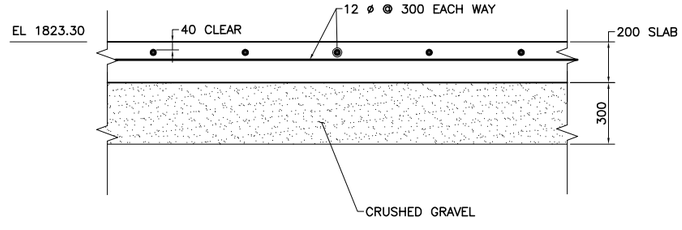

SLAB ON GRADE
TYPICAL REINFORCEMENT DETAIL
N.T.S

UNLESS OTHERWISE NOTED, LINEAR DIMENSIONS SHOWN ARE IN MILLIMETERS.

NOTE: A3 SIZE REDUCED TO HALF SCALE.

This project was made possible by the United States Agency for International Development and the generous support of the American People through USAID Global Architecture and Engineering IQC Contracts.

BID DOCUMENT SUBMITTAL

SYMB	SUBMITTAL/REVISION DESCRIPTION	DATE	APR
B	BID DOCUMENT SUBMITTAL	09/26/10	BRG
A	95% DESIGN SUBMITTAL	08/19/10	BRG

DESIGNED BY: MAL
DATE: 09-26-10
DRAWN BY: EWK
SUBMITTED BY: TETRA TECH
CHECKED BY: BRG
CAD FILE NAME: LT0006-E-10

USAID FROM THE AMERICAN PEOPLE
A E S P

USAID – OIEE
SARDAR GIRLS HIGH SCHOOL
KABUL, AFGHANISTAN
ELECTRICAL ONE-LINE DIAGRAM AND EQUIPMENT DETAILS

SHEET REFERENCE NUMBER:
LT0006
E-10

Z:\127-1298-10001\Work Orders\WO-LT\WO-LT-0006 SGHS Utility Design\CAD\Conceptual\Electrical\DWG\WOLT0006_E-10.dwg 9/25/2010 3:29:01 PM Harris, Jessica

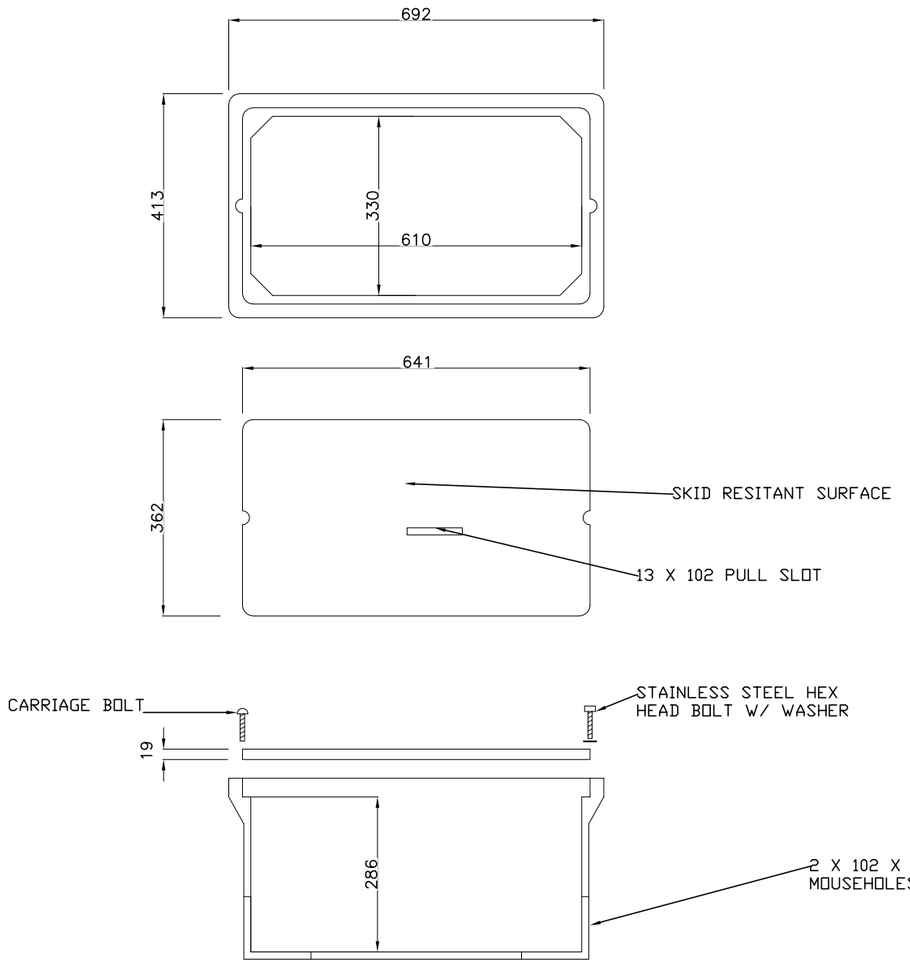

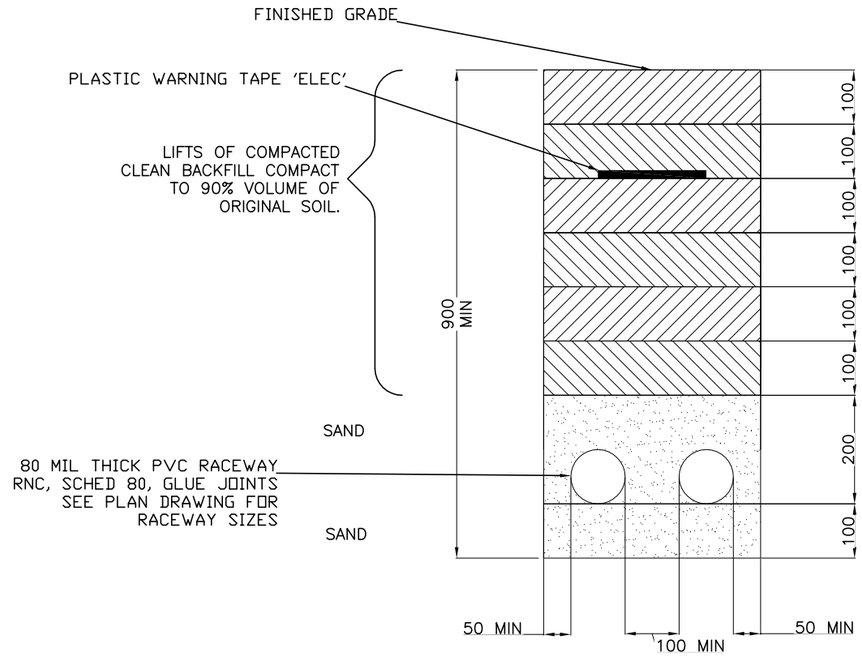

TYPICAL DUCTBANK SECTION
N.T.S.

COVERS

DESCRIPTION	WEIGHT #
W/2 BOLTS	10.4 KG

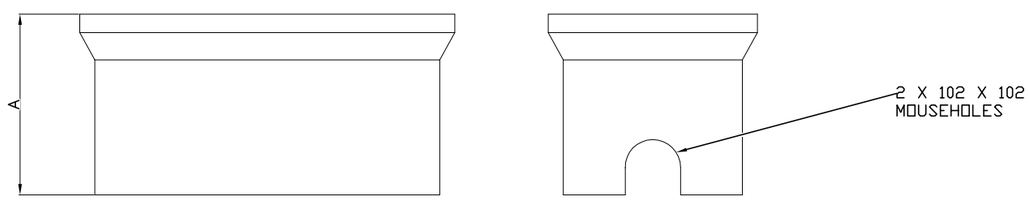

BOXES

DESCRIPTION	WEIGHT #	DIMENSION A
OPEN BOTTOM	22.7 KG	305 MM
OPEN BOTTOM W/2 MOUSE HOLES	22.7 KG	305 MM
SOLID BOTTOM	27.2 KG	318 MM

QUAZITE OR EQUAL STYLE STACKABLE BOX
N.T.S.

UNLESS OTHERWISE NOTED, LINEAR DIMENSIONS SHOWN ARE IN MILLIMETERS.

NOTE: A3 SIZE REDUCED TO HALF SCALE.

BID DOCUMENT SUBMITTAL

SYMB	SUBMITTAL/REVISION DESCRIPTION	DATE	APR
B	BID DOCUMENT SUBMITTAL	09/26/10	BRG
A	95% DESIGN SUBMITTAL	08/19/10	BRG

This project was made possible by the United States Agency for International Development and the generous support of the American People through USAID Global Architecture and Engineering IQC Contracts.

DESIGNED BY: MAL
DATE: 09-26-10
DRAWN BY: EWK
SUBMITTED BY: TETRA TECH
CHECKED BY: BRG
CAD FILE NAME: LT0006-E-20

USAID FROM THE AMERICAN PEOPLE

A E S P

USAID – OIEE
SARDAR GIRLS HIGH SCHOOL
KABUL, AFGHANISTAN

ELECTRICAL DETAILS
AND UNDERGROUND STRUCTURES

SHEET REFERENCE NUMBER:
LT0006
E-20

Z:\127-1298-10001\Work Orders\WO-LT\WO-LT-0006 SGHS Utility Design\CAD\Conceptual\Electrical\DWG\WOLT0006_E-20.dwg 9/25/2010 3:31:20 PM Harris, Jessica

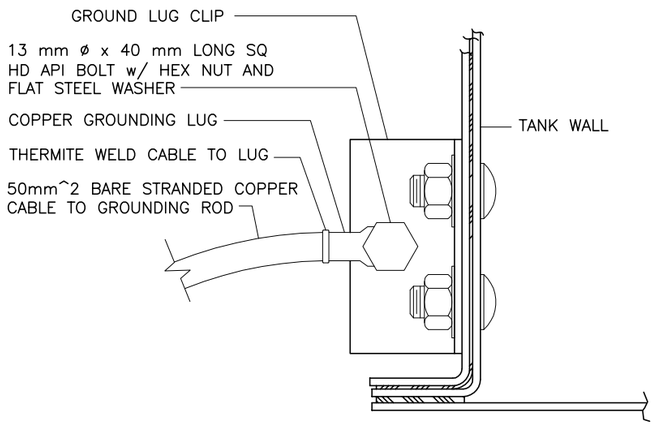

BOLTED TANK GROUNDING CONNECTION DETAIL
N.T.S.

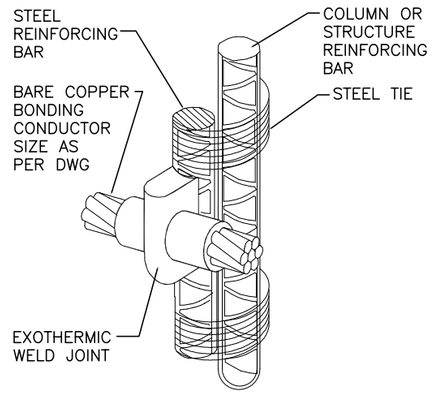

WELDING TO STEEL REINFORCING BAR STEEL
N.T.S.

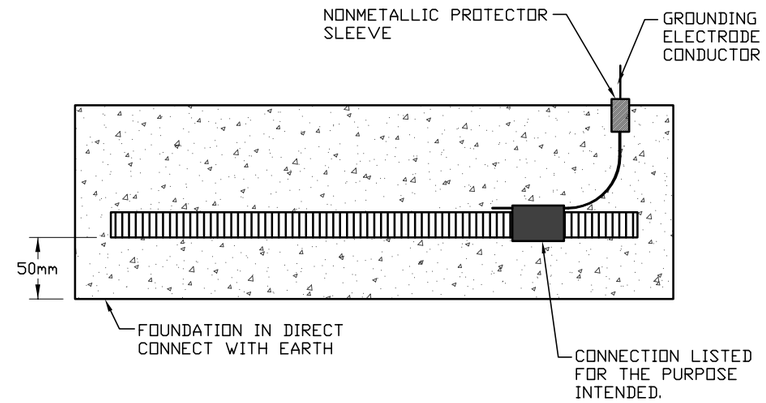

CONNECTION SHALL BE AS NEAR TO THE SERVICE PANEL AS PRACTICAL.

CONCRETE–ENCASED (UFER) ELECTRODE
N.T.S.

NOTES:

1. BOLTED TANK GROUNDING DETAIL IS PROVIDED FOR REFERENCE ONLY. CONTRACTOR TO PROVIDE GROUNDING CONNECTION PER TANK MANUFACTURER'S REQUIREMENTS.

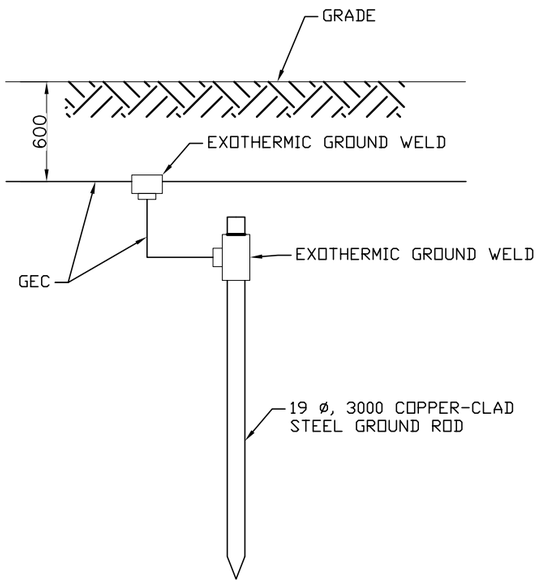

MADE ELECTRODE
N.T.S.

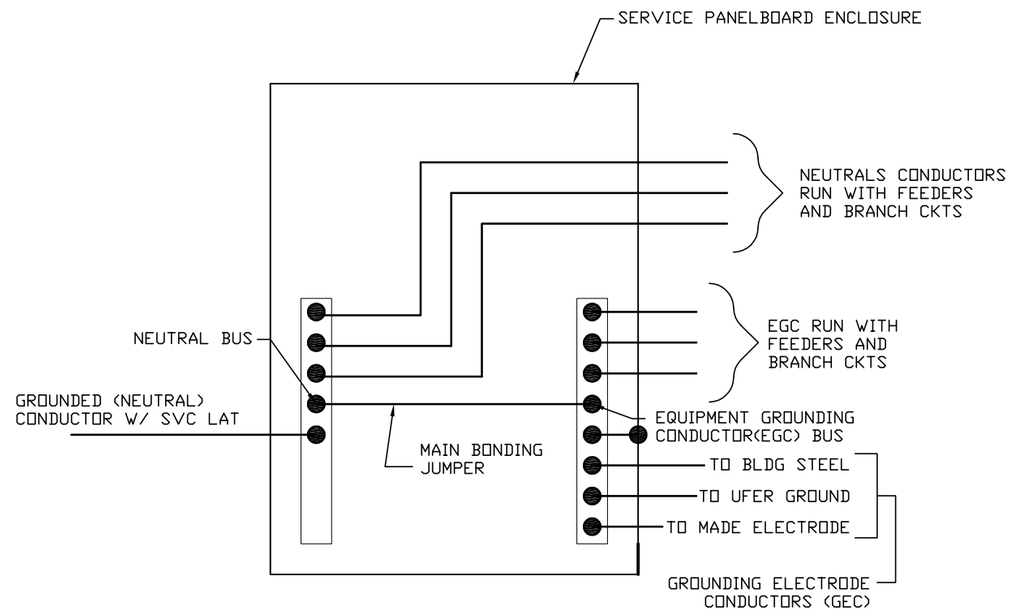

SERVICE ENTRANCE GROUNDING DETAIL
N.T.S.

NOTES:

1. GROUNDING ELECTRODE CONDUCTORS (GEC) AND MAIN BONDING JUMPER (MBJ) SIZED PER NEC TABLE 250.66.

UNLESS OTHERWISE NOTED, LINEAR DIMENSIONS SHOWN ARE IN MILLIMETERS.

NOTE: A3 SIZE REDUCED TO HALF SCALE.

BID DOCUMENT SUBMITTAL

SYMB	SUBMITTAL/REVISION DESCRIPTION	DATE	APR
B	BID DOCUMENT SUBMITTAL	09/26/10	BRG
A	95% DESIGN SUBMITTAL	08/19/10	BRG

This project was made possible by the United States Agency for International Development and the generous support of the American People through USAID Global Architecture and Engineering IQC Contracts.

DESIGNED BY: MAL | DATE: 09-26-10
DRAWN BY: EWK | SUBMITTED BY: TETRA TECH
CHECKED BY: BRG | CAD FILE NAME: LT0006-E-21

USAID FROM THE AMERICAN PEOPLE

A E S P

USAID – OIEE
SARDAR GIRLS HIGH SCHOOL
KABUL, AFGHANISTAN

ELECTRICAL DETAILS

SHEET REFERENCE NUMBER:
LT0006 E–21

Z:\127-1298-10001\Work Orders\WO-LT\WO-LT-0006 SGHS Utility Design\CAD\Conceptual\Electrical\DWG\WOLT0006_E-21.dwg 9/25/2010 3:33:33 PM Harris, Jessica

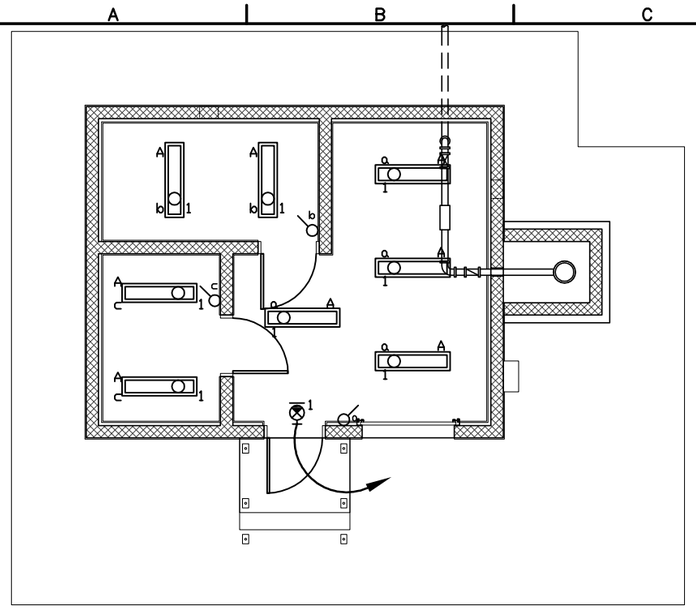

PUMP HOUSE LIGHTING PLAN
1:50

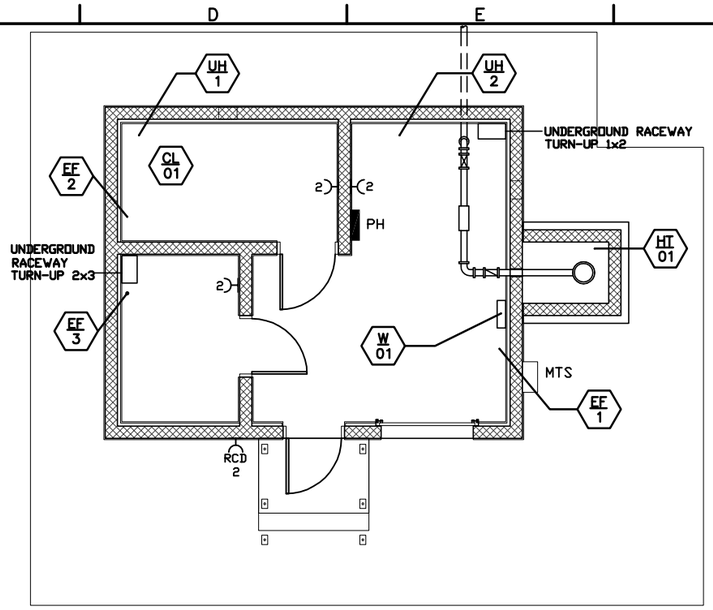

PUMP HOUSE POWER PLAN
1:50

LIGHT FIXTURE SCHEDULE

TYPE	SYMBOL	ITEM	LAMPS	MANUFACTURERS (OR EQUAL) *	
				NAME	MODEL OR SERIES
A		LINEAR, FLUORESCENT WATERPROOF SURFACE MTD FIBERGLASS BODY, ACRYLIC DIFFUSER 680x100x120.	2x18W	PELSAN	5021–104
–		LED EXIT SIGN WHITE ON GREEN SINGLE FACE. ALUMINUM BODY, ACRYLIC DIFFUSER 90 MINUTE NiCd BATTERY 382x26x150.	LED	PELSAN	5513–103

LIGHT FIXTURE SCHEDULE
N.T.S.

LOAD CONNECTION SCHEDULE

NAME	HP	kW	VOLTAGE	PHASES	DISCONNECT	CONTROL
GW–01		1.5	380	3	BY MECH	BY MECH
GW–02		1.5	380	3	BY MECH	BY MECH
PS–01		3.0	380	3	BY MECH	BY MECH
PS–02		6.0	380	3	BY MECH	BY MECH
PP–01		18.0	380	3	BY MECH	BY MECH
HT–01		0.2	220	1	NONE	SELF REGULATING
HT–02		0.2	220	1	NONE	SELF REGULATING
HT–03		0.2	220	1	NONE	SELF REGULATING
CL–01	1.5	–	380	3	BY MECH	BY MECH
EF–1		0.17	220	1	BY MECH	BY MECH
EF–2		0.075	220	1	BY MECH	BY MECH
EF–3		0.075	220	1	BY MECH	BY MECH
UH–1		7.5	220	1	BY MECH	BY MECH
UH–2		5.0	220	1	BY MECH	BY MECH
W–01		10.0	380	3	BY MECH	BY MECH

LOAD CONNECTION SCHEDULE
N.T.S.

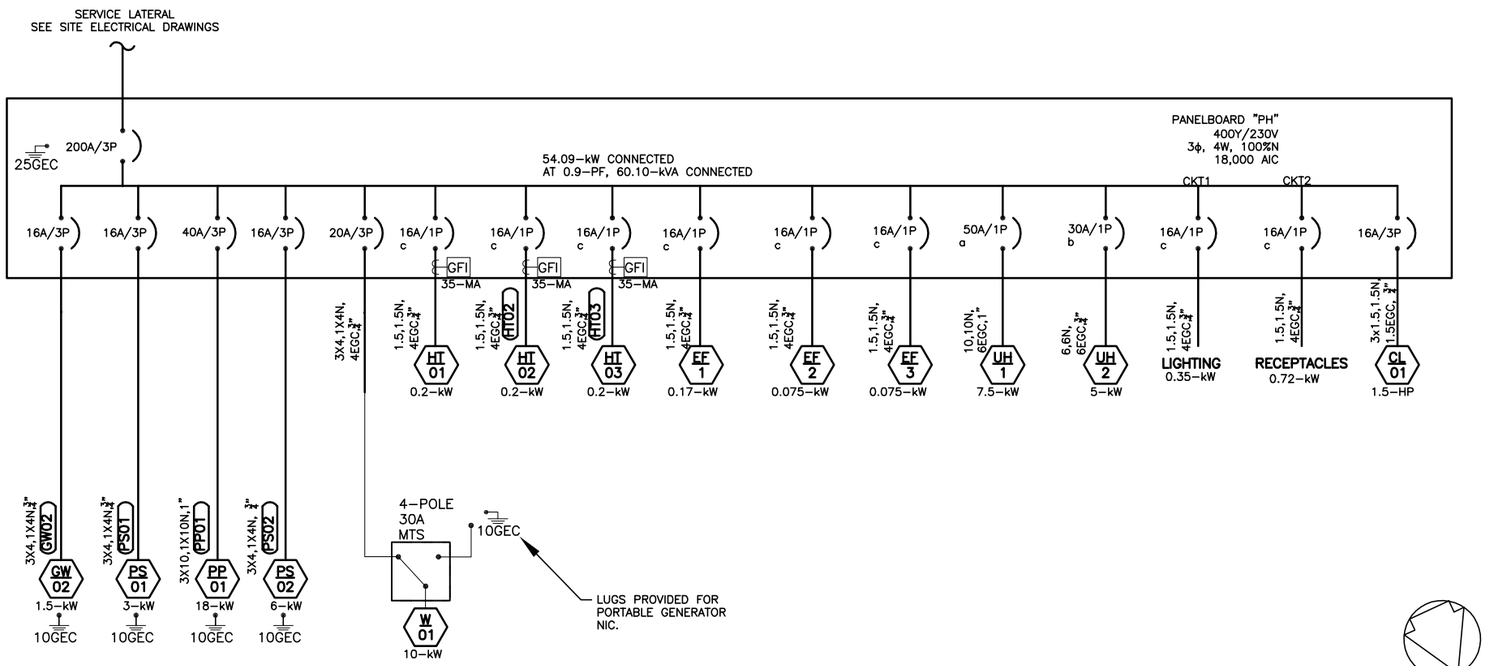

PANELBOARD "PH" ONE–LINE DIAGRAM
N.T.S.

N

1 0 1 2 3 4
1:50

UNLESS OTHERWISE NOTED, LINEAR DIMENSIONS SHOWN ARE IN MILLIMETERS.

NOTE: A3 SIZE REDUCED TO HALF SCALE.

BID DOCUMENT SUBMITTAL

This project was made possible by the United States Agency for International Development and the generous support of the American People through USAID Global Architecture and Engineering IQC Contracts.

SYMB	SUBMITTAL/REVISION DESCRIPTION	DATE	APR
B	BID DOCUMENT SUBMITTAL	09/26/10	BRG
A	95% DESIGN SUBMITTAL	08/19/10	BRG

DESIGNED BY: MAL
DATE: 09–26–10
DRAWN BY: EWK
SUBMITTED BY: TETRA TECH
CHECKED BY: BRG
CAD FILE NAME: LT0006–E–30

USAID FROM THE AMERICAN PEOPLE

A E S P

USAID – OIEE
SARDAR GIRLS HIGH SCHOOL
KABUL, AFGHANISTAN

PUMP HOUSE PLANS & DETAILS

SHEET REFERENCE NUMBER:
LT0006
E–30

Z:\127–1298–10001\Work Orders\WO–LT\WO–LT–0006 SGHS Utility Design\CAD\Conceptual\Electrical\DWG\WOLT0006_E–30.dwg 9/25/2010 3:35:55 PM Harris, Jessica