USAID - OIEE

THREE TOWERS – PROTO TYPE DESIGN AFGHANISTAN

WO-LT-0013

Design Analysis

Volume 1 of 1

Submitted to:

USAID Office of Infrastructure,
Engineering and Energy (OIEE-AESP)

Café Compound

U.S. Embassy

Great Masoon Road Kabul, Afghanistan

Prepared by:

Tetra Tech

One Grant Street

Framingham, MA 01701

Final Design Submittal

August 15, 2010

Design Analysis

The Basis of Design is organized by content and technical design discipline as follows:

Volume 1

Section 1 - Structural Tower Design
Section 2 - Foundation Design
Section 3 - Electrical Design

*****

Structural Tower Design

☐ Not Reviewed (NR)
☑ No Comments (NC)
☐ Furnish as Corrected (FC)
☐ Correction Required (CR)
☐ Rejected (RJ)

This review is for general conformance with the design concept of the project only and does not relieve the Contractor from compliance with the Contract Documents, National, State, or Local Codes and Standards.

By: JPS Date: 7-27-10
POWER Engineers, Inc.

JOE STIPPEL - POWER ENGINEERS, INC.
7-27-10

Structural Tower Design

All comments have been incorporated based on Attached DOCUMENTS.

Design Analysis

Discipline:	Structural	**Date:**	August 15, 2010

Design Submittal: Prototype Design Submittal
Site Location: Kandahar, Price FOB, & Eagle FOB, Afghanistan
Prepared By: Tetra Tech

I. General Summary:

The objective is to prepare a tower design for use in multiple locations. The tower will be 80 meters tall. Loading will include multiple antennas of varying sizes and configurations located at a variety of elevations on the tower. Foundations will be mat foundations on native compacted granular material, as required, at a depth to allow enough cover to assist in providing stability and resistance to overturning.

II. Detailed Analysis:

The allowable bearing pressure will be assumed 95.6 KPa (2,000 lb/ft^2) and a subgrade modulus of 27.145 MPa/m (100 lb/in^2/in) with foundations designed not to exceed allowable soil bearing pressure. Allowable bearing pressure is assumed to be based on 25 mm (1 inch) total settlement.

The tower will be designed to resist all applied loads. As described in TIA-222-G the tower design will consider dead load, wind, ice and seismic forces combined as per TIA-222-G.

Per contract requirements, tower members are all designed to provide 50% reserved capacity when loaded per the requirements of this project's scope. There are two types of loads contributing to development of member stresses in the tower. The first is the tower, itself, with its own force contributions from dead load, wind, ice, and earthquake. The second includes all appurtenances and attachments to the tower, with additional contribution of forces and tower stresses from dead load, wind, ice, and earthquake.

Load distribution through tower members will not be proportional as additional appurtenances and attachments are put in place. Therefore, one member, or set of members, will become over stressed before all others. Since there a numerous potential configurations and locations which could load the tower, it is not possible to predict which members will fail first, or at what additional load these members will fail.

With the above in mind, it is not possible to determine at what point the tower capacity will be exceeded, the foundation capacity will be exceeded, or which will control. Therefore, the stresses calculated are only applicable to the loading presented in this design, and no additional guarantees can be made. Any additional loading must require a full analysis of the tower to assure the tower, any individual member, or the foundation is not over loaded.

III. Basis of Design

- Load combinations are based on TIA-222-G, Section 2.3.
- Strength Limit State, tower members and foundation design strength exceeds factored load effects per TIA-222-G, Section 2.3.2.
- Based on TIA-222-G, Table 2-10 Seismic Analysis Procedure Methods, Seismic loading based on TIA-222-G, Section 2.7.8 Equivalent Modal Analysis Procedure (Method 2).
- Basic Wind Speed considered is 145 km/hr (90 mph), Exposure Category C, Topographic Category 1, Crest Height 0.00 m.
- Nominal Ice Thickness is considered to be 50.8 mm (2 inches), increasing with height, with Ice Density of 56 pcf.
- Live Loads are not applicable.
- Seismic spectral response based on Ss=1.25g and S1=0.60g, Site Class D, Importance Factor I=1.00. Combination of orthogonal seismic loads is not required for non-building structures per ASCE 7-05, Section 12.5, and is not required by TIA-222-G. Therefore, Transverse and longitudinal Earthquake loading are considered separately and independently.
- TIA-222-G Equations 1 & 2 use 1.6 Wo and Equations 4 & 5 use 1.0 E. As shown in the attached calculations, 1.0 E is less than 1.0 Wo, therefore, Earthquake will not control and need not be further considered.
- Allowable bearing capacity is assumed and based on 25mm (1 inch) settlement.
- IBC Basic Load Combinations, as defined in Section 1605.3.1, are determined using the maximum of W or 0.7E.
- Concrete and reinforcement design is be based on Load Factor Design. Based on ACI 318, load combinations in Section 9.2, load combinations compare 1.6W and 1.0E. As noted above, using TIA-222-G methods for determining earthquake loads, W controls, therefore earthquake need not be further considered in concrete design.
- Proposed equipment loading based on equipment and mounting heights as provided by Power Engineers, dated June 21, 2010 (attached).
- Class III Structure as per TIA-222-G, Section A.2.2.

IV. Material Properties

Concrete Properties:

- Concrete mix shall be ASTM C-150 Type 1 or Type 2 Portland Cement.
- f'c = 280 kg/cm^2
- Reinforcement: fy = 4218 kg/cm^2

Steel Properties:

- Tower Legs ASTM A500, Grade 50
- Structural Plate and Rolled Shapes ASTM A36, Grade 36
- All connections are detailed in accordance with AISC
- All connections are bolted or field welded conforming to AWS D1.1-2002.

Soil properties:

- Weight of Soil 1922 kg/m^3
- Assumed Allowable Soil Bearing Pressure 95.6 KPa based on assumed 25mm Settlement.
- Compaction shall be 95% maximum dry density as per ASTM D 1557.
- Subgrade Modulus 27.145 MPa/m (100 lb/in^2/in).

Code References

- ANSI/TIA-222-G-2, Structural Standard for Antenna Supporting
- International Building Code, 2006
- American Concrete Institute, ACI 318-08, Building Code Requirements for Structural Concrete
- ASCE 7-05, Minimum Design Loads for Buildings and Other Structures
- Unified Facility Criteria – Structural Load Data, UFC 3-310-01

VI. List of Attachments:

Calculations

Calculations

NOTES ON STRUCTURAL ANALYSIS

The following are applicable to the analysis of this tower:

- Antennas located by Power Engineers at Elevation 260 ft were moved to the top of tower, Elevation 263 ft.

- Gusset Plate bearing stresses calculated in RISA Tower were based on 1.2 Fp, therefore, edge distance to sheared edges, based on $1.5d_{bolt}$, have been increased from 15/16” (23.8 mm) for the 5/8” bolt to 1 ½” (38 mm) and rounded up to 40 mm.

- Leg welds to leg connection plates are full penetration groove welds, which have the full base metal capacity. Since the legs are all less than 50% stressed according th the RISA Tower analysis, the welds are less than 50% stressed, and meet the design criteria.

CALCULATIONS INDEX

TOWER TAKE OFF AND LOADING 1-2
SEISMIC CALCULATIONS 3-6
TOWER ANALYSIS..... 7-58
WELD CALCULATIONS 59-61
LOADING BACKUP INFORMATION 62-89
PROPOSED EQUIPMENT LOADING AND MOUNTING HEIGHTS 63-66
TELEVISION ANTENNA..... 67-69
FM RADIO ANTENNA..... 70-71
CELLULAR COMMUNICATIONS ANTENNA 72-76
MICROWAVE DISH ANTENNA..... 77-79
COMMUNCIATIONS CABLE 80-82
MICROWAVE DISH CABLE..... 83-85
MICROWAVE DISH ICE SHIELD 86-89

TOWER TAKE OFF AND LOADING

Section	T1	T2	T3	T4	T5	T6	T7	T8	T9	T10	T11	T12	T13
Legs	P4x.237	P4.5x.438	P6x.562	P8x.5	P10x.593		P10x.718	P12x.687	P12x.75		P12x.843		P12x1
Leg Grade							A500-50						
Diagonals		L3x3x3/16	L3 1/2x3 1/2x1/4		2L2 1/2x2 1/2x3/16		2L3x3x3/16	2L3x3x1/4			2L3 1/2x3 1/2x5/16		
Diagonal Grade							A36						
Top Girts	L1 1/2x1 1/2x1/4												
Horizontals					N.A.		N.A.				2L3 1/2x3 1/2x5/16		
Red. Horizontals										L3 1/2x3 1/2x3/16	L3 1/2x3 1/2x1/4	L3 1/2x3 1/2x5/16	
Red. Diagonals										L3 1/2x3 1/2x1/4	L3 1/2x3 1/2x5/16	L3 1/2x3 1/2x3/8	
Red. Hips											L1 1/2x1 1/2x1/8		
Inner Bracing											L1 1/2x1 1/2x1/8		
Face Width (ft) 26	5		6.75	8.5	10.25	12	13.75	15.5	17.25	19	20.75	22.5	24.25
# Panels @ (ft)	5 @ 4.58333	4 @ 4.97917		12 @ 5		6 @ 6.66667		4 @ 10				4 @ 20	
Weight (lb) 88632.8	1535.1	1829.1	3447.5	4171.4	5661.5	5467.0	6772.4	7579.1	8214.8	9489.3	10405.2	11819.3	12241.4

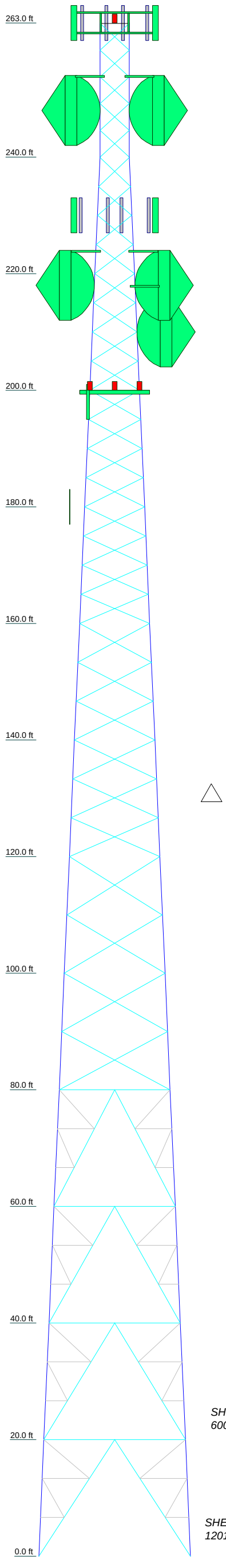

DESIGNED APPURTENANCE LOADING

TYPE	ELEVATION	TYPE	ELEVATION
PiROD 15' Platform w/handrails (Monopole)	263	DBXNY-6565B-VTM	230
DBXNY-6565B-VTM	263	DBXNY-6565B-VTM	230
DBXNY-6565B-VTM	263	DBXNY-6565B-VTM	230
DBXNY-6565B-VTM	263	Andrew MD-S12 Ice Shield	224
DBXNY-6565B-VTM	263	Andrew MD-S12 Ice Shield	224
DBXNY-6565B-VTM	263	Andrew MD-S12 Ice Shield	218
DBXNY-6565B-VTM	263	DAX12-59AD	218
Flash Beacon Lighting	263	DAX12-59AD	218
Andrew MD-S12 Ice Shield	254	DAX12-59AD	210
Andrew MD-S12 Ice Shield	254	Flash Beacon Lighting	200
DAX12-59AD	248	PiROD 12' Low Profile Circular Platform	200
DAX12-59AD	248	Flash Beacon Lighting	200
DBXNY-6565B-VTM	230	Flash Beacon Lighting	200
DBXNY-6565B-VTM	230	JAMPRO JDH-LV2	198
DBXNY-6565B-VTM	230	JAMPRO JCPB-1H	180

MATERIAL STRENGTH

GRADE	Fy	Fu	GRADE	Fy	Fu
A500-50	50 ksi	62 ksi	A36	36 ksi	58 ksi

TOWER DESIGN NOTES

1. Tower designed for Exposure C to the TIA-222-G Standard.
2. Tower designed for a 90 mph basic wind in accordance with the TIA-222-G Standard.
3. Tower is also designed for a 40 mph basic wind with 2.00 in ice. Ice is considered to increase in thickness with height.
4. Deflections are based upon a 60 mph wind.
5. Tower Structure Class III.
6. Topographic Category 1 with Crest Height of 0.00 ft
7. Weld together tower sections have flange connections.
8. Connections use galvanized A325 bolts, nuts and locking devices. Installation per TIA/EIA-222 and AISC Specifications.
9. Tower members are "hot dipped" galvanized in accordance with ASTM A123 and ASTM A153 Standards.
10. Welds are fabricated with ER-70S-6 electrodes.
11. TOWER RATING: 49.9%

ALL REACTIONS ARE FACTORED

MAX. CORNER REACTIONS AT BASE:
DOWN: 838475 lb
UPLIFT: -672128 lb
SHEAR: 72730 lb

AXIAL 913383 lb
SHEAR 60048 lb
MOMENT 9247286 lb-ft
TORQUE 4352 lb-ft
40 mph WIND - 2.0000 in ICE

AXIAL 133357 lb
SHEAR 120185 lb
MOMENT 17878787 lb-ft
TORQUE 28800 lb-ft
REACTIONS - 90 mph WIND

Tetra Tech
One Grant Street
Framingham, MA, USA 01701
Phone: (508)903-2000
FAX: (508)903-2001

Job: **PROTOTYPE TOWER DESIGN**			
Project: ***Three Towers Project***			
Client: USAID	Drawn by: FPH	App'd:	
Code: TIA-222-G	Date: 07/12/10	Scale: NTS	
Path: P:\1298\127-1298-10001-LT0013\SupportDocs\Calcs\RISA Runs\Modifiied to 0.50.ed		Dwg No. E-1	

SEISMIC CALCULATIONS

Self Supporting Tower Simplified Seismic Load Determination

General Information

Project:	Three Towers Project	Designed By: FPH	Date: 07/26/10
Task:	Simplified Seismic Analysis	Checked By:	Date:
Subject:	Calculate Equivilant Static Loads		
References:	TIA-222-G "Structural Standard for Antenna Supporting Structures and Antennas		
Note:	2.7.8 Equivalent Modal Analysis Procedure (Method 2)		

Tower Height (h) = 260.0 ft

Short Period Spectral Response (S_S) = 1.25

Max. 1 Sec. Spectral Response (S_1) = 0.60

Site Class = D

Acceleration Based Site Coefficient (Fa) = 1.0 (TIA-222-G, Table 2-12)

Velocity Based Site Coefficient (Fv) = 1.5 (TIA-222-G, Table 2-13)

Design Short Spectral Response (S_{DS}) = 2/3 Fa S_S (TIA-222-G, 2.7.6)

= 0.83

Design 1 Sec. Spectral Response (S_{D1}) = 2/3 Fv S_1 (TIA-222-G, 2.7.6)

= 0.60

Self Supporting Latice Structure Fundamental Frequency: (TIA-222-G, 2.7.11.1)

Face Width Top of Structure (wt) = 5.00 ft

Average Face Width of Structure (wo) = 26.00 ft

Average Face Width of Structure (wa) = 15.50 ft

Weight of Structure & Appurtenances (W) = 96.47 kips

Factored Weight (W1) = $W [(wa / wo)^2 + 0.15]$ (TIA-222-G, 2.7.11.1)

= 48.8 kips

5% of Tower Height = 13.00 ft (TIA-222-G, 2.7.11.1)

☐ Not Reviewed (NR)
☒ No Comments (NC)
☐ Furnish as Corrected (FC)
☐ Correction Required (CR)
☐ Rejected (RJ)

This review is for general conformance with the design concept of the project only and does not relieve the Contractor from compliance with the Contract Documents, National, State, or Local Codes and Standards.

By: DPS Date: 7.27.10

POWER Engineers, Inc.

Self Supporting Tower Simplified Seismic Load Determination

General Information

Project:	Three Towers Project	Designed By: FPH	Date: 07/26/10
Task:	Simplified Seismic Analysis	Checked By:	Date:
Subject:	Calculate Equivilant Static Loads		
References:	TIA-222-G "Structural Standard for Antenna Supporting Structures and Antennas		
Note:	2.7.8 Equivalent Modal Analysis Procedure (Method 2)		

Weight of top 5% w/ Appurtenances (W2) = 6.1 kips

Frequency Coefficient (Ks) = 4540 (for analysis in feet) (TIA-222-G, 2.7.11.1)

Fundamental Frequency (f1) = Ks wa [sqrt(W1 / (W1 + W2))] / h2 (TIA-222-G, 2.7.11.1)
= 0.98 sec

Seismic Shear:

R = 3.0 (TIA-222-G, 2.7.7.1)

Structure Class = III (TIA-222-G, Table 2-1)

Importance Factor (I) = 1.50 (TIA-222-G, Table 2-3)

$a = 1.89 (z / h)^2$ (TIA-222-G, Figure 2-13)

$b = 26.4 (z/h)^5 - 44.5 (z/h)^4 + 27.0 (z/h)^3 - 8.14 (z/h)^2 + 1.22 (z/h)$ (TIA-222-G, Figure 2-13)

$c = 4.48 (z/h)^5 - 7.16 (z/h)^4 + 6.41 (z/h)^3 - 3.23 (z/h)^2 + 0.64 (z/h)$ (TIA-222-G, Figure 2-13)

$S_{DS} / S_{D1} = 1.38$ (TIA-222-G, 2.7.8.1)

$S_A = 0.59$ (TIA-222-G, 2.7.8.1)

$S_{az} = [a (S_A)^2 + b (S_{DS})^2] / [(S_A)^2 + c (S_{DS})^2]^{1/2}$ (TIA-222-G, 2.7.8.1)

$F_{sz} = S_{az} w_z I / R$

☐ Not Reviewed (NR)
☒ No Comments (NC)
☐ Furnish as Corrected (FC)
☐ Correction Required (CR)
☐ Rejected (RJ)

This review is for general conformance with the design concept of the project only and does not relieve the Contractor from compliance with the Contract Documents, National, State, or Local Codes and Standards.

By: JBS Date: 7-27-10
POWER Engineers, Inc.

Seismic Lateral Loads:

Self Supporting Tower Simplified Seismic Load Determination

General Information

Project: Three Towers Project
Task: Simplified Seismic Analysis
Subject: Calculate Equivilant Static Loads

Designed By: FPH Date: 07/26/10
Checked By: Date:

References: TIA-222-G "Structural Standard for Antenna Supporting Structures and Antennas
Note: 2.7.8 Equivalent Modal Analysis Procedure (Method 2)

Section Span	Section Height (ft)	Level (i)	Sect. Wt. (kips)	Sect. Acc. Wt. (kips)	w_z (kips)	h_z (ft)	a	b	c	S_{az}	F_{sz} (kips)	Wind Load (kips)	Controling Load
240 - 260	20	13	1.54	4.58	6.12	250	0.0051	0.0449	0.0254	0.0541	0.33	4.96	Wind
220 - 240	20	12	1.83	0.54	2.37	230	0.0051	0.0450	0.0255	0.0542	0.13	4.30	Wind
200 -220	20	11	2.67	2.10	4.77	210	0.0052	0.0451	0.0255	0.0544	0.26	4.67	Wind
180 - 200	20	10	4.18	2.74	6.92	190	0.0052	0.0453	0.0256	0.0546	0.38	4.60	Wind
160 - 180	20	9	4.86	0.40	5.26	170	0.0053	0.0454	0.0257	0.0548	0.29	4.83	Wind
140 - 160	20	8	5.47	0.25	5.72	150	0.0054	0.0457	0.0259	0.0552	0.32	4.64	Wind
120 - 140	20	7	6.77	0.25	7.02	130	0.0055	0.0459	0.0260	0.0554	0.39	4.86	Wind
100 - 120	20	6	7.58	0.25	7.83	110	0.0056	0.0463	0.0263	0.0559	0.44	4.61	Wind
80 - 100	20	5	7.76	0.25	8.01	90	0.0058	0.0469	0.0266	0.0567	0.45	4.53	Wind
60 - 80	20	4	9.04	0.25	9.29	70	0.0062	0.0477	0.0271	0.0578	0.54	5.19	Wind
40 - 60	20	3	9.74	0.25	9.99	50	0.0068	0.0492	0.0281	0.0598	0.60	4.96	Wind
20 - 40	20	2	10.58	0.25	10.83	30	0.0084	0.0523	0.0301	0.0641	0.69	4.57	Wind
0 - 20	20	1	12.10	0.25	12.35	10	0.0189	0.0634	0.0374	0.0822	1.02	4.06	Wind
		Σ =	84.12	12.35									

Since TIA-222-G Equations 1 & 2 use 1.6 Wind, Equations 4 & 5 use 1.0 Earthquake, and 1.0 Wind controls, then Earthquake need not be considered.

☐ Not Reviewed (NR)
☒ No Comments (NC)
☐ Furnish as Corrected (FC)
☐ Correction Required (CR)
☐ Rejected (RJ)

This review is for general conformance with the design concept of the project only and does not relieve the Contractor from compliance with the Contract Documents, National, State, or Local Codes and Standards.

By: FPB Date: 7-27-10
POWER Engineers, Inc.

TOWER ANALYSIS

NOTES ON STRUCTURAL ANALYSIS

The following are applicable to the analysis of this tower:

- Antennas located by Power Engineers at Elevation 260 ft were moved to the top of tower, Elevation 263 ft.

- Gusset Plate bearing stresses calculated in RISA Tower were based on 1.2 Fp, therefore, edge distance to sheared edges, based on $1.5d_{bolt}$, have been increased from 15/16" (23.8 mm) for the 5/8" bolt to 1 ½" (38 mm) and rounded up to 40 mm.

- Leg welds to leg connection plates are full penetration groove welds, which have the full base metal capacity. Since the legs are all less than 50% stressed according th the RISA Tower analysis, the welds are less than 50% stressed, and meet the design criteria.

Tower Input Data

The main tower is a 3x free standing tower with an overall height of 263.00 ft above the ground line.
The base of the tower is set at an elevation of 0.00 ft above the ground line.
The face width of the tower is 5.00 ft at the top and 26.00 ft at the base.
This tower is designed using the TIA-222-G standard.
The following design criteria apply:

Basic wind speed of 90 mph.
Structure Class III.
Exposure Category C.
Topographic Category 1.
Crest Height 0.00 ft.
Nominal ice thickness of 2.0000 in.
Ice thickness is considered to increase with height.
Ice density of 56 pcf.
A wind speed of 40 mph is used in combination with ice.
Temperature drop of 50 °F.
Deflections calculated using a wind speed of 60 mph.
Weld together tower sections have flange connections..
Connections use galvanized A325 bolts, nuts and locking devices. Installation per TIA/EIA-222 and AISC Specifications..
Tower members are "hot dipped" galvanized in accordance with ASTM A123 and ASTM A153 Standards..
Welds are fabricated with ER-70S-6 electrodes..
A non-linear (P-delta) analysis was used.
Pressures are calculated at each section.
Stress ratio used in tower member design is 1.
Local bending stresses due to climbing loads, feedline supports, and appurtenance mounts are not considered.

Options

	Consider Moments - Legs		Distribute Leg Loads As Uniform		Treat Feedline Bundles As Cylinder
	Consider Moments - Horizontals		Assume Legs Pinned		Use ASCE 10 X-Brace Ly Rules
	Consider Moments - Diagonals	√	Assume Rigid Index Plate	√	Calculate Redundant Bracing Forces
	Use Moment Magnification	√	Use Clear Spans For Wind Area		Ignore Redundant Members in FEA
√	Use Code Stress Ratios	√	Use Clear Spans For KL/r		SR Leg Bolts Resist Compression
√	Use Code Safety Factors - Guys		Retension Guys To Initial Tension	√	All Leg Panels Have Same Allowable
	Escalate Ice		Bypass Mast Stability Checks		Offset Girt At Foundation
	Always Use Max Kz	√	Use Azimuth Dish Coefficients		Consider Feedline Torque
	Use Special Wind Profile	√	Project Wind Area of Appurt.		Include Angle Block Shear Check
	Include Bolts In Member Capacity		Autocalc Torque Arm Areas		Poles
√	Leg Bolts Are At Top Of Section		SR Members Have Cut Ends		Include Shear-Torsion Interaction
√	Secondary Horizontal Braces Leg		Sort Capacity Reports By Component		Always Use Sub-Critical Flow
	Use Diamond Inner Bracing (4 Sided)		Triangulate Diamond Inner Bracing		Use Top Mounted Sockets
	Add IBC .6D+W Combination				

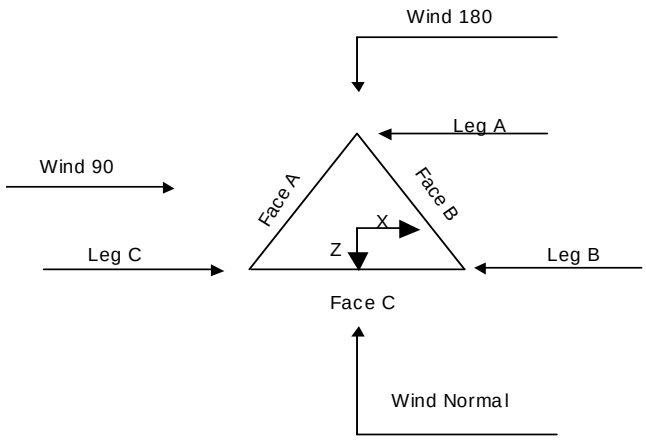

Triangular Tower

Tower Section Geometry

Tower Section	Tower Elevation ft	Assembly Database	Description	Section Width ft	Number of Sections	Section Length ft
T1	263.00-240.00			5.00	1	23.00
T2	240.00-220.00			5.00	1	20.00
T3	220.00-200.00			6.75	1	20.00
T4	200.00-180.00			8.50	1	20.00
T5	180.00-160.00			10.25	1	20.00
T6	160.00-140.00			12.00	1	20.00
T7	140.00-120.00			13.75	1	20.00
T8	120.00-100.00			15.50	1	20.00
T9	100.00-80.00			17.25	1	20.00
T10	80.00-60.00			19.00	1	20.00
T11	60.00-40.00			20.75	1	20.00
T12	40.00-20.00			22.50	1	20.00
T13	20.00-0.00			24.25	1	20.00

Tower Section Geometry *(cont'd)*

Tower Section	Tower Elevation ft	Diagonal Spacing ft	Bracing Type	Has K Brace End Panels	Has Horizontals	Top Girt Offset in	Bottom Girt Offset in
T1	263.00-240.00	4.58	X Brace	No	No	1.0000	0.0000
T2	240.00-220.00	4.98	X Brace	No	No	1.0000	0.0000

Tower Section	Tower Elevation ft	Diagonal Spacing ft	Bracing Type	Has K Brace End Panels	Has Horizontals	Top Girt Offset in	Bottom Girt Offset in
T3	220.00-200.00	5.00	X Brace	No	No	0.0000	0.0000
T4	200.00-180.00	5.00	X Brace	No	No	0.0000	0.0000
T5	180.00-160.00	5.00	X Brace	No	No	0.0000	0.0000
T6	160.00-140.00	6.67	X Brace	No	No	0.0000	0.0000
T7	140.00-120.00	6.67	X Brace	No	No	0.0000	0.0000
T8	120.00-100.00	10.00	X Brace	No	No	0.0000	0.0000
T9	100.00-80.00	10.00	X Brace	No	No	0.0000	0.0000
T10	80.00-60.00	20.00	K2 Down	No	Yes	0.0000	0.0000
T11	60.00-40.00	20.00	K2 Down	No	Yes	0.0000	0.0000
T12	40.00-20.00	20.00	K2 Down	No	Yes	0.0000	0.0000
T13	20.00-0.00	20.00	K2 Down	No	Yes	0.0000	0.0000

Tower Section Geometry *(cont'd)*

Tower Elevation ft	Leg Type	Leg Size	Leg Grade	Diagonal Type	Diagonal Size	Diagonal Grade
T1 263.00-240.00	Pipe	P4x.237	A500-50 (50 ksi)	Equal Angle	L3x3x3/16	A36 (36 ksi)
T2 240.00-220.00	Pipe	P4.5x.438	A500-50 (50 ksi)	Equal Angle	L3x3x3/16	A36 (36 ksi)
T3 220.00-200.00	Pipe	P6x.562	A500-50 (50 ksi)	Equal Angle	L3 1/2x3 1/2x1/4	A36 (36 ksi)
T4 200.00-180.00	Pipe	P8x.5	A500-50 (50 ksi)	Double Equal Angle	2L2 1/2x2 1/2x3/16	A36 (36 ksi)
T5 180.00-160.00	Pipe	P10x.593	A500-50 (50 ksi)	Double Equal Angle	2L2 1/2x2 1/2x3/16	A36 (36 ksi)
T6 160.00-140.00	Pipe	P10x.593	A500-50 (50 ksi)	Double Equal Angle	2L2 1/2x2 1/2x3/16	A36 (36 ksi)
T7 140.00-120.00	Pipe	P10x.718	A500-50 (50 ksi)	Double Equal Angle	2L3x3x3/16	A36 (36 ksi)
T8 120.00-100.00	Pipe	P12x.687	A500-50 (50 ksi)	Double Equal Angle	2L3x3x1/4	A36 (36 ksi)
T9 100.00-80.00	Pipe	P12x.75	A500-50 (50 ksi)	Double Equal Angle	2L3x3x1/4	A36 (36 ksi)
T10 80.00-60.00	Pipe	P12x.75	A500-50 (50 ksi)	Double Equal Angle	2L3 1/2x3 1/2x5/16	A36 (36 ksi)
T11 60.00-40.00	Pipe	P12x.843	A500-50 (50 ksi)	Double Equal Angle	2L3 1/2x3 1/2x5/16	A36 (36 ksi)
T12 40.00-20.00	Pipe	P12x1	A500-50 (50 ksi)	Double Equal Angle	2L3 1/2x3 1/2x5/16	A36 (36 ksi)
T13 20.00-0.00	Pipe	P12x1	A500-50 (50 ksi)	Double Equal Angle	2L3 1/2x3 1/2x5/16	A36 (36 ksi)

Tower Section Geometry *(cont'd)*

Tower Elevation ft	Top Girt Type	Top Girt Size	Top Girt Grade	Bottom Girt Type	Bottom Girt Size	Bottom Girt Grade
T1 263.00-240.00	Equal Angle	L1 1/2x1 1/2x1/4	A36 (36 ksi)	Solid Round		A36 (36 ksi)

Tower Section Geometry *(cont'd)*

Tower Elevation ft	*No. of Mid Girts*	*Mid Girt Type*	*Mid Girt Size*	*Mid Girt Grade*	*Horizontal Type*	*Horizontal Size*	*Horizontal Grade*
T10 80.00-60.00	None	Flat Bar		A36 (36 ksi)	Double Equal Angle	2L3 1/2x3 1/2x5/16	A36 (36 ksi)
T11 60.00-40.00	None	Flat Bar		A36 (36 ksi)	Double Equal Angle	2L3 1/2x3 1/2x5/16	A36 (36 ksi)
T12 40.00-20.00	None	Flat Bar		A36 (36 ksi)	Double Equal Angle	2L3 1/2x3 1/2x5/16	A36 (36 ksi)
T13 20.00-0.00	None	Flat Bar		A36 (36 ksi)	Double Equal Angle	2L3 1/2x3 1/2x5/16	A36 (36 ksi)

Tower Section Geometry *(cont'd)*

Tower Elevation ft	*Secondary Horizontal Type*	*Secondary Horizontal Size*	*Secondary Horizontal Grade*	*Inner Bracing Type*	*Inner Bracing Size*	*Inner Bracing Grade*
T10 80.00-60.00	Solid Round		A572-50 (50 ksi)	Equal Angle	L1 1/2x1 1/2x1/8	A572-50 (50 ksi)
T11 60.00-40.00	Solid Round		A572-50 (50 ksi)	Equal Angle	L1 1/2x1 1/2x1/8	A572-50 (50 ksi)
T12 40.00-20.00	Solid Round		A572-50 (50 ksi)	Equal Angle	L1 1/2x1 1/2x1/8	A572-50 (50 ksi)
T13 20.00-0.00	Solid Round		A572-50 (50 ksi)	Equal Angle	L1 1/2x1 1/2x1/8	A572-50 (50 ksi)

Tower Section Geometry *(cont'd)*

Tower Elevation ft	*Redundant Bracing Grade*		*Redundant Type*	*Redundant Size*	*K Factor*
T10 80.00-60.00	A36 (36 ksi)	Horizontal (1)	Equal Angle	L3 1/2x3 1/2x3/16	1
		Horizontal (2)		L3 1/2x3 1/2x3/16	
		Diagonal (1)	Equal Angle	L3 1/2x3 1/2x1/4	1
		Diagonal (2)		L3 1/2x3 1/2x1/4	
		Hip (1)	Single Angle	L1 1/2x1 1/2x1/8	1
		Hip (2)		L1 1/2x1 1/2x1/8	
		Hip Diagonal		L2x2x1/8	1
T11 60.00-40.00	A36 (36 ksi)	Horizontal (1)	Equal Angle	L3 1/2x3 1/2x1/4	1
		Horizontal (2)		L3 1/2x3 1/2x1/4	
		Diagonal (1)	Equal Angle	L3 1/2x3 1/2x1/4	1
		Diagonal (2)		L3 1/2x3 1/2x1/4	
		Hip (1)	Single Angle	L1 1/2x1 1/2x1/8	1
		Hip (2)		L1 1/2x1 1/2x1/8	

Tower Elevation ft	Redundant Bracing Grade		Redundant Type	Redundant Size	K Factor
		Hip Diagonal		L2x2x1/8	1
T12 40.00-20.00	A36 (36 ksi)	Horizontal (1)	Equal Angle	L3 1/2x3 1/2x1/4	1
		Horizontal (2)		L3 1/2x3 1/2x1/4	
		Diagonal (1)	Equal Angle	L3 1/2x3 1/2x5/16	1
		Diagonal (2)		L3 1/2x3 1/2x5/16	
		Hip (1)	Single Angle	L1 1/2x1 1/2x1/8	1
		Hip (2)		L1 1/2x1 1/2x1/8	
		Hip Diagonal		L2x2x1/8	1
T13 20.00-0.00	A36 (36 ksi)	Horizontal (1)	Equal Angle	L3 1/2x3 1/2x5/16	1
		Horizontal (2)		L3 1/2x3 1/2x5/16	
		Diagonal (1)	Equal Angle	L3 1/2x3 1/2x3/8	1
		Diagonal (2)		L3 1/2x3 1/2x3/8	
		Hip (1)	Single Angle	L1 1/2x1 1/2x1/8	1
		Hip (2)		L1 1/2x1 1/2x1/8	
		Hip Diagonal		L2x2x1/8	1

Tower Section Geometry *(cont'd)*

Tower Elevation ft	Gusset Area (per face) ft^2	Gusset Thickness in	Gusset Grade	Adjust. Factor A_f	Adjust. Factor A_r	Weight Mult.	Double Angle Stitch Bolt Spacing Diagonals in	Double Angle Stitch Bolt Spacing Horizontals in
T1 263.00-240.00	0.00	0.3750	A36 (36 ksi)	1	1	1	Mid-Pt	36.0000
T2 240.00-220.00	0.00	0.3750	A36 (36 ksi)	1	1	1	Mid-Pt	36.0000
T3 220.00-200.00	0.00	0.3750	A36 (36 ksi)	1	1	1	Mid-Pt	36.0000
T4 200.00-180.00	0.00	0.3750	A36 (36 ksi)	1	1	1	Mid-Pt	36.0000
T5 180.00-160.00	0.00	0.3750	A36 (36 ksi)	1	1	1	Mid-Pt	36.0000
T6 160.00-140.00	0.00	0.3750	A36 (36 ksi)	1	1	1	Mid-Pt	36.0000
T7 140.00-120.00	0.00	0.3750	A36 (36 ksi)	1	1	1	Mid-Pt	36.0000
T8 120.00-100.00	0.00	0.3750	A36 (36 ksi)	1	1	1	Mid-Pt	36.0000
T9 100.00-80.00	0.00	0.3750	A36 (36 ksi)	1	1	1	Mid-Pt	36.0000
T10 80.00-60.00	0.00	0.5000	A36 (36 ksi)	1	1	1	Mid-Pt	36.0000
T11 60.00-40.00	0.00	0.5000	A36 (36 ksi)	1	1	1	Mid-Pt	36.0000
T12 40.00-20.00	0.00	0.5000	A36 (36 ksi)	1	1	1	Mid-Pt	36.0000
T13 20.00-0.00	0.00	0.5000	A36 (36 ksi)	1	1	1	Mid-Pt	36.0000

Tower Section Geometry *(cont'd)*

K Factors[1]

Tower Elevation ft	Calc K Single Angles	Calc K Solid Rounds	Legs	X Brace Diags X Y	K Brace Diags X Y	Single Diags X Y	Girts X Y	Horiz. X Y	Sec. Horiz. X Y	Inner Brace X Y
T1 263.00-240.00	No	No	1	1	1	1	1	1	1	1
				1	1	1	1	1	1	1
T2 240.00-220.00	No	No	1	1	1	1	1	1	1	1
				1	1	1	1	1	1	1
T3 220.00-200.00	No	No	1	1	1	1	1	1	1	1
				1	1	1	1	1	1	1
T4 200.00-180.00	No	No	1	1	1	1	1	1	1	1
				1	1	1	1	1	1	1
T5 180.00-160.00	No	No	1	1	1	1	1	1	1	1
				1	1	1	1	1	1	1
T6 160.00-140.00	No	No	1	1	1	1	1	1	1	1
				1	1	1	1	1	1	1
T7 140.00-120.00	No	No	1	1	1	1	1	1	1	1
				1	1	1	1	1	1	1
T8 120.00-100.00	No	No	1	1	1	1	1	1	1	1
				1	1	1	1	1	1	1
T9 100.00-80.00	No	No	1	1	1	1	1	1	1	1
				1	1	1	1	1	1	1
T10 80.00-60.00	No	No	1	1	1	1	1	1	1	1
				1	1	1	1	1	1	1
T11 60.00-40.00	No	No	1	1	1	1	1	1	1	1
				1	1	1	1	1	1	1
T12 40.00-20.00	No	No	1	1	1	1	1	1	1	1
				1	1	1	1	1	1	1
T13 20.00-0.00	No	No	1	1	1	1	1	1	1	1
				1	1	1	1	1	1	1

[1]*Note: K factors are applied to member segment lengths. K-braces without inner supporting members will have the K factor in the out-of-plane direction applied to the overall length.*

Tower Section Geometry *(cont'd)*

Tower Elevation ft	Leg		Diagonal		Top Girt		Bottom Girt		Mid Girt		Long Horizontal		Short Horizontal	
	Net Width Deduct in	U	Net Width Deduct in	U	Net Width Deduct in	U	Net Width Deduct in	U	Net Width Deduct in	U	Net Width Deduct in	U	Net Width Deduct in	U
T1 263.00-240.00	0.0000	1	0.0000	0.75	0.0000	0.75	0.0000	0.75	0.0000	0.75	0.0000	0.75	0.0000	0.75
T2 240.00-220.00	0.0000	1	0.0000	0.75	0.0000	0.75	0.0000	0.75	0.0000	0.75	0.0000	0.75	0.0000	0.75
T3 220.00-200.00	0.0000	1	0.0000	0.75	0.0000	0.75	0.0000	0.75	0.0000	0.75	0.0000	0.75	0.0000	0.75
T4 200.00-180.00	0.0000	1	0.0000	0.75	0.0000	0.75	0.0000	0.75	0.0000	0.75	0.0000	0.75	0.0000	0.75
T5 180.00-160.00	0.0000	1	0.0000	0.75	0.0000	0.75	0.0000	0.75	0.0000	0.75	0.0000	0.75	0.0000	0.75
T6 160.00-140.00	0.0000	1	0.0000	0.75	0.0000	0.75	0.0000	0.75	0.0000	0.75	0.0000	0.75	0.0000	0.75
T7 140.00-120.00	0.0000	1	0.0000	0.75	0.0000	0.75	0.0000	0.75	0.0000	0.75	0.0000	0.75	0.0000	0.75
T8 120.00-100.00	0.0000	1	0.0000	0.75	0.0000	0.75	0.0000	0.75	0.0000	0.75	0.0000	0.75	0.0000	0.75

Tower Elevation ft	Leg		Diagonal		Top Girt		Bottom Girt		Mid Girt		Long Horizontal		Short Horizontal	
	Net Width Deduct in	U	Net Width Deduct in	U	Net Width Deduct in	U	Net Width Deduct in	U	Net Width Deduct in	U	Net Width Deduct in	U	Net Width Deduct in	U
T9 100.00-80.00	0.0000	1	0.0000	0.75	0.0000	0.75	0.0000	0.75	0.0000	0.75	0.0000	0.75	0.0000	0.75
T10 80.00-60.00	0.0000	1	0.0000	0.75	0.0000	0.75	0.0000	0.75	0.0000	0.75	0.0000	0.75	0.0000	0.75
T11 60.00-40.00	0.0000	1	0.0000	0.75	0.0000	0.75	0.0000	0.75	0.0000	0.75	0.0000	0.75	0.0000	0.75
T12 40.00-20.00	0.0000	1	0.0000	0.75	0.0000	0.75	0.0000	0.75	0.0000	0.75	0.0000	0.75	0.0000	0.75
T13 20.00-0.00	0.0000	1	0.0000	0.75	0.0000	0.75	0.0000	0.75	0.0000	0.75	0.0000	0.75	0.0000	0.75

Tower Section Geometry *(cont'd)*

Tower Elevation ft	Leg Connection Type	Leg		Diagonal		Top Girt		Bottom Girt		Mid Girt		Long Horizontal		Short Horizontal	
		Bolt Size in	No.	Bolt Size in	No.	Bolt Size in	No.	Bolt Size in	No.	Bolt Size in	No.	Bolt Size in	No.	Bolt Size in	No.
T1 263.00-240.00	Flange	0.7500 A325X	4	0.6250 A325X	2	0.6250 A325X	0	0.0000 A325X	0	0.6250 A325X	0	0.6250 A325X	2	0.6250 A325X	0
T2 240.00-220.00	Flange	0.7500 A325X	4	0.6250 A325X	2	0.6250 A325X	0	0.6250 A325X	0	0.6250 A325X	0	0.6250 A325X	2	0.6250 A325X	0
T3 220.00-200.00	Flange	1.0000 A325X	6	0.6250 A325X	2	0.6250 A325X	0	0.6250 A325X	0	0.6250 A325X	0	0.6250 A325X	2	0.6250 A325X	0
T4 200.00-180.00	Flange	1.2500 A325X	6	0.6250 A325X	2	0.6250 A325X	0	0.6250 A325X	0	0.6250 A325X	0	0.6250 A325X	2	0.6250 A325X	0
T5 180.00-160.00	Flange	1.2500 A325X	6	0.6250 A325X	2	0.6250 A325X	0	0.6250 A325X	0	0.6250 A325X	0	0.6250 A325X	2	0.6250 A325X	0
T6 160.00-140.00	Flange	1.2500 A325X	8	0.6250 A325X	2	0.6250 A325X	0	0.6250 A325X	0	0.6250 A325X	0	0.6250 A325X	2	0.6250 A325X	0
T7 140.00-120.00	Flange	1.5000 A325X	8	0.6250 A325X	2	0.6250 A325X	0	0.6250 A325X	0	0.6250 A325X	0	0.6250 A325X	2	0.6250 A325X	0
T8 120.00-100.00	Flange	1.5000 A325X	8	0.6250 A325X	2	0.6250 A325X	0	0.6250 A325X	0	0.6250 A325X	0	0.6250 A325X	2	0.6250 A325X	0
T9 100.00-80.00	Flange	1.5000 A325X	8	0.6250 A325X	2	0.6250 A325X	0	0.6250 A325X	0	0.6250 A325X	0	0.6250 A325X	2	0.6250 A325X	0
T10 80.00-60.00	Flange	1.7500 A325X	8	0.6250 A325X	3	0.6250 A325X	0	0.6250 A325X	0	0.6250 A325X	0	0.6250 A325X	2	0.6250 A325X	0
T11 60.00-40.00	Flange	1.7500 A325X	8	0.6250 A325X	3	0.6250 A325X	0	0.6250 A325X	0	0.6250 A325X	0	0.6250 A325X	2	0.6250 A325X	0
T12 40.00-20.00	Flange	1.7500 A325X	8	0.6250 A325X	3	0.6250 A325X	0	0.6250 A325X	0	0.6250 A325X	0	0.6250 A325X	2	0.6250 A325X	0
T13 20.00-0.00	Flange	1.7500 A325X	8	0.6250 A325X	3	0.6250 A325X	0	0.6250 A325X	0	0.6250 A325X	0	0.6250 A325X	2	0.6250 A325X	0

Feed Line/Linear Appurtenances - Entered As Area

Description	Face or Leg	Allow Shield	Component Type	Placement ft	Total Number		C_AA_A ft^2/ft	Weight plf
FLC 158-50J (1 5/8 FOAM)	B	No	CaAa (Out Of Face)	263.00 - 0.00	12	No Ice	0.20	0.92
						1/2" Ice	0.30	2.46
						1" Ice	0.40	4.61
						2" Ice	0.60	10.74
FLC 158-50J (1 5/8 FOAM)	C	No	CaAa (Out Of Face)	263.00 - 0.00	12	No Ice	0.20	0.92
						1/2" Ice	0.30	2.46
						1" Ice	0.40	4.61
						2" Ice	0.60	10.74
Climbing Ladder	A	No	CaAa (In Face)	263.00 - 0.00	1	No Ice	0.29	7.90
						1/2" Ice	0.55	10.60
						1" Ice	0.81	13.30
						2" Ice	1.33	18.70
1/2	A	No	CaAa (Out Of Face)	263.00 - 0.00	3	No Ice	0.06	0.25
						1/2" Ice	0.16	0.91
						1" Ice	0.26	2.18
						2" Ice	0.46	6.55
1/2	C	No	CaAa (Out Of Face)	263.00 - 0.00	3	No Ice	0.06	0.25
						1/2" Ice	0.16	0.91
						1" Ice	0.26	2.18
						2" Ice	0.46	6.55

Feed Line/Linear Appurtenances Section Areas

Tower Section	Tower Elevation ft	Face	A_R ft^2	A_F ft^2	C_AA_A In Face ft^2	C_AA_A Out Face ft^2	Weight lb
T1	263.00-240.00	A	0.000	0.000	6.670	4.002	198.95
		B	0.000	0.000	0.000	55.751	253.92
		C	0.000	0.000	0.000	59.753	271.17
T2	240.00-220.00	A	0.000	0.000	5.800	3.480	173.00
		B	0.000	0.000	0.000	48.479	220.80
		C	0.000	0.000	0.000	51.959	235.80
T3	220.00-200.00	A	0.000	0.000	5.800	3.480	173.00
		B	0.000	0.000	0.000	48.479	220.80
		C	0.000	0.000	0.000	51.959	235.80
T4	200.00-180.00	A	0.000	0.000	5.800	3.480	173.00
		B	0.000	0.000	0.000	48.479	220.80
		C	0.000	0.000	0.000	51.959	235.80
T5	180.00-160.00	A	0.000	0.000	5.800	3.480	173.00
		B	0.000	0.000	0.000	48.479	220.80
		C	0.000	0.000	0.000	51.959	235.80
T6	160.00-140.00	A	0.000	0.000	5.800	3.480	173.00
		B	0.000	0.000	0.000	48.479	220.80
		C	0.000	0.000	0.000	51.959	235.80
T7	140.00-120.00	A	0.000	0.000	5.800	3.480	173.00
		B	0.000	0.000	0.000	48.479	220.80
		C	0.000	0.000	0.000	51.959	235.80
T8	120.00-100.00	A	0.000	0.000	5.800	3.480	173.00
		B	0.000	0.000	0.000	48.479	220.80
		C	0.000	0.000	0.000	51.959	235.80
T9	100.00-80.00	A	0.000	0.000	5.800	3.480	173.00
		B	0.000	0.000	0.000	48.479	220.80
		C	0.000	0.000	0.000	51.959	235.80
T10	80.00-60.00	A	0.000	0.000	5.800	3.480	173.00
		B	0.000	0.000	0.000	48.479	220.80
		C	0.000	0.000	0.000	51.959	235.80
T11	60.00-40.00	A	0.000	0.000	5.800	3.480	173.00
		B	0.000	0.000	0.000	48.479	220.80

Tower Section	Tower Elevation ft	Face	A_R ft^2	A_F ft^2	C_AA_A In Face ft^2	C_AA_A Out Face ft^2	Weight lb
		C	0.000	0.000	0.000	51.959	235.80
T12	40.00-20.00	A	0.000	0.000	5.800	3.480	173.00
		B	0.000	0.000	0.000	48.479	220.80
		C	0.000	0.000	0.000	51.959	235.80
T13	20.00-0.00	A	0.000	0.000	5.800	3.480	173.00
		B	0.000	0.000	0.000	48.479	220.80
		C	0.000	0.000	0.000	51.959	235.80

Feed Line/Linear Appurtenances Section Areas - With Ice

Tower Section	Tower Elevation ft	Face or Leg	Ice Thickness in	A_R ft^2	A_F ft^2	C_AA_A In Face ft^2	C_AA_A Out Face ft^2	Weight lb
T1	263.00-240.00	A	6.126	0.000	0.000	79.936	88.540	3683.39
		B		0.000	0.000	0.000	393.903	14122.86
		C		0.000	0.000	0.000	482.442	16863.71
T2	240.00-220.00	A	6.071	0.000	0.000	68.943	76.337	3170.78
		B		0.000	0.000	0.000	339.908	12152.59
		C		0.000	0.000	0.000	416.245	14509.65
T3	220.00-200.00	A	6.016	0.000	0.000	68.371	75.677	3138.32
		B		0.000	0.000	0.000	337.269	12023.29
		C		0.000	0.000	0.000	412.946	14353.83
T4	200.00-180.00	A	5.957	0.000	0.000	67.748	74.958	3102.95
		B		0.000	0.000	0.000	334.393	11882.40
		C		0.000	0.000	0.000	409.351	14184.04
T5	180.00-160.00	A	5.891	0.000	0.000	67.063	74.168	3064.05
		B		0.000	0.000	0.000	331.231	11727.46
		C		0.000	0.000	0.000	405.398	13997.32
T6	160.00-140.00	A	5.817	0.000	0.000	66.301	73.288	3020.80
		B		0.000	0.000	0.000	327.714	11555.16
		C		0.000	0.000	0.000	401.002	13789.68
T7	140.00-120.00	A	5.735	0.000	0.000	65.441	72.297	2972.00
		B		0.000	0.000	0.000	323.746	11360.79
		C		0.000	0.000	0.000	396.043	13555.45
T8	120.00-100.00	A	5.640	0.000	0.000	64.453	71.157	2915.92
		B		0.000	0.000	0.000	319.186	11137.38
		C		0.000	0.000	0.000	390.343	13286.21
T9	100.00-80.00	A	5.528	0.000	0.000	63.288	69.812	2849.78
		B		0.000	0.000	0.000	313.808	10873.90
		C		0.000	0.000	0.000	383.620	12968.68
T10	80.00-60.00	A	5.390	0.000	0.000	61.861	68.166	2768.79
		B		0.000	0.000	0.000	307.223	10551.29
		C		0.000	0.000	0.000	375.389	12579.90
T11	60.00-40.00	A	5.212	0.000	0.000	60.006	66.025	2663.50
		B		0.000	0.000	0.000	298.662	10131.86
		C		0.000	0.000	0.000	364.687	12074.45
T12	40.00-20.00	A	4.953	0.000	0.000	57.307	62.911	2510.27
		B		0.000	0.000	0.000	286.203	9521.48
		C		0.000	0.000	0.000	349.114	11338.87
T13	20.00-0.00	A	4.437	0.000	0.000	51.948	56.728	2206.08
		B		0.000	0.000	0.000	261.470	8309.77
		C		0.000	0.000	0.000	318.198	9878.62

Shielding Factor Ka

Tower Section	Feed Line Record No.	Description	Feed Line Segment Elev.	K_a No Ice	K_a Ice
T1	3	Climbing Ladder	240.00 - 263.00	1.0000	1.0000
T2	3	Climbing Ladder	220.00 - 240.00	1.0000	1.0000
T3	3	Climbing Ladder	200.00 - 220.00	1.0000	1.0000
T4	3	Climbing Ladder	180.00 - 200.00	1.0000	1.0000
T5	3	Climbing Ladder	160.00 - 180.00	1.0000	1.0000
T6	3	Climbing Ladder	140.00 - 160.00	1.0000	1.0000
T7	3	Climbing Ladder	120.00 - 140.00	1.0000	1.0000
T8	3	Climbing Ladder	100.00 - 120.00	1.0000	1.0000
T9	3	Climbing Ladder	80.00 - 100.00	1.0000	1.0000
T10	3	Climbing Ladder	60.00 - 80.00	1.0000	1.0000
T11	3	Climbing Ladder	40.00 - 60.00	1.0000	1.0000
T12	3	Climbing Ladder	20.00 - 40.00	1.0000	1.0000
T13	3	Climbing Ladder	0.00 - 20.00	1.0000	1.0000

Discrete Tower Loads

Description	Face or Leg	Offset Type	Offsets: Horz Lateral Vert ft ft ft	Azimuth Adjustment °	Placement ft		C_AA_A Front ft^2	C_AA_A Side ft^2	Weight lb
PiROD 15' Platform w/handrails (Monopole)	C	None		0.0000	263.00	No Ice	33.80	33.80	2043.00
						1/2" Ice	43.60	43.60	2748.00
						1" Ice	53.40	53.40	3453.00
						2" Ice	73.00	73.00	4863.00
PiROD 12' Low Profile Circular Platform	C	None		0.0000	200.00	No Ice	15.20	15.20	1550.00
						1/2" Ice	19.60	19.60	1810.00
						1" Ice	24.00	24.00	2070.00
						2" Ice	32.80	32.80	2590.00
DBXNY-6565B-VTM	A	From Face	1.00 7.00 0.00	0.0000	263.00	No Ice	8.41	6.73	75.25
						1/2" Ice	8.96	7.49	139.81
						1" Ice	9.52	8.27	213.70
						2" Ice	10.67	9.88	388.44
DBXNY-6565B-VTM	A	From Face	1.00 -7.00 0.00	0.0000	263.00	No Ice	8.41	6.73	75.25
						1/2" Ice	8.96	7.49	139.81
						1" Ice	9.52	8.27	213.70
						2" Ice	10.67	9.88	388.44
DBXNY-6565B-VTM	B	From Face	1.00 7.00 0.00	0.0000	263.00	No Ice	8.41	6.73	75.25
						1/2" Ice	8.96	7.49	139.81
						1" Ice	9.52	8.27	213.70
						2" Ice	10.67	9.88	388.44
DBXNY-6565B-VTM	B	From Face	1.00	0.0000	263.00	No Ice	8.41	6.73	75.25

Description	Face or Leg	Offset Type	Offsets: Horz Lateral Vert ft ft ft	Azimuth Adjustment °	Placement ft		C_AA_A Front ft^2	C_AA_A Side ft^2	Weight lb
			-7.00			1/2" Ice	8.96	7.49	139.81
			0.00			1" Ice	9.52	8.27	213.70
						2" Ice	10.67	9.88	388.44
DBXNY-6565B-VTM	C	From Face	1.00	0.0000	263.00	No Ice	8.41	6.73	75.25
			7.00			1/2" Ice	8.96	7.49	139.81
			0.00			1" Ice	9.52	8.27	213.70
						2" Ice	10.67	9.88	388.44
DBXNY-6565B-VTM	C	From Face	1.00	0.0000	263.00	No Ice	8.41	6.73	75.25
			-7.00			1/2" Ice	8.96	7.49	139.81
			0.00			1" Ice	9.52	8.27	213.70
						2" Ice	10.67	9.88	388.44
DBXNY-6565B-VTM	A	From Face	1.00	0.0000	230.00	No Ice	8.41	6.73	75.25
			7.00			1/2" Ice	8.96	7.49	139.81
			0.00			1" Ice	9.52	8.27	213.70
						2" Ice	10.67	9.88	388.44
DBXNY-6565B-VTM	A	From Face	1.00	0.0000	230.00	No Ice	8.41	6.73	75.25
			-7.00			1/2" Ice	8.96	7.49	139.81
			0.00			1" Ice	9.52	8.27	213.70
						2" Ice	10.67	9.88	388.44
DBXNY-6565B-VTM	B	From Face	1.00	0.0000	230.00	No Ice	8.41	6.73	75.25
			7.00			1/2" Ice	8.96	7.49	139.81
			0.00			1" Ice	9.52	8.27	213.70
						2" Ice	10.67	9.88	388.44
DBXNY-6565B-VTM	B	From Face	1.00	0.0000	230.00	No Ice	8.41	6.73	75.25
			-7.00			1/2" Ice	8.96	7.49	139.81
			0.00			1" Ice	9.52	8.27	213.70
						2" Ice	10.67	9.88	388.44
DBXNY-6565B-VTM	C	From Face	1.00	0.0000	230.00	No Ice	8.41	6.73	75.25
			7.00			1/2" Ice	8.96	7.49	139.81
			0.00			1" Ice	9.52	8.27	213.70
						2" Ice	10.67	9.88	388.44
DBXNY-6565B-VTM	C	From Face	1.00	0.0000	230.00	No Ice	8.41	6.73	75.25
			-7.00			1/2" Ice	8.96	7.49	139.81
			0.00			1" Ice	9.52	8.27	213.70
						2" Ice	10.67	9.88	388.44
JAMPRO JDH-LV2	C	From Leg	0.33	0.0000	198.00	No Ice	21.70	8.04	937.90
			0.00			1/2" Ice	22.62	10.26	1056.59
			0.00			1" Ice	23.56	12.50	1190.72
						2" Ice	25.45	15.72	1502.01
JAMPRO JCPB-1H	C	From Leg	3.00	0.0000	180.00	No Ice	2.90	2.90	150.00
			0.00			1/2" Ice	4.50	4.50	235.00
			0.00			1" Ice	6.10	6.10	320.00
						2" Ice	9.30	9.30	490.00
Andrew MD-S12 Ice Shield	B	From Leg	2.00	0.0000	254.00	No Ice	1.33	5.60	763.00
			0.00			1/2" Ice	0.00	0.00	1147.00
			0.00			1" Ice	0.00	0.00	1531.00
						2" Ice	0.00	0.00	2299.00
Andrew MD-S12 Ice Shield	C	From Leg	2.00	0.0000	254.00	No Ice	1.33	5.60	763.00
			0.00			1/2" Ice	0.00	0.00	1147.00
			0.00			1" Ice	0.00	0.00	1531.00
						2" Ice	0.00	0.00	2299.00
Andrew MD-S12 Ice Shield	B	From Leg	2.00	0.0000	224.00	No Ice	1.33	5.60	763.00
			0.00			1/2" Ice	0.00	0.00	1147.00
			0.00			1" Ice	0.00	0.00	1531.00
						2" Ice	0.00	0.00	2299.00
Andrew MD-S12 Ice Shield	C	From Leg	2.00	0.0000	224.00	No Ice	1.33	5.60	763.00
			0.00			1/2" Ice	0.00	0.00	1147.00

Description	Face or Leg	Offset Type	Offsets: Horz Lateral Vert ft ft ft	Azimuth Adjustment °	Placement ft		C_AA_A Front ft^2	C_AA_A Side ft^2	Weight lb
			0.00			1" Ice	0.00	0.00	1531.00
						2" Ice	0.00	0.00	2299.00
Andrew MD-S12 Ice Shield	B	From Leg	2.00	0.0000	218.00	No Ice	1.33	5.60	763.00
			0.00			1/2" Ice	0.00	0.00	1147.00
			0.00			1" Ice	0.00	0.00	1531.00
						2" Ice	0.00	0.00	2299.00
Flash Beacon Lighting	A	From Leg	0.00	0.0000	263.00	No Ice	2.70	2.70	50.00
			0.00			1/2" Ice	3.10	3.10	70.00
			0.00			1" Ice	3.50	3.50	90.00
						2" Ice	4.30	4.30	130.00
Flash Beacon Lighting	A	From Leg	0.00	0.0000	200.00	No Ice	2.70	2.70	50.00
			0.00			1/2" Ice	3.10	3.10	70.00
			0.00			1" Ice	3.50	3.50	90.00
						2" Ice	4.30	4.30	130.00
Flash Beacon Lighting	B	From Leg	0.00	0.0000	200.00	No Ice	2.70	2.70	50.00
			0.00			1/2" Ice	3.10	3.10	70.00
			0.00			1" Ice	3.50	3.50	90.00
						2" Ice	4.30	4.30	130.00
Flash Beacon Lighting	C	From Leg	0.00	0.0000	200.00	No Ice	2.70	2.70	50.00
			0.00			1/2" Ice	3.10	3.10	70.00
			0.00			1" Ice	3.50	3.50	90.00
						2" Ice	4.30	4.30	130.00

Dishes

Description	Face or Leg	Dish Type	Offset Type	Offsets: Horz Lateral Vert ft	Azimuth Adjustment °	3 dB Beam Width °	Elevation ft	Outside Diameter ft		Aperture Area ft^2	Weight lb
DAX12-59AD	B	Paraboloid w/Radome	From Leg	0.00	0.0000		248.00	12.00	No Ice	113.10	924.00
				0.00					1/2" Ice	114.67	588.66
				0.00					1" Ice	116.25	0.00
									2" Ice	119.40	0.00
DAX12-59AD	C	Paraboloid w/Radome	From Leg	0.00	0.0000		248.00	12.00	No Ice	113.10	924.00
				0.00					1/2" Ice	114.67	588.66
				0.00					1" Ice	116.25	0.00
									2" Ice	119.40	0.00
DAX12-59AD	B	Paraboloid w/Radome	From Leg	0.00	0.0000		218.00	12.00	No Ice	113.10	924.00
				0.00					1/2" Ice	114.67	588.66
				0.00					1" Ice	116.25	0.00
									2" Ice	119.40	0.00
DAX12-59AD	C	Paraboloid w/Radome	From Leg	0.00	0.0000		218.00	12.00	No Ice	113.10	924.00
				0.00					1/2" Ice	114.67	588.66
				0.00					1" Ice	116.25	0.00
									2" Ice	119.40	0.00
DAX12-59AD	B	Paraboloid w/Radome	From Leg	0.00	0.0000		210.00	12.00	No Ice	113.10	924.00
				0.00					1/2" Ice	114.67	588.66
				0.00					1" Ice	116.25	0.00
									2" Ice	119.40	0.00

Tower Pressures - No Ice

$G_H = 0.850$

Section Elevation ft	z ft	K_Z	q_z psf	A_G ft²	Face	A_F ft²	A_R ft²	A_{leg} ft²	Leg %	C_AA_A In Face ft²	C_AA_A Out Face ft²
T1 263.00-240.00	251.50	1.537	31	123.625	A	16.263	17.250	17.250	51.47	6.670	4.002
					B	16.263	17.250		51.47	0.000	55.751
					C	16.263	17.250		51.47	0.000	59.753
T2 240.00-220.00	230.00	1.508	31	125.007	A	14.436	15.019	15.019	50.99	5.800	3.480
					B	14.436	15.019		50.99	0.000	48.479
					C	14.436	15.019		50.99	0.000	51.959
T3 220.00-200.00	210.00	1.48	30	163.552	A	19.808	22.111	22.111	52.75	5.800	3.480
					B	19.808	22.111		52.75	0.000	48.479
					C	19.808	22.111		52.75	0.000	51.959
T4 200.00-180.00	190.00	1.449	29	201.889	A	16.395	28.787	28.787	63.71	5.800	3.480
					B	16.395	28.787		63.71	0.000	48.479
					C	16.395	28.787		63.71	0.000	51.959
T5 180.00-160.00	170.00	1.415	29	240.434	A	18.735	35.879	35.879	65.70	5.800	3.480
					B	18.735	35.879		65.70	0.000	48.479
					C	18.735	35.879		65.70	0.000	51.959
T6 160.00-140.00	150.00	1.378	28	275.434	A	16.865	35.879	35.879	68.02	5.800	3.480
					B	16.865	35.879		68.02	0.000	48.479
					C	16.865	35.879		68.02	0.000	51.959
T7 140.00-120.00	130.00	1.337	27	310.434	A	22.635	35.879	35.879	61.32	5.800	3.480
					B	22.635	35.879		61.32	0.000	48.479
					C	22.635	35.879		61.32	0.000	51.959
T8 120.00-100.00	110.00	1.291	26	348.770	A	17.994	42.554	42.554	70.28	5.800	3.480
					B	17.994	42.554		70.28	0.000	48.479
					C	17.994	42.554		70.28	0.000	51.959
T9 100.00-80.00	90.00	1.238	25	383.770	A	19.490	42.554	42.554	68.59	5.800	3.480
					B	19.490	42.554		68.59	0.000	48.479
					C	19.490	42.554		68.59	0.000	51.959
T10 80.00-60.00	70.00	1.174	24	418.770	A	37.115	42.554	42.554	53.41	5.800	3.480
					B	35.315	42.554		54.65	0.000	48.479
					C	33.515	42.554		55.94	0.000	51.959
T11 60.00-40.00	50.00	1.094	22	453.770	A	39.176	42.554	42.554	52.07	5.800	3.480
					B	37.273	42.554		53.31	0.000	48.479
					C	35.371	42.554		54.61	0.000	51.959
T12 40.00-20.00	30.00	0.982	20	488.770	A	41.255	42.554	42.554	50.78	5.800	3.480
					B	39.247	42.554		52.02	0.000	48.479
					C	37.238	42.554		53.33	0.000	51.959
T13 20.00-0.00	10.00	0.85	17	523.770	A	43.353	42.554	42.554	49.54	5.800	3.480
					B	41.236	42.554		50.79	0.000	48.479
					C	39.120	42.554		52.10	0.000	51.959

Tower Pressure - With Ice

$G_H = 0.850$

Section Elevation ft	z ft	K_Z	q_z psf	t_Z in	A_G ft²	Face	A_F ft²	A_R ft²	A_{leg} ft²	Leg %	C_AA_A In Face ft²	C_AA_A Out Face ft²

Section Elevation ft	z ft	K_Z	q_z psf	t_Z in	A_G ft^2	Face	A_F ft^2	A_R ft^2	A_{leg} ft^2	Leg %	C_AA_A In Face ft^2	C_AA_A Out Face ft^2
T1 263.00-240.00	251.50	1.537	5	6.1259	147.108	A	16.263	132.996	64.216	43.02	79.936	88.540
						B	16.263	132.996		43.02	0.000	393.903
						C	16.263	132.996		43.02	0.000	482.442
T2 240.00-220.00	230.00	1.508	5	6.0714	145.265	A	14.436	113.980	55.547	43.26	68.943	76.337
						B	14.436	113.980		43.26	0.000	339.908
						C	14.436	113.980		43.26	0.000	416.245
T3 220.00-200.00	210.00	1.48	5	6.0165	183.626	A	19.808	130.370	62.272	41.47	68.371	75.677
						B	19.808	130.370		41.47	0.000	337.269
						C	19.808	130.370		41.47	0.000	412.946
T4 200.00-180.00	190.00	1.449	5	5.9565	221.763	A	16.395	146.674	68.548	42.04	67.748	74.958
						B	16.395	146.674		42.04	0.000	334.393
						C	16.395	146.674		42.04	0.000	409.351
T5 180.00-160.00	170.00	1.415	5	5.8907	260.088	A	18.735	163.491	75.200	41.27	67.063	74.168
						B	18.735	163.491		41.27	0.000	331.231
						C	18.735	163.491		41.27	0.000	405.398
T6 160.00-140.00	150.00	1.378	5	5.8174	294.844	A	16.865	153.200	74.711	43.93	66.301	73.288
						B	16.865	153.200		43.93	0.000	327.714
						C	16.865	153.200		43.93	0.000	401.002
T7 140.00-120.00	130.00	1.337	5	5.7347	329.568	A	22.635	160.697	74.159	40.45	65.441	72.297
						B	22.635	160.697		40.45	0.000	323.746
						C	22.635	160.697		40.45	0.000	396.043
T8 120.00-100.00	110.00	1.291	4	5.6397	367.587	A	17.994	147.854	80.200	48.36	64.453	71.157
						B	17.994	147.854		48.36	0.000	319.186
						C	17.994	147.854		48.36	0.000	390.343
T9 100.00-80.00	90.00	1.238	4	5.5277	402.214	A	19.490	151.274	79.452	46.53	63.288	69.812
						B	19.490	151.274		46.53	0.000	313.808
						C	19.490	151.274		46.53	0.000	383.620
T10 80.00-60.00	70.00	1.174	4	5.3905	436.756	A	37.115	209.420	78.537	31.86	61.861	68.166
						B	35.315	199.719		33.42	0.000	307.223
						C	33.515	190.018		35.13	0.000	375.389
T11 60.00-40.00	50.00	1.094	4	5.2121	471.161	A	39.176	211.056	77.346	30.91	60.006	66.025
						B	37.273	201.140		32.44	0.000	298.662
						C	35.371	191.224		34.13	0.000	364.687
T12 40.00-20.00	30.00	0.982	3	4.9526	505.295	A	41.255	209.533	75.613	30.15	57.307	62.911
						B	39.247	199.588		31.66	0.000	286.203
						C	37.238	189.642		33.33	0.000	349.114
T13 20.00-0.00	10.00	0.85	3	4.4373	538.575	A	43.353	198.377	72.174	29.86	51.948	56.728
						B	41.236	188.985		31.35	0.000	261.470
						C	39.120	179.594		33.00	0.000	318.198

Tower Pressure - Service

$G_H = 0.850$

Section Elevation ft	z ft	K_Z	q_z psf	A_G ft^2	Face	A_F ft^2	A_R ft^2	A_{leg} ft^2	Leg %	C_AA_A In Face ft^2	C_AA_A Out Face ft^2
T1 263.00-240.00	251.50	1.537	12	123.625	A	16.263	17.250	17.250	51.47	6.670	4.002
					B	16.263	17.250		51.47	0.000	55.751
					C	16.263	17.250		51.47	0.000	59.753
T2 240.00-220.00	230.00	1.508	12	125.007	A	14.436	15.019	15.019	50.99	5.800	3.480
					B	14.436	15.019		50.99	0.000	48.479
					C	14.436	15.019		50.99	0.000	51.959
T3 220.00-	210.00	1.48	12	163.552	A	19.808	22.111	22.111	52.75	5.800	3.480

Section Elevation ft	z ft	K_Z	q_z psf	A_G ft^2	Face	A_F ft^2	A_R ft^2	A_{leg} ft^2	Leg %	C_AA_A In Face ft^2	C_AA_A Out Face ft^2
200.00					B	19.808	22.111		52.75	0.000	48.479
					C	19.808	22.111		52.75	0.000	51.959
T4 200.00-180.00	190.00	1.449	11	201.889	A	16.395	28.787	28.787	63.71	5.800	3.480
					B	16.395	28.787		63.71	0.000	48.479
					C	16.395	28.787		63.71	0.000	51.959
T5 180.00-160.00	170.00	1.415	11	240.434	A	18.735	35.879	35.879	65.70	5.800	3.480
					B	18.735	35.879		65.70	0.000	48.479
					C	18.735	35.879		65.70	0.000	51.959
T6 160.00-140.00	150.00	1.378	11	275.434	A	16.865	35.879	35.879	68.02	5.800	3.480
					B	16.865	35.879		68.02	0.000	48.479
					C	16.865	35.879		68.02	0.000	51.959
T7 140.00-120.00	130.00	1.337	10	310.434	A	22.635	35.879	35.879	61.32	5.800	3.480
					B	22.635	35.879		61.32	0.000	48.479
					C	22.635	35.879		61.32	0.000	51.959
T8 120.00-100.00	110.00	1.291	10	348.770	A	17.994	42.554	42.554	70.28	5.800	3.480
					B	17.994	42.554		70.28	0.000	48.479
					C	17.994	42.554		70.28	0.000	51.959
T9 100.00-80.00	90.00	1.238	10	383.770	A	19.490	42.554	42.554	68.59	5.800	3.480
					B	19.490	42.554		68.59	0.000	48.479
					C	19.490	42.554		68.59	0.000	51.959
T10 80.00-60.00	70.00	1.174	9	418.770	A	37.115	42.554	42.554	53.41	5.800	3.480
					B	35.315	42.554		54.65	0.000	48.479
					C	33.515	42.554		55.94	0.000	51.959
T11 60.00-40.00	50.00	1.094	9	453.770	A	39.176	42.554	42.554	52.07	5.800	3.480
					B	37.273	42.554		53.31	0.000	48.479
					C	35.371	42.554		54.61	0.000	51.959
T12 40.00-20.00	30.00	0.982	8	488.770	A	41.255	42.554	42.554	50.78	5.800	3.480
					B	39.247	42.554		52.02	0.000	48.479
					C	37.238	42.554		53.33	0.000	51.959
T13 20.00-0.00	10.00	0.85	7	523.770	A	43.353	42.554	42.554	49.54	5.800	3.480
					B	41.236	42.554		50.79	0.000	48.479
					C	39.120	42.554		52.10	0.000	51.959

Tower Forces - No Ice - Wind Normal To Face

Section Elevation ft	Add Weight lb	Self Weight lb	Face	e	C_F	q_z psf	D_F	D_R	A_E ft^2	F lb	w plf	Ctrl. Face
T1 263.00-240.00	724.04	1535.07	A	0.271	2.376	31	1	1	25.747	4960.50	215.67	C
			B	0.271	2.376		1	1	25.747			
			C	0.271	2.376		1	1	25.747			
T2 240.00-220.00	629.60	1829.07	A	0.236	2.481	31	1	1	22.501	4301.79	215.09	C
			B	0.236	2.481		1	1	22.501			
			C	0.236	2.481		1	1	22.501			
T3 220.00-200.00	629.60	3447.46	A	0.256	2.419	30	1	1	30.416	4672.25	233.61	C
			B	0.256	2.419		1	1	30.416			
			C	0.256	2.419		1	1	30.416			
T4 200.00-180.00	629.60	4171.41	A	0.224	2.518	29	1	1	29.628	4601.07	230.05	C
			B	0.224	2.518		1	1	29.628			
			C	0.224	2.518		1	1	29.628			
T5 180.00-160.00	629.60	5661.50	A	0.227	2.508	29	1	1	35.302	4833.80	241.69	C
			B	0.227	2.508		1	1	35.302			
			C	0.227	2.508		1	1	35.302			
T6 160.00-140.00	629.60	5466.98	A	0.191	2.625	28	1	1	32.685	4642.97	232.15	C
			B	0.191	2.625		1	1	32.685			
			C	0.191	2.625		1	1	32.685			

Section Elevation ft	Add Weight lb	Self Weight lb	Face	e	C_F	q_z psf	D_F	D_R	A_E ft^2	F lb	w plf	Ctrl. Face
T7 140.00-120.00	629.60	6772.36	A	0.188	2.635	27	1	1	38.395	4859.57	242.98	C
			B	0.188	2.635		1	1	38.395			
			C	0.188	2.635		1	1	38.395			
T8 120.00-100.00	629.60	7579.08	A	0.174	2.687	26	1	1	36.338	4612.79	230.64	C
			B	0.174	2.687		1	1	36.338			
			C	0.174	2.687		1	1	36.338			
T9 100.00-80.00	629.60	8214.76	A	0.162	2.729	25	1	1	37.563	4526.22	226.31	C
			B	0.162	2.729		1	1	37.563			
			C	0.162	2.729		1	1	37.563			
T10 80.00-60.00	629.60	9489.27	A	0.19	2.629	24	1	1	55.848	5189.26	259.46	A
			B	0.186	2.644		1	1	53.947			
			C	0.182	2.658		1	1	52.046			
T11 60.00-40.00	629.60	10405.18	A	0.18	2.664	22	1	1	57.671	4962.54	248.13	A
			B	0.176	2.678		1	1	55.671			
			C	0.172	2.693		1	1	53.672			
T12 40.00-20.00	629.60	11819.26	A	0.171	2.694	20	1	1	59.550	4571.80	228.59	A
			B	0.167	2.709		1	1	57.448			
			C	0.163	2.723		1	1	55.348			
T13 20.00-0.00	629.60	12241.38	A	0.164	2.721	17	1	1	61.479	4056.24	202.81	A
			B	0.16	2.735		1	1	59.272			
			C	0.156	2.75		1	1	57.067			
Sum Weight:	8279.24	88632.79						OTM	7946146.72 lb-ft	60790.80		

Tower Forces - No Ice - Wind 60 To Face

Section Elevation ft	Add Weight lb	Self Weight lb	Face	e	C_F	q_z psf	D_F	D_R	A_E ft^2	F lb	w plf	Ctrl. Face
T1 263.00-240.00	724.04	1535.07	A	0.271	2.376	31	0.8	1	22.494	4755.89	206.78	C
			B	0.271	2.376		0.8	1	22.494			
			C	0.271	2.376		0.8	1	22.494			
T2 240.00-220.00	629.60	1829.07	A	0.236	2.481	31	0.8	1	19.614	4115.63	205.78	C
			B	0.236	2.481		0.8	1	19.614			
			C	0.236	2.481		0.8	1	19.614			
T3 220.00-200.00	629.60	3447.46	A	0.256	2.419	30	0.8	1	26.454	4428.00	221.40	C
			B	0.256	2.419		0.8	1	26.454			
			C	0.256	2.419		0.8	1	26.454			
T4 200.00-180.00	629.60	4171.41	A	0.224	2.518	29	0.8	1	26.349	4394.95	219.75	C
			B	0.224	2.518		0.8	1	26.349			
			C	0.224	2.518		0.8	1	26.349			
T5 180.00-160.00	629.60	5661.50	A	0.227	2.508	29	0.8	1	31.554	4604.68	230.23	C
			B	0.227	2.508		0.8	1	31.554			
			C	0.227	2.508		0.8	1	31.554			
T6 160.00-140.00	629.60	5466.98	A	0.191	2.625	28	0.8	1	29.312	4432.72	221.64	C
			B	0.191	2.625		0.8	1	29.312			
			C	0.191	2.625		0.8	1	29.312			
T7 140.00-120.00	629.60	6772.36	A	0.188	2.635	27	0.8	1	33.868	4584.70	229.23	C
			B	0.188	2.635		0.8	1	33.868			
			C	0.188	2.635		0.8	1	33.868			
T8 120.00-100.00	629.60	7579.08	A	0.174	2.687	26	0.8	1	32.739	4397.70	219.88	C
			B	0.174	2.687		0.8	1	32.739			
			C	0.174	2.687		0.8	1	32.739			

Section Elevation ft	Add Weight lb	Self Weight lb	Face	e	C_F	q_z psf	D_F	D_R	A_E ft^2	F lb	w plf	Ctrl. Face
T9 100.00-80.00	629.60	8214.76	A	0.162	2.729	25	0.8	1	33.665	4299.36	214.97	C
			B	0.162	2.729		0.8	1	33.665			
			C	0.162	2.729		0.8	1	33.665			
T10 80.00-60.00	629.60	9489.27	A	0.19	2.629	24	0.8	1	48.426	4794.52	239.73	A
			B	0.186	2.644		0.8	1	46.884			
			C	0.182	2.658		0.8	1	45.343			
T11 60.00-40.00	629.60	10405.18	A	0.18	2.664	22	0.8	1	49.835	4569.23	228.46	A
			B	0.176	2.678		0.8	1	48.216			
			C	0.172	2.693		0.8	1	46.598			
T12 40.00-20.00	629.60	11819.26	A	0.171	2.694	20	0.8	1	51.299	4195.62	209.78	A
			B	0.167	2.709		0.8	1	49.599			
			C	0.163	2.723		0.8	1	47.900			
T13 20.00-0.00	629.60	12241.38	A	0.164	2.721	17	0.8	1	52.808	3710.79	185.54	A
			B	0.16	2.735		0.8	1	51.025			
			C	0.156	2.75		0.8	1	49.243			
Sum Weight:	8279.24	88632.79						OTM	7549077.65 lb-ft	57283.78		

Tower Forces - No Ice - Wind 90 To Face

Section Elevation ft	Add Weight lb	Self Weight lb	Face	e	C_F	q_z psf	D_F	D_R	A_E ft^2	F lb	w plf	Ctrl. Face
T1 263.00-240.00	724.04	1535.07	A	0.271	2.376	31	0.85	1	23.307	4807.04	209.00	C
			B	0.271	2.376		0.85	1	23.307			
			C	0.271	2.376		0.85	1	23.307			
T2 240.00-220.00	629.60	1829.07	A	0.236	2.481	31	0.85	1	20.336	4162.17	208.11	C
			B	0.236	2.481		0.85	1	20.336			
			C	0.236	2.481		0.85	1	20.336			
T3 220.00-200.00	629.60	3447.46	A	0.256	2.419	30	0.85	1	27.444	4489.06	224.45	C
			B	0.256	2.419		0.85	1	27.444			
			C	0.256	2.419		0.85	1	27.444			
T4 200.00-180.00	629.60	4171.41	A	0.224	2.518	29	0.85	1	27.169	4446.48	222.32	C
			B	0.224	2.518		0.85	1	27.169			
			C	0.224	2.518		0.85	1	27.169			
T5 180.00-160.00	629.60	5661.50	A	0.227	2.508	29	0.85	1	32.491	4661.96	233.10	C
			B	0.227	2.508		0.85	1	32.491			
			C	0.227	2.508		0.85	1	32.491			
T6 160.00-140.00	629.60	5466.98	A	0.191	2.625	28	0.85	1	30.156	4485.28	224.26	C
			B	0.191	2.625		0.85	1	30.156			
			C	0.191	2.625		0.85	1	30.156			
T7 140.00-120.00	629.60	6772.36	A	0.188	2.635	27	0.85	1	35.000	4653.41	232.67	C
			B	0.188	2.635		0.85	1	35.000			
			C	0.188	2.635		0.85	1	35.000			
T8 120.00-100.00	629.60	7579.08	A	0.174	2.687	26	0.85	1	33.639	4451.47	222.57	C
			B	0.174	2.687		0.85	1	33.639			
			C	0.174	2.687		0.85	1	33.639			
T9 100.00-80.00	629.60	8214.76	A	0.162	2.729	25	0.85	1	34.640	4356.07	217.80	C
			B	0.162	2.729		0.85	1	34.640			
			C	0.162	2.729		0.85	1	34.640			
T10 80.00-60.00	629.60	9489.27	A	0.19	2.629	24	0.85	1	50.281	4893.21	244.66	A
			B	0.186	2.644		0.85	1	48.649			
			C	0.182	2.658		0.85	1	47.019			

Section Elevation ft	Add Weight lb	Self Weight lb	Face	e	C_F	q_z psf	D_F	D_R	A_E ft^2	F lb	w plf	Ctrl. Face
T11 60.00-40.00	629.60	10405.18	A	0.18	2.664	22	0.85	1	51.794	4667.56	233.38	A
			B	0.176	2.678		0.85	1	50.080			
			C	0.172	2.693		0.85	1	48.366			
T12 40.00-20.00	629.60	11819.26	A	0.171	2.694	20	0.85	1	53.362	4289.67	214.48	A
			B	0.167	2.709		0.85	1	51.561			
			C	0.163	2.723		0.85	1	49.762			
T13 20.00-0.00	629.60	12241.38	A	0.164	2.721	17	0.85	1	54.976	3797.15	189.86	A
			B	0.16	2.735		0.85	1	53.087			
			C	0.156	2.75		0.85	1	51.199			
Sum Weight:	8279.24	88632.79						OTM	7648344.92 lb-ft	58160.53		

Tower Forces - With Ice - Wind Normal To Face

Section Elevation ft	Add Weight lb	Self Weight lb	Face	e	C_F	q_z psf	D_F	D_R	A_E ft^2	F lb	w plf	Ctrl. Face
T1 263.00-240.00	34669.96	23738.95	A	1	2.1	5	1	1	149.259	5793.34*	251.88	C
			B	1	2.1		1	1	149.259			
			C	1	2.1		1	1	149.259			
T2 240.00-220.00	29833.01	20699.31	A	0.884	1.902	5	1	1	123.004	5067.64	253.38	C
			B	0.884	1.902		1	1	123.004			
			C	0.884	1.902		1	1	123.004			
T3 220.00-200.00	29515.44	26678.82	A	0.818	1.83	5	1	1	137.068	5014.11	250.71	C
			B	0.818	1.83		1	1	137.068			
			C	0.818	1.83		1	1	137.068			
T4 200.00-180.00	29169.38	30884.72	A	0.735	1.782	5	1	1	139.108	4863.50	243.17	C
			B	0.735	1.782		1	1	139.108			
			C	0.735	1.782		1	1	139.108			
T5 180.00-160.00	28788.84	35803.84	A	0.701	1.776	5	1	1	151.413	4802.80	240.14	C
			B	0.701	1.776		1	1	151.413			
			C	0.701	1.776		1	1	151.413			
T6 160.00-140.00	28365.64	32608.90	A	0.577	1.82	5	1	1	128.595	4496.79	224.84	C
			B	0.577	1.82		1	1	128.595			
			C	0.577	1.82		1	1	128.595			
T7 140.00-120.00	27888.24	37500.35	A	0.556	1.838	5	1	1	137.844	4396.80	219.84	C
			B	0.556	1.838		1	1	137.844			
			C	0.556	1.838		1	1	137.844			
T8 120.00-100.00	27339.51	33659.87	A	0.451	1.972	4	1	1	115.557	4100.16	205.01	C
			B	0.451	1.972		1	1	115.557			
			C	0.451	1.972		1	1	115.557			
T9 100.00-80.00	26692.35	34971.36	A	0.425	2.017	4	1	1	117.395	3910.03	195.50	C
			B	0.425	2.017		1	1	117.395			
			C	0.425	2.017		1	1	117.395			
T10 80.00-60.00	25899.98	48870.63	A	0.564	1.83	4	1	1	188.280	4020.85	201.04	A
			B	0.538	1.855		1	1	176.378			
			C	0.512	1.885		1	1	164.902			
T11 60.00-40.00	24869.81	49426.09	A	0.531	1.863	4	1	1	187.394	3685.09	184.25	A
			B	0.506	1.892		1	1	175.711			
			C	0.481	1.926		1	1	164.426			
T12 40.00-20.00	23370.61	49485.35	A	0.496	1.905	3	1	1	184.370	3217.08	160.85	A
			B	0.473	1.938		1	1	173.093			
			C	0.449	1.975		1	1	162.173			

Section Elevation ft	Add Weight lb	Self Weight lb	Face	e	C_F	q_z psf	D_F	D_R	A_E ft^2	F lb	w plf	Ctrl. Face
T13 20.00-	20394.47	45640.14	A	0.449	1.975	3	1	1	174.026	2596.24	129.81	A
0.00			B	0.427	2.012		1	1	163.803			
			C	0.406	2.052		1	1	153.862			
Sum Weight:	356797.24	469968.32			*2.1A_g limit			OTM	8053295.48 lb-ft	55964.41		

Tower Forces - With Ice - Wind 60 To Face

Section Elevation ft	Add Weight lb	Self Weight lb	Face	e	C_F	q_z psf	D_F	D_R	A_E ft^2	F lb	w plf	Ctrl. Face
T1 263.00-	34669.96	23738.95	A	1	2.1	5	0.8	1	146.007	5793.34*	251.88	C
240.00			B	1	2.1		0.8	1	146.007			
			C	1	2.1		0.8	1	146.007			
T2 240.00-	29833.01	20699.31	A	0.884	1.902	5	0.8	1	120.116	5043.12	252.16	C
220.00			B	0.884	1.902		0.8	1	120.116			
			C	0.884	1.902		0.8	1	120.116			
T3 220.00-	29515.44	26678.82	A	0.818	1.83	5	0.8	1	133.106	4982.36	249.12	C
200.00			B	0.818	1.83		0.8	1	133.106			
			C	0.818	1.83		0.8	1	133.106			
T4 200.00-	29169.38	30884.72	A	0.735	1.782	5	0.8	1	135.829	4838.44	241.92	C
180.00			B	0.735	1.782		0.8	1	135.829			
			C	0.735	1.782		0.8	1	135.829			
T5 180.00-	28788.84	35803.84	A	0.701	1.776	5	0.8	1	147.666	4774.93	238.75	C
160.00			B	0.701	1.776		0.8	1	147.666			
			C	0.701	1.776		0.8	1	147.666			
T6 160.00-	28365.64	32608.90	A	0.577	1.82	5	0.8	1	125.222	4471.74	223.59	C
140.00			B	0.577	1.82		0.8	1	125.222			
			C	0.577	1.82		0.8	1	125.222			
T7 140.00-	27888.24	37500.35	A	0.556	1.838	5	0.8	1	133.317	4363.87	218.19	C
120.00			B	0.556	1.838		0.8	1	133.317			
			C	0.556	1.838		0.8	1	133.317			
T8 120.00-	27339.51	33659.87	A	0.451	1.972	4	0.8	1	111.958	4073.05	203.65	C
100.00			B	0.451	1.972		0.8	1	111.958			
			C	0.451	1.972		0.8	1	111.958			
T9 100.00-	26692.35	34971.36	A	0.425	2.017	4	0.8	1	113.498	3881.22	194.06	C
80.00			B	0.425	2.017		0.8	1	113.498			
			C	0.425	2.017		0.8	1	113.498			
T10 80.00-	25899.98	48870.63	A	0.564	1.83	4	0.8	1	180.857	3973.64	198.68	A
60.00			B	0.538	1.855		0.8	1	169.315			
			C	0.512	1.885		0.8	1	158.199			
T11 60.00-	24869.81	49426.09	A	0.531	1.863	4	0.8	1	179.559	3637.84	181.89	A
40.00			B	0.506	1.892		0.8	1	168.257			
			C	0.481	1.926		0.8	1	157.351			
T12 40.00-	23370.61	49485.35	A	0.496	1.905	3	0.8	1	176.119	3171.39	158.57	A
20.00			B	0.473	1.938		0.8	1	165.244			
			C	0.449	1.975		0.8	1	154.726			
T13 20.00-	20394.47	45640.14	A	0.449	1.975	3	0.8	1	165.355	2553.16	127.66	A
0.00			B	0.427	2.012		0.8	1	155.556			
			C	0.406	2.052		0.8	1	146.038			
Sum Weight:	356797.24	469968.32			*2.1A_g limit			OTM	8010411.17 lb-ft	55558.11		

Tower Forces - With Ice - Wind 90 To Face

Section Elevation ft	Add Weight lb	Self Weight lb	Face	e	C_F	q_z psf	D_F	D_R	A_E ft^2	F lb	w plf	Ctrl. Face
T1 263.00-240.00	34669.96	23738.95	A	1	2.1	5	0.85	1	146.820	5793.34*	251.88	C
			B	1	2.1		0.85	1	146.820			
			C	1	2.1		0.85	1	146.820			
T2 240.00-220.00	29833.01	20699.31	A	0.884	1.902	5	0.85	1	120.838	5049.25	252.46	C
			B	0.884	1.902		0.85	1	120.838			
			C	0.884	1.902		0.85	1	120.838			
T3 220.00-200.00	29515.44	26678.82	A	0.818	1.83	5	0.85	1	134.097	4990.30	249.51	C
			B	0.818	1.83		0.85	1	134.097			
			C	0.818	1.83		0.85	1	134.097			
T4 200.00-180.00	29169.38	30884.72	A	0.735	1.782	5	0.85	1	136.649	4844.70	242.24	C
			B	0.735	1.782		0.85	1	136.649			
			C	0.735	1.782		0.85	1	136.649			
T5 180.00-160.00	28788.84	35803.84	A	0.701	1.776	5	0.85	1	148.603	4781.89	239.09	C
			B	0.701	1.776		0.85	1	148.603			
			C	0.701	1.776		0.85	1	148.603			
T6 160.00-140.00	28365.64	32608.90	A	0.577	1.82	5	0.85	1	126.065	4478.00	223.90	C
			B	0.577	1.82		0.85	1	126.065			
			C	0.577	1.82		0.85	1	126.065			
T7 140.00-120.00	27888.24	37500.35	A	0.556	1.838	5	0.85	1	134.449	4372.10	218.61	C
			B	0.556	1.838		0.85	1	134.449			
			C	0.556	1.838		0.85	1	134.449			
T8 120.00-100.00	27339.51	33659.87	A	0.451	1.972	4	0.85	1	112.858	4079.83	203.99	C
			B	0.451	1.972		0.85	1	112.858			
			C	0.451	1.972		0.85	1	112.858			
T9 100.00-80.00	26692.35	34971.36	A	0.425	2.017	4	0.85	1	114.472	3888.43	194.42	C
			B	0.425	2.017		0.85	1	114.472			
			C	0.425	2.017		0.85	1	114.472			
T10 80.00-60.00	25899.98	48870.63	A	0.564	1.83	4	0.85	1	182.713	3985.44	199.27	A
			B	0.538	1.855		0.85	1	171.081			
			C	0.512	1.885		0.85	1	159.874			
T11 60.00-40.00	24869.81	49426.09	A	0.531	1.863	4	0.85	1	181.518	3649.65	182.48	A
			B	0.506	1.892		0.85	1	170.120			
			C	0.481	1.926		0.85	1	159.120			
T12 40.00-20.00	23370.61	49485.35	A	0.496	1.905	3	0.85	1	178.182	3182.82	159.14	A
			B	0.473	1.938		0.85	1	167.206			
			C	0.449	1.975		0.85	1	156.588			
T13 20.00-0.00	20394.47	45640.14	A	0.449	1.975	3	0.85	1	167.523	2563.93	128.20	A
			B	0.427	2.012		0.85	1	157.618			
			C	0.406	2.052		0.85	1	147.994			
Sum Weight:	356797.24	469968.32			*2.1A_g limit			OTM	8021132.25 lb-ft	55659.69		

Tower Forces - Service - Wind Normal To Face

Section Elevation ft	Add Weight lb	Self Weight lb	Face	e	C_F	q_z psf	D_F	D_R	A_E ft^2	F lb	w plf	Ctrl. Face

Section Elevation ft	Add Weight lb	Self Weight lb	Face	e	C_F	q_z psf	D_F	D_R	A_E ft^2	F lb	w plf	Ctrl. Face
T1 263.00-240.00	724.04	1535.07	A	0.271	2.376	12	1	1	25.747	1917.10	83.35	C
			B	0.271	2.376		1	1	25.747			
			C	0.271	2.376		1	1	25.747			
T2 240.00-220.00	629.60	1829.07	A	0.236	2.481	12	1	1	22.501	1662.53	83.13	C
			B	0.236	2.481		1	1	22.501			
			C	0.236	2.481		1	1	22.501			
T3 220.00-200.00	629.60	3447.46	A	0.256	2.419	12	1	1	30.416	1805.70	90.29	C
			B	0.256	2.419		1	1	30.416			
			C	0.256	2.419		1	1	30.416			
T4 200.00-180.00	629.60	4171.41	A	0.224	2.518	11	1	1	29.628	1778.19	88.91	C
			B	0.224	2.518		1	1	29.628			
			C	0.224	2.518		1	1	29.628			
T5 180.00-160.00	629.60	5661.50	A	0.227	2.508	11	1	1	35.302	1868.14	93.41	C
			B	0.227	2.508		1	1	35.302			
			C	0.227	2.508		1	1	35.302			
T6 160.00-140.00	629.60	5466.98	A	0.191	2.625	11	1	1	32.685	1794.38	89.72	C
			B	0.191	2.625		1	1	32.685			
			C	0.191	2.625		1	1	32.685			
T7 140.00-120.00	629.60	6772.36	A	0.188	2.635	10	1	1	38.395	1878.09	93.90	C
			B	0.188	2.635		1	1	38.395			
			C	0.188	2.635		1	1	38.395			
T8 120.00-100.00	629.60	7579.08	A	0.174	2.687	10	1	1	36.338	1782.72	89.14	C
			B	0.174	2.687		1	1	36.338			
			C	0.174	2.687		1	1	36.338			
T9 100.00-80.00	629.60	8214.76	A	0.162	2.729	10	1	1	37.563	1749.26	87.46	C
			B	0.162	2.729		1	1	37.563			
			C	0.162	2.729		1	1	37.563			
T10 80.00-60.00	629.60	9489.27	A	0.19	2.629	9	1	1	55.848	2005.51	100.28	A
			B	0.186	2.644		1	1	53.947			
			C	0.182	2.658		1	1	52.046			
T11 60.00-40.00	629.60	10405.18	A	0.18	2.664	9	1	1	57.671	1917.89	95.89	A
			B	0.176	2.678		1	1	55.671			
			C	0.172	2.693		1	1	53.672			
T12 40.00-20.00	629.60	11819.26	A	0.171	2.694	8	1	1	59.550	1766.88	88.34	A
			B	0.167	2.709		1	1	57.448			
			C	0.163	2.723		1	1	55.348			
T13 20.00-0.00	629.60	12241.38	A	0.164	2.721	7	1	1	61.479	1567.63	78.38	A
			B	0.16	2.735		1	1	59.272			
			C	0.156	2.75		1	1	57.067			
Sum Weight:	8279.24	88632.79						OTM	3070974.58 lb-ft	23494.03		

Tower Forces - Service - Wind 60 To Face

Section Elevation ft	Add Weight lb	Self Weight lb	Face	e	C_F	q_z psf	D_F	D_R	A_E ft^2	F lb	w plf	Ctrl. Face
T1 263.00-240.00	724.04	1535.07	A	0.271	2.376	12	0.8	1	22.494	1838.03	79.91	C
			B	0.271	2.376		0.8	1	22.494			
			C	0.271	2.376		0.8	1	22.494			
T2 240.00-220.00	629.60	1829.07	A	0.236	2.481	12	0.8	1	19.614	1590.58	79.53	C
			B	0.236	2.481		0.8	1	19.614			
			C	0.236	2.481		0.8	1	19.614			

Section Elevation ft	Add Weight lb	Self Weight lb	Face	e	C_F	q_z psf	D_F	D_R	A_E ft^2	F lb	w plf	Ctrl. Face
T3 220.00-200.00	629.60	3447.46	A	0.256	2.419	12	0.8	1	26.454	1711.30	85.57	C
			B	0.256	2.419		0.8	1	26.454			
			C	0.256	2.419		0.8	1	26.454			
T4 200.00-180.00	629.60	4171.41	A	0.224	2.518	11	0.8	1	26.349	1698.53	84.93	C
			B	0.224	2.518		0.8	1	26.349			
			C	0.224	2.518		0.8	1	26.349			
T5 180.00-160.00	629.60	5661.50	A	0.227	2.508	11	0.8	1	31.554	1779.59	88.98	C
			B	0.227	2.508		0.8	1	31.554			
			C	0.227	2.508		0.8	1	31.554			
T6 160.00-140.00	629.60	5466.98	A	0.191	2.625	11	0.8	1	29.312	1713.13	85.66	C
			B	0.191	2.625		0.8	1	29.312			
			C	0.191	2.625		0.8	1	29.312			
T7 140.00-120.00	629.60	6772.36	A	0.188	2.635	10	0.8	1	33.868	1771.86	88.59	C
			B	0.188	2.635		0.8	1	33.868			
			C	0.188	2.635		0.8	1	33.868			
T8 120.00-100.00	629.60	7579.08	A	0.174	2.687	10	0.8	1	32.739	1699.59	84.98	C
			B	0.174	2.687		0.8	1	32.739			
			C	0.174	2.687		0.8	1	32.739			
T9 100.00-80.00	629.60	8214.76	A	0.162	2.729	10	0.8	1	33.665	1661.59	83.08	C
			B	0.162	2.729		0.8	1	33.665			
			C	0.162	2.729		0.8	1	33.665			
T10 80.00-60.00	629.60	9489.27	A	0.19	2.629	9	0.8	1	48.426	1852.96	92.65	A
			B	0.186	2.644		0.8	1	46.884			
			C	0.182	2.658		0.8	1	45.343			
T11 60.00-40.00	629.60	10405.18	A	0.18	2.664	9	0.8	1	49.835	1765.89	88.29	A
			B	0.176	2.678		0.8	1	48.216			
			C	0.172	2.693		0.8	1	46.598			
T12 40.00-20.00	629.60	11819.26	A	0.171	2.694	8	0.8	1	51.299	1621.50	81.07	A
			B	0.167	2.709		0.8	1	49.599			
			C	0.163	2.723		0.8	1	47.900			
T13 20.00-0.00	629.60	12241.38	A	0.164	2.721	7	0.8	1	52.808	1434.12	71.71	A
			B	0.16	2.735		0.8	1	51.025			
			C	0.156	2.75		0.8	1	49.243			
Sum Weight:	8279.24	88632.79						OTM	2917517.93 lb-ft	22138.66		

Tower Forces - Service - Wind 90 To Face

Section Elevation ft	Add Weight lb	Self Weight lb	Face	e	C_F	q_z psf	D_F	D_R	A_E ft^2	F lb	w plf	Ctrl. Face
T1 263.00-240.00	724.04	1535.07	A	0.271	2.376	12	0.85	1	23.307	1857.79	80.77	C
			B	0.271	2.376		0.85	1	23.307			
			C	0.271	2.376		0.85	1	23.307			
T2 240.00-220.00	629.60	1829.07	A	0.236	2.481	12	0.85	1	20.336	1608.57	80.43	C
			B	0.236	2.481		0.85	1	20.336			
			C	0.236	2.481		0.85	1	20.336			
T3 220.00-200.00	629.60	3447.46	A	0.256	2.419	12	0.85	1	27.444	1734.90	86.75	C
			B	0.256	2.419		0.85	1	27.444			
			C	0.256	2.419		0.85	1	27.444			
T4 200.00-180.00	629.60	4171.41	A	0.224	2.518	11	0.85	1	27.169	1718.44	85.92	C
			B	0.224	2.518		0.85	1	27.169			
			C	0.224	2.518		0.85	1	27.169			

Section Elevation ft	Add Weight lb	Self Weight lb	Face	e	C_F	q_z psf	D_F	D_R	A_E ft^2	F lb	w plf	Ctrl. Face
T5 180.00-160.00	629.60	5661.50	A	0.227	2.508	11	0.85	1	32.491	1801.72	90.09	C
			B	0.227	2.508		0.85	1	32.491			
			C	0.227	2.508		0.85	1	32.491			
T6 160.00-140.00	629.60	5466.98	A	0.191	2.625	11	0.85	1	30.156	1733.44	86.67	C
			B	0.191	2.625		0.85	1	30.156			
			C	0.191	2.625		0.85	1	30.156			
T7 140.00-120.00	629.60	6772.36	A	0.188	2.635	10	0.85	1	35.000	1798.42	89.92	C
			B	0.188	2.635		0.85	1	35.000			
			C	0.188	2.635		0.85	1	35.000			
T8 120.00-100.00	629.60	7579.08	A	0.174	2.687	10	0.85	1	33.639	1720.37	86.02	C
			B	0.174	2.687		0.85	1	33.639			
			C	0.174	2.687		0.85	1	33.639			
T9 100.00-80.00	629.60	8214.76	A	0.162	2.729	10	0.85	1	34.640	1683.51	84.18	C
			B	0.162	2.729		0.85	1	34.640			
			C	0.162	2.729		0.85	1	34.640			
T10 80.00-60.00	629.60	9489.27	A	0.19	2.629	9	0.85	1	50.281	1891.09	94.55	A
			B	0.186	2.644		0.85	1	48.649			
			C	0.182	2.658		0.85	1	47.019			
T11 60.00-40.00	629.60	10405.18	A	0.18	2.664	9	0.85	1	51.794	1803.89	90.19	A
			B	0.176	2.678		0.85	1	50.080			
			C	0.172	2.693		0.85	1	48.366			
T12 40.00-20.00	629.60	11819.26	A	0.171	2.694	8	0.85	1	53.362	1657.84	82.89	A
			B	0.167	2.709		0.85	1	51.561			
			C	0.163	2.723		0.85	1	49.762			
T13 20.00-0.00	629.60	12241.38	A	0.164	2.721	7	0.85	1	54.976	1467.50	73.37	A
			B	0.16	2.735		0.85	1	53.087			
			C	0.156	2.75		0.85	1	51.199			
Sum Weight:	8279.24	88632.79						OTM	2955882.09 lb-ft	22477.50		

Discrete Appurtenance Pressures - No Ice $G_H = 0.850$

Description	Aiming Azimuth °	Weight lb	$Offset_x$ ft	$Offset_z$ ft	z ft	K_z	q_z psf	C_AA_C Front ft^2	C_AA_C Side ft^2
PiROD 15' Platform w/handrails (Monopole)	0.0000	2043.00	0.00	0.00	263.00	1.551	31	33.80	33.80
PiROD 12' Low Profile Circular Platform	0.0000	1550.00	0.00	0.00	200.00	1.464	30	15.20	15.20
DBXNY-6565B-VTM	300.0000	75.25	1.38	-7.28	263.00	1.551	31	8.41	6.73
DBXNY-6565B-VTM	300.0000	75.25	-5.62	4.84	263.00	1.551	31	8.41	6.73
DBXNY-6565B-VTM	60.0000	75.25	5.62	4.84	263.00	1.551	31	8.41	6.73
DBXNY-6565B-VTM	60.0000	75.25	-1.38	-7.28	263.00	1.551	31	8.41	6.73
DBXNY-6565B-VTM	180.0000	75.25	-7.00	2.44	263.00	1.551	31	8.41	6.73
DBXNY-6565B-VTM	180.0000	75.25	7.00	2.44	263.00	1.551	31	8.41	6.73
DBXNY-6565B-VTM	300.0000	75.25	1.17	-7.41	230.00	1.508	31	8.41	6.73
DBXNY-6565B-VTM	300.0000	75.25	-5.83	4.71	230.00	1.508	31	8.41	6.73
DBXNY-6565B-VTM	60.0000	75.25	5.83	4.71	230.00	1.508	31	8.41	6.73
DBXNY-6565B-VTM	60.0000	75.25	-1.17	-7.41	230.00	1.508	31	8.41	6.73
DBXNY-6565B-VTM	180.0000	75.25	-7.00	2.70	230.00	1.508	31	8.41	6.73
DBXNY-6565B-VTM	180.0000	75.25	7.00	2.70	230.00	1.508	31	8.41	6.73
JAMPRO JDH-LV2	240.0000	937.90	-4.62	2.67	198.00	1.461	30	21.70	8.04
JAMPRO JCPB-1H	240.0000	150.00	-7.72	4.46	180.00	1.432	29	2.90	2.90
Andrew MD-S12 Ice	120.0000	763.00	4.23	2.44	254.00	1.540	31	1.33	5.60

Description	Aiming Azimuth °	Weight lb	$Offset_x$ ft	$Offset_z$ ft	z ft	K_z	q_z psf	C_AA_C Front ft^2	C_AA_C Side ft^2
Shield Andrew MD-S12 Ice	240.0000	763.00	-4.23	2.44	254.00	1.540	31	1.33	5.60
Shield Andrew MD-S12 Ice	120.0000	763.00	4.93	2.85	224.00	1.500	30	1.33	5.60
Shield Andrew MD-S12 Ice	240.0000	763.00	-4.93	2.85	224.00	1.500	30	1.33	5.60
Shield Andrew MD-S12 Ice	120.0000	763.00	5.19	3.00	218.00	1.491	30	1.33	5.60
Flash Beacon Lighting	0.0000	50.00	0.00	-2.89	263.00	1.551	31	2.70	2.70
Flash Beacon Lighting	0.0000	50.00	0.00	-4.91	200.00	1.464	30	2.70	2.70
Flash Beacon Lighting	120.0000	50.00	4.25	2.45	200.00	1.464	30	2.70	2.70
Flash Beacon Lighting	240.0000	50.00	-4.25	2.45	200.00	1.464	30	2.70	2.70
	Sum Weight:	9598.90							

Discrete Appurtenance Pressures - With Ice $G_H = 0.850$

Description	Aiming Azimuth °	Weight lb	$Offset_x$ ft	$Offset_z$ ft	z ft	K_z	q_z psf	C_AA_C Front ft^2	C_AA_C Side ft^2	t_z in
PiROD 15' Platform w/handrails (Monopole)	0.0000	10719.27	0.00	0.00	263.00	1.551	5	154.41	154.41	6.1534
PiROD 12' Low Profile Circular Platform	0.0000	4663.33	0.00	0.00	200.00	1.464	5	67.89	67.89	5.9872
DBXNY-6565B-VTM	300.0000	1374.60	1.38	-7.28	263.00	1.551	5	15.66	17.48	6.1534
DBXNY-6565B-VTM	300.0000	1374.60	-5.62	4.84	263.00	1.551	5	15.66	17.48	6.1534
DBXNY-6565B-VTM	60.0000	1374.60	5.62	4.84	263.00	1.551	5	15.66	17.48	6.1534
DBXNY-6565B-VTM	60.0000	1374.60	-1.38	-7.28	263.00	1.551	5	15.66	17.48	6.1534
DBXNY-6565B-VTM	180.0000	1374.60	-7.00	2.44	263.00	1.551	5	15.66	17.48	6.1534
DBXNY-6565B-VTM	180.0000	1374.60	7.00	2.44	263.00	1.551	5	15.66	17.48	6.1534
DBXNY-6565B-VTM	300.0000	1355.14	1.17	-7.41	230.00	1.508	5	15.56	17.33	6.0714
DBXNY-6565B-VTM	300.0000	1355.14	-5.83	4.71	230.00	1.508	5	15.56	17.33	6.0714
DBXNY-6565B-VTM	60.0000	1355.14	5.83	4.71	230.00	1.508	5	15.56	17.33	6.0714
DBXNY-6565B-VTM	60.0000	1355.14	-1.17	-7.41	230.00	1.508	5	15.56	17.33	6.0714
DBXNY-6565B-VTM	180.0000	1355.14	-7.00	2.70	230.00	1.508	5	15.56	17.33	6.0714
DBXNY-6565B-VTM	180.0000	1355.14	7.00	2.70	230.00	1.508	5	15.56	17.33	6.0714
JAMPRO JDH-LV2	240.0000	3135.79	-4.62	2.67	198.00	1.461	5	33.19	26.95	5.9812
JAMPRO JCPB-1H	240.0000	1157.15	-7.72	4.46	180.00	1.432	5	21.86	21.86	5.9244
Andrew MD-S12 Ice Shield	120.0000	5472.37	4.23	2.44	254.00	1.540	5	0.00	0.00	6.1320
Andrew MD-S12 Ice Shield	240.0000	5472.37	-4.23	2.44	254.00	1.540	5	0.00	0.00	6.1320
Andrew MD-S12 Ice Shield	120.0000	5413.55	4.93	2.85	224.00	1.500	5	0.00	0.00	6.0554
Andrew MD-S12 Ice Shield	240.0000	5413.55	-4.93	2.85	224.00	1.500	5	0.00	0.00	6.0554
Andrew MD-S12 Ice Shield	120.0000	5400.94	5.19	3.00	218.00	1.491	5	0.00	0.00	6.0390
Flash Beacon Lighting	0.0000	296.14	0.00	-2.89	263.00	1.551	5	7.62	7.62	6.1534
Flash Beacon Lighting	0.0000	289.49	0.00	-4.91	200.00	1.464	5	7.49	7.49	5.9872
Flash Beacon Lighting	120.0000	289.49	4.25	2.45	200.00	1.464	5	7.49	7.49	5.9872
Flash Beacon Lighting	240.0000	289.49	-4.25	2.45	200.00	1.464	5	7.49	7.49	5.9872
	Sum Weight:	64391.37								

Discrete Appurtenance Pressures - Service $G_H = 0.850$

Description	Aiming Azimuth °	Weight lb	$Offset_x$ ft	$Offset_z$ ft	z ft	K_z	q_z psf	C_AA_C Front ft^2	C_AA_C Side ft^2
PiROD 15' Platform w/handrails (Monopole)	0.0000	2043.00	0.00	0.00	263.00	1.551	12	33.80	33.80
PiROD 12' Low Profile Circular Platform	0.0000	1550.00	0.00	0.00	200.00	1.464	11	15.20	15.20
DBXNY-6565B-VTM	300.0000	75.25	1.38	-7.28	263.00	1.551	12	8.41	6.73
DBXNY-6565B-VTM	300.0000	75.25	-5.62	4.84	263.00	1.551	12	8.41	6.73
DBXNY-6565B-VTM	60.0000	75.25	5.62	4.84	263.00	1.551	12	8.41	6.73
DBXNY-6565B-VTM	60.0000	75.25	-1.38	-7.28	263.00	1.551	12	8.41	6.73
DBXNY-6565B-VTM	180.0000	75.25	-7.00	2.44	263.00	1.551	12	8.41	6.73
DBXNY-6565B-VTM	180.0000	75.25	7.00	2.44	263.00	1.551	12	8.41	6.73
DBXNY-6565B-VTM	300.0000	75.25	1.17	-7.41	230.00	1.508	12	8.41	6.73
DBXNY-6565B-VTM	300.0000	75.25	-5.83	4.71	230.00	1.508	12	8.41	6.73
DBXNY-6565B-VTM	60.0000	75.25	5.83	4.71	230.00	1.508	12	8.41	6.73
DBXNY-6565B-VTM	60.0000	75.25	-1.17	-7.41	230.00	1.508	12	8.41	6.73
DBXNY-6565B-VTM	180.0000	75.25	-7.00	2.70	230.00	1.508	12	8.41	6.73
DBXNY-6565B-VTM	180.0000	75.25	7.00	2.70	230.00	1.508	12	8.41	6.73
JAMPRO JDH-LV2	240.0000	937.90	-4.62	2.67	198.00	1.461	11	21.70	8.04
JAMPRO JCPB-1H	240.0000	150.00	-7.72	4.46	180.00	1.432	11	2.90	2.90
Andrew MD-S12 Ice Shield	120.0000	763.00	4.23	2.44	254.00	1.540	12	1.33	5.60
Andrew MD-S12 Ice Shield	240.0000	763.00	-4.23	2.44	254.00	1.540	12	1.33	5.60
Andrew MD-S12 Ice Shield	120.0000	763.00	4.93	2.85	224.00	1.500	12	1.33	5.60
Andrew MD-S12 Ice Shield	240.0000	763.00	-4.93	2.85	224.00	1.500	12	1.33	5.60
Andrew MD-S12 Ice Shield	120.0000	763.00	5.19	3.00	218.00	1.491	12	1.33	5.60
Flash Beacon Lighting	0.0000	50.00	0.00	-2.89	263.00	1.551	12	2.70	2.70
Flash Beacon Lighting	0.0000	50.00	0.00	-4.91	200.00	1.464	11	2.70	2.70
Flash Beacon Lighting	120.0000	50.00	4.25	2.45	200.00	1.464	11	2.70	2.70
Flash Beacon Lighting	240.0000	50.00	-4.25	2.45	200.00	1.464	11	2.70	2.70
	Sum Weight:	9598.90							

Dish Pressures - No Ice

Elevation ft	Dish Description	Aiming Azimuth °	Weight lb	$Offset_x$ ft	$Offset_z$ ft	K_z	A_A ft^2	q_z psf
248.00	DAX12-59AD	120.0000	924.00	2.50	1.44	1.532	113.10	31
248.00	DAX12-59AD	240.0000	924.00	-2.50	1.44	1.532	113.10	31
218.00	DAX12-59AD	120.0000	924.00	3.46	2.00	1.491	113.10	30
218.00	DAX12-59AD	240.0000	924.00	-3.46	2.00	1.491	113.10	30
210.00	DAX12-59AD	120.0000	924.00	3.81	2.20	1.480	113.10	30
		Sum Weight:	4620.00					

Dish Pressures - With Ice

Elevation ft	Dish Description	Aiming Azimuth °	Weight lb	$Offset_x$ ft	$Offset_z$ ft	K_z	A_A ft^2	q_z psf	t_z in
248.00	DAX12-59AD	120.0000	0.00	2.50	1.44	1.532	128.53	5	4.8939
248.00	DAX12-59AD	240.0000	0.00	-2.50	1.44	1.532	128.53	5	4.8939
218.00	DAX12-59AD	120.0000	0.00	3.46	2.00	1.491	128.33	5	4.8312
218.00	DAX12-59AD	240.0000	0.00	-3.46	2.00	1.491	128.33	5	4.8312
210.00	DAX12-59AD	120.0000	0.00	3.81	2.20	1.480	128.28	5	4.8132
		Sum Weight:	0.00						

Dish Pressures - Service

Elevation ft	Dish Description	Aiming Azimuth °	Weight lb	$Offset_x$ ft	$Offset_z$ ft	K_z	A_A ft^2	q_z psf
248.00	DAX12-59AD	120.0000	924.00	2.50	1.44	1.532	113.10	12
248.00	DAX12-59AD	240.0000	924.00	-2.50	1.44	1.532	113.10	12
218.00	DAX12-59AD	120.0000	924.00	3.46	2.00	1.491	113.10	12
218.00	DAX12-59AD	240.0000	924.00	-3.46	2.00	1.491	113.10	12
210.00	DAX12-59AD	120.0000	924.00	3.81	2.20	1.480	113.10	12
		Sum Weight:	4620.00					

Force Totals

Load Case	Vertical Forces lb	Sum of Forces X lb	Sum of Forces Z lb	Sum of Overturning Moments, M_x lb-ft	Sum of Overturning Moments, M_z lb-ft	Sum of Torques lb-ft
Leg Weight	57468.92					
Bracing Weight	31163.87					
Total Member Self-Weight	88632.79			21785.71	-1991.55	
Total Weight	111130.93			21785.71	-1991.55	
Wind 0 deg - No Ice		-126.41	-74458.58	-11224262.93	25962.06	5577.74
Wind 90 deg - No Ice		72647.36	-146.07	-7850.52	-11119373.85	17717.21
Wind 180 deg - No Ice		-287.94	70661.59	10399681.48	57069.11	-9131.07
Member Ice	381335.53					
Total Weight Ice	891156.93			86445.39	-4621.04	
Wind 0 deg - Ice		-51.21	-59666.48	-8906252.78	6273.01	-23.43
Wind 90 deg - Ice		59545.57	-1.88	86119.26	-9006539.68	3563.87
Wind 180 deg - Ice		-29.51	58926.04	8909839.31	1436.44	-668.81
Total Weight	111130.93			21785.71	-1991.55	
Wind 0 deg - Service		-48.86	-28776.26	-4324513.28	8811.78	2155.65
Wind 90 deg - Service		28076.27	-56.45	10332.09	-4298564.42	6847.23
Wind 180 deg - Service		-111.28	27308.83	4032566.68	20833.83	-3528.92

Load Combinations

Comb. No.	Description
1	Dead Only
2	1.2 Dead+1.6 Wind 0 deg - No Ice
3	0.9 Dead+1.6 Wind 0 deg - No Ice

Comb. No.	Description
4	1.2 Dead+1.6 Wind 90 deg - No Ice
5	0.9 Dead+1.6 Wind 90 deg - No Ice
6	1.2 Dead+1.6 Wind 180 deg - No Ice
7	0.9 Dead+1.6 Wind 180 deg - No Ice
8	1.2 Dead+1.0 Ice+1.0 Temp
9	1.2 Dead+1.0 Wind 0 deg+1.0 Ice+1.0 Temp
10	1.2 Dead+1.0 Wind 90 deg+1.0 Ice+1.0 Temp
11	1.2 Dead+1.0 Wind 180 deg+1.0 Ice+1.0 Temp
12	Dead+Wind 0 deg - Service
13	Dead+Wind 90 deg - Service
14	Dead+Wind 180 deg - Service

Maximum Member Forces

Section No.	Elevation ft	Component Type	Condition	Gov. Load Comb.	Axial lb	Major Axis Moment lb-ft	Minor Axis Moment lb-ft
T1	263 - 240	Leg	Max Tension	7	37910.28	10.54	-391.91
			Max. Compression	10	-49413.84	-346.19	-221.11
			Max. Mx	4	19421.35	1485.15	29.13
			Max. My	2	9141.18	-150.38	-1229.40
			Max. Vy	4	-2099.19	-957.84	-55.98
			Max. Vx	2	1652.64	2.11	879.52
		Diagonal	Max Tension	4	9301.67	0.00	0.00
			Max. Compression	4	-9544.79	0.00	0.00
			Max. Mx	10	3258.74	194.05	1.88
			Max. My	4	-7317.83	-28.32	-35.14
			Max. Vy	10	-160.77	194.05	1.88
			Max. Vx	4	10.38	-28.32	-35.14
		Top Girt	Max Tension	2	543.06	0.00	0.00
			Max. Compression	7	-550.56	0.00	0.00
			Max. Mx	8	65.63	-201.66	0.00
			Max. My	10	63.55	0.00	-0.00
			Max. Vy	8	161.33	0.00	0.00
			Max. Vx	10	0.00	0.00	0.00
T2	240 - 220	Leg	Max Tension	7	92580.40	-924.44	5.22
			Max. Compression	2	-110667.68	159.90	2.56
			Max. Mx	2	-110458.77	1162.09	-1.25
			Max. My	4	-2505.07	-28.40	685.33
			Max. Vy	2	-6879.67	711.49	-30.31
			Max. Vx	2	-2247.96	-315.78	57.43
		Diagonal	Max Tension	4	8360.77	0.00	0.00
			Max. Compression	4	-8495.23	0.00	0.00
			Max. Mx	10	1455.46	206.79	-13.59
			Max. My	4	-7958.21	-39.00	-26.11
			Max. Vy	10	-180.36	206.79	-13.59
			Max. Vx	10	11.02	0.00	0.00
T3	220 - 200	Leg	Max Tension	7	155870.72	-968.04	47.31
			Max. Compression	2	-190209.27	1667.42	10.89
			Max. Mx	3	-126771.80	1743.92	-82.30
			Max. My	4	-117776.05	1580.16	1728.88
			Max. Vy	2	1180.67	1162.08	-1.25
			Max. Vx	6	1640.97	433.66	311.39
		Diagonal	Max Tension	4	13566.97	0.00	0.00
			Max. Compression	4	-13698.04	0.00	0.00
			Max. Mx	10	5523.16	284.15	23.07
			Max. My	4	-13594.47	-53.87	-37.28
			Max. Vy	10	-237.47	284.15	23.07
			Max. Vx	10	13.33	0.00	0.00

Section No.	Elevation ft	Component Type	Condition	Gov. Load Comb.	Axial lb	Major Axis Moment lb-ft	Minor Axis Moment lb-ft
T4	200 - 180	Leg	Max Tension	5	220778.67	-2038.38	-1359.15
			Max. Compression	2	-271246.14	2828.18	-35.12
			Max. Mx	3	-268654.23	2829.93	-36.05
			Max. My	4	-7902.06	-30.34	2917.21
			Max. Vy	4	351.52	-2231.29	-1196.07
			Max. Vx	4	-319.73	-37.70	2381.84
		Diagonal	Max Tension	4	13929.39	0.00	0.00
			Max. Compression	4	-14064.55	0.00	0.00
			Max. Mx	10	2577.74	-325.87	28.06
			Max. My	10	3463.30	-303.00	45.78
			Max. Vy	11	-280.29	-324.27	39.52
			Max. Vx	10	-14.59	0.00	0.00
T5	180 - 160	Leg	Max Tension	5	279711.89	-3513.49	-1799.73
			Max. Compression	2	-344474.26	5084.48	-58.31
			Max. Mx	3	-341026.20	5086.33	-58.89
			Max. My	4	-11281.08	-32.37	4544.82
			Max. Vy	3	-342.71	4100.65	-3.12
			Max. Vx	2	277.74	-2580.90	-4041.59
		Diagonal	Max Tension	4	13896.47	0.00	0.00
			Max. Compression	4	-14051.34	0.00	0.00
			Max. Mx	11	4688.92	-417.18	-49.36
			Max. My	9	918.16	-386.21	55.50
			Max. Vy	11	-321.60	-417.18	-49.36
			Max. Vx	9	15.84	0.00	0.00
T6	160 - 140	Leg	Max Tension	5	331777.57	-3569.52	-2172.59
			Max. Compression	2	-409542.62	5598.97	-76.12
			Max. Mx	2	-409542.62	5598.97	-76.12
			Max. My	4	-14331.15	9.74	4992.59
			Max. Vy	3	-348.86	5591.34	-76.44
			Max. Vx	2	220.45	-2787.25	-4498.95
		Diagonal	Max Tension	4	14867.38	0.00	0.00
			Max. Compression	4	-15131.40	0.00	0.00
			Max. Mx	11	5193.95	-557.73	-67.42
			Max. My	9	713.48	-509.07	73.17
			Max. Vy	11	-362.69	-557.73	67.12
			Max. Vx	9	18.06	0.00	0.00
T7	140 - 120	Leg	Max Tension	7	384523.26	-3362.61	-37.41
			Max. Compression	2	-474863.42	8429.97	-139.30
			Max. Mx	2	-474863.42	8429.97	-139.30
			Max. My	4	-17848.74	46.10	7040.50
			Max. Vy	3	-788.06	8418.44	-139.39
			Max. Vx	4	-674.40	46.10	7040.50
		Diagonal	Max Tension	4	15361.63	0.00	0.00
			Max. Compression	4	-15622.23	0.00	0.00
			Max. Mx	11	5477.80	-743.41	-84.85
			Max. My	9	1148.38	-686.29	93.43
			Max. Vy	11	-441.31	-743.41	-84.85
			Max. Vx	9	-21.08	0.00	0.00
T8	120 - 100	Leg	Max Tension	7	431423.08	-4843.82	-77.04
			Max. Compression	2	-532248.24	8114.67	-5.02
			Max. Mx	2	-499182.08	8429.93	-139.30
			Max. My	4	-19541.35	-313.41	8690.70
			Max. Vy	9	-527.79	855.24	-0.19
			Max. Vx	4	695.64	-313.41	8690.70
		Diagonal	Max Tension	4	17430.30	0.00	0.00
			Max. Compression	4	-17908.12	0.00	0.00
			Max. Mx	11	6467.21	-1006.08	121.40
			Max. My	9	640.54	-902.09	128.17
			Max. Vy	11	-497.29	-1006.08	121.40
			Max. Vx	9	-24.92	0.00	0.00
T9	100 - 80	Leg	Max Tension	7	480512.58	-5025.38	-66.51

Section No.	Elevation ft	Component Type	Condition	Gov. Load Comb.	Axial lb	Major Axis Moment lb-ft	Minor Axis Moment lb-ft
			Max. Compression	2	-592727.58	1447.58	-106.13
			Max. Mx	2	-562747.18	8114.64	-5.02
			Max. My	4	-25245.36	-904.46	14906.70
			Max. Vy	10	661.90	-5458.67	-3769.64
			Max. Vx	4	-780.09	-286.88	9576.87
		Diagonal	Max Tension	4	17625.04	0.00	0.00
			Max. Compression	4	-18187.33	0.00	0.00
			Max. Mx	10	7606.86	-1163.13	-134.44
			Max. My	10	5489.36	-1063.84	142.36
			Max. Vy	10	-533.81	-1163.13	-134.44
			Max. Vx	10	25.77	0.00	0.00
T10	80 - 60	Leg	Max Tension	7	489961.61	-3630.08	-1.94
			Max. Compression	2	-606735.02	7139.67	221.27
			Max. Mx	2	-588796.65	41550.58	142.84
			Max. My	4	-27068.89	-3164.15	21031.84
			Max. Vy	9	11505.42	-39422.54	-48.16
			Max. Vx	4	-3522.27	-3164.15	21031.84
		Diagonal	Max Tension	5	42244.66	-268.37	603.69
			Max. Compression	2	-44356.49	0.00	0.00
			Max. Mx	9	-32106.20	316.68	20.47
			Max. My	5	42244.66	-268.37	603.69
			Max. Vy	11	-210.72	-297.96	165.95
			Max. Vx	2	115.55	-21.73	288.16
		Horizontal	Max Tension	4	16552.08	0.00	0.00
			Max. Compression	5	-17216.82	-158.67	4.30
			Max. Mx	11	-6191.37	-1340.97	-1.40
			Max. My	2	-628.17	-15.69	66.14
			Max. Vy	11	609.71	-1340.97	-1.40
			Max. Vx	9	-19.57	-1141.96	64.44
		Redund Horz 1 Bracing	Max Tension	2	10519.01	0.00	0.00
			Max. Compression	2	-10519.01	0.00	0.00
			Max. Mx	9	1052.25	-91.87	0.00
			Max. My	11	6191.37	0.00	2.32
			Max. Vy	9	116.04	0.00	0.00
			Max. Vx	11	2.93	0.00	0.00
		Redund Horz 2 Bracing	Max Tension	2	10519.01	0.00	0.00
			Max. Compression	2	-10519.01	0.00	0.00
			Max. Mx	9	1052.25	-367.47	0.00
			Max. My	11	6187.93	0.00	9.28
			Max. Vy	9	232.09	0.00	0.00
			Max. Vx	11	-5.86	0.00	0.00
		Redund Diag 1 Bracing	Max Tension	2	12061.63	0.00	0.00
			Max. Compression	2	-12061.63	0.00	0.00
			Max. Mx	10	9392.73	-196.71	0.00
			Max. My	9	1206.56	0.00	-13.15
			Max. Vy	10	108.35	0.00	0.00
			Max. Vx	9	7.24	0.00	0.00
		Redund Diag 2 Bracing	Max Tension	2	7472.85	0.00	0.00
			Max. Compression	2	-7472.85	0.00	0.00
			Max. Mx	10	5819.32	-511.06	0.00
			Max. My	10	1267.78	0.00	19.89
			Max. Vy	10	227.17	0.00	0.00
			Max. Vx	10	-8.84	0.00	0.00
		Redund Hip 1 Bracing	Max Tension	3	155.67	0.00	0.00
			Max. Compression	5	-288.27	0.00	0.00
			Max. Mx	8	-2.87	-63.85	0.00

Section No.	Elevation ft	Component Type	Condition	Gov. Load Comb.	Axial lb	Major Axis Moment lb-ft	Minor Axis Moment lb-ft
			Max. My	10	28.75	0.00	0.00
			Max. Vy	8	80.65	0.00	0.00
			Max. Vx	10	-0.00	0.00	0.00
		Redund Hip 2 Bracing	Max Tension	7	70.36	0.00	0.00
			Max. Compression	4	-120.61	0.00	0.00
			Max. Mx	8	-35.36	-255.40	0.00
			Max. My	10	-14.25	0.00	0.00
			Max. Vy	8	161.30	0.00	0.00
			Max. Vx	10	-0.00	0.00	0.00
		Redund Hip Diagonal Bracing	Max Tension	5	529.95	0.00	0.00
			Max. Compression	9	-414.49	0.00	0.00
			Max. Mx	9	200.77	-644.02	0.00
			Max. My	9	83.80	0.00	0.81
			Max. Vy	9	238.57	0.00	0.00
			Max. Vx	10	0.33	0.00	0.00
		Inner Bracing	Max Tension	3	65.92	0.00	0.00
			Max. Compression	11	-74.32	0.00	0.00
			Max. Mx	8	-33.63	-574.65	0.00
			Max. My	9	13.02	0.00	-1.27
			Max. Vy	8	241.96	0.00	0.00
			Max. Vx	9	0.54	0.00	0.00
T11	60 - 40	Leg	Max Tension	7	534716.65	20993.19	444.78
			Max. Compression	2	-662615.46	7850.08	160.37
			Max. Mx	2	-647003.84	40728.60	133.00
			Max. My	4	-29863.27	-3164.13	21031.86
			Max. Vy	9	11254.55	-37837.76	-35.18
			Max. Vx	4	3441.49	-3164.13	21031.86
		Diagonal	Max Tension	5	41478.23	-241.75	540.31
			Max. Compression	2	-44543.38	0.00	0.00
			Max. Mx	9	-32648.00	312.15	-13.39
			Max. My	5	41478.23	-241.75	540.31
			Max. Vy	11	-218.37	-308.25	145.63
			Max. Vx	2	108.23	-53.96	298.57
		Horizontal	Max Tension	5	16717.14	0.00	0.00
			Max. Compression	4	-18138.46	-244.64	6.21
			Max. Mx	11	6833.91	-1457.25	1.39
			Max. My	2	2672.28	-89.73	84.46
			Max. Vy	11	632.27	-1457.25	-0.81
			Max. Vx	9	-20.86	-1299.53	79.08
		Redund Horz 1 Bracing	Max Tension	2	11487.81	0.00	0.00
			Max. Compression	2	-11487.81	0.00	0.00
			Max. Mx	9	1235.23	-107.02	0.00
			Max. My	11	6836.07	0.00	2.70
			Max. Vy	9	123.79	0.00	0.00
			Max. Vx	11	-3.13	0.00	0.00
		Redund Horz 2 Bracing	Max Tension	2	11487.81	0.00	0.00
			Max. Compression	2	-11487.81	0.00	0.00
			Max. Mx	9	1235.23	-428.09	0.00
			Max. My	11	6833.91	0.00	10.81
			Max. Vy	9	247.57	0.00	0.00
			Max. Vx	11	-6.25	0.00	0.00
		Redund Diag 1 Bracing	Max Tension	2	12261.42	0.00	0.00
			Max. Compression	2	-12261.42	0.00	0.00
			Max. Mx	10	9619.00	-209.96	0.00
			Max. My	9	1318.42	0.00	-12.73
			Max. Vy	10	-113.76	0.00	0.00

Section No.	Elevation ft	Component Type	Condition	Gov. Load Comb.	Axial lb	Major Axis Moment lb-ft	Minor Axis Moment lb-ft
			Max. Vx	9	6.90	0.00	0.00
		Redund Diag 2 Bracing	Max Tension	2	7806.32	0.00	0.00
			Max. Compression	2	-7806.32	0.00	0.00
			Max. Mx	10	6124.01	-558.42	0.00
			Max. My	10	1122.37	0.00	20.46
			Max. Vy	10	237.62	0.00	0.00
			Max. Vx	10	-8.71	0.00	0.00
		Redund Hip 1 Bracing	Max Tension	3	141.80	0.00	0.00
			Max. Compression	5	-259.54	0.00	0.00
			Max. Mx	8	-3.07	-72.01	0.00
			Max. My	10	24.08	0.00	0.00
			Max. Vy	8	83.29	0.00	0.00
			Max. Vx	10	-0.00	0.00	0.00
		Redund Hip 2 Bracing	Max Tension	7	61.97	0.00	0.00
			Max. Compression	4	-107.74	0.00	0.00
			Max. Mx	8	-34.22	-288.03	0.00
			Max. My	10	-16.44	0.00	0.00
			Max. Vy	8	166.57	0.00	0.00
			Max. Vx	10	-0.00	0.00	0.00
		Redund Hip Diagonal Bracing	Max Tension	5	460.82	0.00	0.00
			Max. Compression	9	-382.41	0.00	0.00
			Max. Mx	9	184.78	-703.54	0.00
			Max. My	9	81.74	0.00	0.56
			Max. Vy	9	246.54	0.00	0.00
			Max. Vx	10	0.22	0.00	0.00
		Inner Bracing	Max Tension	3	64.02	0.00	0.00
			Max. Compression	11	-70.96	0.00	0.00
			Max. Mx	8	-33.50	-648.07	0.00
			Max. My	11	-70.96	0.00	1.00
			Max. Vy	8	-249.86	0.00	0.00
			Max. Vx	11	0.39	0.00	0.00
T12	40 - 20	Leg	Max Tension	7	580712.48	18915.94	381.13
			Max. Compression	2	-721250.22	6022.18	129.93
			Max. Mx	2	-707530.57	39108.44	137.22
			Max. My	4	-36818.89	-3668.77	24609.79
			Max. Vy	9	10547.64	-33489.51	-34.27
			Max. Vx	4	-4069.91	-3668.77	24609.79
		Diagonal	Max Tension	5	39993.92	-219.55	483.62
			Max. Compression	2	-43408.97	0.00	0.00
			Max. Mx	9	-30890.09	309.71	-16.98
			Max. My	5	39993.92	-219.55	483.62
			Max. Vy	11	-219.93	-305.29	125.40
			Max. Vx	2	98.53	-77.06	294.66
		Horizontal	Max Tension	5	17793.31	0.00	0.00
			Max. Compression	4	-18968.53	-282.50	6.67
			Max. Mx	11	-7525.29	-1559.62	4.62
			Max. My	2	1589.20	-159.18	79.51
			Max. Vy	11	641.30	-1559.62	4.62
			Max. Vx	9	-20.03	-1434.41	76.11
		Redund Horz 1 Bracing	Max Tension	2	12504.36	0.00	0.00
			Max. Compression	2	-12504.36	0.00	0.00
			Max. Mx	10	9879.77	-117.41	0.00
			Max. My	9	4081.95	0.00	2.97
			Max. Vy	10	125.24	0.00	0.00
			Max. Vx	9	3.16	0.00	0.00
		Redund Horz 2	Max Tension	2	12504.36	0.00	0.00

Section No.	Elevation ft	Component Type	Condition	Gov. Load Comb.	Axial lb	Major Axis Moment lb-ft	Minor Axis Moment lb-ft
		Bracing					
			Max. Compression	2	-12504.36	0.00	0.00
			Max. Mx	9	1462.00	-469.66	0.00
			Max. My	10	9879.77	0.00	11.86
			Max. Vy	9	-250.48	0.00	0.00
			Max. Vx	10	-6.33	0.00	0.00
		Redund Diag 1 Bracing	Max Tension	2	12524.67	0.00	0.00
			Max. Compression	2	-12524.67	0.00	0.00
			Max. Mx	10	9895.82	-222.74	0.00
			Max. My	9	1464.37	0.00	-12.41
			Max. Vy	10	118.60	0.00	0.00
			Max. Vx	9	6.61	0.00	0.00
		Redund Diag 2 Bracing	Max Tension	2	8186.21	0.00	0.00
			Max. Compression	2	-8186.21	0.00	0.00
			Max. Mx	10	6467.97	-606.28	0.00
			Max. My	10	1216.33	0.00	21.13
			Max. Vy	10	246.96	0.00	0.00
			Max. Vx	10	8.61	0.00	0.00
		Redund Hip 1 Bracing	Max Tension	3	127.65	0.00	0.00
			Max. Compression	5	-232.05	0.00	0.00
			Max. Mx	8	-4.64	-77.82	0.00
			Max. My	10	20.49	0.00	0.00
			Max. Vy	8	83.01	0.00	0.00
			Max. Vx	10	-0.00	0.00	0.00
		Redund Hip 2 Bracing	Max Tension	7	56.38	0.00	0.00
			Max. Compression	4	-96.61	0.00	0.00
			Max. Mx	8	-36.19	-311.27	0.00
			Max. My	11	-35.77	0.00	-0.00
			Max. Vy	8	-166.01	0.00	0.00
			Max. Vx	11	-0.00	0.00	0.00
		Redund Hip Diagonal Bracing	Max Tension	5	400.83	0.00	0.00
			Max. Compression	9	-338.48	0.00	0.00
			Max. Mx	9	169.30	-741.86	0.00
			Max. My	9	79.80	0.00	0.36
			Max. Vy	9	246.28	0.00	0.00
			Max. Vx	10	0.14	0.00	0.00
		Inner Bracing	Max Tension	3	57.45	0.00	0.00
			Max. Compression	11	-65.06	0.00	0.00
			Max. Mx	8	-32.90	-700.36	0.00
			Max. My	11	-65.06	0.00	0.69
			Max. Vy	8	-249.02	0.00	0.00
			Max. Vx	11	0.25	0.00	0.00
T13	20 - 0	Leg	Max Tension	7	626089.36	17168.66	351.65
			Max. Compression	2	-780781.48	6189.10	137.41
			Max. Mx	2	-771252.72	42641.02	228.94
			Max. My	4	-40125.74	-3668.74	24609.83
			Max. Vy	2	6470.14	42641.02	228.94
			Max. Vx	4	4097.75	-3668.74	24609.83
		Diagonal	Max Tension	5	39802.89	-238.46	494.61
			Max. Compression	4	-41119.40	0.00	0.00
			Max. Mx	9	-26081.12	332.57	63.13
			Max. My	5	39802.89	-238.46	494.61
			Max. Vy	11	208.25	-294.91	73.21
			Max. Vx	2	99.70	-102.64	292.51
		Horizontal	Max Tension	5	18769.38	0.00	0.00
			Max. Compression	4	-20227.77	-326.50	8.22

Section No.	Elevation ft	Component Type	Condition	Gov. Load Comb.	Axial lb	Major Axis Moment lb-ft	Minor Axis Moment lb-ft
			Max. Mx	11	-8213.88	-1550.27	2.43
			Max. My	2	3190.08	-206.06	87.62
			Max. Vy	11	607.08	-1550.27	2.43
			Max. Vx	9	-18.79	-1426.36	77.22
		Redund Horz 1 Bracing	Max Tension	2	13536.46	0.00	0.00
			Max. Compression	2	-13536.46	0.00	0.00
			Max. Mx	10	4862.48	-121.30	0.00
			Max. My	11	8213.88	0.00	3.06
			Max. Vy	10	120.05	0.00	0.00
			Max. Vx	11	-3.03	0.00	0.00
		Redund Horz 2 Bracing	Max Tension	2	13536.46	0.00	0.00
			Max. Compression	2	-13536.46	0.00	0.00
			Max. Mx	8	4864.01	-485.19	0.00
			Max. My	10	10744.49	0.00	12.26
			Max. Vy	8	240.09	0.00	0.00
			Max. Vx	10	-6.06	0.00	0.00
		Redund Diag 1 Bracing	Max Tension	2	12812.20	0.00	0.00
			Max. Compression	2	-12812.20	0.00	0.00
			Max. Mx	10	10169.61	-218.96	0.00
			Max. My	11	1397.40	0.00	-11.40
			Max. Vy	10	114.48	0.00	0.00
			Max. Vx	11	5.96	0.00	0.00
		Redund Diag 2 Bracing	Max Tension	2	8587.31	0.00	0.00
			Max. Compression	2	-8587.31	0.00	0.00
			Max. Mx	9	7294.48	-609.71	0.00
			Max. My	10	1442.86	0.00	20.41
			Max. Vy	9	-237.80	0.00	0.00
			Max. Vx	10	7.96	0.00	0.00
		Redund Hip 1 Bracing	Max Tension	3	128.25	0.00	0.00
			Max. Compression	5	-235.71	0.00	0.00
			Max. Mx	8	4.77	-75.60	0.00
			Max. My	10	28.76	0.00	0.00
			Max. Vy	8	-74.82	0.00	0.00
			Max. Vx	10	-0.00	0.00	0.00
		Redund Hip 2 Bracing	Max Tension	7	49.34	0.00	0.00
			Max. Compression	4	-81.75	0.00	0.00
			Max. Mx	8	-43.05	-302.39	0.00
			Max. My	11	-48.21	0.00	-0.00
			Max. Vy	8	-149.63	0.00	0.00
			Max. Vx	11	-0.00	0.00	0.00
		Redund Hip Diagonal Bracing	Max Tension	5	368.15	0.00	0.00
			Max. Compression	9	-282.44	0.00	0.00
			Max. Mx	11	171.50	-709.73	0.00
			Max. My	9	67.30	0.00	0.17
			Max. Vy	11	223.56	0.00	0.00
			Max. Vx	11	0.06	0.00	0.00
		Inner Bracing	Max Tension	3	54.66	0.00	0.00
			Max. Compression	11	-59.81	0.00	0.00
			Max. Mx	8	-30.30	-680.37	0.00
			Max. My	11	-59.81	0.00	0.36
			Max. Vy	8	-224.45	0.00	0.00
			Max. Vx	11	0.12	0.00	0.00

Maximum Reactions

Location	Condition	Gov. Load Comb.	Vertical lb	Horizontal, X lb	Horizontal, Z lb
Leg C	Max. Vert	11	506767.59	29390.60	-21248.75
	Max. H_x	11	506767.59	29390.60	-21248.75
	Max. H_z	5	-647403.37	-53014.22	24276.36
	Min. Vert	5	-647403.37	-53014.22	24276.36
	Min. H_x	5	-647403.37	-53014.22	24276.36
	Min. H_z	6	401289.80	26474.88	-23513.22
Leg B	Max. Vert	4	724897.83	-56176.68	-26688.88
	Max. H_x	3	-365033.45	24514.69	24315.53
	Max. H_z	3	-365033.45	24514.69	24315.53
	Min. Vert	3	-365033.45	24514.69	24315.53
	Min. H_x	4	724897.83	-56176.68	-26688.88
	Min. H_z	4	724897.83	-56176.68	-26688.88
Leg A	Max. Vert	2	838474.94	194.47	72729.39
	Max. H_x	2	838474.94	194.47	72729.39
	Max. H_z	2	838474.94	194.47	72729.39
	Min. Vert	7	-672128.43	-316.69	-61830.69
	Min. H_x	5	34565.69	-8550.94	2288.56
	Min. H_z	7	-672128.43	-316.69	-61830.69

Tower Mast Reaction Summary

Load Combination	Vertical lb	$Shear_x$ lb	$Shear_z$ lb	Overturning Moment, M_x lb-ft	Overturning Moment, M_z lb-ft	Torque lb-ft
Dead Only	111130.93	-0.03	-0.22	21794.22	-1992.90	-0.04
1.2 Dead+1.6 Wind 0 deg - No Ice	133357.09	-202.26	-120184.37	-17878736.76	42433.40	8969.96
0.9 Dead+1.6 Wind 0 deg - No Ice	100017.82	-202.26	-120184.80	-17865577.80	42994.81	8957.11
1.2 Dead+1.6 Wind 90 deg - No Ice	133357.09	117128.15	-233.72	-21013.90	-17703714.46	28799.99
0.9 Dead+1.6 Wind 90 deg - No Ice	100017.82	117128.59	-233.73	-27614.84	-17683365.28	28688.53
1.2 Dead+1.6 Wind 180 deg - No Ice	133357.10	-460.70	108498.14	15909439.83	92453.95	-14652.37
0.9 Dead+1.6 Wind 180 deg - No Ice	100017.79	-460.69	108495.58	15884776.60	92942.42	-14640.69
1.2 Dead+1.0 Ice+1.0 Temp	913383.12	-0.14	-1.33	98917.85	-5806.67	3.70
1.2 Dead+1.0 Wind 0 deg+1.0 Ice+1.0 Temp	913383.11	-51.21	-60048.16	-9129394.36	5416.01	49.96
1.2 Dead+1.0 Wind 90 deg+1.0 Ice+1.0 Temp	913383.11	59918.16	-1.90	100006.19	-9246745.15	4352.43
1.2 Dead+1.0 Wind 180 deg+1.0 Ice+1.0 Temp	913383.11	-29.51	58901.36	9109871.72	383.58	-746.13
Dead+Wind 0 deg - Service	111130.93	-48.86	-29030.11	-4299866.58	8820.79	2163.99
Dead+Wind 90 deg - Service	111130.93	28291.89	-56.46	10487.22	-4274635.79	6936.64
Dead+Wind 180 deg - Service	111130.93	-111.28	26207.34	3855747.92	20895.70	-3539.69

Solution Summary

	Sum of Applied Forces			Sum of Reactions			
Load Comb.	PX lb	PY lb	PZ lb	PX lb	PY lb	PZ lb	% Error
1	-0.00	-111130.93	0.00	0.03	111130.93	0.22	0.000%
2	-202.26	-133357.12	-120186.06	202.26	133357.09	120184.37	0.001%
3	-202.26	-100017.84	-120186.06	202.26	100017.82	120184.80	0.001%
4	117129.85	-133357.12	-233.72	-117128.15	133357.09	233.72	0.001%
5	117129.85	-100017.84	-233.72	-117128.59	100017.82	233.73	0.001%
6	-460.70	-133357.12	108499.64	460.70	133357.10	-108498.14	0.001%
7	-460.70	-100017.84	108499.64	460.69	100017.79	-108495.58	0.003%
8	-0.00	-913383.12	0.00	0.14	913383.12	1.33	0.000%
9	-51.21	-913383.12	-60048.92	51.21	913383.11	60048.16	0.000%
10	59918.96	-913383.12	-1.88	-59918.16	913383.11	1.90	0.000%
11	-29.51	-913383.12	58902.18	29.51	913383.11	-58901.36	0.000%
12	-48.86	-111130.93	-29030.45	48.86	111130.93	29030.11	0.000%
13	28292.23	-111130.93	-56.45	-28291.89	111130.93	56.46	0.000%
14	-111.28	-111130.93	26207.64	111.28	111130.93	-26207.34	0.000%

Non-Linear Convergence Results

Load Combination	Converged?	Number of Cycles	Displacement Tolerance	Force Tolerance
1	Yes	6	0.00000001	0.00004644
2	Yes	10	0.00000001	0.00006678
3	Yes	10	0.00000001	0.00004998
4	Yes	10	0.00000001	0.00006567
5	Yes	10	0.00000001	0.00004877
6	Yes	10	0.00000001	0.00006366
7	Yes	9	0.00000001	0.00014550
8	Yes	9	0.00000001	0.00008369
9	Yes	12	0.00000001	0.00005258
10	Yes	12	0.00000001	0.00005432
11	Yes	12	0.00000001	0.00005444
12	Yes	10	0.00000001	0.00005273
13	Yes	10	0.00000001	0.00005304
14	Yes	10	0.00000001	0.00005212

Maximum Tower Deflections - Service Wind

Section No.	Elevation ft	Horz. Deflection in	Gov. Load Comb.	Tilt °	Twist °
T1	263 - 240	6.961	13	0.2860	0.0607
T2	240 - 220	5.594	13	0.2638	0.0551
T3	220 - 200	4.542	13	0.2233	0.0449
T4	200 - 180	3.641	13	0.1925	0.0339
T5	180 - 160	2.868	13	0.1610	0.0245
T6	160 - 140	2.206	13	0.1379	0.0173
T7	140 - 120	1.645	12	0.1135	0.0122
T8	120 - 100	1.182	12	0.0925	0.0088
T9	100 - 80	0.810	12	0.0738	0.0069
T10	80 - 60	0.512	12	0.0565	0.0054
T11	60 - 40	0.297	12	0.0401	0.0036
T12	40 - 20	0.144	12	0.0253	0.0021

Section No.	Elevation ft	Horz. Deflection in	Gov. Load Comb.	Tilt °	Twist °
T13	20 - 0	0.046	12	0.0127	0.0010

Critical Deflections and Radius of Curvature - Service Wind

Elevation ft	Appurtenance	Gov. Load Comb.	Deflection in	Tilt °	Twist °	Radius of Curvature ft
263.00	PiROD 15' Platform w/handrails (Monopole)	13	6.961	0.2860	0.0607	135078
254.00	Andrew MD-S12 Ice Shield	13	6.415	0.2799	0.0590	75043
248.00	DAX12-59AD	13	6.057	0.2745	0.0576	45026
230.00	DBXNY-6565B-VTM	13	5.049	0.2441	0.0504	30894
224.00	Andrew MD-S12 Ice Shield	13	4.740	0.2313	0.0471	30549
218.00	DAX12-59AD	13	4.445	0.2197	0.0437	31043
210.00	DAX12-59AD	13	4.073	0.2070	0.0392	33897
200.00	PiROD 12' Low Profile Circular Platform	13	3.641	0.1925	0.0339	38190
198.00	JAMPRO JDH-LV2	13	3.558	0.1894	0.0328	38827
180.00	JAMPRO JCPB-1H	13	2.868	0.1610	0.0245	43422

Maximum Tower Deflections - Design Wind

Section No.	Elevation ft	Horz. Deflection in	Gov. Load Comb.	Tilt °	Twist °
T1	263 - 240	28.794	4	1.1812	0.2519
T2	240 - 220	23.148	4	1.0895	0.2286
T3	220 - 200	18.800	4	0.9218	0.1862
T4	200 - 180	15.092	2	0.7964	0.1405
T5	180 - 160	11.912	2	0.6664	0.1018
T6	160 - 140	9.178	2	0.5710	0.0718
T7	140 - 120	6.848	2	0.4699	0.0507
T8	120 - 100	4.918	2	0.3833	0.0366
T9	100 - 80	3.366	2	0.3063	0.0286
T10	80 - 60	2.125	2	0.2349	0.0221
T11	60 - 40	1.230	2	0.1668	0.0147
T12	40 - 20	0.595	2	0.1055	0.0088
T13	20 - 0	0.188	3	0.0531	0.0042

Critical Deflections and Radius of Curvature - Design Wind

Elevation ft	Appurtenance	Gov. Load Comb.	Deflection in	Tilt °	Twist °	Radius of Curvature ft
263.00	PiROD 15' Platform w/handrails (Monopole)	4	28.794	1.1812	0.2519	34983
254.00	Andrew MD-S12 Ice Shield	4	26.538	1.1563	0.2451	19435
248.00	DAX12-59AD	4	25.060	1.1338	0.2393	11661
230.00	DBXNY-6565B-VTM	4	20.894	1.0079	0.2093	7485

Elevation ft	Appurtenance	Gov. Load Comb.	Deflection in	Tilt °	Twist °	Radius of Curvature ft
224.00	Andrew MD-S12 Ice Shield	4	19.618	0.9547	0.1956	7415
218.00	DAX12-59AD	4	18.401	0.9069	0.1814	7551
210.00	DAX12-59AD	4	16.866	0.8553	0.1628	8274
200.00	PiROD 12' Low Profile Circular Platform	2	15.092	0.7964	0.1405	9364
198.00	JAMPRO JDH-LV2	2	14.753	0.7837	0.1363	9514
180.00	JAMPRO JCPB-1H	2	11.912	0.6664	0.1018	10489

Bolt Design Data

Section No.	Elevation ft	Component Type	Bolt Grade	Bolt Size in	Number Of Bolts	Maximum Load per Bolt lb	Allowable Load lb	Ratio Load / Allowable	Allowable Ratio	Criteria
T1	263	Leg	A325X	0.7500	4	566.87	29820.60	0.019 ✔	1	Bolt Tension
		Diagonal	A325X	0.6250	2	4650.84	11418.80	0.407 ✔	1	Member Bearing
T2	240	Leg	A325X	0.7500	4	11610.60	29820.60	0.389 ✔	1	Bolt Tension
		Diagonal	A325X	0.6250	2	4180.38	11418.80	0.366 ✔	1	Member Bearing
T3	220	Leg	A325X	1.0000	6	17848.80	53014.40	0.337 ✔	1	Bolt Tension
		Diagonal	A325X	0.6250	2	6849.02	15186.40	0.451 ✔	1	Bolt Shear
T4	200	Leg	A325X	1.2500	6	28718.40	82835.00	0.347 ✔	1	Bolt Tension
		Diagonal	A325X	0.6250	2	6964.69	22837.50	0.305 ✔	1	Member Bearing
T5	180	Leg	A325X	1.2500	6	39338.60	82835.00	0.475 ✔	1	Bolt Tension
		Diagonal	A325X	0.6250	2	6948.23	22837.50	0.304 ✔	1	Member Bearing
T6	160	Leg	A325X	1.2500	8	36964.70	82835.00	0.446 ✔	1	Bolt Tension
		Diagonal	A325X	0.6250	2	7433.69	22837.50	0.326 ✔	1	Gusset Bearing
T7	140	Leg	A325X	1.5000	8	43658.00	119282.00	0.366 ✔	1	Bolt Tension
		Diagonal	A325X	0.6250	2	7680.81	22837.50	0.336 ✔	1	Gusset Bearing
T8	120	Leg	A325X	1.5000	8	50665.40	119282.00	0.425 ✔	1	Bolt Tension
		Diagonal	A325X	0.6250	2	8715.15	22837.50	0.382 ✔	1	Gusset Bearing
T9	100	Leg	A325X	1.5000	8	57125.70	119282.00	0.479 ✔	1	Bolt Tension
		Diagonal	A325X	0.6250	2	8812.52	22837.50	0.386 ✔	1	Gusset Bearing
T10	80	Leg	A325X	1.7500	8	61245.20	162357.00	0.377 ✔	1	Bolt Tension
		Diagonal	A325X	0.6250	3	14785.50	30372.80	0.487 ✔	1	Bolt Shear
		Horizontal	A325X	0.6250	2	8608.41	30372.80	0.283 ✔	1	Bolt Shear
T11	60	Leg	A325X	1.7500	8	66839.60	162357.00	0.412 ✔	1	Bolt Tension
		Diagonal	A325X	0.6250	3	14847.80	30372.80	0.489 ✔	1	Bolt Shear
		Horizontal	A325X	0.6250	2	9069.23	30372.80	0.299 ✔	1	Bolt Shear
T12	40	Leg	A325X	1.7500	8	72589.10	162357.00	0.447 ✔	1	Bolt Tension
		Diagonal	A325X	0.6250	3	14469.70	30372.80	0.476 ✔	1	Bolt Shear
		Horizontal	A325X	0.6250	2	9484.27	30372.80	0.312 ✔	1	Bolt Shear
T13	20	Leg	A325X	1.7500	8	78261.20	162357.00	0.482 ✔	1	Bolt Tension

Section No.	Elevation ft	Component Type	Bolt Grade	Bolt Size in	Number Of Bolts	Maximum Load per Bolt lb	Allowable Load lb	Ratio Load / Allowable	Allowable Ratio	Criteria
		Diagonal	A325X	0.6250	3	13706.50	30372.80	0.451 ✔	1	Bolt Shear
		Horizontal	A325X	0.6250	2	10113.90	30372.80	0.333 ✔	1	Bolt Shear

Compression Checks

Leg Design Data (Compression)

Section No.	Elevation ft	Size	L ft	L_u ft	Kl/r	A in^2	P_u lb	ϕP_n lb	Ratio $P_u / \phi P_n$
T1	263 - 240	P4x.237	23.00	4.58	36.4 K=1.00	3.1741	-49413.80	129620.00	0.381 [1] ✔
T2	240 - 220	P4.5x.438	20.03	4.99	41.4 K=1.00	5.5894	-110668.00	221873.00	0.499 [1] ✔
T3	220 - 200	P6x.562	20.03	5.01	27.9 K=1.00	10.7047	-190209.00	455048.00	0.418 [1] ✔
T4	200 - 180	P8x.5	20.03	5.01	20.9 K=1.00	12.7627	-271246.00	556314.00	0.488 [1] ✔
T5	180 - 160	P10x.593	20.03	5.01	16.7 K=1.00	18.9221	-344474.00	834306.00	0.413 [1] ✔
T6	160 - 140	P10x.593	20.03	6.68	22.3 K=1.00	18.9221	-409543.00	821176.00	0.499 [1] ✔
T7	140 - 120	P10x.718	20.03	6.68	22.5 K=1.00	22.6288	-474863.00	981208.00	0.484 [1] ✔
T8	120 - 100	P12x.687	20.03	10.01	28.1 K=1.00	26.0353	-532248.00	1105740.00	0.481 [1] ✔
T9	100 - 80	P12x.75	20.03	10.01	28.3 K=1.00	28.2743	-592728.00	1200150.00	0.494 [1] ✔
T10	80 - 60	P12x.75	20.03	6.68	18.8 K=1.00	28.2743	-606735.00	1239740.00	0.489 [1] ✔
T11	60 - 40	P12x.843	20.03	6.68	19.0 K=1.00	31.5341	-662615.00	1382140.00	0.479 [1] ✔
T12	40 - 20	P12x1	20.03	6.68	19.2 K=1.00	36.9137	-721250.00	1616880.00	0.446 [1] ✔
T13	20 - 0	P12x1	20.03	6.68	19.2 K=1.00	36.9137	-780782.00	1616880.00	0.483 [1] ✔

[1] $P_u / \phi P_n$ controls

Diagonal Design Data (Compression)

Section No.	Elevation ft	Size	L ft	L_u ft	Kl/r	A in^2	P_u lb	ϕP_n lb	Ratio $\frac{P_u}{\phi P_n}$
T1	263 - 240	L3x3x3/16	6.78	3.14	63.2 K=1.00	1.0900	-9544.79	27854.20	0.343 [1] ✔
T2	240 - 220	L3x3x3/16	8.21	4.01	80.7 K=1.00	1.0900	-8495.23	24498.30	0.347 [1] ✔
T3	220 - 200	L3 1/2x3 1/2x1/4	9.67	4.64	80.3 K=1.00	1.6900	-13547.70	39003.20	0.347 [1] ✔
T4	200 - 180	2L2 1/2x2 1/2x3/16	11.21	5.33	82.1 K=1.00	1.8000	-13831.30	40885.90	0.338 [1] ✔
T5	180 - 160	2L2 1/2x2 1/2x3/16	12.80	6.03	93.0 K=1.00	1.8000	-13827.60	36976.60	0.374 [1] ✔
T6	160 - 140	2L2 1/2x2 1/2x3/16	15.02	7.17	110.6 K=1.00	1.8000	-14972.50	30617.20	0.489 [1] ✔
T7	140 - 120	2L3x3x3/16	16.07	7.71	98.5 K=1.00	2.1800	-15622.20	41658.70	0.375 [1] ✔
T8	120 - 100	2L3x3x1/4	19.56	9.42	121.5 K=1.00	2.8800	-17908.10	42883.70	0.418 [1] ✔
T9	100 - 80	2L3x3x1/4	21.09	10.19	131.5 K=1.00	2.8800	-18187.30	37568.00	0.484 [1] ✔
T10	80 - 60	2L3 1/2x3 1/2x5/16	22.54	7.51	83.5 K=1.00	4.1800	-44356.50	93849.70	0.473 [1] ✔
T11	60 - 40	2L3 1/2x3 1/2x5/16	22.95	7.65	85.0 K=1.00	4.1800	-44543.40	92576.00	0.481 [1] ✔
T12	40 - 20	2L3 1/2x3 1/2x5/16	23.39	7.80	86.6 K=1.00	4.1800	-43409.00	91218.70	0.476 [1] ✔
T13	20 - 0	2L3 1/2x3 1/2x5/16	23.86	7.95	88.4 K=1.00	4.1800	-41119.40	89782.00	0.458 [1] ✔

[1] P_u / ϕP_n controls

Horizontal Design Data (Compression)

Section No.	Elevation ft	Size	L ft	L_u ft	Kl/r	A in^2	P_u lb	ϕP_n lb	Ratio $\frac{P_u}{\phi P_n}$
T10	80 - 60	2L3 1/2x3 1/2x5/16	19.00	8.97	99.7 K=1.00	4.1800	-17216.80	80292.40	0.214 [1] ✔
T11	60 - 40	2L3 1/2x3 1/2x5/16	20.75	9.84	109.4 K=1.00	4.1800	-18138.50	72145.90	0.251 [1] ✔
T12	40 - 20	2L3 1/2x3 1/2x5/16	22.50	10.72	119.1 K=1.00	4.1800	-18968.50	64184.00	0.296 [1] ✔
T13	20 - 0	2L3 1/2x3 1/2x5/16	24.25	11.59	128.8 K=1.00	4.1800	-20227.80	56535.20	0.358 [1] ✔

[1] P_u / ϕP_n controls

Top Girt Design Data (Compression)

Section No.	Elevation ft	Size	L ft	L_u ft	Kl/r	A in^2	P_u lb	ϕP_n lb	Ratio $\frac{P_u}{\phi P_n}$
T1	263 - 240	L1 1/2x1 1/2x1/4	5.00	4.63	190.1 K=1.00	0.6875	-550.56	4299.56	0.128 [1] ✔

[1] P_u / ϕP_n controls

Redundant Horizontal (1) Design Data (Compression)

Section No.	Elevation ft	Size	L ft	L_u ft	Kl/r	A in^2	P_u lb	ϕP_n lb	Ratio $\frac{P_u}{\phi P_n}$
T10	80 - 60	L3 1/2x3 1/2x3/16	3.17	2.64	45.3 K=1.00	1.2773	-10519.00	31428.60	0.335 [1] ✔
T11	60 - 40	L3 1/2x3 1/2x1/4	3.46	2.93	50.6 K=1.00	1.6900	-11487.80	47848.10	0.240 [1] ✔
T12	40 - 20	L3 1/2x3 1/2x1/4	3.75	3.22	55.7 K=1.00	1.6900	-12504.40	46517.00	0.269 [1] ✔
T13	20 - 0	L3 1/2x3 1/2x5/16	4.04	3.51	61.1 K=1.00	2.0900	-13536.50	55651.40	0.243 [1] ✔

[1] P_u / ϕP_n controls

Redundant Horizontal (2) Design Data (Compression)

Section No.	Elevation ft	Size	L ft	L_u ft	Kl/r	A in^2	P_u lb	ϕP_n lb	Ratio $\frac{P_u}{\phi P_n}$
T10	80 - 60	L3 1/2x3 1/2x3/16	6.33	5.80	99.8 K=1.00	1.2773	-10519.00	22248.40	0.473 [1] ✔
T11	60 - 40	L3 1/2x3 1/2x1/4	6.92	6.39	110.4 K=1.00	1.6900	-11487.80	28821.60	0.399 [1] ✔
T12	40 - 20	L3 1/2x3 1/2x1/4	7.50	6.97	120.5 K=1.00	1.6900	-12504.40	25495.80	0.490 [1] ✔
T13	20 - 0	L3 1/2x3 1/2x5/16	8.08	7.55	131.3 K=1.00	2.0900	-13536.50	27308.20	0.496 [1] ✔

[1] P_u / ϕP_n controls

Redundant Diagonal (1) Design Data (Compression)

Section No.	Elevation ft	Size	L ft	L_u ft	Kl/r	A in^2	P_u lb	ϕP_n lb	Ratio $\frac{P_u}{\phi P_n}$
T10	80 - 60	L3 1/2x3 1/2x1/4	7.26	5.92	102.4	1.6900	-12061.60	31525.60	0.383 [1]

Section No.	Elevation ft	Size	L ft	L_u ft	Kl/r	A in^2	P_u lb	ϕP_n lb	Ratio $\frac{P_u}{\phi P_n}$
T11	60 - 40	L3 1/2x3 1/2x1/4	7.38	6.15	K=1.00 106.3	1.6900	-12261.40	30217.00	✔ 0.406 [1]
T12	40 - 20	L3 1/2x3 1/2x5/16	7.51	6.36	K=1.00 110.6	2.0900	-12524.70	35564.30	✔ 0.352 [1]
T13	20 - 0	L3 1/2x3 1/2x3/8	7.65	6.57	K=1.00 114.7	2.4800	-12812.20	40185.60	✔ 0.319 [1]
					K=1.00				✔

[1] P_u / ϕP_n controls

Redundant Diagonal (2) Design Data (Compression)

Section No.	Elevation ft	Size	L ft	L_u ft	Kl/r	A in^2	P_u lb	ϕP_n lb	Ratio $\frac{P_u}{\phi P_n}$
T10	80 - 60	L3 1/2x3 1/2x1/4	9.00	8.21	141.9	1.6900	-7472.85	18956.00	0.394 [1]
T11	60 - 40	L3 1/2x3 1/2x1/4	9.40	8.65	K=1.00 149.5	1.6900	-7806.32	17080.00	✔ 0.457 [1]
T12	40 - 20	L3 1/2x3 1/2x5/16	9.82	9.10	K=1.00 158.2	2.0900	-8186.21	18865.70	✔ 0.434 [1]
T13	20 - 0	L3 1/2x3 1/2x3/8	10.26	9.56	K=1.00 166.9	2.4800	-8587.31	20105.80	✔ 0.427 [1]
					K=1.00				✔

[1] P_u / ϕP_n controls

Redundant Hip (1) Design Data (Compression)

Section No.	Elevation ft	Size	L ft	L_u ft	Kl/r	A in^2	P_u lb	ϕP_n lb	Ratio $\frac{P_u}{\phi P_n}$
T10	80 - 60	L1 1/2x1 1/2x1/8	3.17	3.17	128.3	0.3594	-288.27	4895.09	0.059 [1]
T11	60 - 40	L1 1/2x1 1/2x1/8	3.46	3.46	K=1.00 140.1	0.3594	-259.54	4135.47	✔ 0.063 [1]
T12	40 - 20	L1 1/2x1 1/2x1/8	3.75	3.75	K=1.00 151.9	0.3594	-232.05	3517.19	✔ 0.066 [1]
T13	20 - 0	L1 1/2x1 1/2x1/8	4.04	4.04	K=1.00 163.7	0.3594	-235.71	3027.87	✔ 0.078 [1]
					K=1.00				✔

[1] P_u / ϕP_n controls

Redundant Hip (2) Design Data (Compression)

Section No.	Elevation ft	Size	L ft	L_u ft	Kl/r	A in^2	P_u lb	ϕP_n lb	Ratio $\frac{P_u}{\phi P_n}$
T10	80 - 60	L1 1/2x1 1/2x1/8	6.33	6.33	256.6 K=1.00	0.3594	-120.61	1233.09	0.098 [1] ✔
		KL/R > 250 (C) - 262							
T11	60 - 40	L1 1/2x1 1/2x1/8	6.92	6.92	280.2 K=1.00	0.3594	-107.74	1033.87	0.104 [1] ✔
		KL/R > 250 (C) - 313							
T12	40 - 20	L1 1/2x1 1/2x1/8	7.50	7.50	303.9 K=1.00	0.3594	-96.61	879.30	0.110 [1] ✔
		KL/R > 250 (C) - 364							
T13	20 - 0	L1 1/2x1 1/2x1/8	8.08	8.08	327.5 K=1.00	0.3594	-81.75	756.97	0.108 [1] ✔
		KL/R > 250 (C) - 415							

[1] P_u / ϕP_n controls

Redundant Hip Diagonal Design Data (Compression)

Section No.	Elevation ft	Size	L ft	L_u ft	Kl/r	A in^2	P_u lb	ϕP_n lb	Ratio $\frac{P_u}{\phi P_n}$
T10	80 - 60	L2x2x1/8	10.80	10.80	325.9 K=1.00	0.4844	-290.65	1029.98	0.282 [1] ✔
		KL/R > 250 (C) - 260							
T11	60 - 40	L2x2x1/8	11.41	11.41	344.6 K=1.00	0.4844	-273.08	921.71	0.296 [1] ✔
		KL/R > 250 (C) - 311							
T12	40 - 20	L2x2x1/8	12.05	12.05	363.7 K=1.00	0.4844	-247.45	827.20	0.299 [1] ✔
		KL/R > 250 (C) - 362							
T13	20 - 0	L2x2x1/8	12.70	12.70	383.3 K=1.00	0.4844	-208.55	744.73	0.280 [1] ✔
		KL/R > 250 (C) - 413							

[1] P_u / ϕP_n controls

Inner Bracing Design Data (Compression)

Section No.	Elevation ft	Size	L ft	L_u ft	Kl/r	A in^2	P_u lb	ϕP_n lb	Ratio $\frac{P_u}{\phi P_n}$
T10	80 - 60	L1 1/2x1 1/2x1/8	9.50	9.50	384.9 K=1.00	0.3594	-74.32	548.04	0.136 [1] ✔
		KL/R > 250 (C) - 266							
T11	60 - 40	L1 1/2x1 1/2x1/8	10.38	10.38	420.3 K=1.00	0.3594	-70.96	459.50	0.154 [1] ✔
		KL/R > 250 (C) - 317							
T12	40 - 20	L1 1/2x1 1/2x1/8	11.25	11.25	455.8	0.3594	-65.06	390.80	0.166 [1]

Section No.	Elevation ft	Size	L ft	L_u ft	Kl/r	A in^2	P_u lb	ϕP_n lb	Ratio $\frac{P_u}{\phi P_n}$
T13	20 - 0	KL/R > 250 (C) - 368 L1 1/2x1 1/2x1/8 KL/R > 250 (C) - 419	12.13	12.13	K=1.00 491.2 K=1.00	0.3594	-59.81	336.43	✔ 0.178 [1] ✔

[1] P_u / ϕP_n controls

Tension Checks

Leg Design Data (Tension)

Section No.	Elevation ft	Size	L ft	L_u ft	Kl/r	A in^2	P_u lb	ϕP_n lb	Ratio $\frac{P_u}{\phi P_n}$
T1	263 - 240	P4x.237	23.00	4.58	36.4	3.1741	37910.30	142832.00	0.265 [1] ✔
T2	240 - 220	P4.5x.438	20.03	4.99	41.4	5.5894	92580.40	251522.00	0.368 [1] ✔
T3	220 - 200	P6x.562	20.03	5.01	27.9	10.7047	155871.00	481711.00	0.324 [1] ✔
T4	200 - 180	P8x.5	20.03	5.01	20.9	12.7627	220779.00	574322.00	0.384 [1] ✔
T5	180 - 160	P10x.593	20.03	5.01	16.7	18.9221	279712.00	851496.00	0.328 [1] ✔
T6	160 - 140	P10x.593	20.03	6.68	22.3	18.9221	331778.00	851496.00	0.390 [1] ✔
T7	140 - 120	P10x.718	20.03	6.68	22.5	22.6288	384523.00	1018300.00	0.378 [1] ✔
T8	120 - 100	P12x.687	20.03	10.01	28.1	26.0353	431423.00	1171590.00	0.368 [1] ✔
T9	100 - 80	P12x.75	20.03	10.01	28.3	28.2743	480513.00	1272350.00	0.378 [1] ✔
T10	80 - 60	P12x.75	20.03	6.68	18.8	28.2743	489962.00	1272350.00	0.385 [1] ✔
T11	60 - 40	P12x.843	20.03	6.68	19.0	31.5341	534717.00	1419030.00	0.377 [1] ✔
T12	40 - 20	P12x1	20.03	6.68	19.2	36.9137	580713.00	1661120.00	0.350 [1] ✔
T13	20 - 0	P12x1	20.03	6.68	19.2	36.9137	626089.00	1661120.00	0.377 [1] ✔

[1] P_u / ϕP_n controls

Diagonal Design Data (Tension)

Section No.	Elevation ft	Size	L ft	L_u ft	Kl/r	A in^2	P_u lb	ϕP_n lb	Ratio $\frac{P_u}{\phi P_n}$
T1	263 - 240	L3x3x3/16	6.78	3.14	40.1	0.7120	9301.67	30973.40	0.300 [1] ✔
T2	240 - 220	L3x3x3/16	7.87	3.84	49.1	0.7120	8360.77	30973.40	0.270 [1] ✔
T3	220 - 200	L3 1/2x3 1/2x1/4	9.30	4.46	49.1	1.1269	13567.00	49019.10	0.277 [1] ✔
T4	200 - 180	2L2 1/2x2 1/2x3/16	10.43	4.94	76.2	1.1391	13929.40	49549.20	0.281 [1] ✔
T5	180 - 160	2L2 1/2x2 1/2x3/16	12.40	5.83	89.9	1.1391	13896.50	49549.20	0.280 [1] ✔
T6	160 - 140	2L2 1/2x2 1/2x3/16	13.98	6.66	102.7	1.1391	14867.40	49549.20	0.300 [1] ✔
T7	140 - 120	2L3x3x3/16	16.07	7.71	98.5	1.4241	15361.60	61946.70	0.248 [1] ✔
T8	120 - 100	2L3x3x1/4	19.56	9.42	121.5	1.8787	17430.30	81725.60	0.213 [1] ✔
T9	100 - 80	2L3x3x1/4	21.09	10.19	131.5	1.8787	17625.00	81725.60	0.216 [1] ✔
T10	80 - 60	2L3 1/2x3 1/2x5/16	22.54	7.51	83.5	2.7834	42244.70	121080.00	0.349 [1] ✔
T11	60 - 40	2L3 1/2x3 1/2x5/16	22.95	7.65	85.0	2.7834	41478.20	121080.00	0.343 [1] ✔
T12	40 - 20	2L3 1/2x3 1/2x5/16	23.39	7.80	86.6	2.7834	39993.90	121080.00	0.330 [1] ✔
T13	20 - 0	2L3 1/2x3 1/2x5/16	23.86	7.95	88.4	2.7834	39802.90	121080.00	0.329 [1] ✔

[1] P_u / ϕP_n controls

Horizontal Design Data (Tension)

Section No.	Elevation ft	Size	L ft	L_u ft	Kl/r	A in^2	P_u lb	ϕP_n lb	Ratio $\frac{P_u}{\phi P_n}$
T10	80 - 60	2L3 1/2x3 1/2x5/16	19.00	8.97	99.7	2.7834	16552.10	121080.00	0.137 [1] ✔
T11	60 - 40	2L3 1/2x3 1/2x5/16	20.75	9.84	109.4	2.7834	16717.10	121080.00	0.138 [1] ✔
T12	40 - 20	2L3 1/2x3 1/2x5/16	22.50	10.72	119.1	2.7834	17793.30	121080.00	0.147 [1] ✔
T13	20 - 0	2L3 1/2x3 1/2x5/16	24.25	11.59	128.8	2.7834	18769.40	121080.00	0.155 [1] ✔

[1] P_u / ϕP_n controls

Top Girt Design Data (Tension)

Section No.	Elevation ft	Size	L ft	L_u ft	Kl/r	A in^2	P_u lb	ϕP_n lb	Ratio $\frac{P_u}{\phi P_n}$
T1	263 - 240	L1 1/2x1 1/2x1/4	5.00	4.63	123.6	0.6875	543.06	22275.00	0.024 [1] ✔

[1] P_u / ϕP_n controls

Redundant Horizontal (1) Design Data (Tension)

Section No.	Elevation ft	Size	L ft	L_u ft	Kl/r	A in^2	P_u lb	ϕP_n lb	Ratio $\frac{P_u}{\phi P_n}$
T10	80 - 60	L3 1/2x3 1/2x3/16	3.17	2.64	28.7	1.2773	10519.00	41385.90	0.254 [1] ✔
T11	60 - 40	L3 1/2x3 1/2x1/4	3.46	2.93	32.2	1.6900	11487.80	54756.00	0.210 [1] ✔
T12	40 - 20	L3 1/2x3 1/2x1/4	3.75	3.22	35.4	1.6900	12504.40	54756.00	0.228 [1] ✔
T13	20 - 0	L3 1/2x3 1/2x5/16	4.04	3.51	39.0	2.0900	13536.50	67716.00	0.200 [1] ✔

[1] P_u / ϕP_n controls

Redundant Horizontal (2) Design Data (Tension)

Section No.	Elevation ft	Size	L ft	L_u ft	Kl/r	A in^2	P_u lb	ϕP_n lb	Ratio $\frac{P_u}{\phi P_n}$
T10	80 - 60	L3 1/2x3 1/2x3/16	6.33	5.80	63.3	1.2773	10519.00	41385.90	0.254 [1] ✔
T11	60 - 40	L3 1/2x3 1/2x1/4	6.92	6.39	70.3	1.6900	11487.80	54756.00	0.210 [1] ✔
T12	40 - 20	L3 1/2x3 1/2x1/4	7.50	6.97	76.7	1.6900	12504.40	54756.00	0.228 [1] ✔
T13	20 - 0	L3 1/2x3 1/2x5/16	8.08	7.55	83.9	2.0900	13536.50	67716.00	0.200 [1] ✔

[1] P_u / ϕP_n controls

Redundant Diagonal (1) Design Data (Tension)

Section No.	Elevation ft	Size	L ft	L_u ft	Kl/r	A in^2	P_u lb	ϕP_n lb	Ratio $\frac{P_u}{\phi P_n}$
T10	80 - 60	L3 1/2x3 1/2x1/4	7.26	5.92	65.2	1.6900	12061.60	54756.00	0.220 [1] ✔
T11	60 - 40	L3 1/2x3 1/2x1/4	7.38	6.15	67.7	1.6900	12261.40	54756.00	0.224 [1] ✔
T12	40 - 20	L3 1/2x3 1/2x5/16	7.51	6.36	70.7	2.0900	12524.70	67716.00	0.185 [1] ✔
T13	20 - 0	L3 1/2x3 1/2x3/8	7.65	6.57	73.7	2.4800	12812.20	80352.00	0.159 [1] ✔

[1] P_u / ϕP_n controls

Redundant Diagonal (2) Design Data (Tension)

Section No.	Elevation ft	Size	L ft	L_u ft	Kl/r	A in^2	P_u lb	ϕP_n lb	Ratio $\frac{P_u}{\phi P_n}$
T10	80 - 60	L3 1/2x3 1/2x1/4	9.00	8.21	90.4	1.6900	7472.85	54756.00	0.136 [1] ✔
T11	60 - 40	L3 1/2x3 1/2x1/4	9.40	8.65	95.2	1.6900	7806.32	54756.00	0.143 [1] ✔
T12	40 - 20	L3 1/2x3 1/2x5/16	9.82	9.10	101.1	2.0900	8186.21	67716.00	0.121 [1] ✔
T13	20 - 0	L3 1/2x3 1/2x3/8	10.26	9.56	107.2	2.4800	8587.31	80352.00	0.107 [1] ✔

[1] P_u / ϕP_n controls

Redundant Hip (1) Design Data (Tension)

Section No.	Elevation ft	Size	L ft	L_u ft	Kl/r	A in^2	P_u lb	ϕP_n lb	Ratio $\frac{P_u}{\phi P_n}$
T10	80 - 60	L1 1/2x1 1/2x1/8	3.17	3.17	81.7	0.3594	155.67	11643.80	0.013 [1] ✔
T11	60 - 40	L1 1/2x1 1/2x1/8	3.46	3.46	89.2	0.3594	141.79	11643.80	0.012 [1] ✔
T12	40 - 20	L1 1/2x1 1/2x1/8	3.75	3.75	96.7	0.3594	127.65	11643.80	0.011 [1] ✔
T13	20 - 0	L1 1/2x1 1/2x1/8	4.04	4.04	104.3	0.3594	128.26	11643.80	0.011 [1] ✔

[1] P_u / ϕP_n controls

Redundant Hip (2) Design Data (Tension)

Section No.	Elevation ft	Size	L ft	L_u ft	Kl/r	A in^2	P_u lb	ϕP_n lb	Ratio $\frac{P_u}{\phi P_n}$
T10	80 - 60	L1 1/2x1 1/2x1/8	6.33	6.33	163.4	0.3594	70.36	11643.80	0.006 [1] ✔
T11	60 - 40	L1 1/2x1 1/2x1/8	6.92	6.92	178.4	0.3594	61.97	11643.80	0.005 [1] ✔
T12	40 - 20	L1 1/2x1 1/2x1/8	7.50	7.50	193.5	0.3594	56.38	11643.80	0.005 [1] ✔
T13	20 - 0	L1 1/2x1 1/2x1/8	8.08	8.08	208.5	0.3594	49.34	11643.80	0.004 [1] ✔

[1] P_u / ϕP_n controls

Redundant Hip Diagonal Design Data (Tension)

Section No.	Elevation ft	Size	L ft	L_u ft	Kl/r	A in^2	P_u lb	ϕP_n lb	Ratio $\frac{P_u}{\phi P_n}$
T10	80 - 60	L2x2x1/8	8.75	8.75	167.6	0.4844	529.95	15693.80	0.034 [1] ✔
T11	60 - 40	L2x2x1/8	9.08	9.08	174.0	0.4844	460.82	15693.80	0.029 [1] ✔
T12	40 - 20	L2x2x1/8	9.43	9.43	180.7	0.4844	400.83	15693.80	0.026 [1] ✔
T13	20 - 0	L2x2x1/8	9.79	9.79	187.7	0.4844	368.15	15693.80	0.023 [1] ✔

[1] P_u / ϕP_n controls

Inner Bracing Design Data (Tension)

Section No.	Elevation ft	Size	L ft	L_u ft	Kl/r	A in^2	P_u lb	ϕP_n lb	Ratio $\frac{P_u}{\phi P_n}$
T10	80 - 60	L1 1/2x1 1/2x1/8	9.50	9.50	245.1	0.3594	65.92	16171.90	0.004 [1] ✔
T11	60 - 40	L1 1/2x1 1/2x1/8	10.38	10.38	267.6	0.3594	64.02	16171.90	0.004 [1] ✔
T12	40 - 20	L1 1/2x1 1/2x1/8	11.25	11.25	290.2	0.3594	57.45	16171.90	0.004 [1] ✔
T13	20 - 0	L1 1/2x1 1/2x1/8	12.13	12.13	312.8	0.3594	54.66	16171.90	0.003 [1] ✔

[1] P_u / ϕP_n controls

Section Capacity Table

Section No.	Elevation ft	Component Type	Size	Critical Element	P lb	øP$_{allow}$ lb	% Capacity	Pass Fail
T1	263 - 240	Leg	P4x.237	2	-49413.80	129620.00	38.1	Pass
		Diagonal	L3x3x3/16	8	-9544.79	27854.20	34.3	Pass
		Top Girt	L1 1/2x1 1/2x1/4	4	-550.56	4299.56	12.8	Pass
T2	240 - 220	Leg	P4.5x.438	39	-110668.00	221873.00	49.9	Pass
		Diagonal	L3x3x3/16	41	-8495.23	24498.30	34.7	Pass
T3	220 - 200	Leg	P6x.562	66	-190209.00	455048.00	41.8	Pass
		Diagonal	L3 1/2x3 1/2x1/4	68	-13547.70	39003.20	34.7	Pass
T4	200 - 180	Leg	P8x.5	93	-271246.00	556314.00	48.8	Pass
		Diagonal	2L2 1/2x2 1/2x3/16	95	-13831.30	40885.90	33.8	Pass
T5	180 - 160	Leg	P10x.593	120	-344474.00	834306.00	41.3	Pass
		Diagonal	2L2 1/2x2 1/2x3/16	122	-13827.60	36976.60	37.4	Pass
T6	160 - 140	Leg	P10x.593	147	-409543.00	821176.00	49.9	Pass
		Diagonal	2L2 1/2x2 1/2x3/16	149	-14972.50	30617.20	48.9	Pass
T7	140 - 120	Leg	P10x.718	168	-474863.00	981208.00	48.4	Pass
		Diagonal	2L3x3x3/16	176	-15622.20	41658.70	37.5	Pass
T8	120 - 100	Leg	P12x.687	189	-532248.00	1105740.00	48.1	Pass
		Diagonal	2L3x3x1/4	191	-17908.10	42883.70	41.8	Pass
T9	100 - 80	Leg	P12x.75	204	-592728.00	1200150.00	49.4	Pass
		Diagonal	2L3x3x1/4	206	-18187.30	37568.00	48.4	Pass
T10	80 - 60	Leg	P12x.75	219	-606735.00	1239740.00	48.9	Pass
		Diagonal	2L3 1/2x3 1/2x5/16	237	-44356.50	93849.70	47.3	Pass
		Horizontal	2L3 1/2x3 1/2x5/16	220	-17216.80	80292.40	21.4	Pass
		Redund Horz 1 Bracing	L3 1/2x3 1/2x3/16	238	-10519.00	31428.60	33.5	Pass
		Redund Horz 2 Bracing	L3 1/2x3 1/2x3/16	239	-10519.00	22248.40	47.3	Pass
		Redund Diag 1 Bracing	L3 1/2x3 1/2x1/4	240	-12061.60	31525.60	38.3	Pass
		Redund Diag 2 Bracing	L3 1/2x3 1/2x1/4	251	-7472.85	18956.00	39.4	Pass
		Redund Hip 1 Bracing	L1 1/2x1 1/2x1/8	261	-288.27	4895.09	5.9	Pass
		Redund Hip 2 Bracing	L1 1/2x1 1/2x1/8	262	-120.61	1233.09	9.8	Pass
		Redund Hip Diagonal Bracing	L2x2x1/8	260	-290.65	1029.98	28.2	Pass
		Inner Bracing	L1 1/2x1 1/2x1/8	266	-74.32	548.04	13.6	Pass
T11	60 - 40	Leg	P12x.843	270	-662615.00	1382140.00	47.9	Pass
		Diagonal	2L3 1/2x3 1/2x5/16	288	-44543.40	92576.00	48.1	Pass
		Horizontal	2L3 1/2x3 1/2x5/16	271	-18138.50	72145.90	25.1	Pass
		Redund Horz 1 Bracing	L3 1/2x3 1/2x1/4	289	-11487.80	47848.10	24.0	Pass
		Redund Horz 2 Bracing	L3 1/2x3 1/2x1/4	290	-11487.80	28821.60	39.9	Pass
		Redund Diag 1 Bracing	L3 1/2x3 1/2x1/4	291	-12261.40	30217.00	40.6	Pass
		Redund Diag 2 Bracing	L3 1/2x3 1/2x1/4	302	-7806.32	17080.00	45.7	Pass
		Redund Hip 1 Bracing	L1 1/2x1 1/2x1/8	312	-259.54	4135.47	6.3	Pass
		Redund Hip 2 Bracing	L1 1/2x1 1/2x1/8	313	-107.74	1033.87	10.4	Pass
		Redund Hip Diagonal Bracing	L2x2x1/8	311	-273.08	921.71	29.6	Pass
		Inner Bracing	L1 1/2x1 1/2x1/8	317	-70.96	459.50	15.4	Pass
T12	40 - 20	Leg	P12x1	321	-721250.00	1616880.00	44.6	Pass
		Diagonal	2L3 1/2x3 1/2x5/16	339	-43409.00	91218.70	47.6	Pass

Section No.	Elevation ft	Component Type	Size	Critical Element	P lb	$øP_{allow}$ lb	% Capacity	Pass Fail
		Horizontal	2L3 1/2x3 1/2x5/16	322	-18968.50	64184.00	29.6	Pass
		Redund Horz 1 Bracing	L3 1/2x3 1/2x1/4	340	-12504.40	46517.00	26.9	Pass
		Redund Horz 2 Bracing	L3 1/2x3 1/2x1/4	341	-12504.40	25495.80	49.0	Pass
		Redund Diag 1 Bracing	L3 1/2x3 1/2x5/16	342	-12524.70	35564.30	35.2	Pass
		Redund Diag 2 Bracing	L3 1/2x3 1/2x5/16	343	-8186.21	18865.70	43.4	Pass
		Redund Hip 1 Bracing	L1 1/2x1 1/2x1/8	363	-232.05	3517.19	6.6	Pass
		Redund Hip 2 Bracing	L1 1/2x1 1/2x1/8	364	-96.61	879.30	11.0	Pass
		Redund Hip Diagonal Bracing	L2x2x1/8	362	-247.45	827.20	29.9	Pass
		Inner Bracing	L1 1/2x1 1/2x1/8	368	-65.06	390.80	16.6	Pass
T13	20 - 0	Leg	P12x1	372	-780782.00	1616880.00	48.3	Pass
		Diagonal	2L3 1/2x3 1/2x5/16	379	-41119.40	89782.00	45.8	Pass
		Horizontal	2L3 1/2x3 1/2x5/16	373	-20227.80	56535.20	35.8	Pass
		Redund Horz 1 Bracing	L3 1/2x3 1/2x5/16	391	-13536.50	55651.40	24.3	Pass
		Redund Horz 2 Bracing	L3 1/2x3 1/2x5/16	392	-13536.50	27308.20	49.6	Pass
		Redund Diag 1 Bracing	L3 1/2x3 1/2x3/8	403	-12812.20	40185.60	31.9	Pass
		Redund Diag 2 Bracing	L3 1/2x3 1/2x3/8	394	-8587.31	20105.80	42.7	Pass
		Redund Hip 1 Bracing	L1 1/2x1 1/2x1/8	414	-235.71	3027.87	7.8	Pass
		Redund Hip 2 Bracing	L1 1/2x1 1/2x1/8	415	-81.75	756.97	10.8	Pass
		Redund Hip Diagonal Bracing	L2x2x1/8	413	-208.55	744.73	28.0	Pass
		Inner Bracing	L1 1/2x1 1/2x1/8	419	-59.81	336.43	17.8	Pass
							Summary	
						Leg (T2)	49.9	Pass
						Diagonal (T6)	48.9	Pass
						Horizontal (T13)	35.8	Pass
						Top Girt (T1)	12.8	Pass
						Redund Horz 1 Bracing (T10)	33.5	Pass
						Redund Horz 2 Bracing (T13)	49.6	Pass
						Redund Diag 1 Bracing (T11)	40.6	Pass
						Redund Diag 2 Bracing (T11)	45.7	Pass
						Redund Hip 1 Bracing (T13)	7.8	Pass

Section No.	Elevation ft	Component Type	Size	Critical Element	P lb	$øP_{allow}$ lb	% Capacity	Pass Fail
						Redund Hip 2 Bracing (T12)	11.0	Pass
						Redund Hip Diagonal Bracing (T12)	29.9	Pass
						Inner Bracing (T13)	17.8	Pass
						Bolt Checks	48.9	Pass
						RATING =	**49.9**	**Pass**

WELD CALCULATIONS

Self Supporting Tower Weld Calculations

General Information

Project:	Three Towers Project	Designed By:	FPH	Date:	07/02/10
Task:	Weld Calculations	Checked By:		Date:	
Subject:	Diagonal Connections to Legs				

References: TIA-222-G "Structural Standard for Antenna Supporting Structures and Antennas; AWS D1.1; AISC Steel Manual

Note: Design based on analysis method in "Design of Welded Structures" by Omer Blodgett

Diagonal Connections:	XC Sections	K2 Sections	
t =	0.375 in	0.5 in	
d =	6 in	12 in	(Assumed Min.)
Weld Shape:	Line		
Aw = d =	6 in	12 in	
Sw = d^2 / 6 =	6 in2	24 in2	
Fy Plate Steel =	36 ksi		
Ft Plate Steel =	21.6 ksi		
Fy Leg Steel =	50 ksi		
Fv Leg Steel =	20 ksi		
Fv_1 Leg =	20 k/in		
Fy Weld Steel =	70 ksi		
Fv Weld Steel =	21 ksi		

Fv_{fillet} = 17.9 k/in CONTROLS

Segment	Leg Position	P (kips)	Alpha (deg)	e (in)	Tw (k)	Mw (ft-k)	fw (k/in)	tw (in)	
T1	Tension	9.3	47.44	3.75	12.98	3.99	2.83	0.13	Weld Stress < 50% capacity
	Compression	9.6	47.44						
T2	Tension	8.4	46.02	3.75	10.20	3.42	2.27	0.11	Weld Stress < 50% capacity
	Compression	8.5	53.14						
T3	Tension	13.6	53.47	3.75	13.60	4.66	3.04	0.14	Weld Stress < 50% capacity
	Compression	13.6	59.99						
T4	Tension	14.0	52.08	3.75	14.54	4.95	3.25	0.15	Weld Stress < 50% capacity
	Compression	13.9	58.70						
T5	Tension	13.9	56.56	3.75	12.69	4.38	2.85	0.14	Weld Stress < 50% capacity
	Compression	13.9	62.85						
T6	Tension	14.9	60.12	3.75	12.13	4.21	2.72	0.13	Weld Stress < 50% capacity
	Compression	15.0	66.15						
T7	Tension	15.4	62.99	3.75	11.27	3.95	2.54	0.12	Weld Stress < 50% capacity
	Compression	15.6	68.83						
T8	Tension	17.5	55.39	3.75	17.03	5.77	3.80	0.18	Weld Stress < 50% capacity
	Compression	18.0	61.76						
T9	Tension	17.6	58.01	3.75	15.85	5.39	3.54	0.17	Weld Stress < 50% capacity
	Compression	18.2	64.19						
T10	Tension	42.3	23.13	3.75	38.90	26.03	4.33	0.21	Weld Stress < 50% capacity
	Compression	44.4							
T11	Tension	14.5	27.07	3.75	12.91	17.97	1.82	0.09	Weld Stress < 50% capacity
	Compression	44.6							
T12	Tension	40.0	28.97	3.75	35.00	24.53	3.94	0.19	Weld Stress < 50% capacity
	Compression	43.5							
T13	Tension	39.8	30.76	3.75	34.20	23.56	3.83	0.18	Weld Stress < 50% capacity
	Compression	41.2							

Since all welds required are less than wall thickness, use Full Penetration Groove Welds.

LOADING BACKUP INFORMATION

- PROPOSED EQUIPMENT LOADING AND MOUNTING HEIGHTS
- TELEVISION ANTENNA
- FM RADIO ANTENNA
- CELLULAR COMMUNICATIONS ANTENNA
- MICROWAVE DISH ANTENNA
- COMMUNCIATIONS CABLE
- MICROWAVE DISH CABLE
- MICROWAVE DISH ICE SHIELD

PROPOSED EQUIPMENT LOADING AND MOUNTING HEIGHTS

Prepared by: Power Engineers

Date: June 21, 2010

Conceptual Antenna Tower Loading Plan

3 Communication Towers / Afghanistan Project

Preliminary Draft Data - 6/21/10

Prepared by Rod Gould, POWER Engineers, Inc.

		Device - Attached Loads						
Item	**Height**	**Antenna Type**	**CL**	**Weight**	**Sq.Ft.**	**Leg 1**	**Leg 2**	**Leg 3**
1	264	Cellular Antenna Array	260'	750#	76 SF Total	Array Surrounds Tower		
	262							
	260							
	258							
2	256	Empty Space						
3	254	12' Diameter High Performance Microwave Antenna	248'	1,074# each	78 SF Each	To Remote Site 1	To Remote Site 3	None
	252							
	250							
	248							
	246							
	244							
	242							
4	**240**	Empty Space w/ Ice Shields						
	238							
	236							
5	234	Cellular Antenna Array	230'	750#	76 SF Total	Array Surrounds Tower		
	232							
	230							
	228							
6	226	Empty Space						
7	224	12' Diameter High Performance Microwave Antenna (Space Diversity)	218'	1,074# each	78 SF Each	To Remote Site 1	To Remote Site 3	None
	222							
	220							
	218							
	216							
	214							
	212							
8	**210**	Empty Space						
	208							
	206							
9	204	10.4' H Dual Dipole Flat Panel TV Antenna Antenna (55 to 88 MHz)	198'	880#	WindLoad - 1419 lbs			
	202							
	200							
	198							
	196							
	194							
	192							
10	**190**	Empty Space						
	188							
	186							
	184	[illegible]						

11	182	5 to 10 K FM Antenn	180'	150#	2.9 ft^2			
	180							
	178							
	176							
	174							
	172							
	170							
	168							
	166							
	164							
	162							
	160							
	158							
	156							
	154							
	152							
	150							
	148							
	146							
	144							
	142							
	140							
	138							
	136							
	134							
	132							
	130							
	128							
	126							
	124							
	122							
	120							
	118							
	116							
	114							
	112							
	110							
	108							
	106							
	104							
	102							
	100							
	98							
	96							
	94							
	92							
	90							

	88							
	86							
	84							
	82							
	80							
	78							
	76							
	74							
	72							
	70							
	68							
	66							
	64							
	62							
	60							
	58							
	56							
	54							
	52							
	50							
	48							
	46							
	44							
	42							
	40							
	38							
	36							
	34							
	32							
	30							
	28							
	26							
	24							
	22							
	20							
	18							
	16							
	14							
	12							
	10							
	8							
	6							
	4							
	2							
	0							

TELEVISION ANTENNA

Manufacturer: JAMPRO

Model: JHD-LV2

JHD-LV2

The JAMPRO JHD-LV2 Horizontal Dual Dipole Flat Panel Antenna

The JAMPRO JHD-LV2 antenna is a half wave spaced dual dipole flat panel antenna system. Rugged galvanized steel construction insures many years of dependable performance in even the harshest environments. Protective lightweight radomes can be added to protect against heavy ice buildup. The JHD antenna has been proven to have excellent bandwidth, with typical VSWR of <1.05:1 on carrier, and <1.1:1 across the channel. Many standard and custom directional patterns are available to fit any of your coverage requirements.

Designed For Low Band VHF (Ch 2-6) Band I

Typical Single Ch VSWR <1.05:1 on Carrier

Omni-Directional or Custom Directional Patterns

Rugged Hot Dipped Galvanized Steel Construction

Pressurized Feed System

Fiberglass Radomes Available

Custom Mounting Brackets Available for Easy Installation

P.O. Box 292880, Sacramento, CA 95829-2880 Phone (916) 383-1177 Fax (916) 383-1182

JHD-LV2

JAMPRO JHD LV2 BROADCAST ANTENNA

# Bays	Panels per Bay	Gain (times)	Gain (dBd	Height (ft)	Projected Area (sq. ft.)
1				10.4	Contact Factory
	2	3.2	5.1		
	3	2.2	3.5		
	4	1.6	2		
2				25	Contact Factory
	2	6.6	8.2		
	3	4.5	6.5		
	4	3.3	5.2		
4				50	Contact Factory
	2	13.2	11.2		
	3	8.9	9.5		
	4	7.1	8.5		
6				75	Contact Factory
	2	19.9	13		
	3	13.5	11.3		
	4	10	10		
8		55		100	Contact Factory
	2	26.3	14.2		
	3	17.8	12.5		
	4	13.2	11.2		
12		55		150	Contact Factory
	2	39.8	16		
	3	26.9	14.3		
	4	19.9	13		

Notes:

1. Input N, 7/16 or 7/8 (other type of connectors on request).
2. Connect cables heliax or double shielded, solid insulated coaxial cable.
3. Weights without mounting hardware, feed system or radomes.
4. Frequency range one channel in Band I (54-88 MHz).
5. Null fill and beam tilt on request.
6. Wind loads at 112 mph.

Options

Options available include FCC-Directionalization, Pattern Measurement Service, beam tilt, null fill, and special mounting brackets.

Non-ionizing Radiation

Since many factors contribute to a station's compliance with the FCC exposure guidelines for radio frequency radiation, JAMPRO Antennas, Inc. cannot accept any responsibility in this matter. The station must examine and determine its status based on each individual situation.

All specifications are subject to change.

P.O. Box 292880, Sacramento, CA 95829-2880 Phone (916) 383-1177 Fax (916) 383-1182

FM RADIO ANTENNA

Manufacturer: JAMPRO

Model: JCPB-1H

JAMPRO ANTENNAS INC.
6340 Sky Creek Drive, Sacramento, California 95828
P.O. Box 292880, Sacramento, California 95829-2880
(916)383-1177 FAX (916)383-1182

REF RS-222-F
160 KPH BASIC WIND SPEED
NO ICE and ½" (13mm) ICE

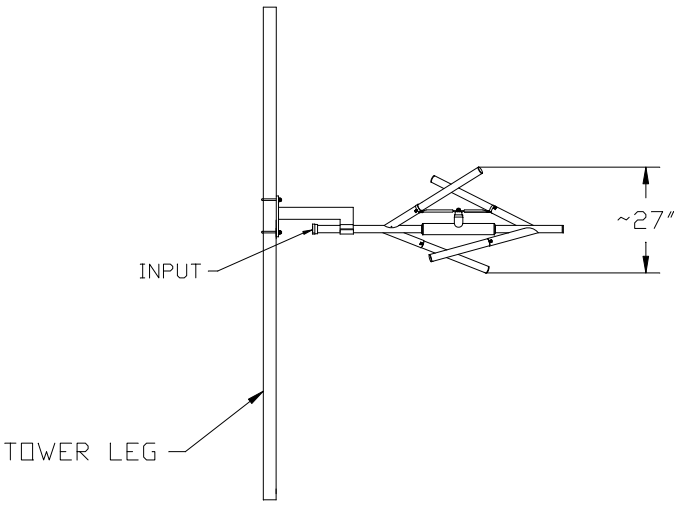

INCLUDES ELEMENTS, CABLES,
FEED SYSTEM.
DOES NOT INCLUDE TOWER.

F (no ice) = 150 lb (70 kg)
F (1/2" ice) = 235 lb (105 kg)

W (no ice) = 45 lb (20 kg)
W (1/2" ice) = 70 lb (30 kg)

CaAa (no ice) = 2.9 square feet
CaAa (1/2" ice) = 4.5 square feet

PRELIMINARY

JCPB-1H

17 May 2010
JCPB-1H.DWG

CELLULAR COMMUNCIATIONS ANTENNA

Manufacturer: Andrew / CommScope

Model: DBXNH-6565B-VTM

Product Specifications

ANDREW®
A CommScope Company

DBXNH-6565B-VTM

DualPol® Dual Band Antenna, 698–896 MHz and 1710–2180 MHz, 65° horizontal beamwidth, RET compatible variable electrical tilt

- Ultra wideband capability for LTE 700 MHz and 850 MHz cellular technology
- Two DualPol® antennas under one radome
- Interleaved dipole technology providing for attractive, low wind load mechanical package
- Each antenna is independently capable of field adjustable electrical tilt
- Exceptional suppression of sidelobes for interference reduction
- The RF connectors are IP67 rated and the radome is IP56 rated

CHARACTERISTICS

General Specifications

Antenna Type	DualPol® dual band
Brand	DualPol® | Teletilt®
Operating Frequency Band	1710 – 2180 MHz | 698 – 896 MHz

Electrical Specifications

Frequency Band, MHz	**698–806**	**806–896**	**1710–1880**	**1850–1990**	**1920–2180**
Beamwidth, Horizontal, degrees	67	65	62	61	64
Beamwidth, Horizontal Tolerance, degrees	±2	±8	±2	±3	±6.5
Gain, dBd	12.9	13.9	17.1	17.0	16.0
Gain, dBi	15.0	16.0	19.2	19.1	18.1
Beamwidth, Vertical, degrees	12.5	10.8	5.5	5.1	4.8
Beam Tilt, degrees	0–10	0–10	0–6	0–6	0–6
Upper Sidelobe Suppression (USLS), typical, dB	15	15	15	15	15
Front-to-Back Ratio at 180°, dB	25	25	32	32	32
Front-to-Back Total Power at 180° ± 20°, dB	20	20	28	28	25
Cross Polarization Ratio (CPR) at Boresight, dB	22	18	25	21	19
Cross Polarization Ratio (CPR) at Sector, dB	10	8	10	10	8
Isolation, dB	30	30	30	30	30
Isolation, Intersystem, dB	35	35	35	35	35
VSWR | Return Loss, db	1.5:1 | 14.0	1.5:1 | 14.0	1.5:1 | 14.0	1.5:1 | 14.0	1.5:1 | 14.0
Intermodulation Products, 3rd Order, 2 x 20 W, dBc	-150	-150	-150	-150	-150
Input Power, maximum, watts	400	400	300	300	300
Polarization	±45°	±45°	±45°	±45°	±45°
Impedance, ohms	50	50	50	50	50
Lightning Protection	dc Ground	dc Ground	dc Ground	dc Ground	dc Ground

©2010 CommScope, Inc. All rights reserved.
All trademarks identified by ® or ™ are registered trademarks or trademarks, respectively, of CommScope.All specifications are subject to change.
See www.commscope.com/andrew for the most current information.

Product Specifications

DBXNH-6565B-VTM

ANDREW® A CommScope Company

Mechanical Specifications

Color	Off white
Connector Interface	7-16 DIN Female
Connector Location	Bottom
Connector Quantity	4
Wind Loading, maximum	525.0 N @ 100 mph 118.0 lbf @ 100 mph
Wind Speed, maximum	241.4 km/h | 150.0 mph

Dimensions

Depth	181.0 mm | 7.1 in
Length	1847.0 mm | 72.7 in
Width	301.0 mm | 11.9 in
Net Weight	21.0 kg | 46.3 lb

Remote Electrical Tilt (RET) Information

Model with Factory Installed AISG 1.1 Actuator	DBXNH-6565B-R2M
Model with Factory Installed AISG 2.0 Actuator	DBXNH-6565B-A2M
RET System	Teletilt®

Regulatory Compliance/Certifications

Agency	Classification
RoHS 2002/95/EC	Compliant by Exemption
China RoHS SJ/T 11364-2006	Above Maximum Concentration Value (MCV)

INCLUDED PRODUCTS

DB380
Pipe Mounting Kit for 2.4 - 4.5 in (60 - 115 mm) OD round members

DB5083
Downtilt Mounting Kit for 2.4 - 4.5 in (60 - 115 mm) OD round members

©2010 CommScope, Inc. All rights reserved.
All trademarks identified by ® or ™ are registered trademarks or trademarks, respectively, of CommScope.All specifications are subject to change.
See www.commscope.com/andrew for the most current information.

Product Specifications

DBXNH-6565B-VTM

Horizontal Pattern

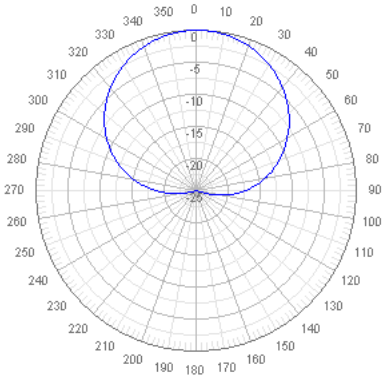

Freq: 725 MHz, Tilt: 0°

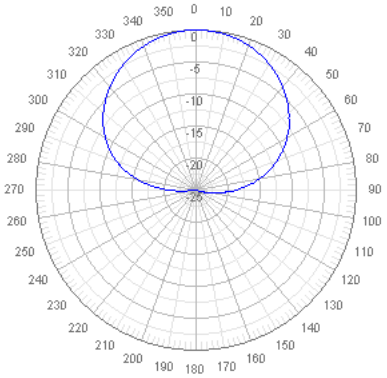

Freq: 850 MHz, Tilt: 0°

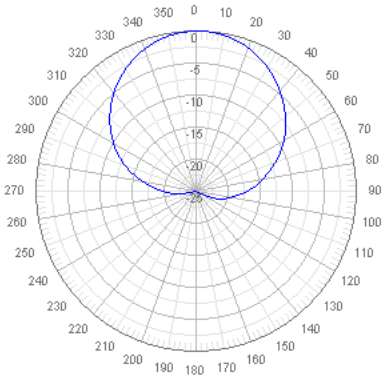

Freq: 1785 MHz, Tilt: 0°

Vertical Pattern

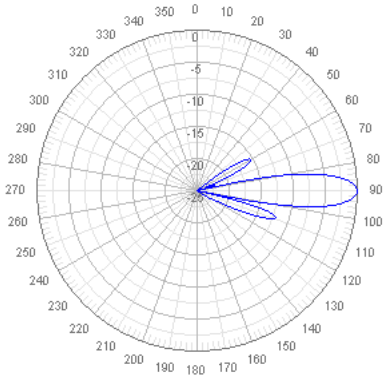

Freq: 725 MHz, Tilt: 0°

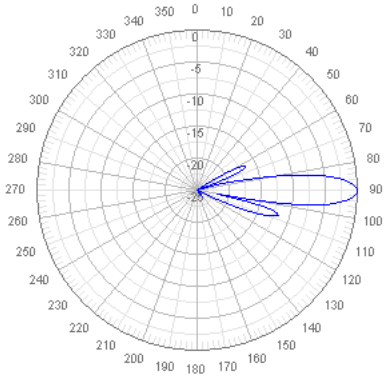

Freq: 850 MHz, Tilt: 0°

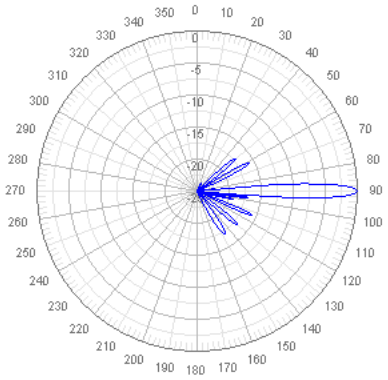

Freq: 1785 MHz, Tilt: 0°

©2010 CommScope, Inc. All rights reserved.
All trademarks identified by ® or ™ are registered trademarks or trademarks, respectively, of CommScope.All specifications are subject to change.
See www.commscope.com/andrew for the most current information.

Product Specifications

DBXNH-6565B-VTM

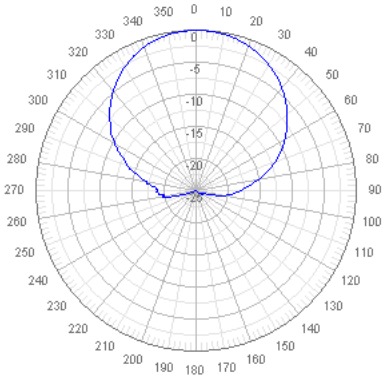

Freq: 1920 MHz, Tilt: 0°

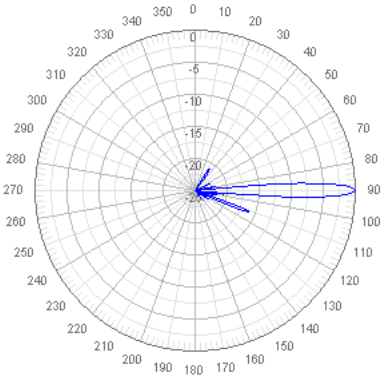

Freq: 1920 MHz, Tilt: 0°

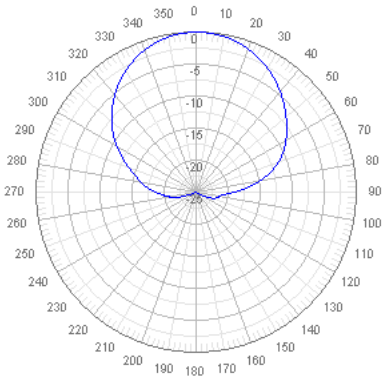

Freq: 2110 MHz, Tilt: 0°

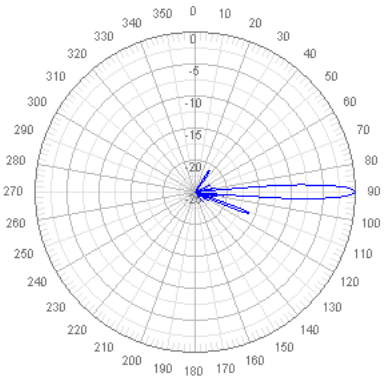

Freq: 2110 MHz, Tilt: 0°

©2010 CommScope, Inc. All rights reserved.
All trademarks identified by ® or ™ are registered trademarks or trademarks, respectively, of CommScope.All specifications are subject to change.
See www.commscope.com/andrew for the most current information.

MICROWAVE DISH ANTENNA

Manufacturer: RFS

Model: DAX12-59AD

Technical Data Sheet **DAX12-59AD**

Microwave Antenna, High Performance, Dual Polarized, 12 ft
5.925 - 6.425 GHz

Product Description

RFS Microwave Antennas are designed for microwave systems in all common frequency ranges from 4 GHz to 15 GHz. Different options of survival windspeeds are available. This allows the use of antennas in areas where extreme wind conditions are normal. The antennas utilise a conventional feed system and are available in three performance classes offering complete flexibility when designing a network.High Performance antennas are ideally suited for systems where a good level of side lobe suppression is required. These antennas are required for use in networks where there is a high interference potential.Antennas are available in 2 ft (0.6m) to 12 ft (3.7m) diameters. The High Performance antennas are available in dual polarised (DAX) as well as in single polarised versions (DA). All antennas include a radome which is specially shaped (2 ft) or flexible (4 to 12 ft) to minimise its impact on the antenna's electrical characteristics.

Antenna

Technical Features

Product Type	Point to point antennas
Frequency, GHz	5.925 - 6.425
Diameter, ft (m)	12 (3.7)
Profile	Standard, 2-part reflector
Performance	High
Polarization	Dual
Regulatory Compliance	Standard, EN 302217, FCC
3dB beamwidth, (degrees)	0.9
Antenna Input	PDR 70
Low Band Gain, dBi	44.6
Mid Band Gain, dBi	44.8
High Band Gain, dBi	45.2
F/B Ratio, dB	71
XPD, dB	30
IPI, dB	35
Max VSWR / R L, dB	1.06 / 30.7
FCC Standard	A
ETSI Standard	Range 1, class 2
Elevation Adjustment, degrees	± 5
Azimuth Adjustment, degrees	± 5
Polarization Adjustment, degrees	± 5
Pressure, bar (psi)	0.3 (4.3)
Radome	Included
Antenna color	White
Mounting Pipe Diameter minimum, mm (in)	114 (4.5)
Mounting Pipe Diameter maximum, mm (in)	114 (4.5)
Approximate Weight, kg (lb)	420 (924)
Survival Windspeed, km/h (mph)	200 (125)
Operational Windspeed, km/h (mph)	190 (118)

All information contained in the present datasheet is subject to confirmation at time of ordering

Technical Data Sheet | **DAX12-59AD (Cont.)**

Microwave Antenna, High Performance, Dual Polarized, 12 ft
5.925 - 6.425 GHz

F_{ST} Side force max. at 110 km/h (68 mph), N (lb)	4150 (930)
F_{AT} Axial force max. at 110 km/h (68 mph), N (lb)	8370 (1875)
M Torque max. at 110 km/h (68 mph), Nm (ft lb)	5040 (3750)
F_{ST} Side force max. at 200 km/h (125 mph), N (lb)	13710 (3071)
F_{AT} Axial force max. at 200 km/h (125 mph), N (lb)	27670 (6200)
M Torque max. at 200 km/h (125 mph), Nm (ft lb)	16650 (12400)

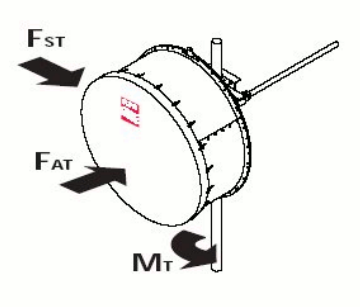

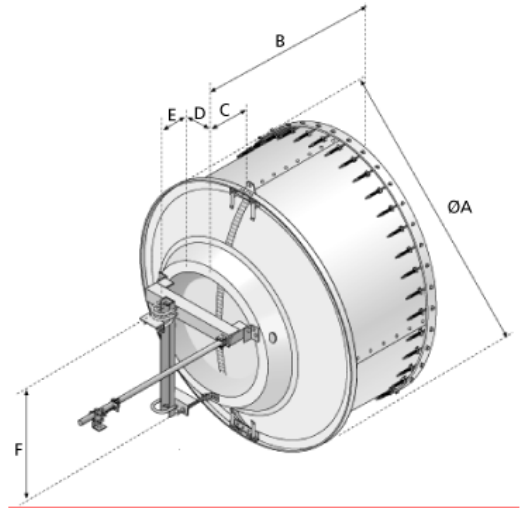

All dimensions in mm (in)

ØA	B	C	ØD for mounting pipe diam. 219 (8.5)	114 (4.5)	89 (3.5)	51 (2.0)	E	F
3800 (150)	1880 ((74.3)	670 (26.5)		190 (7.5)			410 (16.2)	1580 (62.5)

Notes

includes 1 sway bar (3.0 m x Ø60 mm)

Documentation

Complete Antenna installation
NMT192-15.pdf
Split installation
NMT252-07.pdf

Radiation pattern: (NSMA format)
DAX12-59A, 961221.txt
Radiation pattern: (PDF Format)
DAX12-59A, 961221.pdf

All information contained in the present datasheet is subject to confirmation at time of ordering

COMMUNICATIONS CABLE

Manufacturer: Andrew

Model: LDF4-50A HELIAX Coaxial Cables

Product Data Sheet **EP60**

FLEXWELL® Premium Elliptical Waveguide

Product Description

FLEXWELL® elliptical waveguide is constructed of longitudinally continuous seam welded, highly conductive copper tube, corrugated and precision formed into an elliptical cross section. It is manufactured in continuous lengths using a special seam welding process developed by the RFS organization.

The corrugation design achieves high transverse stability, flexibility and crush strength for superior handling and forming at an installation. The inherent strength and flexibility of FLEXWELL waveguide allows on location, a continuous length of waveguide to be run directly from a tower-mounted antenna to the equipment building, eliminating flange joint discontinuities and the use of bends, twists and flex sections associated with a rigid rectangular waveguide system. Because of its flexibility, FLEXWELL elliptical waveguide can be easily transported to an installation site in coils or on reels and then uncoiled as required during installation.

FLEXWELL elliptical waveguide has set an industry standard for excellent electrical performance. Each waveguide has been carefully designed for low loss and low VSWR in specific frequency bands. For optimum system performance, there is no substitute for FLEXWELL waveguide.

As part of the RFS manufacturing process, all elliptical waveguides undergo several different electrical tests. Prior to shipping, every length is 100% tested again for input VSWR, and undergoes a twenty-four hour pressure test. This additional testing is performed to guarantee conformance with published specifications and to avoid any problems in the field.

A FLEXWELL elliptical waveguide feeder requires less planning and reduces installation costs when compared to a feeder system using a rigid rectangular waveguide. FLEXWELL waveguide is available cut to length with factory attached connectors or in continuous lengths for termination in the field.

Features/Benefits

Technical Specifications

Typical Operating Band, GHz	5.6 - 6.425
Performance	Premium
Dimension over Jacket, mm (in)	56 x 33 (2.2 x 1.3)
Weight, kg/m (lb/ft)	1.1 (0.74)
Minimum Bending Radius E Plane, without rebending, mm (in)	200 (8)
Minimum Bending Radius H Plane, without rebending, mm (in)	550 (22)
Minimum Bending Radius E Plane, with rebending, mm (in)	300 (12)
Minimum Bending Radius H Plane, with rebending, mm (in)	800 (31)
Maximum Twist, degree/m (degree/ft)	4 (1.2)
Max. Operating Pressure, bar (psi)	0.5 (7)
Max. Pulling Length per Hoisting Grip, m (ft)	100 (305)
Standard Hanger Spacing, m (ft)	0.9 (3)
Recommended Installation Temperature Range, °C (°F)	-40 to +60 (-40 to +140)
Max. VSWR / Return Loss, dB	1.062 / 30.5
Cut-off Frequency, GHz	3.65

Notes

VSWR values include connectors and are valid for frequency band of connectors.
Max. Operating Band: 4.50 - 6.425 GHz

Other Documentation

All information contained in the present datasheet is subject to confirmation at time of ordering

E60/EP60

ATTENUATION, AVERAGE POWER, GROUP VELOCITY, GROUP DELAY

Frequency GHz	Attenuation dB / 100 m (ft)	Avg. Pow. kW	Group Vel. %c	Group Delay ns/100 m (ft)
5.60	4.15 (1.27)	6.89	75.8	439.8 (134.1)
5.70	4.09 (1.25)	6.99	76.8	434.3 (132.4)
5.80	4.04 (1.23)	7.08	77.7	429.2 (130.8)
5.90	3.99 (1.22)	7.16	78.6	424.6 (129.4)
6.00	3.95 (1.20)	7.24	79.4	420.3 (128.1)
6.10	3.91 (1.19)	7.31	80.1	416.3 (126.9)
6.20	3.88 (1.18)	7.38	80.8	412.7 (125.8)
6.30	3.84 (1.17)	7.44	81.5	409.2 (124.7)
6.40	3.81 (1.16)	7.50	82.1	406.1 (123.8)
6.425	3.80 (1.16)	7.52	82.3	405.3 (123.5)

For attenuation: VSWR 1.0, ambient temperature 20° C (68° F).

For average power: VSWR 1.0 and 42° C (76° F) temperature rise over 40° C (104° F) ambient.

Attenuation, Average Power, Group Velocity, Group Delay

All information contained in the present datasheet is subject to confirmation at time of ordering

MICROWAVE DISH CABLE

Manufacturer: RFS

Model: EP60 FLEXWELL Premium Elliptical Waveguide

1/2" Foam Dielectric, LDF Series – *50-ohm*

LDF4-50A

Description	Type No.
Cable Ordering Information	
Standard Cable	
1/2" Standard Cable, Standard Jacket	**LDF4-50A**
Fire Retardant Cables	
1/2" Fire Retardant Jacket (CATVX)	**LDF4RN-50A**
1/2" Fire Retardant Jacket (CATVR)	**LDF4RN-50A**
Low VSWR and Specialized Cables	
1/2" Low VSWR, specify operating band	**LDF4P-50A-(**)**
Phase Stabilized and Phase Measured Cable	See page 590
Jumper Cable Assemblies – See page 584	

** Insert suffix number from "Low VSWR Specifications" table, page 498

Characteristics

Electrical	
Impedance, ohms	50 ± 1
Maximum Frequency, GHz	8.8
Velocity, percent	88
Peak Power Rating, kW	40
dc Resistance, ohms/1000 ft (1000 m)	
Inner	0.45 (1.48)
Outer	0.58 (1.90)
dc Breakdown, volts	4000
Jacket Spark, volts RMS	8000
Capacitance, pF/ft (m)	23.1 (75.8)
Inductance, µH/ft (m)	0.058 (0.19)
Mechanical	
Outer Conductor	Copper
Inner Conductor	Copper-Clad Aluminum
Diameter over Jacket, in (mm)	0.63 (16)
Diameter over Copper Outer Conductor, in (mm)	0.55 (14)
Diameter Inner Conductor, in (mm)	0.189 (4.6)
Nominal Inside Transverse Dimensions, cm	1.11
Minimum Bending Radius, in (mm)	5 (125)
Number of Bends, minimum (typical)	15 (50)
Bending Moment, lb-ft (N•m)	2.8 (3.8)
Cable Weight, lb/ft (kg/m)	0.15 (0.22)
Tensile Strength, lb (kg)	250 (113)
Flat Plate Crush Strength, lb/in (kg/mm)	110 (2.0)

Attenuation and Average Power Ratings

Frequency MHz	Attenuation dB/100 ft	Attenuation dB/100 m	Average Power, kW
0.5	0.045	0.149	40.0
1	0.064	0.211	35.8
1.5	0.079	0.259	29.2
2	0.091	0.299	25.3
10	0.205	0.672	11.3
20	0.291	0.954	7.93
30	0.357	1.17	6.46
50	0.463	1.52	4.98
88	0.619	2.03	3.73
100	0.661	2.17	3.49
108	0.688	2.26	3.36
150	0.815	2.67	2.83
174	0.880	2.89	2.62
200	0.946	3.10	2.44
300	1.17	3.83	1.97
400	1.36	4.46	1.70
450	1.45	4.75	1.59
500	1.53	5.02	1.51
512	1.55	5.08	1.49
600	1.69	5.53	1.37
700	1.83	6.01	1.26
800	1.97	6.46	1.17
824	2.00	6.56	1.15
894	2.09	6.85	1.10
960	2.17	7.12	1.06
1000	2.22	7.28	1.04
1250	2.51	8.23	0.921
1500	2.77	9.09	0.833
1700	2.97	9.74	0.777
1800	3.07	10.1	0.753
2000	3.25	10.7	0.710
2100	3.34	11.0	0.691
2200	3.43	11.2	0.673
2300	3.52	11.5	0.657
3000	4.09	13.4	0.565
3400	4.39	14.4	0.526
4000	4.82	15.8	0.479
5000	5.49	18.0	0.421
6000	6.11	20.1	0.378
8000	7.26	23.8	0.318
8800	7.69	25.2	0.300

Standard Conditions:
For attenuation. VSWR 1.0, ambient temperature 20°C (68°F).
For Average Power, VSWR 1.0, ambient temperature 40°C (104°F), inner conductor temperature 100°C (212°F), no solar loading.

N Male
L4PNM-RC

N Female
L4PNF-RC

7-16 DIN Male
L4PDM-RC

7-16 DIN Female
L4PDF-RC

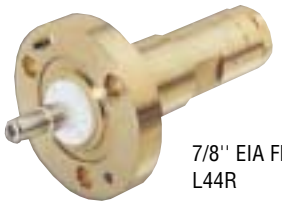

7/8'' EIA Flange
L44R

UHF Male
L44P

Connectors

Interface	Description	Type Number	Inner Contact Attachment	Outer Contact Attachment	Plating Code	Max. Length in (mm)	Max. Dia. in (mm)
N Male	Hex Head	**L4PNM-H**	Solder	Self-Flare	SG	2.6 (66)	0.95 (24.1)
N Male	RingFlare	**L4PNM-RC**	Captivated	RingFlare	SG	3.0 (75.7)	0.86 (21.8)
N Male	Right Angle, Hex	**L4PNR-H**	Solder	Self-Flare	SG	3.2/1.5 (81/38)	0.95 (24.1)
N Male	Right Angle, Hex	**L4PNR-HC**	Captivated	Self-Flare	SG	3.2/1.5 (81/38)	0.91 (23.1)
N Female	–	**L4PNF**	Solder	Self-Flare	SG	2.6 (66)	0.94 (23.9)
N Female	Bulk Head	**L4PNF-BH**	Solder	Self-Flare	SG	2.6 (66)	0.96 (24.4)
N Female	Panel Mount	**L4PNF-PM**	Solder	Self-Flare	SG	2.6 (66)	1.0 (25.4)
N Female	RingFlare	**L4PNF-RC**	Captivated	RingFlare	SG	2.8 (71)	0.86 (21.8)
7-16 DIN Male	–	**L4PDM**	Solder	Self-Flare	SS	2.6 (66)	1.4 (35.6)
7-16 DIN Male	Right Angle	**L4PDR**	Solder	Self-Flare	SS	1.8/2.8 (46/72)	1.41 (35.9)
7-16 DIN Male	Right Angle	**L4PDR-C**	Captivated	Self-Flare	SS	1.8/2.8 (46/72)	1.41 (35.9)
7-16 DIN Male	RingFlare	**L4PDM-RC**	Captivated	Ring-Flare	SS	2.64 (67.1)	0.86 (21.8)
7-16 DIN Female	–	**L4PDF**	Solder	Self-Flare	SS	2.7 (69)	1.1 (27.9)
7-16 DIN Female	Bulk Head	**L4PDF-BH**	Solder	Self-Flare	SS	2.73 (69.4)	1.62 (41.1)
7-16 DIN Female	Bulk Head	**L4PDF-BHC**	Captivated	Self-Flare	SS	2.9 (74)	1.63 (41.4)
7-16 DIN Female	Panel Mount	**L4PDF-PM**	Solder	Self-Flare	SS	2.7 (69)	1.2 (29.4)
7-16 DIN Female	RingFlare	**L4PDF-RC**	Captivated	RingFlare	SS	2.8 (71)	0.86 (21.8)
7/8" EIA Flange	–	**L44R**	Solder	Self-Flare	BB	3.2 (81)	2.25 (57.2)
7/8" EIA Flange	Right Angle	**124990-1**	Solder	Self-Flare	BB	2.3/1.6 (58/41)	2.25 (57.2)
F Flange Male	–	**L44F**	Solder	Self-Flare	BB	2.3 (58)	2.25 (57.2)
F Flange Female	–	**209865**	Solder	Self-Flare	BS	2.3 (58)	2.25 (57.2)
UHF Male	–	**L44P**	Solder	Self-Flare	BB	2.3 (58)	0.91 (23.1)
UHF Female	–	**L44U**	Solder	Self-Flare	BS	2.3 (58)	0.91 (23.1)
HN Male	–	**L44J**	Solder	Self-Flare	BB	2.5 (64)	0.91 (23.1)
LC Male	–	**L44M**	Solder	Self-Flare	BB	3.6 (91)	0.91 (23.1)
TNC Female	–	**L44NT**	Solder	Self-Flare	BB	2.8 (71)	0.94 (23.9)
End Terminal	–	**L44T**	Solder	Self-Flare	BB	4.0 (102)	0.91 (23.1)
Splice	–	**L44Z**	Solder	Self-Flare	BB	3.2 (81)	1.1 (27.9)

Plating Codes: BB - Brass Body and Pin, BS - Brass Body and Silver Plated Pin, SG - Silver Plated Body and Gold Plated Pin, SS - Silver Plated Body and Pin

Connector Accessories – See page 624

Factory Attached Connectors – For factory made cable assemblies and jumper cables, see pages 584-587.

MICROWAVE DISH ICE SHIELD

Manufacturer: Andrew

Model: MD-S12 Microwave Dish Shield

ITEM NO.	PART NUMBER	DESCRIPTION	QTY.	WEIGHT
1	MDS.XX	PANELS (SEE TABLE)	-	-
2	MT-XXX	GALV. PIPE (SEE TABLE)	1	-
3	MDSH	HARDWARE KIT (ITEM#4-15)	1	
4	MDS.16	MOUNT PLATE	2	12.50 LBS
5	MDS.15	CENTER PLATE	1	1.59 LBS
6	MDS.17	SHACKLE PLATE	2	1.33 LBS
7	MT216NSH	MT-216 HARDWARE KIT	1	19.58 LBS
8	GUB-4356	1/2" X 3-5/8" X 6" GALV U-BOLT KIT	4	0.83 LBS
9	GB-04125	1/2" X 1-1/4" GALV BOLT KIT	32	0.12 LBS
10	MT-309	EYE NUT 3/8" WITH 1/2" THREAD	2	0.26 LBS
11	MT-345	3/8 SHACKLE	12	0.33 LBS
12	MT-296	EHS GUY CABLE 1/4" (PER FOOT)	200	0.15 LBS
13	MT-301	5/16" THIMBLE	14	0.09 LBS
14	MT32414	1/4" CABLE CLIP	28	0.06 LBS
15	MT-318	3/8" X 6" LONG JAW/EYE TURNBUCKLE	7	0.89 LBS

			PANELS				
PART #	WEIGHT	GALV PIPE	MDS.01 (A)	MDS.02 (B)	MDS.03 (C)	MDS.04 (D)	MDS.05 (E)
MD-S4	290 LBS	MT54775	-	2	-	-	-
MD-S6	443 LBS	MT547100	-	-	4	-	-
MD-S8	571 LBS	MT547126	2	-	4	-	-
MD-S10	649 LBS	MT547140	-	-	3	3	-
MD-S12	763 LBS	MF130	-	-	-	2	4

REVISIONS				
REV.	ZONE	DESCRIPTION	BY	DATE
A				4/13/2006

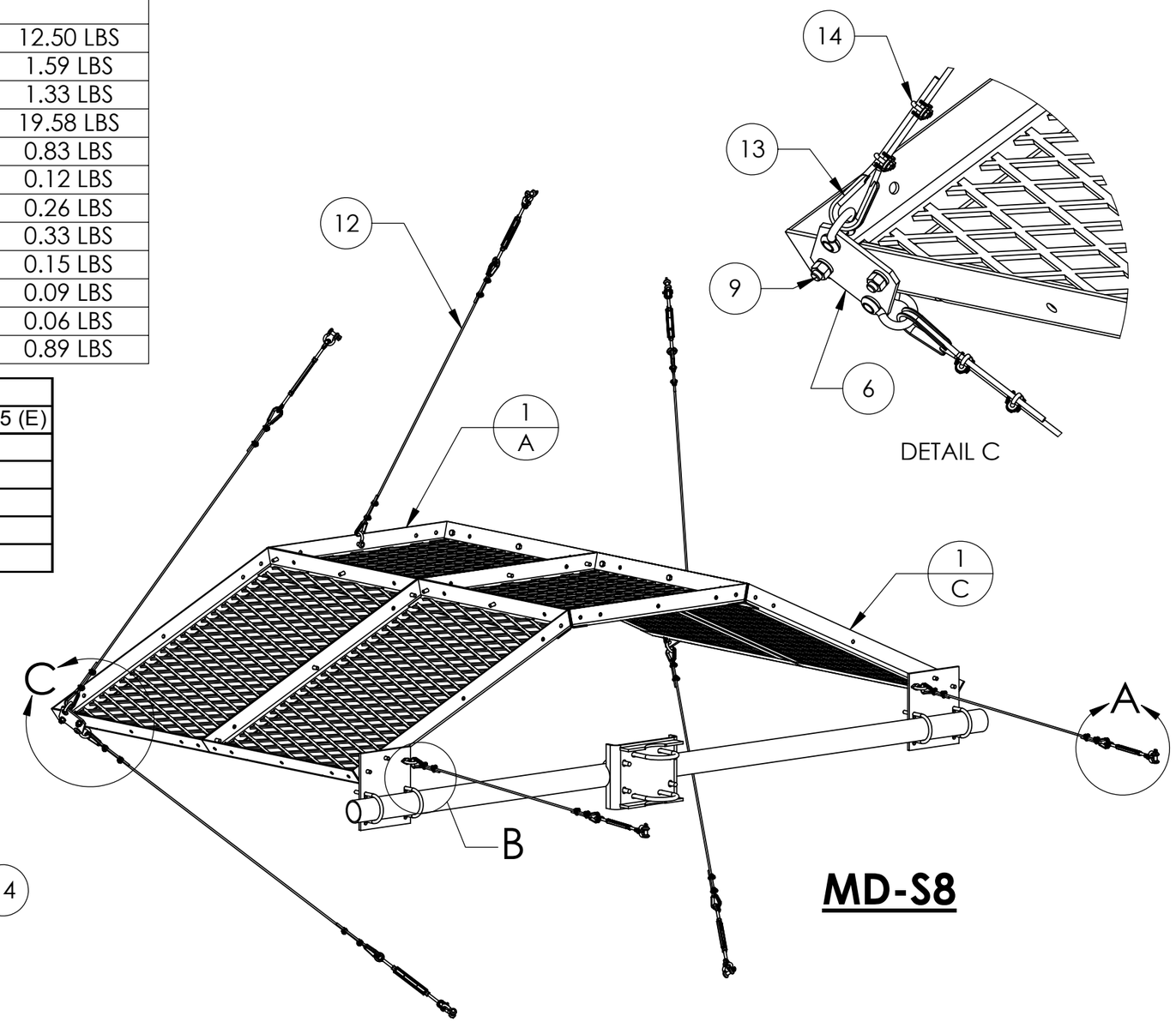

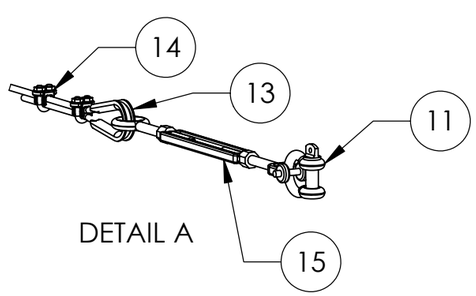

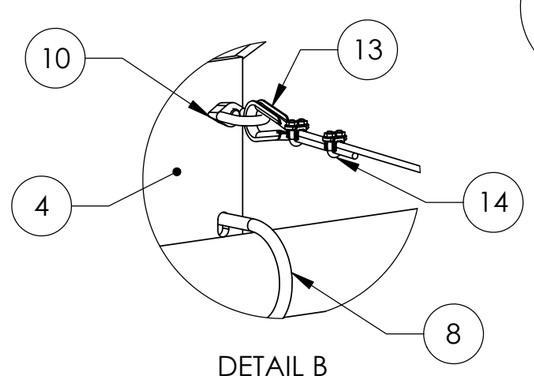

NOTES:

1. 3 BOLTS AT EACH PANEL CONNECTION
2. MINIMUM 15 FT. LBS OF TORQUE ON CABLE CLIPS
3. MUST HAVE ALL 7 GUY CABLE LOCATIONS.

These drawings and specifications are the proprietary property of ANDREW CORPORATION and may be used only for the specific purpose authorized in writing by Andrew Corporation.

ALL DIMENSIONS ARE IN INCHES U.O.S.
TOLERANCES UNLESS OTHERWISE SPECIFIED:

.X = ± .06 ANGLES ± 2°
.XX = ± .03 FRACTIONS ± 1/32
.XXX= ± .010

REMOVE BURRS AND BREAK EDGES .005

DO NOT SCALE THIS PRINT

DRAWN BY: AW	SHEET: 1 of 3	PART NUMBER: MD-S
CHECKED BY: TP	SCALE: NTS	DESCRIPTION: MICROWAVE DISH SHIELD
DATE: 04/13/06	MATERIAL: A36	DRAWING TYPE: ASSEMBLY DRAWING
REVISION: A	FINISH: GALV A123	ANDREW® ORLAND PARK, IL. 60462 U.S.A.
	WEIGHT: SEE TABLE	

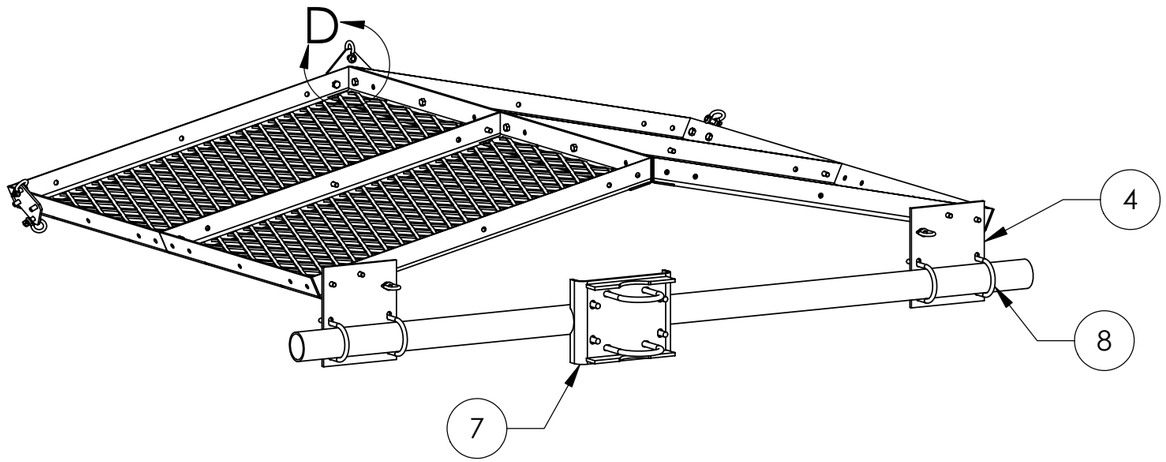

MD-S6

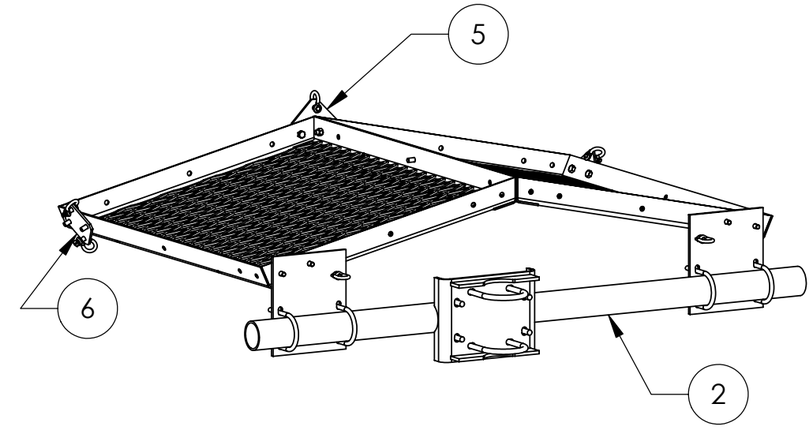

MD-S4

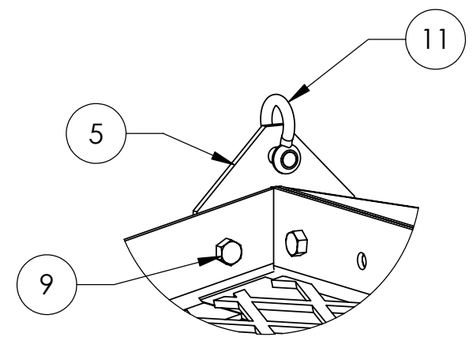

DETAIL D

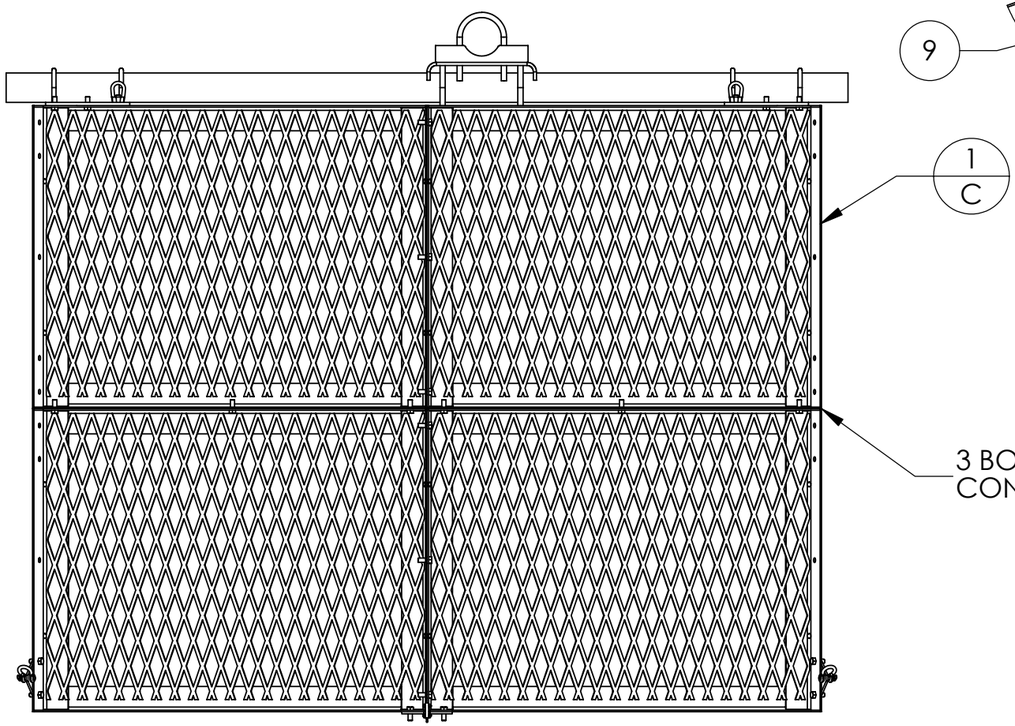

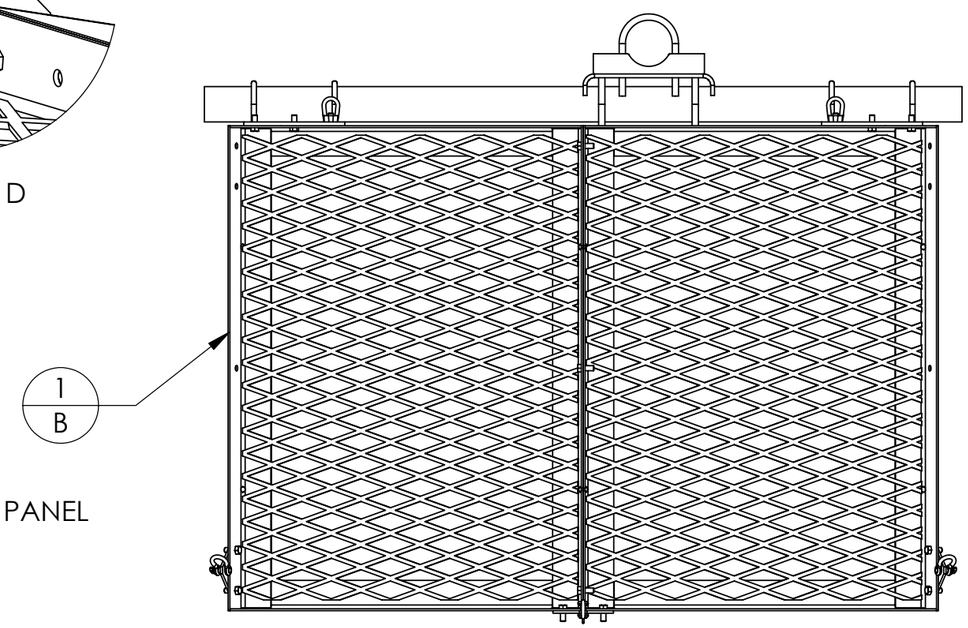

These drawings and specifications are the proprietary property of ANDREW CORPORATION and may be used only for the specific purpose authorized in writing by Andrew Corporation.

ALL DIMENSIONS ARE IN INCHES U.O.S.
TOLERANCES UNLESS OTHERWISE SPECIFIED:

.X = ± .06 ANGLES ± 2°
.XX = ± .03 FRACTIONS ± 1/32
.XXX= ± .010

REMOVE BURRS AND BREAK EDGES .005

DO NOT SCALE THIS PRINT

DRAWN BY: AW	SHEET: 2 of 3	PART NUMBER: MD-S
CHECKED BY: TP	SCALE: NTS	DESCRIPTION: MICROWAVE DISH SHIELD
DATE: 04/13/06	MATERIAL: A36	DRAWING TYPE: ASSEMBLY DRAWING
REVISION: A	FINISH: GALV A123	ANDREW® ORLAND PARK, IL. 60462 U.S.A.
	WEIGHT: SEE TABLE	

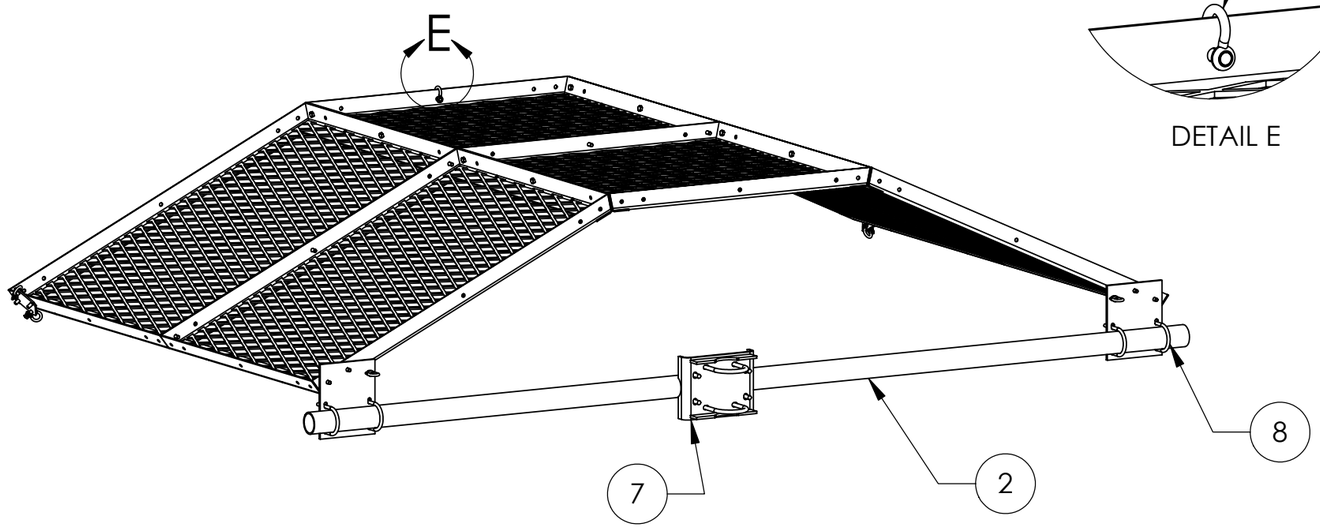

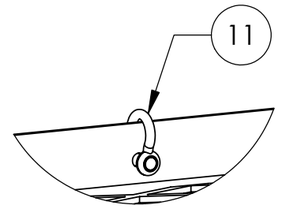

DETAIL E

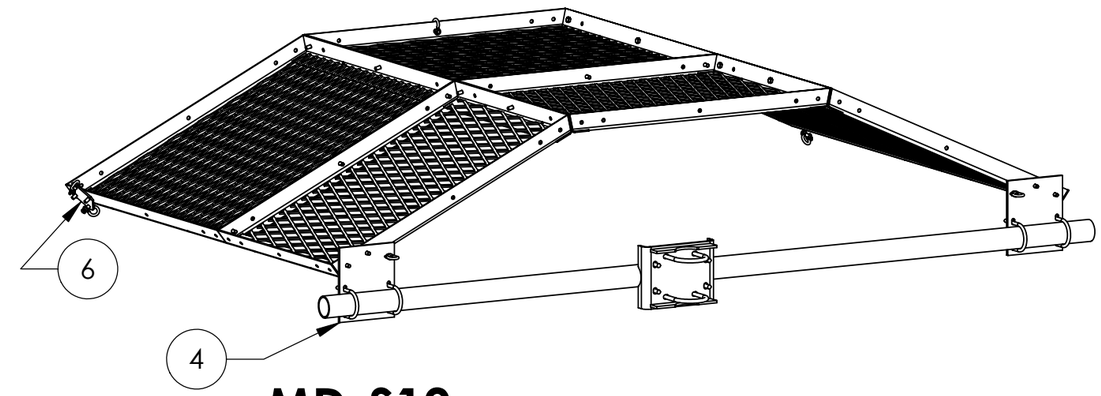

MD-S10

MD-S12

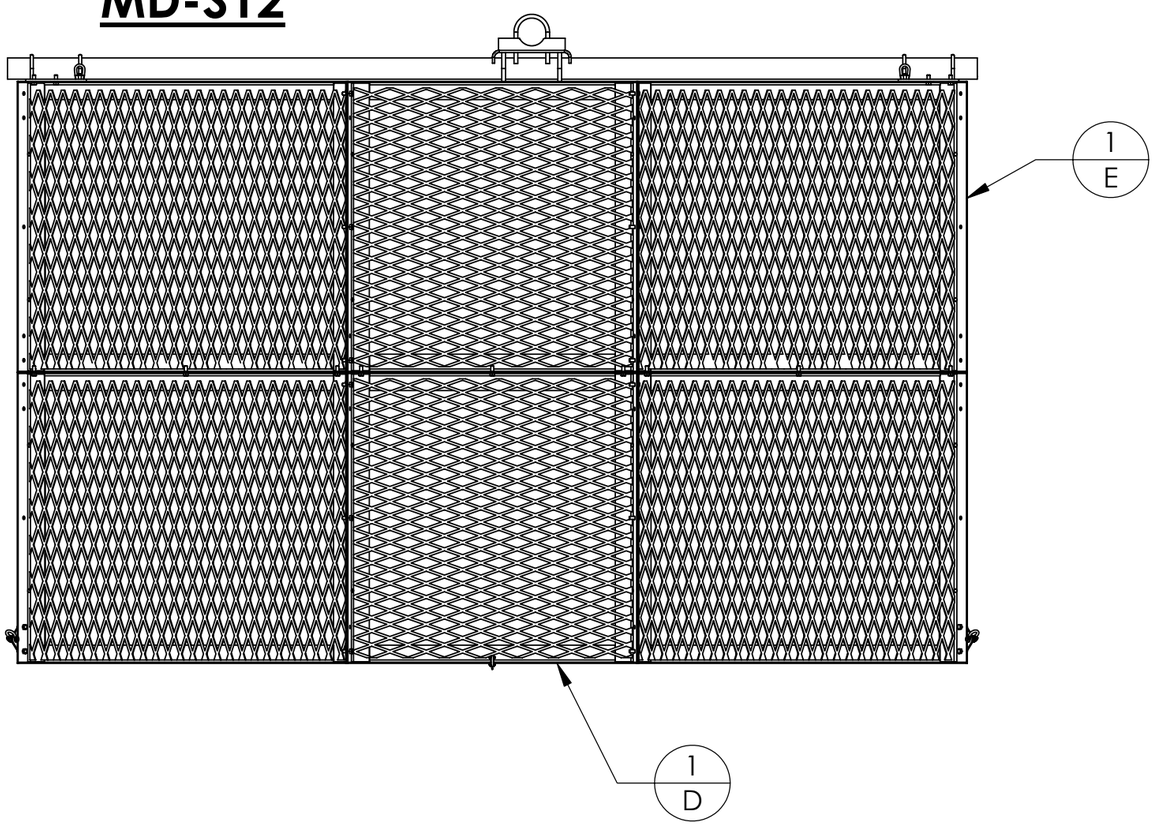

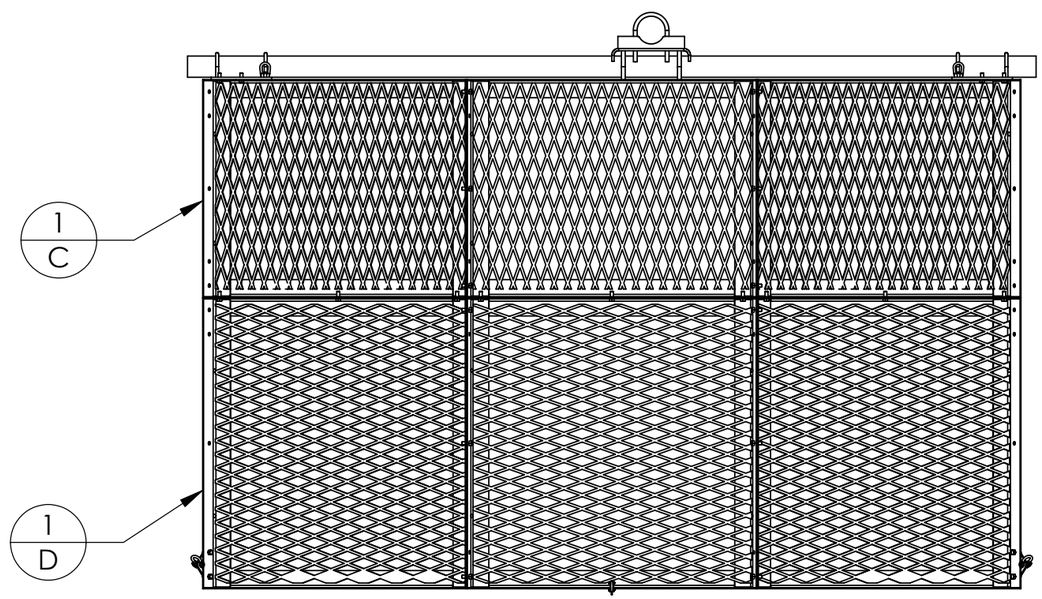

These drawings and specifications are the proprietary property of ANDREW CORPORATION and may be used only for the specific purpose authorized in writing by Andrew Corporation.

ALL DIMENSIONS ARE IN INCHES U.O.S.
TOLERANCES UNLESS OTHERWISE SPECIFIED:

.X = ± .06 ANGLES ± 2°
.XX = ± .03 FRACTIONS ± 1/32
.XXX= ± .010

REMOVE BURRS AND BREAK EDGES .005

DO NOT SCALE THIS PRINT

DRAWN BY: AW	SHEET: 3 of 3	PART NUMBER: MD-S
CHECKED BY: TP	SCALE: NTS	DESCRIPTION: MICROWAVE DISH SHIELD
DATE: 04/13/06	MATERIAL: A36	DRAWING TYPE: ASSEMBLY DRAWING
REVISION: A	FINISH: GALV A123	ANDREW® ORLAND PARK, IL. 60462 U.S.A.
	WEIGHT: 624.20	

Foundation Design

Spread footing verification

Input data

Project
Task : Foundation Design
Descript. : Three Towers, Afghanistan
Author : Rich Tocher, Jeremy Deuto
Customer : USAID
Date : 7/22/2010

Basic soil parameters

No.	Name	Pattern	φ_{ef} [°]	c_{ef} [psf]	γ [pcf]	γ_{su} [pcf]	δ [°]
1	Clayey Sand with Gravel		36.00	0.0	135.0	72.5	

All soils are considered as cohesionless for at rest pressure analysis.

Soil parameters
Clayey Sand with Gravel
Unit weight : γ = 135.0 pcf
Angle of internal friction : φ_{ef} = 36.00 °
Cohesion of soil : c_{ef} = 0.0 psf
Saturated unit weight : γ_{sat} = 135.0 pcf

Foundation

Foundation type: concentric spread footing
Depth from ground surface h_z = 7.92 ft
Depth of footing bottom d = 7.92 ft
Foundation thickness t = 3.28 ft
Incl. of finished grade s_1 = 0.00 °
Incl. of footing bottom s_2 = 0.00 °

Unit weight of soil above foundation = 135.0 pcf

Name : Foundation **Stage : 1**

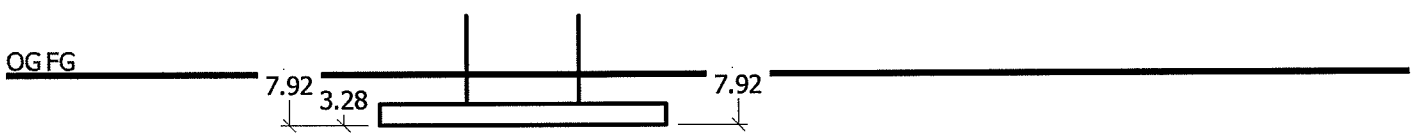

Geometry of structure

Foundation type: concentric spread footing
Spread footing length x = 45.00 ft
Spread footing width y = 45.00 ft
Column width in the direction of x c_x = 17.55 ft

[GEO5 for Cetrus - Spread Footing | version 5.10.39.0 | Copyright © 2010 Fine spol. s r.o. All Rights Reserved | www.finesoftware.eu]

Column width in the direction of y c_y = 17.55 ft
Spread footing volume = 6642.00 ft^3

Name : Geometry **Stage : 1**

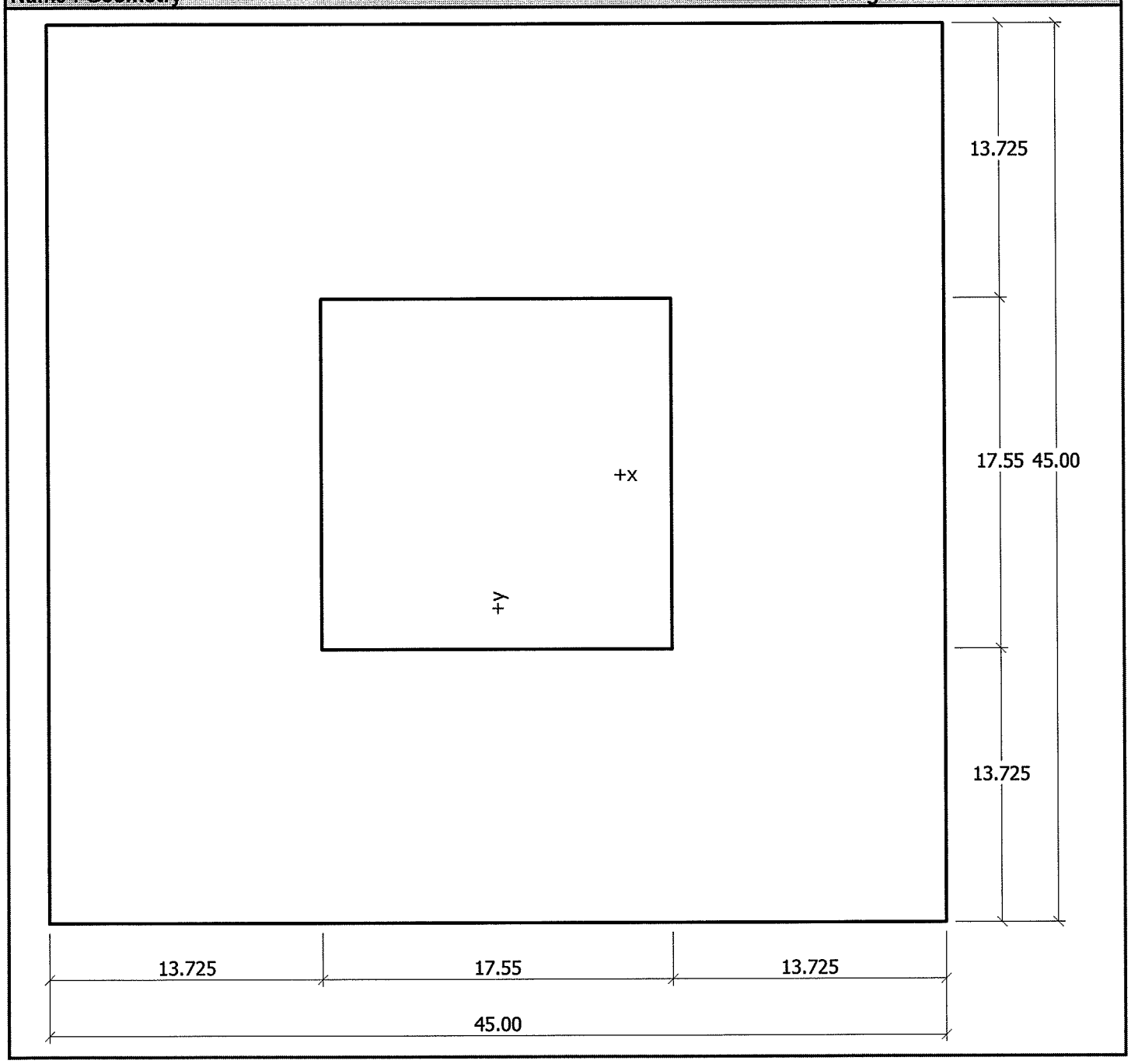

Material of structure

Unit weight γ = 150.0 pcf
Analysis of concrete structures carried out according to the standard ACI 31802.

Concrete : ACI
Compressive strength $f_{c'}$ = 4000.0 psi
Tensile-bending strength f_r = 474.3 psi

[GEO5 for Cetrus - Spread Footing | version 5.10.39.0 | Copyright © 2010 Fine spol. s r.o. All Rights Reserved | www.finesoftware.eu]

Elasticity modulus E_{cm} = 3605.0 ksi

Longitudinal steel : A615/60
Tensile strength f_y = 60000.0 psi
Elasticity modulus E_s = 29000.0 ksi

Transverse steel: A615/60
Tensile strength f_y = 60000.0 psi
Elasticity modulus E_s = 29000.0 ksi

Geological profile and assigned soils

No.	Layer [ft]	Assigned soil	Pattern
1	40.00	Clayey Sand with Gravel	
2	-	Clayey Sand with Gravel	

Load

No.	Load new	Load change	Name	Type	N [lbf]	M_x [lbfft]	M_y [lbfft]	H_x [lbf]	H_y [lbf]
1	YES		90 mph Wind, Moment in X	Design	400071.0	53636361.0	0.0	0.0	360555.0
2	YES		40 mph Wind, 2 Inches Ice, Moment in X	Design	2740149.0	27741858.0	0.0	0.0	180144.0
3	YES		90 mph Wind, Moment in Y	Design	400071.0	0.0	53636361.0	360555.0	0.0
4	YES		40 mph Wind, 2 Inches Ice, Moment in Y	Design	2740149.0	0.0	27741858.0	180144.0	0.0
5	YES		Max Corner Reactions at Base	Design	2515425.0	0.0	0.0	0.0	218190.0

Analysis settings

Type of analysis - Analysis for drained conditions
Analysis of vertical bearing capacity - NCMA
Analysis of settlement - Do not calculate
Bounding of influence zone - by percentage of Sigma,Or
Coeff. of bounding of influence zone = 10.00 %
Analysis carried out according to classical theory (safety factor)

Factor of safety - vertical bearing capacity = 1.50
Factor of safety - horizontal bearing capacity = 1.50

Masonry friction reduction factor μ = 0.90

Verification No. 1

Analysis carried out for the load case No. 3. (90 mph Wind, Moment in Y)
Computed weight of spread footing G = 996300.0 lbf
Computed weight of overburden Z = 1075527.2 lbf

Vertical bearing capacity check

Shape of contact stress : general

Parameters of slip surface below foundation:
Depth of slip surface z_{sp} = 89.10 ft
Length of slip surface l_{sp} = 298.84 ft

[GEO5 for Cetrus - Spread Footing | version 5.10.39.0 | Copyright © 2010 Fine spol. s r.o. All Rights Reserved | www.finesoftware.eu]

Design bearing capacity of found.soil R_d = 50095.2 psf
Extreme contact pressure σ = 21457.9 psf

Factor of safety = 2.33 > 1.50
Bearing capacity in the vertical direction is SATISFACTORY

Horizontal bearing capacity check

Earth resistance: 2/3 pass., 1/3 at rest
Design magnitude of earth resistance S_{pd} = 352875.5 lbf
Friction angle foundation-footing bottom ψ = 36.00 °
Cohesion foundation-footing bottom a = 0.0 psf

Horizontal bearing capacity R_{dh} = 1933933.3 lbf
Extreme horizontal force H = 360555.0 lbf

Factor of safety = 5.36 > 1.50
Bearing capacity in the horizontal direction is SATISFACTORY

Bearing capacity of foundation is SATISFACTORY

Dimensioning No. 1

Analysis carried out with automatic selection of the most unfavourable load cases.

Verification of longitudinal reinforcement of foundation in the direction of x

Bar number = 18
Number of bars = 68
Reinforcement cover = 1.00 in
Cross-section width = 45.00 ft
Cross-section depth = 3.28 ft

Reinforcement ratio ρ = 1.35 % > 0.33 % = ρ_{min}
Reinforcement ratio ρ = 1.35 % < 2.14 % = ρ_{max}
Ultimate moment ϕM_n = 40138774.4 lbfft > 37270105.7 lbfft = M_u

Cross-section is SATISFACTORY.

Verification of longitudinal reinforcement of foundation in the direction of y

Bar number = 18
Number of bars = 68
Reinforcement cover = 1.00 in
Cross-section width = 45.00 ft
Cross-section depth = 3.28 ft

Reinforcement ratio ρ = 1.35 % > 0.33 % = ρ_{min}
Reinforcement ratio ρ = 1.35 % < 2.14 % = ρ_{max}
Ultimate moment ϕM_n = 40138774.4 lbfft > 39635346.5 lbfft = M_u

Cross-section is SATISFACTORY.

Spread footing for punching shear failure check

Column normal force = 2740149.0 lbf
Force transmitted into found.soil = 786581.2 lbf
Force transmitted by shear strength of SRC = 1953567.8 lbf

Maximum shear force V_u = 42509.7 lbf/ft

[GEO5 for Cetrus - Spread Footing | version 5.10.39.0 | Copyright © 2010 Fine spol. s r.o. All Rights Reserved | www.finesoftware.eu]

Outline of critical cross-section u_{cr} = 25.40 ft
Shear force transmitted by concrete V_c = 50783.2 lbf/ft

$V_u < V_c$ => Reinforcement is not required

Spread footing for punching shear is SATISFACTORY

Name : Dimensioning **Stage : 1; Dimensioning : 1**

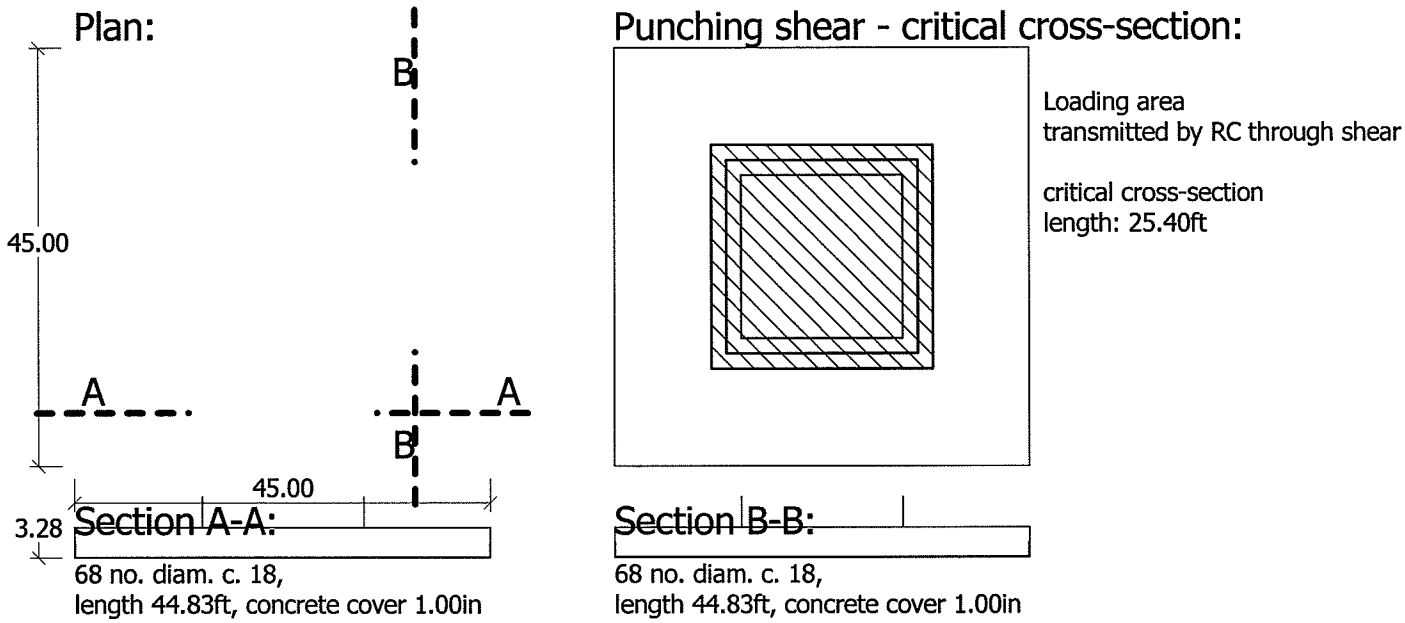

[GEO5 for Cetrus - Spread Footing | version 5.10.39.0 | Copyright © 2010 Fine spol. s r.o. All Rights Reserved | www.finesoftware.eu]

TETRA TECH • Professional Engineers •

Client: USAID Job No.: 133-013047-0001 Sheet ____ of ____

Description: Three Towers, Afghanistan Designed By: JD, RT Date: 8-3-10

Foundation Calculations Checked By: JAB Date: 8/3/10

Concrete Calculations (Volume)

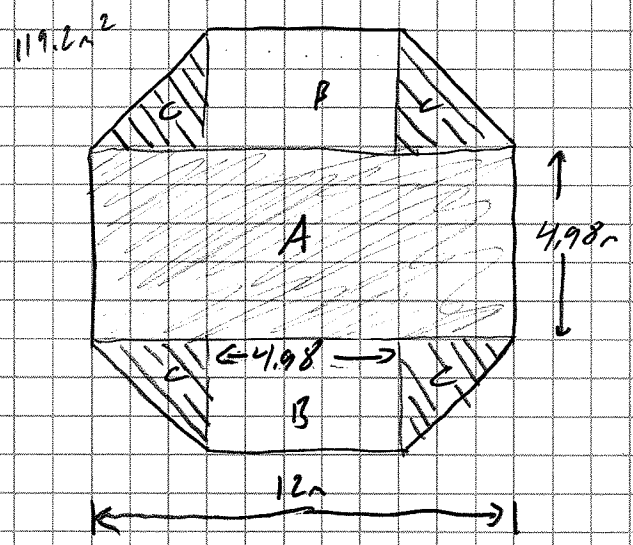

Volume of A

(4.98m)(12.0m)(1m)

Volume A = 59.76m³ (78.2cy)

Volume of B

(4.98)(3.51)(2)(1)

Volume of B = 34.96m³ (45.73cy)

Volume of C

(3.51)(3.51)(2)(1)

Volume of C = 24.64m³ (32.23cy)

Pedestal

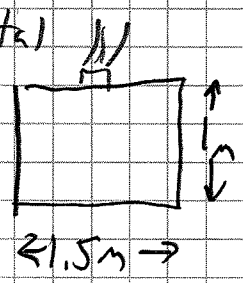

Volume of pedestal

$\pi(.75)^2(3)$

Volume = 5.30m³ (6.93cy)

Total Volume of concrete

(59.76)+(34.96)+(24.64)+(5.30)

124.66 m³ (~~165.67 cy~~) 163.06 cy

TETRA TECH • Professional Engineers •

Client: _____ Job No.: _____ Sheet ____ of ____

Description: _____ Designed By: _____ Date: _____

Checked By: _____ Date: _____

Downward Reaction @ Base (max)

838,475 lbs × 3 legs = 2,515,425 lbs (2,515.4 kip)

= 1146978 kg

Weight of concrete

(105.67)(150)(27) = 670.9 kips

= 304361 kg

Area of foundation = 119.2 m² (1283 ft²)

minimum allowable bearing capacity

$$\frac{(2{,}515.4\ \text{kip}) + (670.9\ \text{kip})}{1283\ \text{ft}^2} = 2483.5\ \text{lbs/ft}^2$$

$$\boxed{= 2500\ \text{lbs/ft}^2}$$

$$\boxed{1.22\ \text{kg/cm}^2}$$

August 10, 2010

TETRA TECH

Three Towers

Grounding Analysis Report

Revision 1

PROJECT NUMBER:
120334

PROJECT CONTACT:
TYLER KENT
EMAIL:
TYLER.KENT@POWERENG.COM
PHONE:
208-288-6418

PROJECT CONTACT:
KURT BELL, P.E.
EMAIL:
KBELL@POWERENG.COM
PHONE:
208-288-6343

PROJECT CONTACT:
JOHN SQUIRE, P.E.
EMAIL:
JSQUIRE@POWERENG.COM
PHONE:
503-293-7164

POWER ENGINEERS

Grounding Analysis Report

Prepared by POWER Engineers, Inc. for

Tetra Tech

Three Towers

For additional information contact:

Tyler Kent	(208) 288-6418	tyler.kent@powereng.com
Kurt Bell, P.E.	(208) 288-6343	kbell@powereng.com
John Squire, P.E.	(509) 293-7164	jsquire@powereng.com

Rev.	Issue Date	Issued For	Prep By	Chkd By	Appd By	Notes
0	08/06/2010	Impl	KPP	TRK	GKB	Issued for implementation
1	08/10/2010	Impl	TRK	GKB	JFS	Re-issued Based upon Tetra-Tech Comments

"Issued For" Definitions:

- "Prelim" means this document is issued for preliminary review, not for implementation
- "Appvl" means this document is issued for review and approval, not for implementation
- "Impl" means this document is issued for implementation
- "Record" means this document is issued after project completion for project files

TABLE OF CONTENTS

1.0 EXECUTIVE SUMMARY 1

2.0 SOIL STRUCTURE 3

3.0 DATA AND RESULTS – CASE 1 3

3.1 Grounding System Information 3
3.2 Grounding System Details 3

4.0 DATA AND RESULTS – CASE 2 4

4.1 Grounding System Information 4
4.2 Grounding System Details 4

5.0 DATA AND RESULTS – CASE 3 4

5.1 Grounding System Information 4
5.2 Grounding System Details 4

6.0 REFERENCES 5

6.1 Drawings 5
6.2 Soil Data 5
6.3 CDEGS Plots 5
6.4 CDEGS Impedance Reports 5
6.5 Software Information 5
6.5 Standards 6

LIST OF TABLES

Table 1: Soil Resistivity Model 3
Table 2: Summary of Case 1 Grounding System 3
Table 3: Summary of Case 2 Grounding System 4
Table 4: Summary of Case 3 Grounding System 4

1.0 EXECUTIVE SUMMARY

This grounding system analysis is for Tetra Tech's Three Towers project, located at Kandahar Airfield (KAF) in Kandahar province, Afghanistan. The site consists of one communications tower, presumptively one 20 kVA generator and various equipment buildings.

POWER Engineers, Inc.'s (POWER) engineering service for this study was to analyze the performance of the communication tower grounding system with the objective of meeting a grounding system resistance of 0.5 ohms. While it is possible to meet this goal, the final recommended design is based upon accepted industry and military standards, as defined in the paragraphs following, and an effort to meet a reasonable cost design.

Exact system resistance values to ensure a satisfactory grounding (earthing) electrode system (EES) resistance design guideline for communication systems are not listed as part of any standard. However, a maximum resistance to earth not to exceed 10 ohms is defined. The Military Handbook MIL-HDBK-419A, *Grounding, Bonding, and Shielding for Electronic Equipments and Facilities, Department of Defense, Washington DC, 1987,* recommends a "…the earth electrode subsystem should exhibit a resistance to earth of 10 ohms or less" (Section 1.2.2.1 a p. 1-6). The FAA–STD-019d, *Lightning and Surge Protection Grounding, bonding and shielding requirements For Facilities and Electronic Equipment, August 9th 2002*, states " The design goal for the resistance to earth of the EES shall be as low as practicable and not over 10 Ohms" (Section 3.8.3 p. 32).

While the maximum resistance value of 10 ohms is an accepted standard, Motorola defines a design goal of 5 ohms, per Standard 68P81089E50-B, *Motorola Standards and Guidelines for Communication Sites*, (Section 4.7.4.2, p. 4-47). As this was found from industry literature to be the lowest recommended value, it was used for evaluation in this assessment.

Low frequencies of DC and 50 Hz results in an impedance which is almost completely resistive (the reactive component is insignificant). Therefore, for the purpose of this report the 50 Hz impedance is reported for the resistance value, as this magnitude is a conservative approximation of the grounding system resistance.

Based upon the desired resistance of 0.5 ohms, industry standards, and cost analysis, the following three grounding system designs were developed and agreed upon by POWER's production team:

Case 1 (The recommended design, as presented in 100815 Prototype submission, based upon maximum allowable EES resistance of 5 ohms, with a calculated grounding system resistance of approximately 2.3 ohms):

- Approximately 550 meters of 95mm^2 copper conductor, consisting of:
    - A ground loop around the communication tower, approximately one (1) meter outside of the foundation, buried two (2) meters below grade,
    - A ground loop one (1) meter outside the fence line, buried 0.5 meter below grade.

- Approximately 50 meters of 50mm^2 copper conductor for equipment ties
- Twenty (20) ground rods, three (3) meters long, and each with a diameter of 0.016 meters.

Case 2 (Design meets project target grounding system resistance with a calculated grounding system resistance of approximately 0.49 ohms):

- Same as Case 1 with the addition of:
    - Approximately 13,400 meters of 95mm^2 copper conductor, consisting of:
        - A ground loop one (1) meter inside the fence line, buried 0.5 meter below grade.
        - A ground grid with six (6) meter spacing, extending 60 meters beyond the fence line, and buried 0.5 meter below grade.
    - An additional four (4) ground rods, three (3) meters long, each with a diameter of 0.016 meters, and placed on the corners of the extended mesh.

Case 3 (Design meets project target grounding system resistance of 0.5 ohms with a calculated grounding system resistance of approximately 0.49 ohms. However, is not recommended due to the use of deep ground wells as described in Section 5.2):

- Same as Case 1 with the addition of:
    - Two (2) 300 meters deep ground wells, each with a diameter of 0.15 meters and backfilled with bentonite.

This grounding system design is based upon an assumed onsite generator of 20 kVA with all equipment grounds tied to the neutral of the onsite generator, as defined by IEEE Standard 665-1995 (*Generating Station Grounding).* In addition, no exposed wires are expected on site, except at termination points. If the generator is moved off site, this grounding system design will need to be reevaluated to meet touch and step voltage compliance limits.

Grounding system designs are based upon a number of parameters, however the design is primarily a function of the soil structure resistivity, predicted maximum line to ground fault current, and expected fault clearing times. Soil resistivity measurements, and consequentially the grounding system design, can be affected by factors outside the control of the person conducting the tests (such as the moisture level of the soil and the presence of buried conductors within the vicinity of the testing probes). Therefore, POWER recommends testing of the completed grounding system to confirm that the grounding system performance is as predicted in the design. If the measured grounding system impedance is greater than the calculated value, additional studies are recommended. The addition of equipment or substation expansions may also necessitate additional analysis.

While this design is expected to create a low impedance path, this study does not take the place of a detailed lightning analysis. POWER, recommends once the final communication equipment has been selected, this design be reevaluated to ensure the impedance of the system meets all requirements of the lightning protection devices required.

2.0 SOIL STRUCTURE

The RESAP module of CDEGS was used to determine an equivalent optimized multi-layer soil model (Attachment 6) based on the raw soil resistivity measurement data. The resulting soil model is based upon two traverses of soil resistivity measurements provided by birmuhendislik engineering (Attachment 5).

Table 1: Soil Resistivity Model

LAYER	RESISTIVITY (OHM-M)	THICKNESS (METERS)
Top	642.2	3.83
Bottom	176.1	Infinite*

*Measured to a maximum depth of 10.4 meters.

3.0 DATA AND RESULTS – CASE 1

3.1 Grounding System Information

Table 2: Summary of Case 1 Grounding System

DESCRIPTION	VALUE
Total Length of Conductor	Approximately 550 m of 95mm^2 Stranded Bare Copper
	Approximately 50 m 50mm^2 Stranded Bare Copper
Ground Rod Totals	20 copper clad rods, 0.016 m in diameter and 3 m long
Grounding System Resistance	2.3 Ohms

3.2 Grounding System Details

Attachment 1 is a drawing of the grounding system of Case 1. This case is the recommended grounding system design. The grounding system results in a grounding system resistance of 2.3 ohms. While this is above the requested 0.5 ohm target impedance, this values falls below typically accepted values for the design guideline of the electrode system (EES) resistances.

4.0 DATA AND RESULTS – CASE 2

4.1 Grounding System Information

Table 3: Summary of Case 2 Grounding System	
DESCRIPTION	VALUE
Total Length of Conductor	Approximately 13,400 m of 95mm^2 Stranded Bare Copper
	Approximately 50 m 50mm^2 Stranded Bare Copper
Ground Rod Totals	20 copper clad rods, 0.016 m in diameter and 3 m long
Grounding System Resistance	0.49 Ohms

4.2 Grounding System Details

Attachment 2 is a drawing of the grounding system of Case 2. Case 2 adds approximately 12,850 meters of copper conductor. While this design meets the desired system resistance of 0.5 ohms; due to the addition of copper extending 60 meters beyond the fence line, in all directions, it is not recommended.

5.0 DATA AND RESULTS – CASE 3

5.1 Grounding System Information

Table 4: Summary of Case 3 Grounding System	
DESCRIPTION	VALUE
Total Length of Conductor	Approximately 550 m of 95mm^2 Stranded Bare Copper
	Approximately 50 m 50mm^2 Stranded Bare Copper
Ground Rod Totals	20 copper clad rods, 0.016 m in diameter and 3 m long
Ground Wells	2 Ground Wells, 0.15 m in diameter and 300 m deep, backfilled with bentonite
Grounding System Resistance	0.49 Ohms

5.2 Grounding System Details

Attachment 3 is a drawing of the grounding system of Case 3. While this third case does lower the ground system resistance to the desired level of 0.5 ohms, it is the most cost prohibitive design due to the required ground well installation. In addition, it is not recommended due to the increased

impedance (described below), which will result with the use of the ground wells. Since lightning is a high frequency RF signal, the use of deep ground wells causes larger impedances seen by the lightning strike, since the inductive reactance is proportional to frequency and the inductance is proportional to the length of the conductor. This phenomenon has been noted in the Military Handbook MIL-STD-1542B (USAF), *Electromagnetic Compatibility and Grounding Requirements for Space Systems Facilities, Department of Defense, Washington DC, 1991*, which states "This standard, MIL_HDBK-419, and MIL-STD-188-124 do not recommend the use of deep wells for the achievement of lower impedance to earth. Deep wells achieve low dc resistance, but have very small benefit in reducing ac impedance. The objective of the earth electrode subsystem is to reduce ac and dc potentials between and within equipment" (p. 19).

This option was provided as the limitation of the size of the facility, may require the use of ground wells to achieve the desired impedance of 0.5 ohms.

6.0 REFERENCES

The grounding system model, analysis, and results are based on the following data and software outputs. All pertinent reference data is included as attachments for reference. Any changes to or inaccuracies in this data may invalidate the results of the analysis.

6.1 Drawings

The grounding system model was developed from the following drawings for this investigation:

- Tetra Tech – TWR01 C-001 Rev. A – PAS Required Equipment (Attachment 4)

6.2 Soil Data

- The soil resistivity data for this project was provided by birmuhendislik engineering, in a document titled "Geotechnical Report for PN 74076, Perimeter Fencing KAD Kandahar Airfield, Afghanistan", dated March 2010 (Attachment 5).

6.3 CDEGS Plots

- Soil Resistivity Model Plot (Attachment 6)

6.4 CDEGS Impedance Reports

- Case 1 Impedance Report near DC(0.00001Hz) and 50 Hz (Attachment 7)
- Case 2 Impedance Report near DC(0.00001Hz) and 50 Hz (Attachment 8)
- Case 3 Impedance Report near DC(0.00001Hz) and 50 Hz (Attachment 9)

6.5 Software Information

This grounding study was performed using the SES (Safe Engineering Services and technologies ltd.) CDEGS (Current Distribution, Electromagnetic Fields, Grounding, and Soil Structure Analysis) version 13.4.28.0 software package.

6.5 Standards

- MIL-HDBK-419A, *Grounding, Bonding, and Shielding for Electronic Equipments and Facilities, Department of Defense, Washington DC, 1987*
- FAA–STD-019d, *Lightning and Surge Protection Grounding, bonding and shielding requirements For Facilities and Electronic Equipment, August 9th 2002*
- IEEE Standard 665, *Generating Station Grounding, 1995*
- MIL-STD-1542B (USAF), *Electromagnetic Compatibility and Grounding Requirements for Space Systems Facilities, Department of Defense, Washington DC, 1991*
- Standard 68P81089E50-B, *Motorola Standards and Guidelines for Communication Sites*, 2005

ATTACHMENTS

Attachment 1 – Case 1 Grounding System Design

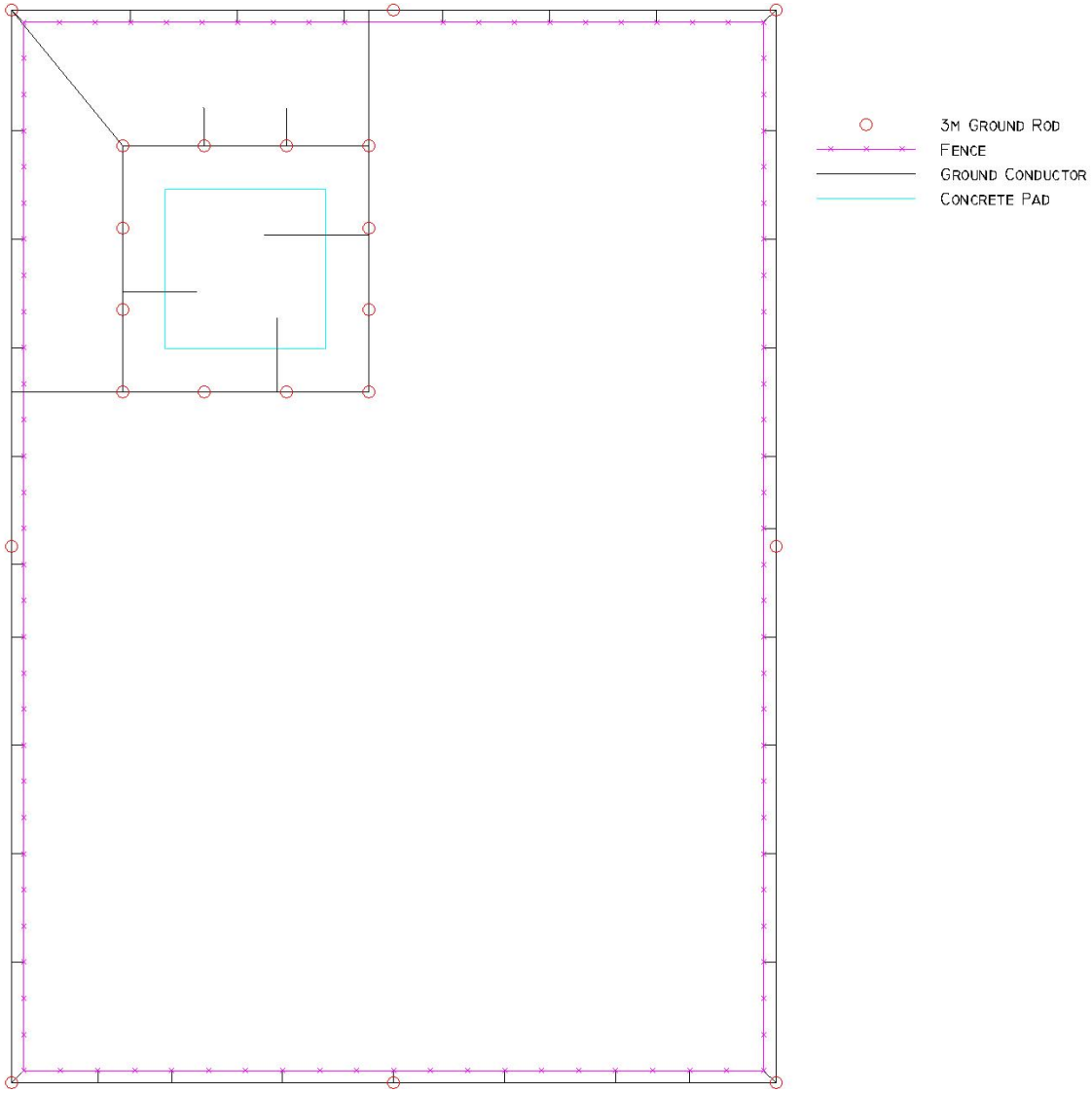

Attachment 2 – Case 2 Grounding System Design

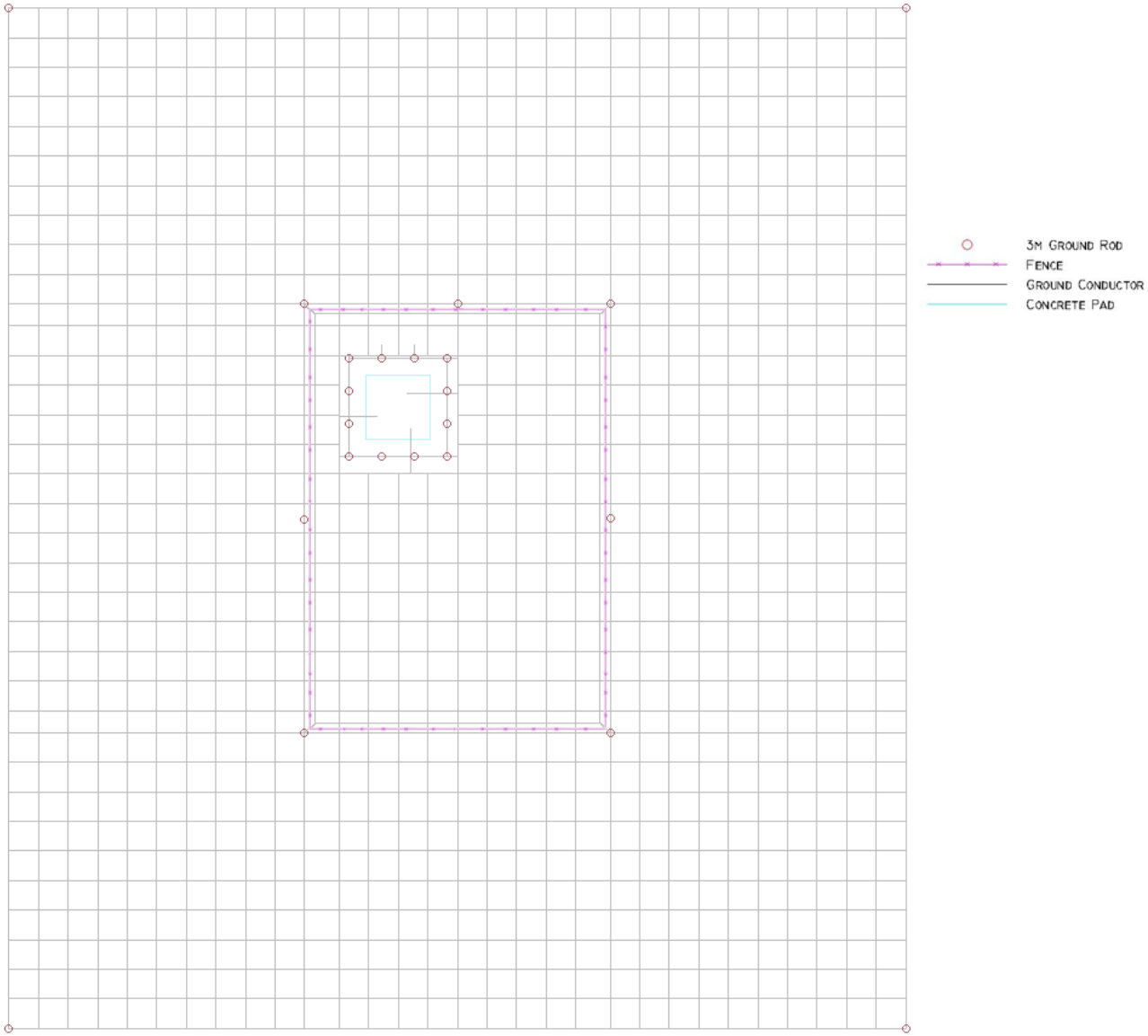

Attachment 3 – Case 3 Grounding System Design

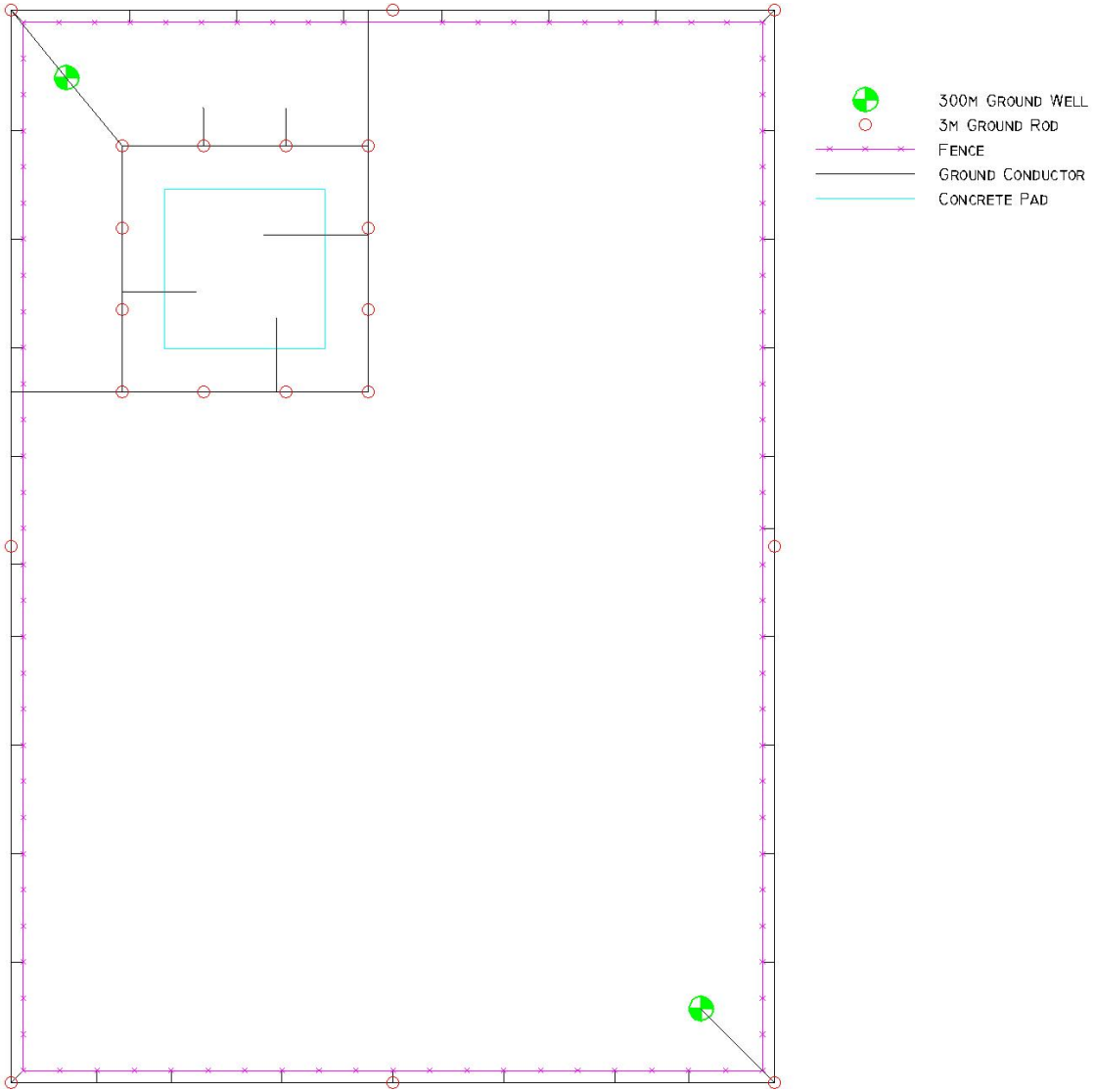

Attachment 4 – Tetra Tech TWR01 C-001

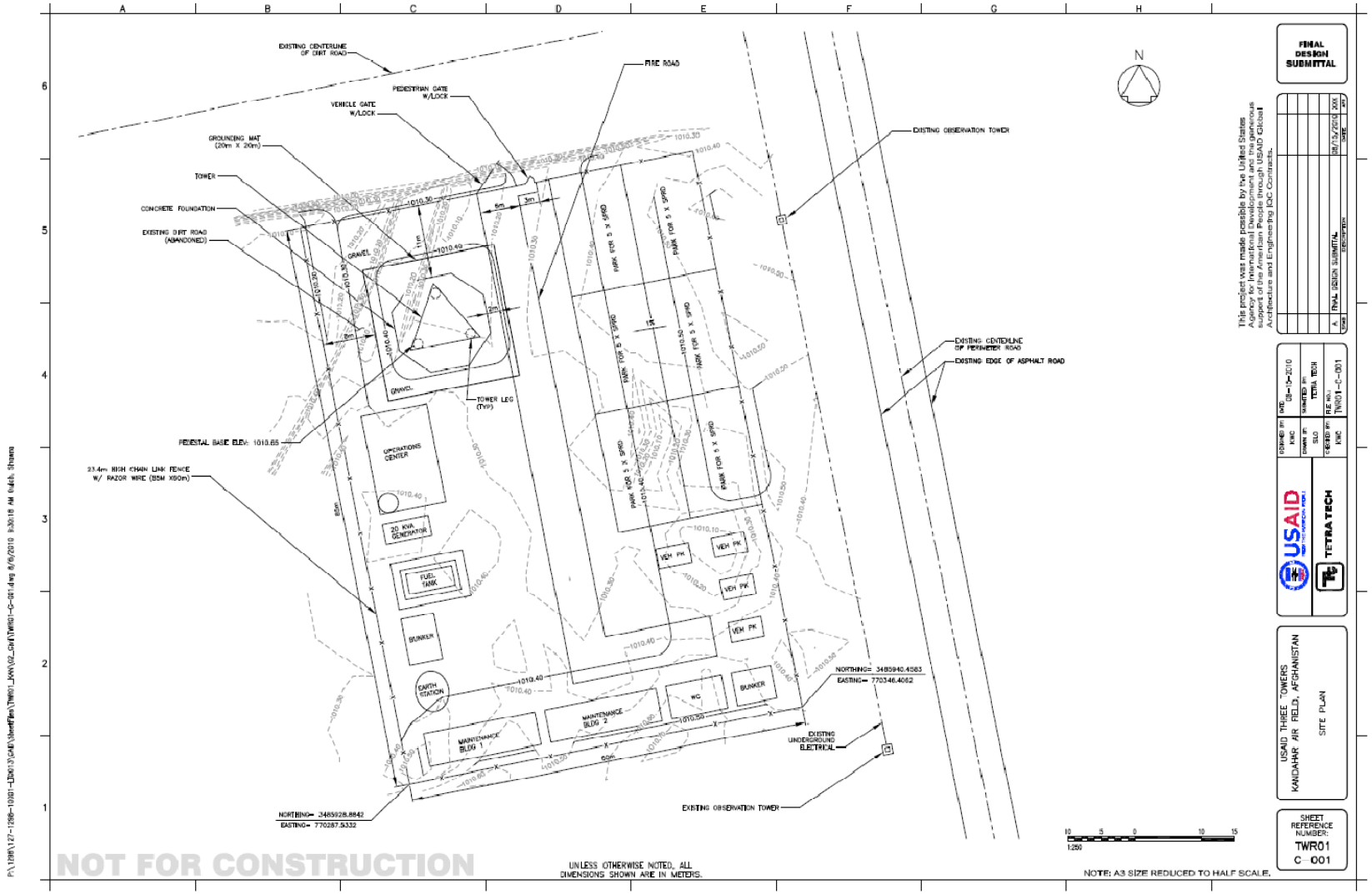

Attachment 5 – Soil Resistivity Measurements

SOIL RESISTIVITY DATA - WENNER METHOD

CLIENT	USAID	DATE	7/17/2010
LOCATION	KAF-DEEP SOUTH / N-S TRAVERSE	TEST ENGINEER	ABH
SOIL TYPE	SANDY SILT WITH GRAVEL	TEST EQUIPMENT	
WEATHER	CLEAR, 110°, SL. BREEZE	SOIL CONDITION	DRY

TEST POINT	PROBE SPACING (FEET)	RESISTANCE READING (R OHMS)	RESISTIVITY (OHM-METERS)
1	4.9	68.6	644.17
2	9.75	32.4	605.38
3	14.6	18.2	509.22
4	19.5	10.2	381.17
5	24.4	7.0	327.32
6	29.25	5.1	285.87
7	34.1	4.0	261.39

SOIL RESISTIVITY p CALCULATION

p=2*0.305*(Pi)AR (OHM-FEET)
A=PROBE SPACING, FEET
R=RESISTANCE, OHMS
METERS = 0.305 FEET
Therefore:
p=2*0.305*3.1415926*R*A

NOTES:
Z Ground probe contact resistance reduced by saturating probe location with drinking water.

Attachment 6 – Soil Model

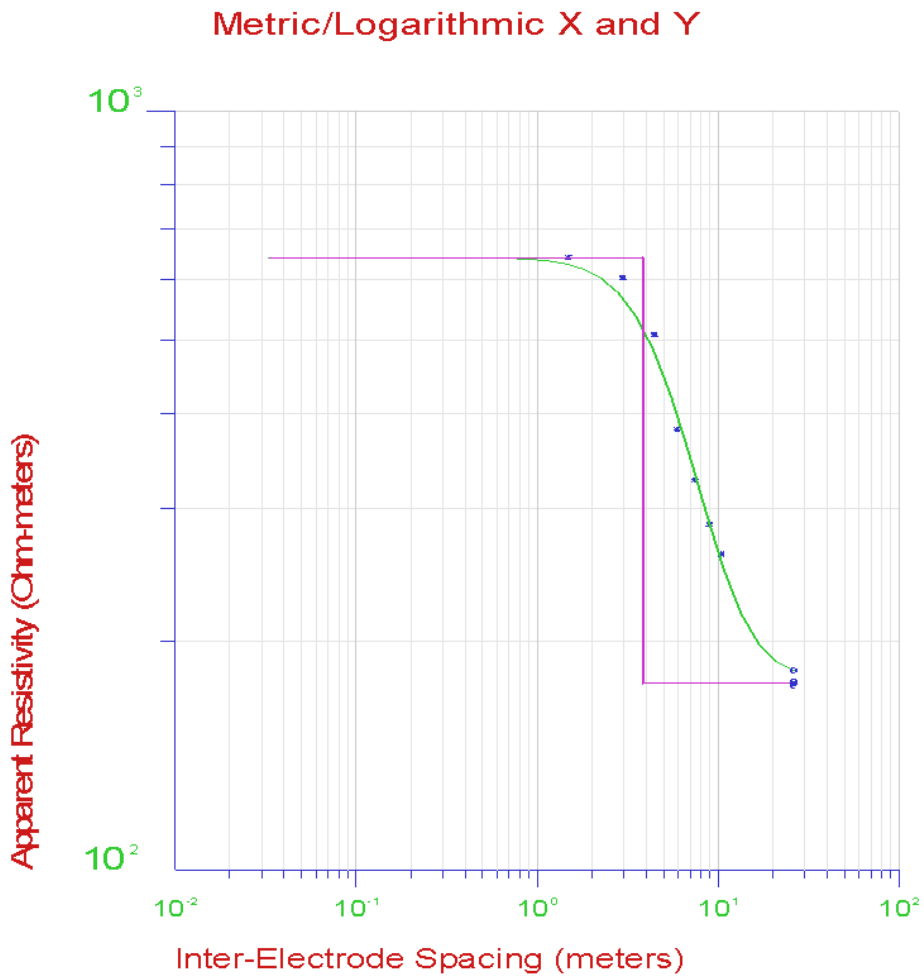

LEGEND

- Measured Data
- Computed Results Curve
- Soil Model

Measurement Method..: Wenner
RMS error.....: 3.769%

Layer Number	Resistivity (Ohm-m)	Thickness (Meters)
Air	Infinite	Infinite
2	642.2295	3.829498
3	176.0791	infinite

RESAP <Three_Towers_Travers>

Attachment 7 – Case 1 CDEGS Impedance Report

```
===========< M A L Z       ( SYSTEM INFORMATION SUMMARY ) >===========
 Run ID.....................................: Three_Towers_50_Hz
 System of Units ...........................: Metric
 Earth Potential/Magnetic Field Calculations : Potentials
 Number of Energization Source Busses .......:     1
 Current Injected in Reference Source Bus....: 0.0766964 + j0.997054 Amps
 Energization Scaling Factor (SPLITS/FCDIST/specified)..:   1.0000
 Number of Original Conductors ..............:   184
 Number of Frequency Values to be Analyzed...:     2
 Power Source Frequency......................:  0.10000E-04 Hertz
 Impedance Values are Based On...............:   50.000     Hertz
 Total Length of Conductor Network...........:   943.67     meters
1

 CHARACTERISTICS OF MEDIA SURROUNDING NETWORK
 ============================================
 AIR LAYER :  Resistivity............:  0.100000E+13 ohm-meters
            Relative Permittivity..:   1.00000
            Relative Permeability..:   1.00000

 >>> SOIL TYPE : Multi-Layer Horizontal

 LAYER RESISTIVITY  |------ RELATIVE -------|   THICKNESS
  No.  (ohm-meter)  Permittivity Permeability   (meters)
 ----- ------------ ------------ ------------ ------------
    1   642.230       1.00000       1.00000       3.82950
    2   176.079       1.00000       1.00000      Infinite
1

 Case Number................................:     1
 Frequency for This Case....................:  0.10000E-04  Hertz
 GPR of Reference Source Bus (#  1)....Magn..:     2.244296     Volts
                                 Angle.:     85.60130     degrees

 Impedance of Grounding System.........Magn..:     2.244297     Ohms
                                 Angle.:     0.000000     degrees
1

 Case Number................................:     2
 Frequency for This Case....................:   50.000      Hertz
 GPR of Reference Source Bus (#  1)....Magn..:     2.245531     Volts
                                 Angle.:     85.97411     degrees

 Impedance of Grounding System.........Magn..:     2.245532     Ohms
                                 Angle.:    0.3728025     degrees
```

Attachment 8 – Case 2 CDEGS Impedance Report

```
===========< M A L Z       ( SYSTEM INFORMATION SUMMARY ) >===========
Run ID.....................................: Three_Towers_50_Hz_6
 System of Units ............................: Metric
 Earth Potential/Magnetic Field Calculations : None
 Number of Energization Source Busses .......:     1
 Current Injected in Reference Source Bus....: 0.0499376 + j0.998752 Amps
 Energization Scaling Factor (SPLITS/FCDIST/specified)..:   1.0000
 Number of Original Conductors ..............:   259
 Number of Frequency Values to be Analyzed...:     2
 Power Source Frequency......................:  0.10000E-04 Hertz
 Impedance Values are Based On...............:   50.000     Hertz
 Total Length of Conductor Network...........:   13766.     meters
1

 CHARACTERISTICS OF MEDIA SURROUNDING NETWORK
 ============================================
 AIR LAYER :  Resistivity............:  0.100000E+13 ohm-meters
            Relative Permittivity..:   1.00000
            Relative Permeability..:   1.00000

 >>> SOIL TYPE : Multi-Layer Horizontal

 LAYER RESISTIVITY  |------ RELATIVE -------|   THICKNESS
  No.  (ohm-meter)  Permittivity Permeability   (meters)
 ----- ------------ ------------ ------------ ------------
    1   642.230       1.00000       1.00000       3.82950
    2   176.079       1.00000       1.00000      Infinite
1

 Case Number................................:     1
 Frequency for This Case....................:  0.10000E-04  Hertz
 GPR of Reference Source Bus (#  1)....Magn..:    0.4868480     Volts
                              Angle.:     87.13760     degrees

 Impedance of Grounding System.........Magn..:    0.4868481     Ohms
                              Angle.:     0.000000     degrees
1

 Case Number................................:     2
 Frequency for This Case....................:   50.000      Hertz
 GPR of Reference Source Bus (#  1)....Magn..:    0.4872929     Volts
                              Angle.:     87.88173     degrees

 Impedance of Grounding System.........Magn..:    0.4872931     Ohms
                              Angle.:    0.7441329     degrees
```

Attachment 9 – Case 3 CDEGS Impedance Report

```
===========< M A L Z       ( SYSTEM INFORMATION SUMMARY ) >===========
 Run ID.....................................: Three_Towers_50_Hz_G
 System of Units ...........................: Metric
 Earth Potential/Magnetic Field Calculations : None
 Number of Energization Source Busses .......:     1
 Current Injected in Reference Source Bus....: 0.0766964 + j0.997054 Amps
 Energization Scaling Factor (SPLITS/FCDIST/specified)..:   1.0000
 Number of Original Conductors ..............:   187
 Number of Frequency Values to be Analyzed...:     2
 Power Source Frequency......................:  0.10000E-04 Hertz
 Impedance Values are Based On...............:   50.000     Hertz
 Total Length of Conductor Network...........:   1551.7     meters
1

 CHARACTERISTICS OF MEDIA SURROUNDING NETWORK
 ============================================
 AIR LAYER :  Resistivity............:  0.100000E+13 ohm-meters
            Relative Permittivity..:   1.00000
            Relative Permeability..:   1.00000

 >>> SOIL TYPE : Multi-Layer Horizontal

 LAYER RESISTIVITY  |------ RELATIVE -------|   THICKNESS
  No.  (ohm-meter)  Permittivity Permeability   (meters)
 ----- ------------ ------------ ------------ ------------
    1   642.230       1.00000       1.00000       3.82950
    2   176.079       1.00000       1.00000      Infinite
1

 Case Number................................:     1
 Frequency for This Case....................:  0.10000E-04  Hertz
 GPR of Reference Source Bus (#  1)....Magn..:    0.4768008     Volts
                              Angle.:     85.60130     degrees

 Impedance of Grounding System.........Magn..:    0.4768010     Ohms
                              Angle.:     0.000000     degrees
1

 Case Number................................:     2
 Frequency for This Case....................:   50.000      Hertz
 GPR of Reference Source Bus (#  1)....Magn..:    0.4878750     Volts
                              Angle.:     93.38426     degrees

 Impedance of Grounding System.........Magn..:    0.4878752     Ohms
                              Angle.:     7.782959     degrees
```