ISLAMIC REPUBLIC OF AFGHANISTAN
AFGHANISTAN ENGINEERING SUPPORT PROGRAM (AESP)

GHAZI BOYS HIGH SCHOOL

SITE LAYOUT, GRADING, AND UTILITY DRAWINGS - ADDENDUM 2

KABUL, AFGHANISTAN

DATE: DECEMBER 22, 2010

ADDENDUM 2 SUBMITTAL

This project was made possible by the United States Agency for International Development and the generous support of the American People through USAID Global Architecture and Engineering IQC Contracts.

SYMB	DESCRIPTION	DATE	APR
B	MODIFICATION OF COVER SHEET FOR ADD #2	12/22/10	BRG
A	MODIFICATION OF COVER SHEET FOR ADD #1	11/01/10	BRG
	BID DOCUMENT SUBMITTAL	09/09/10	BRG
	100% DESIGN SUBMITTAL	07/06/10	BRG
	95% DESIGN SUBMITTAL	06/03/10	NJB

DESIGNED BY: NJB
DWN BY: JLH
CHK BY: BRG
DATE: 12/22/2010
SUBMITTED BY: TETRA TECH
FILE NO.: LT0005-G-01

USAID FROM THE AMERICAN PEOPLE

A E S P

USAID – OIEE
GHAZI BOYS HIGH SCHOOL
COVER SHEET

SHEET REFERENCE NUMBER:
LT0005 G-01

P:\1298\Work Orders\WO-LT\WO-LT-0005 GBHS Utility Design\CAD\Conceptual\Civil\DWG\WOLT05-G-01.dwg 12/21/2010 2:32:55 PM Harris, Jessica

INDEX OF DRAWINGS
GHAZI BOYS HIGH SCHOOL

SHT. REF. NO.	REVISIONS REV. NO.	REVISIONS ISSUE DATE	DRAWING TITLE
GENERAL DRAWINGS			
G-01	2 B C	12-22-10	COVER SHEET
G-02	2 B C	12-22-10	INDEX OF DRAWINGS
CIVIL DRAWINGS			
C-01	1 B	11-01-10	CIVIL LEGEND, SYMBOLS, GENERAL NOTES AND ABBREVIATIONS
C-02.1	0	07-06-10	SITE KEY PLAN
C-02.2	0 A	07-06-10	SITE DEMOLITION PLAN
C-03.1 TO C-03.6	2 B C	12-22-10	SITE LAYOUT PLANS
C-04.1 TO C-04.6	2 B C	12-22-10	GRADING AND DRAINAGE PLANS
C-05.1 TO C-05.4	1 B	11-01-10	SITE AND GRADING DETAILS
C-06	2 B C	12-22-10	COMBINED SITE INFRASTRUCTURE PLAN FOR UTILITIES
C-07.1 TO C-07.2	2 B C	12-22-10	WATER AND SEWER UTILITY PLANS
C-08.1 TO C-08.3	1 B C	11-01-10	WATER AND SEWER DETAILS
C-09.1 TO C-09.3	0	07-06-10	WELL DETAILS
C-10	1 B	11-01-10	POTABLE WATER TANK PLAN
C-11	0	07-06-10	POTABLE WATER TANK SECTIONS
C-12	1 B	11-01-10	POTABLE WATER TANK NOTES AND DETAILS
C-13	0	07-06-10	GREYWATER TANK PLANS
C-14	0	07-06-10	GREYWATER TANK SECTIONS
C-15	1 B	11-01-10	GREYWATER TANK NOTES AND DETAILS
C-16	1 B	11-01-10	SANITARY PUMP STATION
C-17	0	07-06-10	SANITARY PUMP STATION CONTROL PANEL DIAGRAM
C-18	1 B	11-01-10	SANITARY PUMP STATION DETAILS
C-19	0	07-06-10	WASTEWATER TREATMENT PLANT LAYOUT
C-20	0	07-06-10	WASTEWATER TREATMENT PROCESS AND INSTRUMENTATION DIAGRAM
C-21	0	07-06-10	WASTEWATER TREATMENT PLANT SLAB DETAILS
C-22	0	07-06-10	DOMESTIC WATER PUMP HOUSE LAYOUT PLAN
ARCHITECTURAL DRAWINGS			
A-01	0	07-06-10	PUMP HOUSE SYMBOLS AND ABBREVIATIONS
A-02	0	07-06-10	PUMP HOUSE FLOOR PLAN
A-03	0	07-06-10	PUMP HOUSE ROOF PLAN
A-04.1 TO A-04.2	0	07-06-10	PUMP HOUSE BUILDING ELEVATIONS
A-05	0	07-06-10	PUMP HOUSE BUILDING SECTIONS
A-06	0	07-06-10	PUMP HOUSE REFLECTED CEILING PLAN
A-07	0	07-06-10	PUMP HOUSE WALL SECTIONS AND DETAILS
A-08	0	07-06-10	PUMP HOUSE MISCELLANEOUS DETAILS
A-09	0	07-06-10	PUMP HOUSE STAIR DETAILS AND SCHEDULES
STRUCTURAL DRAWINGS			
S-01.1 TO S-01.2	0	07-06-10	PUMP HOUSE STRUCTURAL GENERAL NOTES
S-02	0	07-06-10	PUMP HOUSE FOUNDATION PLAN
S-03	0	07-06-10	PUMP HOUSE ROOF FRAMING PLAN
S-04	0	07-06-10	PUMP HOUSE SECTION
S-05	0	07-06-10	PUMP HOUSE TYPICAL CMU WALL DETAILS
S-06	0	07-06-10	PUMP HOUSE ROOF AND FOUNDATION DETAILS
MECHANICAL DRAWINGS			
M-01	0	07-06-10	PUMP HOUSE MECHANICAL FLOOR PLAN
ELECTRICAL DRAWINGS			
E-01	0	07-06-10	ELECTRICAL LEGEND, SYMBOLS, GENERAL NOTES AND ABBREVIATIONS
E-02	2 B C	12-22-10	ELECTRICAL SITE PLAN
E-03.1 TO E03.2	2 A C	12-22-10	ENLARGED ELECTRICAL SITE PLANS
E-04	1 C	12-22-10	ENLARGED ELECTRICAL GROUNDING PLAN
E-05	0	07-06-10	ELECTRICAL ONE-LINE DIAGRAM
E-06	0	07-06-10	ELECTRICAL UNIT SUBSTATION ELEVATION
E-07	0	07-06-10	ELECTRICAL DETAILS UNDERGROUND STRUCTURES
E-08.1	1 C	12-22-10	ELECTRICAL DETAILS FUEL OIL TANK
E-08.2	0 C	12-22-10	ELECTRICAL DETAILS FUEL SYSTEM
E-09	0	07-06-10	ELECTRICAL DETAILS TRANSFORMER AND GENERATOR
E-10.1	0	07-06-10	PUMP HOUSE ELECTRICAL FLOOR PLAN, SCHEDULES AND LEGEND
E-10.2	0	07-06-10	PUMP HOUSE ELECTRICAL DIAGRAMS AND DETAILS

ADDENDUM 2 SUBMITTAL

This project was made possible by the United States Agency for International Development and the generous support of the American People through USAID Global Architecture and Engineering IQC Contracts.

SYMB	DESCRIPTION	DATE	APR
A	ADDENDUM 2 DRAWINGS	12/22/10	BRG
A	SHEET MODIFICATIONS FOR NEW ADMIN BLDG	11/01/10	BRG
A	BID DOCUMENT SUBMITTAL	09/09/10	BRG
	100% DESIGN SUBMITTAL	07/06/10	BRG
	95% DESIGN SUBMITTAL	06/03/10	NJB

DESIGNED BY: NJB | DATE: 12/22/2010
DWN BY: JLH | SUBMITTED BY: TETRA TECH
CHK BY: BRG | FILE NO.: LT0005-G-02

USAID FROM THE AMERICAN PEOPLE

AESP

USAID – OIEE
GHAZI BOYS HIGH SCHOOL
INDEX OF DRAWINGS

SHEET REFERENCE NUMBER:
LT0005 G–02

P:\1298\Work Orders\WO-LT\WO-LT-0005 GBHS Utility Design\CAD\Conceptual\Civil\DWG\WOLT05-G-02.dwg 12/21/2010 4:25:44 PM Harris, Jessica

GENERAL NOTES:

1. ALL DIMENSIONS ARE IN MILLIMETERS UNLESS NOTED OTHERWISE.
2. ALL PIPE SIZES ARE IN MILLIMETERS UNLESS NOTED OTHERWISE.
3. STATIONS, ELEVATIONS, AND COORDINATES ARE IN METERS.

ABBREVIATIONS

CONC	CONCRETE
CORR	CORRUGATED
CPVC	CHLORINATED POLYVINYL CHLORIDE
DI	DUCTILE IRON
ELEV	ELEVATION
EQ	EQUAL
FFE	FINISHED FLOOR ELEVATION
FM	FORCE MAIN
FRP	FIBERGLASS REINFORCED POLYESTER
GV	GATE VALVE
GW	GREYWATER
HDPE	HIGH DENSITY POLYETHYLENE
HYD	HYDRANT
INV	INVERT
LCMH	LEVEL CONTROL MANHOLE
MJ	MECHANICAL JOINT
NIC	NOT IN CONTRACT
PEN	PENETRATION
PS	PUMP STATION
PVC	POLYVINYL CHLORIDE
PVT	PAVEMENT
R&D	REMOVE & DISPOSE
S	SEWER
SMH	SEWER MANHOLE
SST	STAINLESS STEEL
SVC	SERVICE
TOC	TOP OF CONCRETE
TYP	TYPICAL
UNO	UNLESS NOTED OTHERWISE
VCC	VERTICAL CONCRETE CURB
W/	WITH
W	WATER
WSO	WATER SHUT OFF
WWTP	WASTEWATER TREATMENT PLANT

PROPOSED	EXISTING	DESCRIPTION
		CHECK VALVE
Ⓦ		PRODUCTION WELL
		REDUCER
WSO		WATER SHUT OFF
		GATE VALVE
		BALL VALVE
PS		PUMP STATION
		CAP
		CLEAN OUT
Ⓖ		GRINDER PUMP
Ⓢ		SEWER MANHOLE
		SURVEY BENCHMARK
		PROPOSED CONCRETE
		REMOVE AND REPLACE EXISTING CONCRETE
		CRUSHED GRAVEL
		EXISTING TUBE WELL

PROPOSED	DESCRIPTION
℄	ROAD
W 150 W	DOMESTIC WATER LINE (W/SIZE)
S 150 S	GRAVITY SEWER (W/SIZE)
UGE UGE	UNDERGROUND ELECTRIC
SFM 100 SFM	SEWER FORCE MAIN (W/SIZE)
GW GW 150 GW	GREY WATER LINE (W/SIZE)
X X	CHAIN LINK FENCE

PIPE SIZES SHOWN ON DRAWINGS METRIC (mm)	NOMINAL PIPE SIZES ENGLISH (INCH)
8	1/4"
15	1/2"
20	3/4"
25	1"
32	1 1/4"
40	1 1/2"
50	2"
65	2 1/2"
80	3"
90	3 1/2"
100	4"
150	6"
200	8"
250	10"
300	12"
350	14"
375	15"
400	16"
450	18"
600	24"

UNLESS OTHERWISE NOTED, LINEAR DIMENSIONS SHOWN ARE IN MILLIMETERS.

BID DOCUMENT SUBMITTAL

This project was made possible by the United States Agency for International Development and the generous support of the American People through USAID Global Architecture and Engineering IQC Contracts.

SYMB	DESCRIPTION	DATE	APR
A	ADDED ADDITIONAL SYMBOLS	11/01/10	BRG
	BID DOCUMENT SUBMITTAL	09/09/10	BRG
	100% DESIGN SUBMITTAL	07/06/10	BRG
	95% DESIGN SUBMITTAL	06/03/10	NJB

DESIGNED BY: NJB | DWN BY: EWK | CHK BY: BRG
DATE: 11/01/10 | SUBMITTED BY: TETRA TECH | FILE NO.: LT0005A-C-01

USAID FROM THE AMERICAN PEOPLE

AESP

USAID – OIEE
GHAZI BOYS HIGH SCHOOL
CIVIL LEGEND, SYMBOLS, GENERAL NOTES, AND ABBREVIATIONS

SHEET REFERENCE NUMBER:
LT0005 C-01

P:\1298\Work Orders\WO-LT\WO-LT-0005 GBHS Utility Design\CAD\Conceptual\Civil\DWG\WOLT05-C-001.dwg 11/6/2010 2:42:29 PM Harris, Jessica

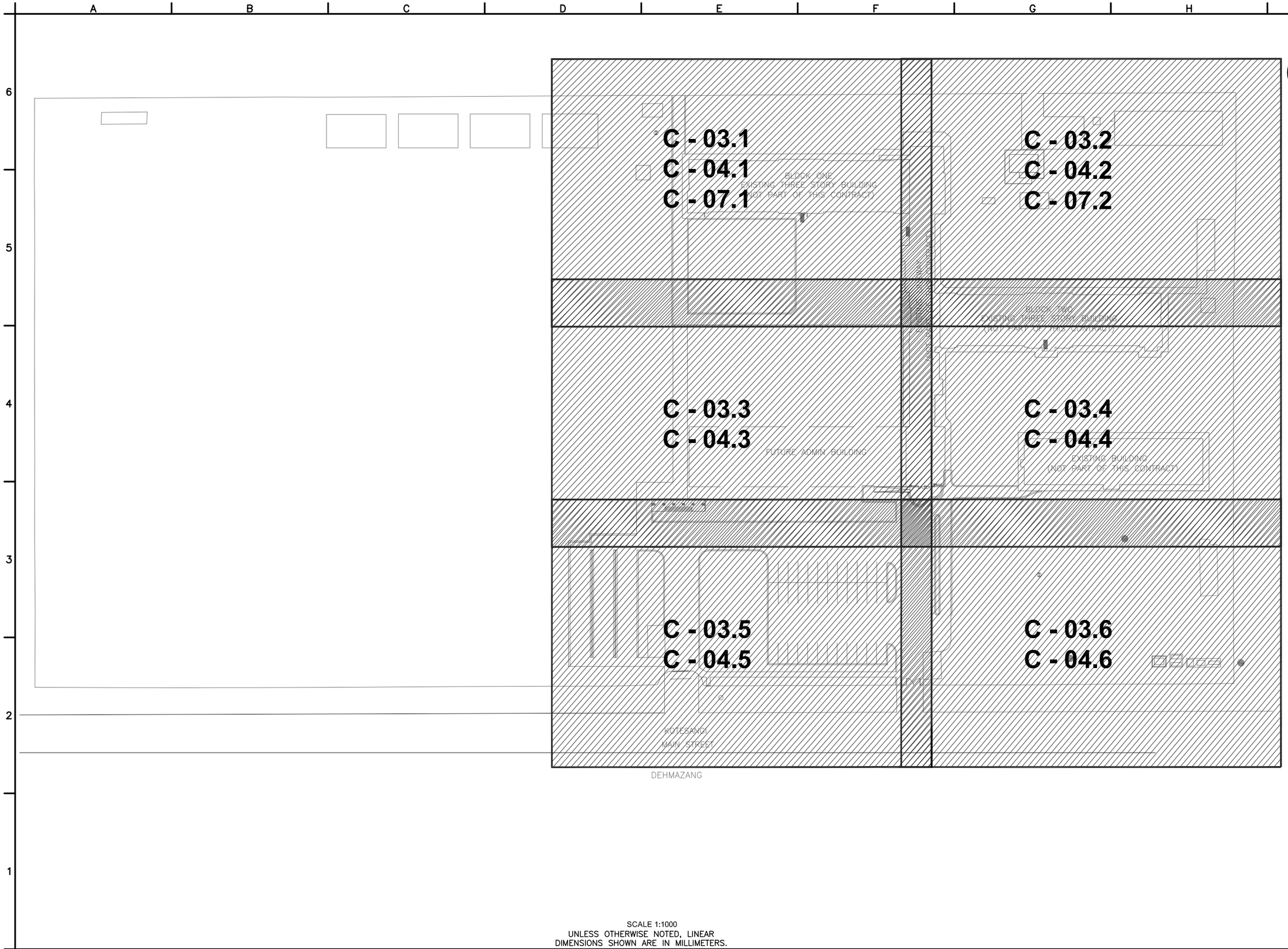

SCALE 1:1000
UNLESS OTHERWISE NOTED, LINEAR
DIMENSIONS SHOWN ARE IN MILLIMETERS.

BID DOCUMENT SUBMITTAL

This project was made possible by the United States Agency for International Development and the generous support of the American People through USAID Global Architecture and Engineering IQC Contracts.

SYMB	DESCRIPTION	DATE	APR
	BID DOCUMENT SUBMITTAL	09/09/10	BRG
	100% DESIGN SUBMITTAL	07/06/10	BRG
	95% DESIGN SUBMITTAL	06/03/10	NJB

DESIGNED BY: JLH | DRN BY: JLH | CHK BY: NJB | DATE: 09/09/2010

SUBMITTED BY: TETRA TECH

FILE NO.: LT0005-C-02

USAID
FROM THE AMERICAN PEOPLE

A E S P

USAID – OIEE
GHAZI BOYS HIGH SCHOOL
SITE KEY PLAN

SHEET REFERENCE NUMBER:
LT0005
C–02.1

Z:\127-1298-10001\Work Orders\WO-LT\WO-LT-0005 GBHS Utility Design\CAD\Conceptual\Civil\DWG\WOLT05-C-002.1.dwg 9/8/2010 9:45:40 AM Harris, Jessica

Z:\127-1298-10001\Work Orders\WO-LT\WO-LT-0005 GBHS Utility Design\CAD\Conceptual\Civil\DWG\WOLT05-C-002.2.dwg 9/8/2010 9:48:43 AM Harris, Jessica

SEE NOTE 2

SEE NOTE 1

SEE NOTE 2

BUILDINGS TO BE DEMOLISHED (SEE NOTE 3)

SEE NOTE 2

SEE NOTE 1

BLOCK ONE
EXISTING THREE STORY BUILDING
(NOT PART OF THIS CONTRACT)

EXISTING LINKWAY
(NOT PART OF THIS CONTRACT)

BLOCK TWO
EXISTING THREE STORY BUILDING
(NOT PART OF THIS CONTRACT)

FUTURE ADMIN BUILDING

EXISTING BUILDING
(NOT PART OF THIS CONTRACT)

REMOVE EXISTING ABANDONED CONCRETE FOUNDATION AND BUILDING

KOTESANGI
MAIN STREET

DEHMAZANG

NOTES:

1. UNOPS STRUCTURES THAT WILL NEED TO BE RELOCATED ON SITE BASED ON THE UTILITY DESIGN. REMOVAL AND/OR RELOCATION TO BE THE RESPONSIBILITY OF UNOPS.

2. CONTRACTOR STRUCTURES THAT MAY OR MAY NOT REMAIN DEPENDING ON CONTRACTOR SELECTION FOR UTILITIES CONTRACT. CONTRACTOR STRUCTURES MAY NEED TO BE RELOCATED BASED ON THE UTILITY DESIGN. REMOVAL AND/OR RELOCATION TO BE THE RESPONSIBILITY OF THE CONTRACTOR.

3. EXISTING SCHOOL STRUCTURES TO BE REMOVED. SCHEDULE FOR REMOVAL TO BE COORDINATED DURING CONSTRUCTION.

SCALE 1:1000
UNLESS OTHERWISE NOTED, LINEAR DIMENSIONS SHOWN ARE IN MILLIMETERS.

0 25 50
1:1000

N

BID DOCUMENT SUBMITTAL

SYMB	DESCRIPTION	DATE	APR
	BID DOCUMENT SUBMITTAL	09/09/10	BRG
	NEW DRAWING, BID DOCUMENT	09/09/10	BRG
	100% DESIGN SUBMITTAL	07/06/10	BRG
	95% DESIGN SUBMITTAL	06/03/10	NJB

This project was made possible by the United States Agency for International Development and the generous support of the American People through USAID Global Architecture and Engineering IQC Contracts.

DESIGNED BY: JLH
DWN BY: JLH
CHK BY: NJB
DATE: 09/09/2010
SUBMITTED BY: TETRA TECH
FILE NO.: LT0005-C-02

USAID FROM THE AMERICAN PEOPLE

AESP

USAID – OIEE
GHAZI BOYS HIGH SCHOOL
SITE DEMOLITION PLAN

SHEET REFERENCE NUMBER:
LT0005
C-02.2

P:\1298\Work Orders\WO-LT\WO-LT-0005 GBHS Utility Design\CAD\Conceptual\Civil\DWG\WOLT05-C-003.1 to 003.6 latest.dwg 12/22/2010 1:46:15 PM Harris, Jessica

EXISTING GATE TO REMAIN FOR PEDESTRIAN ACCESS

EXISTING GUARDHOUSE (TO REMAIN)

EXISTING PERIMETER WALL (TYP.)

1500

2710

1000

CHAINLINK FENCE (SEE C-05.3) (TYP.)

GREYWATER TANK (SEE C-13 TO C-15)

EXISTING TUBE WELL (TO REMAIN)

EXPANSION JOINT (TYP.)

BLOCK ONE
EXISTING THREE STORY BUILDING
(NOT PART OF THIS CONTRACT)
FFE=1820.76

MATCHLINE SHEET C-03.2

4700

1000

7000

RADIUS PT. (R=3000)

RADIUS PT. (R=2850)

REMOVE AND REPLACE EXISTING CONCRETE IN THIS SECTION. MATCH TO EXISTING GRADES. (SEE C-05.1)

4m

VCC

1376

CONTRACTION JOINT (TYP.) (SEE DWG C-05.4)

4500 (TYP.)

26.6m

900 SM CONCRETE ASSEMBLY AREA (SEE SIDEWALK DETAIL C-05.1)

30.3m

26.6m

CONSTRUCTION JOINT (TYP.) (SEE DWG C-05.4)

EXPANSION JOINT (TYP.)

MATCHLINE SHEET C-03.3

4500 (TYP.)

3000

VCC

3m

EXPANSION JOINT (TYP.) (SEE DWG C-05.4)

MATCH EXISTING CONCRETE

MATCHLINE SHEET C-03.1
EXISTING LINKWAY
(NOT PART OF THIS CONTRACT)

SCALE 1:300
UNLESS OTHERWISE NOTED, LINEAR DIMENSIONS SHOWN ARE IN MILLIMETERS.

5 0 5 10
1:300

N

ADDENDUM 2 SUBMITTAL

SYMB	DESCRIPTION	DATE	APR
4	WIDENED SIDEWALK FOR ENTRANCE EX. GATE	12/22/10	BRG
3	MOVED GW TANK TO MISS EXISTING WELL	12/22/10	BRG
2	CONTROL JOINTS FOR CONCRETE	11/01/10	BRG
	BID DOCUMENT SUBMITTAL	09/09/10	BRG
	100% DESIGN SUBMITTAL	07/06/10	BRG
	95% DESIGN SUBMITTAL	06/03/10	NJB

This project was made possible by the United States Agency for International Development and the generous support of the American People through USAID Global Architecture and Engineering IQC Contracts.

DESIGNED BY: JLH | DATE: 12/22/2010
DWN BY: JLH | SUBMITTED BY: TETRA TECH
CHK BY: NJB | FILE NO.: LT0005-C-03

USAID FROM THE AMERICAN PEOPLE

A E S P

USAID – OIEE
GHAZI BOYS HIGH SCHOOL
SITE LAYOUT PLAN
SHEET 1 OF 6

SHEET REFERENCE NUMBER:
LT0005
C-03.1

P:\1298\Work Orders\WO-LT\WO-LT-0005 GBHS Utility Design\CAD\Conceptual\Civil\DWG\WOLT05-C-003.1 to 003.6.dwg 12/22/2010 10:17:30 AM Harris, Jessica

EXISTING GATE TO REMAIN FOR MAINTENANCE VEHICLE ACCESS

INTERIOR FACE OF PERIMETER WALL (TYP.)

EXISTING UNOPS BLDG

GRAVEL MAINTENANCE LOT

PUMP STATION (SEE C-16 to C-18)

6738

5000 (APPROX.)

4000

EXISTING UNOPS BLDG

WWTP SLAB (SEE C-19 to C-21)

3702

EXISTING UNOPS BLDG

10m

CHAINLINK FENCE (SEE C-5.3) (TYP.)

PUMP HOUSE (SEE C-22, A-01 to A-09, S-01 to S-06, M-01, E-10)

9325

9000

4000

6000

CENTER OF WELL

1950

POTABLE WATER TANK (SEE C-10, 11, 12)

12.71m

TUBE WELL (SEE C-09.1 to C-09.3)

3747

EXISTING UNOPS BLDG

EXISTING UNOPS BLDG

22.4m

EXISTING LATRINE (TO REMAIN)

MATCH EXISTING CONCRETE

THIS SIDEWALK TO HAVE NO CURBS ALONG EDGES

1290

1000

3677

GREYWATER TANK

1500

CHAINLINK FENCE

MATCHLINE SHEET C-03.1

MATCHLINE SHEET C-03.4

EXISTING LINKWAY
(NOT PART OF THIS CONTRACT)

FFE=1820.76

BLOCK TWO
EXISTING THREE STORY BUILDING
(NOT PART OF THIS CONTRACT)

SCALE 1:300
UNLESS OTHERWISE NOTED, LINEAR
DIMENSIONS SHOWN ARE IN MILLIMETERS.

5 0 5 10
1:300

N

ADDENDUM 2 SUBMITTAL

SYMB	DESCRIPTION	DATE	
4	MOVED WATER RESERVOIR AND PUMP HOUSE	12/22/10	BRG
3	BID DOCUMENT SUBMITTAL	09/09/10	BRG
2	WWTP MOVEMENT/FENCE REALIGNMENT	09/09/10	BRG
1	100% DESIGN SUBMITTAL	07/06/10	BRG
A	95% DESIGN SUBMITTAL	06/03/10	NJB

This project was made possible by the United States Agency for International Development and the generous support of the American People through USAID Global Architecture and Engineering IQC Contracts.

DESIGNED BY: JLH | DRAWN BY: JLH | CHK BY: NJB | DATE: 12/22/2010 | SUBMITTED BY: TETRA TECH | FILE NO.: LT0005-C-03

USAID FROM THE AMERICAN PEOPLE

AESP

USAID – OIEE
GHAZI BOYS HIGH SCHOOL
SITE LAYOUT PLAN
SHEET 2 OF 6

SHEET REFERENCE NUMBER:
LT0005
C-03.2

P:\1298\Work Orders\WO-LT\WO-LT-0005 GBHS Utility Design\CAD\Conceptual\Civil\DWG\WOLT05-C-003.1 to 003.6.dwg 12/22/2010 10:17:53 AM Harris, Jessica

MATCHLINE SHEET C-03.1

EXPANSION JOINT (TYP.)

EXPANSION JOINT (TYP.) (SEE DWG C-05.4)

MATCH EXISTING CONCRETE

VCC

3m

4500 (TYP.)

3000

EXISTING LINKWAY (NOT PART OF THIS CON

EXISTING PATHWAY (TO REMAIN)

MATCHLINE SHEET C-03.4

NEW ADMIN BUILDING

POINT OF TRANSITION FROM CONCRETE DRIVEWAY TO CONCRETE SIDEWALK

CONCRETE BICYCLE LOT (SEE C-03-03.5)

18900

4219

3037

VCC

MATCHLINE SHEET C-03.5

END OF CURB

EQ

4554

1557

CONTRACTION JOINT (TYP.) (SEE DWG C-05.4)

CONSTRUCTION JOINT (SEE DWG C-05.4)

CONCRETE PAVEMENT TO EXTEND TO THE EXISTING STEPS

EXISTING STEPS

6.2m

END OF CURB

SCALE 1:300

UNLESS OTHERWISE NOTED, LINEAR DIMENSIONS SHOWN ARE IN MILLIMETERS.

5 0 5 10

1:300

ADDENDUM 2 SUBMITTAL

SYMB	DESCRIPTION	DATE	APR
4	MODIFIED CONTROL JOINTS & BICYCLE PARKING AREA	12/22/10	BRG
3	CONTROL JOINTS FOR CONCRETE	11/01/10	BRG
2	SIDEWALK MODS FOR NEW ADMIN BUILDING	11/01/10	BRG
	BID DOCUMENT SUBMITTAL	09/09/10	BRG
	100% DESIGN SUBMITTAL	07/06/10	BRG
	95% DESIGN SUBMITTAL	06/03/10	NJB

This project was made possible by the United States Agency for International Development and the generous support of the American People through USAID Global Architecture and Engineering IQC Contracts.

DESIGNED BY: JLH | DATE: 12/22/2010
DWN BY: JLH | SUBMITTED BY: TETRA TECH
CHK BY: NJB | FILE NO.: LT0005-C-03

USAID FROM THE AMERICAN PEOPLE

AESP

USAID - OIEE
GHAZI BOYS HIGH SCHOOL
SITE LAYOUT PLAN
SHEET 3 OF 6

SHEET REFERENCE NUMBER:
LT0005 C-03.3

P:\1298\Work Orders\WO-LT\WO-LT-0005 GBHS Utility Design\CAD\Conceptual\Civil\DWG\WOLT05-C-003.1 to 003.6.dwg 12/22/2010 10:35:23 AM Harris, Jessica

EXISTING LINKWAY
(NOT PART OF THIS CON

MATCHLINE SHEET C-03.3

MATCHLINE SHEET C-03.2

FFE=1820.76

BLOCK TWO
EXISTING THREE STORY BUILDING
(NOT PART OF THIS CONTRACT)

FFE=1820.76

1290
1000
3677
1500
GREYWATER TANK
CHAINLINK FENCE

INTERIOR FACE OF
PERIMETER WALL

CONNECT PROPOSED
SIDEWALK TO EXISTING
CONCRETE SIDEWALK

3125

EXISTING
STEPS

4514

3m

EXPANSION JOINT
(TYP.) (SEE DWG
C-05.1)

CONNECT PROPOSED
SIDEWALK TO EXISTING
CONCRETE BUILDING APRON

RADIUS PT. (R=1500)

2822

4500

RADIUS PT. (R=765)

3.2m

FOR DIMENSIONS
BETWEEN CONCRETE
JOINTS, SEE DWG
C-03.5

EXISTING BUILDING
(NOT PART OF THIS CONTRACT)

MATCHLINE SHEET C-03.6

EXISTING WATER TAP
(TO REMAIN)

SCALE 1:300
UNLESS OTHERWISE NOTED, LINEAR
DIMENSIONS SHOWN ARE IN MILLIMETERS.

5 0 5 10
1:300

N

ADDENDUM 2 SUBMITTAL

SYMB	DESCRIPTION	DATE	APR
4	MODIFIED CONTROL JOINTS FOR CONCRETE	12/22/10	BRG
3	CONTROL JOINTS FOR CONCRETE	11/01/10	BRG
2	SIDEWALK MODS FOR NEW ADMIN BUILDING	11/01/10	BRG
	BID DOCUMENT SUBMITTAL	09/09/10	BRG
	100% DESIGN SUBMITTAL	07/06/10	BRG
	95% DESIGN SUBMITTAL	06/03/10	NJB

This project was made possible by the United States Agency for International Development and the generous support of the American People through USAID Global Architecture and Engineering IQC Contracts.

DESIGNED BY:	DATE:
JLH	12/22/2010
DWN BY:	SUBMITTED BY:
JLH	TETRA TECH
CHK BY:	FILE NO.:
NJB	LT0005-C-03

USAID
FROM THE AMERICAN PEOPLE

A E S P

USAID - OIEE
GHAZI BOYS HIGH SCHOOL
SITE LAYOUT PLAN
SHEET 4 OF 6

SHEET REFERENCE NUMBER:
LT0005
C-03.4

P:\1298\Work Orders\WO-LT\WO-LT-0005 GBHS Utility Design\CAD\Conceptual\Civil\DWG\WOLT05-C-003.1 to 003.6.dwg 12/22/2010 12:59:50 PM Harris, Jessica

POINT OF TRANSITION FROM CONCRETE DRIVEWAY TO CONCRETE SIDEWALK

CONCRETE BICYCLE LOT (SEE C-03-03.5)

18.9m

4219

3037

MATCHLINE SHEET C-03.3

CONTRACTION JOINT (TYP.) (SEE DWG C-05.4)

CONSTRUCTION JOINT (SEE DWG C-05.4)

CONCRETE PAVEMENT TO EXTEND TO THE EXISTING STEPS

2822

END OF CURB

6.2m

VCC

4632 4632 4632 4632 4632

4554

1557

EQ

8688

RADIUS PT. (R=2700)

RADIUS PT. (R=2700)

RADIUS PT. (R=2700)

2.8m

4500

10.5m

11295

40.5m

EXISTING GARDEN TO BE PRESERVED

EXISTING GARDEN TO BE PRESERVED

SEE DWG C-05.4 FOR PARKING LAYOUT IN THIS AREA

30.5m

32909

3732 3732

EXISTING GUARDHOUSE (TO REMAIN)

REMOVE AND REPLACE EXISTING CONCRETE DRIVE (SEE CONCRETE DRIVE DETAIL, DWG C-05.1)

CONCRETE PAVEMENT (SEE C-05.1) (TYP.)

11236

8.46m

AS REQUIRED

5972

2586

7.3m

19.5m

7293

30.7m

BICYCLE RACK (TYP.) (SEE DETAIL SHEET C-05.1)

POINT OF TRANSITION FROM CONCRETE DRIVEWAY TO CONCRETE SIDEWALK

INTERIOR FACE OF PERIMETER WALL

EXISTING GATE (TO REMAIN)

EXISTING UTILITY POLE

EXISTING SIDEWALK TO REMAIN

EXISTING GATE (TO REMAIN)

MATCHLINE SHEET C-03.6

KOTESANGI

MAIN STREET

SCALE 1:300
UNLESS OTHERWISE NOTED, LINEAR DIMENSIONS SHOWN ARE IN MILLIMETERS.

5 0 5 10
1:300

N

ADDENDUM 2 SUBMITTAL

SYMB	DESCRIPTION	DATE	APR
4	MODIFIED CONTROL JOINTS & BICYCLE PARKING AREA	12/22/10	BRG
3	CONTROL JOINTS FOR CONCRETE SIDEWALK MODS FOR NEW ADMIN BUILDING	11/01/10	BRG
2	BID DOCUMENT SUBMITTAL	09/09/10	BRG
	100% DESIGN SUBMITTAL	07/06/10	BRG
	95% DESIGN SUBMITTAL	06/03/10	NJB

DESIGNED BY: JLH
DRN BY: JLH
CHK BY: NJB
DATE: 12/22/2010
SUBMITTED BY: TETRA TECH
FILE NO.: LT0005-C-03

This project was made possible by the United States Agency for International Development and the generous support of the American People through USAID Global Architecture and Engineering IQC Contracts.

USAID FROM THE AMERICAN PEOPLE

AESP

USAID - OIEE
GHAZI BOYS HIGH SCHOOL
SITE LAYOUT PLAN
SHEET 5 OF 6

SHEET REFERENCE NUMBER:
LT0005
C-03.5

P:\1298\Work Orders\WO-LT\WO-LT-0005 GBHS Utility Design\CAD\Conceptual\Civil\DWG\WOLT05-C-003.1 to 003.6.dwg 12/22/2010 1:04:18 PM Harris, Jessica

EXPANSION JOINT (TYP.) (SEE DWG C-05.1)

CONNECT PROPOSED SIDEWALK TO EXISTING CONCRETE BUILDING APRON

RADIUS PT. (R=1200)

MATCHLINE SHEET C-03.4

RADIUS PT. (R=462)

FOR DIMENSIONS BETWEEN CONCRETE JOINTS, SEE DWG C-03.5

CONTRACTION JOINT (TYP.) (SEE DWG C-05.4)

CONSTRUCTION JOINT (TYP.) (SEE DWG C-05.4)

CONCRETE PARKING AREA, SEE DWG C-05.4

RADIUS PT. (R=462)

RADIUS PT. (R=2800)

EXISTING GUARDHOUSE (TO REMAIN)

EXISTING GATE (TO REMAIN)

MATCHLINE SHEET C-03.5

EXISTING WATER TAP (TO REMAIN)

EXISTING TUBE WELL (TO REMAIN)

EXISTING LATRINE (TO REMAIN)

FOR ENLARGED ELECTRICAL SITE PLAN (SEE E-03 TO E-04)

FUEL TANK (SEE E-08)

GENERATORS (SEE E-09)

400 KVA USS (SEE E-03.1)

EXISTING WATER TAP (TO REMAIN)

EXISTING WATER TAP (TO REMAIN)

SCALE 1:300
UNLESS OTHERWISE NOTED, LINEAR DIMENSIONS SHOWN ARE IN MILLIMETERS.

5 0 5 10
1:300

ADDENDUM 2 SUBMITTAL

SYMB	DESCRIPTION	DATE	APR
4	MODIFIED CONTROL JOINTS FOR CONCRETE	12/22/10	BRG
3	CONTROL JOINTS FOR CONCRETE	11/01/10	BRG
2	SIDEWALK MODS FOR NEW ADMIN BUILDING	11/01/10	BRG
1	BID DOCUMENT SUBMITTAL	09/09/10	BRG
	ELIMINATION OF CURB	09/09/10	BRG
	100% DESIGN SUBMITTAL	07/06/10	BRG
	95% DESIGN SUBMITTAL	06/03/10	NJB

This project was made possible by the United States Agency for International Development and the generous support of the American People through USAID Global Architecture and Engineering IQC Contracts.

DESIGNED BY: JLH
DRN BY: JLH
CHK BY: NJB
DATE: 12/22/2010
SUBMITTED BY: TETRA TECH
FILE NO.: LT0005-C-03

USAID FROM THE AMERICAN PEOPLE

AESP

USAID - OIEE
GHAZI BOYS HIGH SCHOOL
SITE LAYOUT PLAN
SHEET 6 OF 6

SHEET REFERENCE NUMBER:
LT0005 C-03.6

P:\1298\Work Orders\WO-LT\WO-LT-0005 GBHS Utility Design\CAD\Conceptual\Civil\DWG\LT0005-C-04\02-Civil\LT0005-C-04.dwg 12/22/2010 3:03:13 PM Harris, Jessica

A B C D E F G H

6 5 4 3 2 1

MEET EXISTING GRADE AT GATE

EXISTING GUARDHOUSE

EXISTING GATE TO REMAIN FOR PEDESTRIAN ACCESS

EXISTING PERIMETER WALL (TYP.)

EXISTING K-SPAN BUILDINGS (4)

CHAINLINK FENCE (SEE C-05.3) (TYP.)

GREYWATER TANK (SEE C-13 TO C-15)

G.W. TANK TOP OF CONCRETE ROOF SLAB ELEV. = 1819.00

EXISTING TUBE WELL

1819.80 (HATCH)

1820.04 WALKWAY

1820.01

1820.24 EXISTING APRON

1819.97

1819.95

1819.93

1819.90

1820.00

1820.20

1819.80

1819.60

1819.40

BLOCK ONE
EXISTING THREE STORY BUILDING
(NOT PART OF THIS CONTRACT)
FFE=1820.76

SEE NOTE 3 (TYP.)

1820.05

VCC

1820.24 EXISTING APRON

1820.24 EXISTING APRON

1820.24 EXISTING APRON

MATCH EXISTING CONCRETE, TYP

REMOVE AND REPLACE EXISTING CONCRETE IN THIS SECTION. MATCH TO EXISTING GRADES.

1820.00 (EXIST)

1820.00

1819.80

200mm CORR HDPE PIPE I.E.=1819.60

SEE NOTE 3 (TYP.)

1820.02 LOW POINT (SEE NOTE 4)

900 SM CONCRETE ASSEMBLY AREA

1820.31 EXISTING APRON

1820.31 EXISTING APRON

1820.31 EXISTING APRON

TIE INTO EXISTING GRADING (NOT SHOWN ON PLAN)

200mm CORR HDPE PIPE I.E.=1819.50 (SEE C-07.1 AND C-07.2 FOR FURTHER PIPE DESCRIPTION)

Provide (3) 50mm SCH 80 PVC PIPE OPENINGS AT BASE OF CURB, SPACED 1000mm APART, CENTERED ON THE PVT. OPENINGS ARE TO BE FLUSH WITH SURFACE OF SIDEWALK. (SEE C-05.1)

MATCH EXISTING CONCRETE

1820.08

1820.19

MATCHLINE SHEET C-04.3

MATCHLINE SHEET C-04.2

G LINKWAY (NOT PART OF THIS CONTRACT)

NOTES:

1. ALL DIMENSIONS ARE FROM FACE OF CURB UNLESS OTHERWISE NOTED.
2. FINISHED GRADES ARE SHOWN AT BASE OF CURB UNLESS OTHERWISE NOTED.
3. PROVIDE 50mm SCH 80 PVC PIPE OPENINGS AT THE BASE OF CURB, INVERT OF PIPE FLUSH WITH SIDEWALK. OPENINGS ARE TO BE LOCATED EVERY 5m (SEE DETAIL C-05.1).
4. LOCATE A 50mm PVC PIPE THROUGH THE CURB AT ALL LOW POINTS.

SCALE 1:300

UNLESS OTHERWISE NOTED, LINEAR DIMENSIONS SHOWN ARE IN MILLIMETERS.

5 0 5 10
1:300

ADDENDUM 2 SUBMITTAL

SYMB	DESCRIPTION	DATE	
4	MOVED GW TANK TO MISS EXISTING WELL	12/22/10	BRG
3	BID DOCUMENT SUBMITTAL	09/09/10	BRG
2	REVISED DRAINAGE PLAN	09/09/10	BRG
1	100% DESIGN SUBMITTAL	07/06/10	BRG
0	95% DESIGN SUBMITTAL	06/03/10	NJB

This project was made possible by the United States Agency for International Development and the generous support of the American People through USAID Global Architecture and Engineering IQC Contracts.

DESIGNED BY: JLH
DATE: 12/22/2010
DWN BY: JLH
SUBMITTED BY: TETRA TECH
CHK BY: BRG
FILE NO.: LT0005-C-04

USAID FROM THE AMERICAN PEOPLE

AESP

USAID - OIEE
GHAZI BOYS HIGH SCHOOL
GRADING AND DRAINAGE PLAN
SHEET 1 OF 6

SHEET REFERENCE NUMBER:
LT0005
C-04.1

P:\1298\Work Orders\WO-LT\WO-LT-0005 GBHS Utility Design\CAD\Conceptual\Civil\DWG\LT0005-C-04\02-Civil\LT0005-C-04.dwg 12/22/2010 3:03:56 PM Harris, Jessica

MEET EXISTING GRADE AT GATE

EXISTING GATE TO REMAIN FOR MAINTENANCE VEHICLE ACCESS

PUMP STATION (SEE C-16 to C-18)

1819.85

1819.60

1819.80

GRAVEL MAINTENANCE LOT (200 GRAVEL DEPTH)

WWTP (SEE C-19 to C-21)
TOP OF CONCRETE ELEV = 1818.20

1820.40 (HIGH PT)

1820.24 EXISTING APRON

1820.24 EXISTING APRON

1819.90

1820.18

1820.19

ELEV 1820.21 TYP, AROUND PERIMETER OF STRUCTURE

PUMP HOUSE (SEE C-22, A-01 to A-09, S-01 to S-06, M-01, E-10)
FFE=1820.50

1820.20

1820.00

CHAINLINK FENCE (SEE C-5.3) (TYP.)

1819.80

1819.60

1819.40

1819.20

1819.00

POTABLE WATER TANK (SEE C-10 to C-12)
TOP OF CONCRETE ELEV. = 1821.04

SPLASH PAD FOR TANK OVERFLOW

1820.20

TUBE WELL (SEE C-09.1 to C-09.3)

1820.24 EXISTING APRON

BM-2
N 3818943.261
E 513481.864
ELEV.= 1819.321

EXISTING LATRINE (TO REMAIN)

1819.60

1819.80

1820.00

1820.20

CONTRACTOR TO ADJUST RAILINGS CONSISTENT WITH PROPOSED WALKWAY ELEVATION

MATCH EXISTING CONCRETE

1820.24 EXISTING APRON

1820.24 EXISTING APRON

1820.24 EXISTING APRON

1819.20

1819.20

GREYWATER TANK

CHAINLINK FENCE

1819.65 (HATCH)

G.W. TANK TOP OF CONCRETE ROOF SLAB ELEV. = 1818.85

1820.20

MATCHLINE SHEET C-04.1

MATCHLINE SHEET C-04.4

LINKWAY (NOT PART OF THIS CONTRACT)

BLOCK TWO
EXISTING THREE STORY BUILDING
(NOT PART OF THIS CONTRACT)
FFE=1820.76

NOTES:

1. ALL DIMENSIONS ARE FROM FACE OF CURB UNLESS OTHERWISE NOTED.
2. FINISHED GRADES ARE SHOWN AT BASE OF CURB UNLESS OTHERWISE NOTED.
3. PROVIDE 50mm SCH 80 PVC PIPE OPENINGS AT THE BASE OF CURB, INVERT OF PIPE FLUSH WITH SIDEWALK. OPENINGS ARE TO BE LOCATED EVERY 5m (SEE DETAIL C-05.1).
4. LOCATE A 50mm PVC PIPE THROUGH THE CURB AT ALL LOW POINTS.

SCALE 1:300
UNLESS OTHERWISE NOTED, LINEAR DIMENSIONS SHOWN ARE IN MILLIMETERS.

5 0 5 10
1:300

ADDENDUM 2 SUBMITTAL

This project was made possible by the United States Agency for International Development and the generous support of the American People through USAID Global Architecture and Engineering IQC Contracts.

SYMB	DESCRIPTION	DATE	APR
4	MOVED WATER RESERVOIR AND PUMP HOUSE	12/22/10	BRG
	BID DOCUMENT SUBMITTAL	09/09/10	BRG
	REVISED DRAINAGE PLAN	09/09/10	BRG
	100% DESIGN SUBMITTAL	07/06/10	BRG
	95% DESIGN SUBMITTAL	06/03/10	NJB

DESIGNED BY: JLH
DRN BY: JLH
CHK BY: BRG
DATE: 12/22/2010
SUBMITTED BY: TETRA TECH
FILE NO.: LT0005-C-04

USAID FROM THE AMERICAN PEOPLE

AESP

USAID – OIEE
GHAZI BOYS HIGH SCHOOL
GRADING AND DRAINAGE PLAN
SHEET 2 OF 6

SHEET REFERENCE NUMBER:
LT0005 C-04.2

P:\1298\Work Orders\WO-LT\WO-LT-0005 GBHS Utility Design\CAD\Conceptual\Civil\DWG\LT0005-C-04\02-Civil\LT0005-C-04.dwg 12/21/2010 3:18:48 PM Harris, Jessica

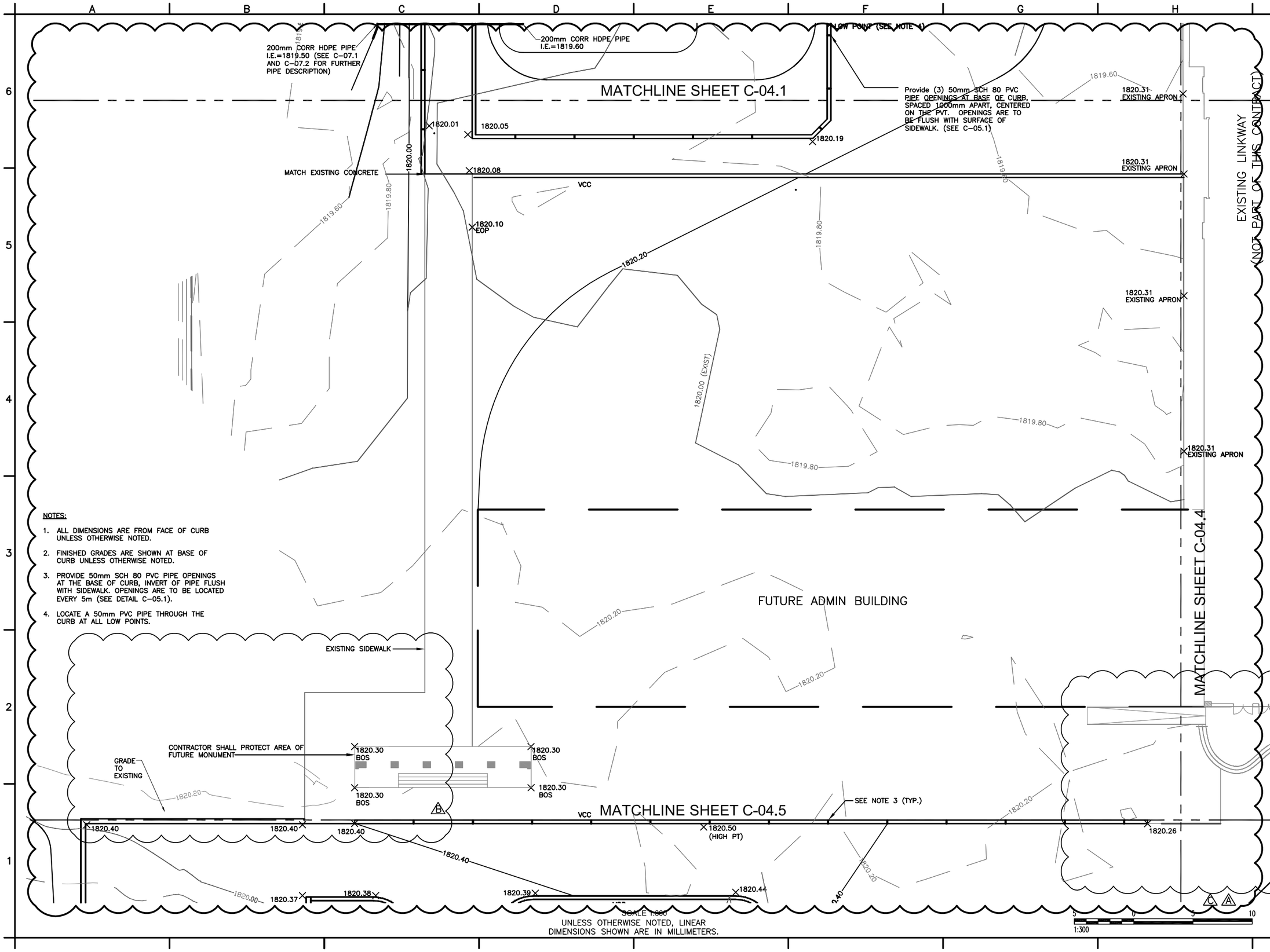

ADDENDUM 2 SUBMITTAL

SYMB	DESCRIPTION	DATE	
4	ADDED PERFORATED CURB	12/22/10	BRG
3	SIDEWALK MODS FOR NEW ADMIN BUILDING	11/01/10	BRG
2	BID DOCUMENT SUBMITTAL	09/09/10	BRG
	REVISED DRAINAGE PLAN	09/09/10	BRG
	100% DESIGN SUBMITTAL	07/06/10	BRG
	95% DESIGN SUBMITTAL	06/03/10	NJB

This project was made possible by the United States Agency for International Development and the generous support of the American People through USAID Global Architecture and Engineering IQC Contracts.

DESIGNED BY: JLH
DATE: 12/22/2010
DWN BY: JLH
SUBMITTED BY: TETRA TECH
CHK BY: BRG
FILE NO.: LT0005-C-04

USAID FROM THE AMERICAN PEOPLE

A E S P

USAID – OIEE
GHAZI BOYS HIGH SCHOOL
GRADING AND DRAINAGE PLAN
SHEET 3 OF 6

SHEET REFERENCE NUMBER:
LT0005
C-04.3

P:\1298\Work Orders\WO-LT\WO-LT-0005 GBHS Utility Design\CAD\Conceptual\Civil\DWG\LT0005-C-04\02-Civil\LT0005-C-04.dwg 11/6/2010 2:51:58 PM Harris, Jessica

MATCHLINE SHEET C-04.2

EXISTING LINKWAY
(NOT PART OF THIS CONTRACT)

MATCHLINE SHEET C-04.3

BLOCK TWO
EXISTING THREE STORY BUILDING
(NOT PART OF THIS CONTRACT)
FFE=1820.76

EXISTING BUILDING (NOT PART OF THIS CONTRACT)

MATCHLINE SHEET C-04.6

1820.20
1820.24 EXISTING APRON
1820.31 EXISTING APRON
1820.24
1820.00
1819.80
1819.60
1819.40
1819.20
1819.00
1820.00 (EXIST)
1820.26
1820.31
1819.65 (HATCH)
GREYWATER TANK
CHAINLINK FENCE
G.W. TANK TOP OF CONCRETE ROOF SLAB ELEV. = 1818.85

CONNECT PROPOSED SIDEWALK TO EXISTING CONCRETE BUILDING APRON

EXISTING WATER TAP (TO REMAIN)

NOTES:

1. ALL DIMENSIONS ARE FROM FACE OF CURB UNLESS OTHERWISE NOTED.
2. FINISHED GRADES ARE SHOWN AT BASE OF CURB UNLESS OTHERWISE NOTED.
3. PROVIDE 50mm SCH 80 PVC PIPE OPENINGS AT THE BASE OF CURB, INVERT OF PIPE FLUSH WITH SIDEWALK. OPENINGS ARE TO BE LOCATED EVERY 5m (SEE DETAIL C-05.1).
4. LOCATE A 50mm PVC PIPE THROUGH THE CURB AT ALL LOW POINTS.

SCALE 1:300
UNLESS OTHERWISE NOTED, LINEAR DIMENSIONS SHOWN ARE IN MILLIMETERS.

5 0 5 10
1:300

BID DOCUMENT SUBMITTAL

SYMB	DESCRIPTION	DATE	APR
4	SIDEWALK MODS FOR NEW ADMIN BUILDING	11/01/10	BRG
3	BID DOCUMENT SUBMITTAL	09/09/10	BRG
2	REVISED DRAINAGE PLAN	09/09/10	BRG
1	100% DESIGN SUBMITTAL	07/06/10	BRG
	95% DESIGN SUBMITTAL	06/03/10	NJB

This project was made possible by the United States Agency for International Development and the generous support of the American People through USAID Global Architecture and Engineering IQC Contracts.

DESIGNED BY: JLH
DWN BY: JLH
CHK BY: BRG
DATE: 11/01/2010
SUBMITTED BY: TETRA TECH
FILE NO.: LT0005-C-04

USAID FROM THE AMERICAN PEOPLE

AESP

USAID – OIEE
GHAZI BOYS HIGH SCHOOL
GRADING AND DRAINAGE PLAN
SHEET 4 OF 6

SHEET REFERENCE NUMBER:
LT0005
C-04.4

P:\1298\Work Orders\WO-LT\WO-LT-0005 GBHS Utility Design\CAD\Conceptual\Civil\DWG\LT0005-C-04\02-Civil\LT0005-C-04.dwg 12/21/2010 3:20:35 PM Harris, Jessica

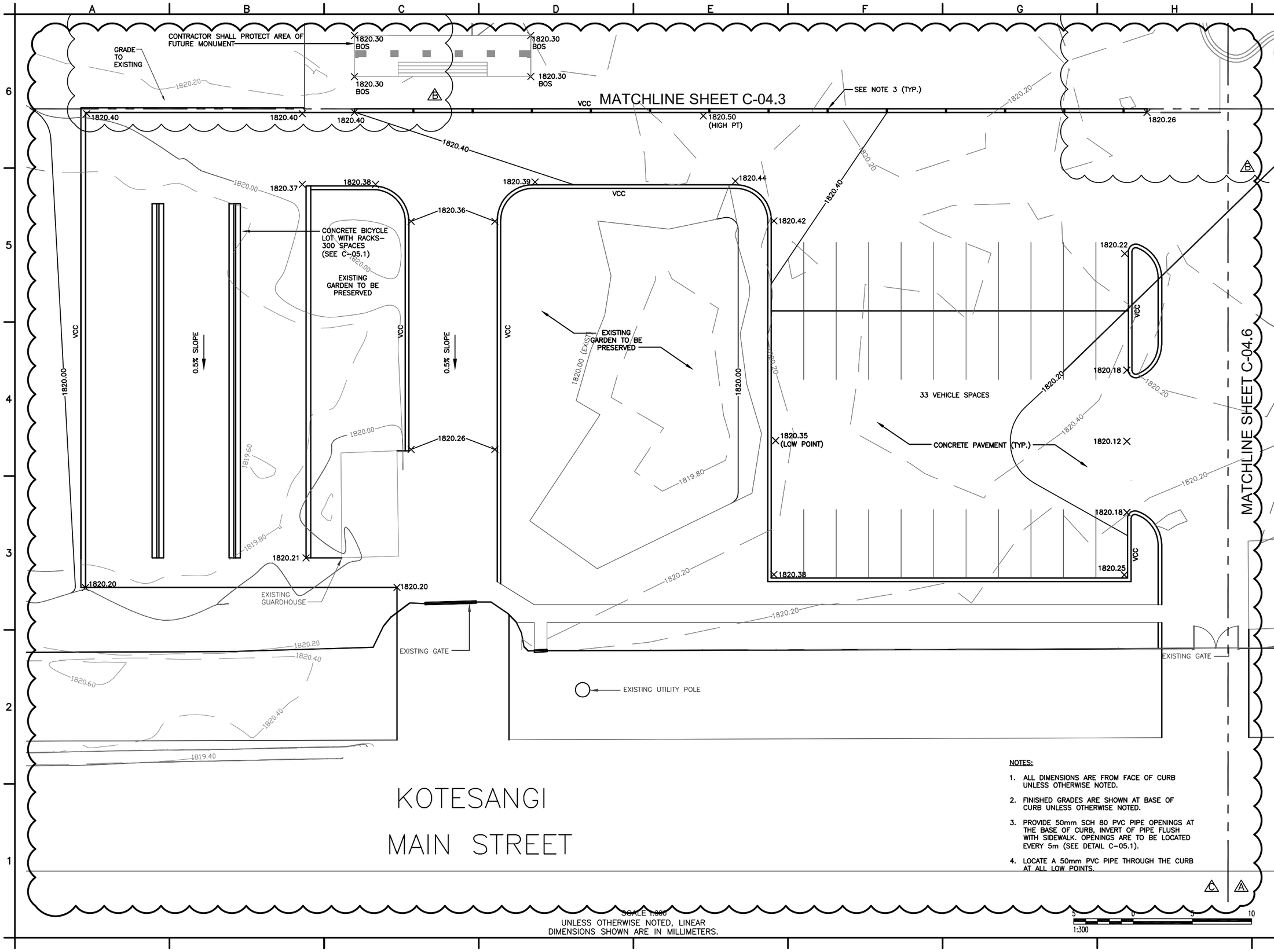

NOTES:

1. ALL DIMENSIONS ARE FROM FACE OF CURB UNLESS OTHERWISE NOTED.
2. FINISHED GRADES ARE SHOWN AT BASE OF CURB UNLESS OTHERWISE NOTED.
3. PROVIDE 50mm SCH 80 PVC PIPE OPENINGS AT THE BASE OF CURB, INVERT OF PIPE FLUSH WITH SIDEWALK. OPENINGS ARE TO BE LOCATED EVERY 5m (SEE DETAIL C–05.1).
4. LOCATE A 50mm PVC PIPE THROUGH THE CURB AT ALL LOW POINTS.

SCALE 1:300
UNLESS OTHERWISE NOTED, LINEAR DIMENSIONS SHOWN ARE IN MILLIMETERS.

5 0 5 10
1:300

ADDENDUM 2 SUBMITTAL

SYMB	DESCRIPTION	DATE	APR
4	MODIFIED GRADES IN BIKE PARKING AREA	12/22/10	BRG
3	SIDEWALK MODS FOR NEW ADMIN BUILDING	11/01/10	BRG
2	BID DOCUMENT SUBMITTAL	09/09/10	BRG
	REVISED DRAINAGE PLAN	09/09/10	BRG
	100% DESIGN SUBMITTAL	07/06/10	BRG
	95% DESIGN SUBMITTAL	06/03/10	NJB

This project was made possible by the United States Agency for International Development and the generous support of the American People through USAID Global Architecture and Engineering IQC Contracts.

DESIGNED BY: JLH
DRN BY: JLH
CHK BY: BRG
DATE: 12/22/2010
SUBMITTED BY: TETRA TECH
FILE NO.: LT0005–C–04

USAID FROM THE AMERICAN PEOPLE
AESP

USAID – OIEE
GHAZI BOYS HIGH SCHOOL
GRADING AND DRAINAGE PLAN
SHEET 5 OF 6

SHEET REFERENCE NUMBER:
LT0005
C–04.5

P:\1298\Work Orders\WO-LT\WO-LT-0005 GBHS Utility Design\CAD\Conceptual\Civil\DWG\LT0005-C-04\02-Civil\LT0005-C-04.dwg 12/21/2010 3:22:04 PM Harris, Jessica

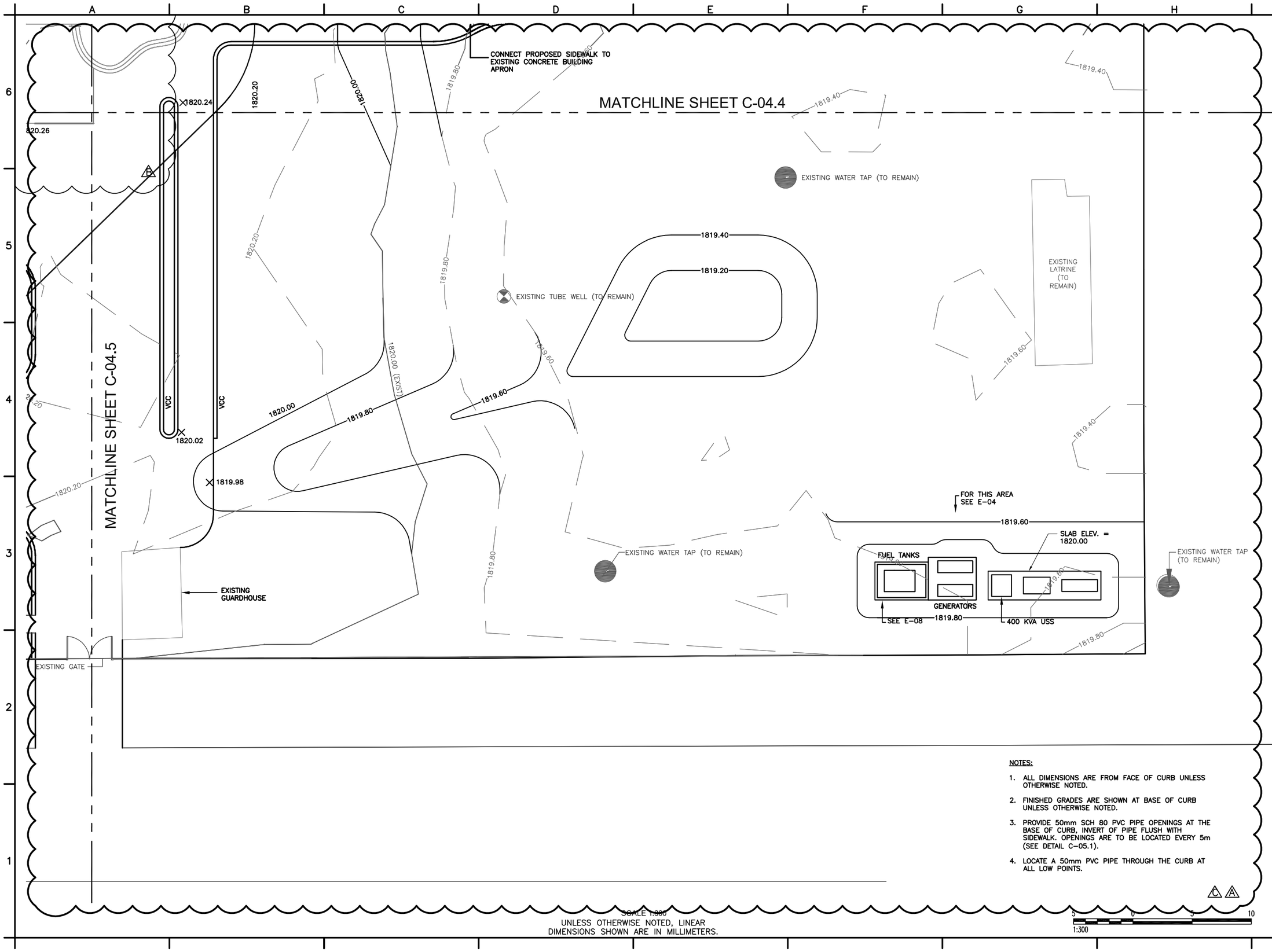

NOTES:

1. ALL DIMENSIONS ARE FROM FACE OF CURB UNLESS OTHERWISE NOTED.
2. FINISHED GRADES ARE SHOWN AT BASE OF CURB UNLESS OTHERWISE NOTED.
3. PROVIDE 50mm SCH 80 PVC PIPE OPENINGS AT THE BASE OF CURB, INVERT OF PIPE FLUSH WITH SIDEWALK. OPENINGS ARE TO BE LOCATED EVERY 5m (SEE DETAIL C-05.1).
4. LOCATE A 50mm PVC PIPE THROUGH THE CURB AT ALL LOW POINTS.

SCALE 1:300
UNLESS OTHERWISE NOTED, LINEAR DIMENSIONS SHOWN ARE IN MILLIMETERS.

5 0 5 10
1:300

ADDENDUM 2 SUBMITTAL

This project was made possible by the United States Agency for International Development and the generous support of the American People through USAID Global Architecture and Engineering IQC Contracts.

SYMB	DESCRIPTION	DATE	APR
3	MOD. GRADES FOR LOWER LINKWAY SIDEWALK	12/22/10	BRG
2	SIDEWALK MODS FOR NEW ADMIN BUILDING	11/01/10	BRG
1	BID DOCUMENT SUBMITTAL	09/09/10	BRG
	REVISED DRAINAGE PLAN	09/09/10	BRG
	100% DESIGN SUBMITTAL	07/06/10	BRG
	95% DESIGN SUBMITTAL	06/03/10	NJB

DESIGNED BY: JLH
DRWN BY: JLH
CHK BY: BRG
DATE: 12/22/2010
SUBMITTED BY: TETRA TECH
FILE NO.: LT0005-C-04

USAID FROM THE AMERICAN PEOPLE

AESP

USAID - OIEE
GHAZI BOYS HIGH SCHOOL
GRADING AND DRAINAGE PLAN
SHEET 6 OF 6

SHEET REFERENCE NUMBER:
LT0005 C-04.6

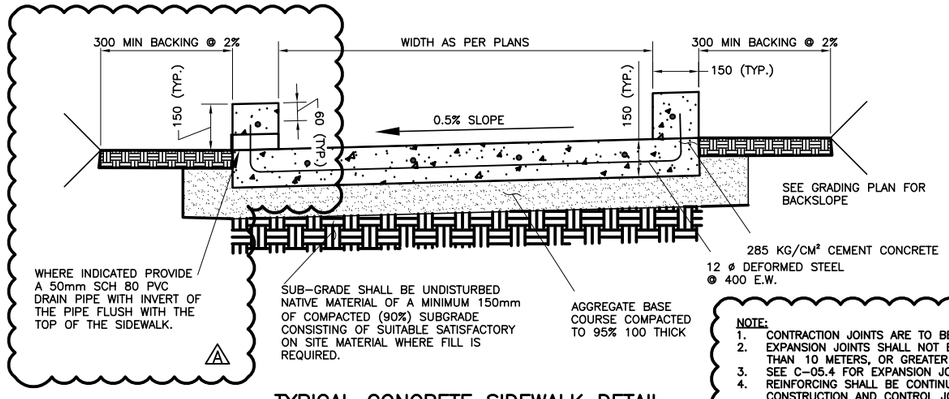

TYPICAL CONCRETE SIDEWALK DETAIL
SCALE 1:20

NOTE:
1. CONTRACTION JOINTS ARE TO BE AT 1500 INTERVALS.
2. EXPANSION JOINTS SHALL NOT BE SPACED LESS THAN 10 METERS, OR GREATER THAN 36 METERS.
3. SEE C-05.4 FOR EXPANSION JOINT DETAIL.
4. REINFORCING SHALL BE CONTINUOUS THROUGH CONSTRUCTION AND CONTROL JOINTS.

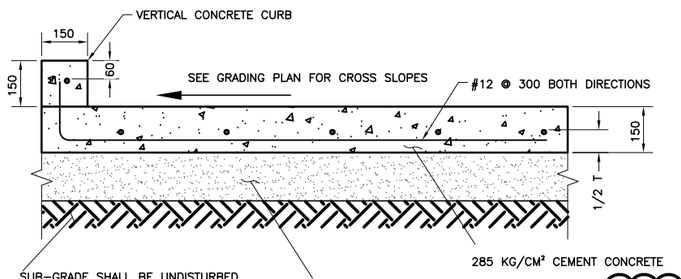

CONCRETE DRIVEWAY/PARKING LOT DETAIL
SCALE 1:20

NOTE:
1. CONTRACTION AND CONSTRUCTION JOINTS ARE TO BE LOCATED AS SHOWN IN THE DRAWINGS (SEE C-03.1 TO C-03.6)
2. SEE C-05.4 FOR CONTRACTION AND CONSTRUCTION JOINT DETAILS

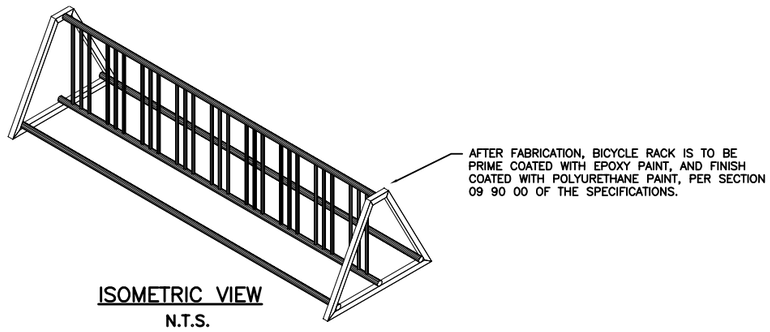

ISOMETRIC VIEW
N.T.S.

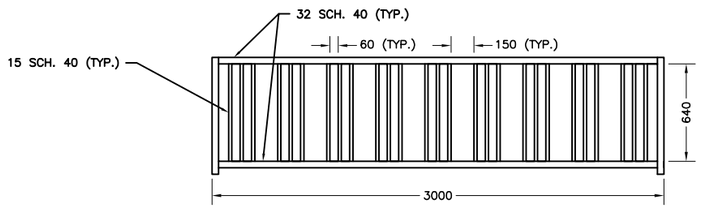

BICYCLE RACK DETAIL
SCALE 1:40

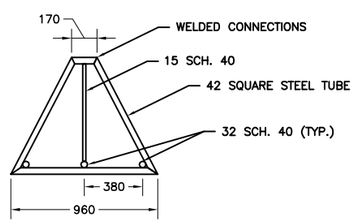

END DETAIL
SCALE 1:40

UNLESS OTHERWISE NOTED, LINEAR DIMENSIONS SHOWN ARE IN MILLIMETERS.

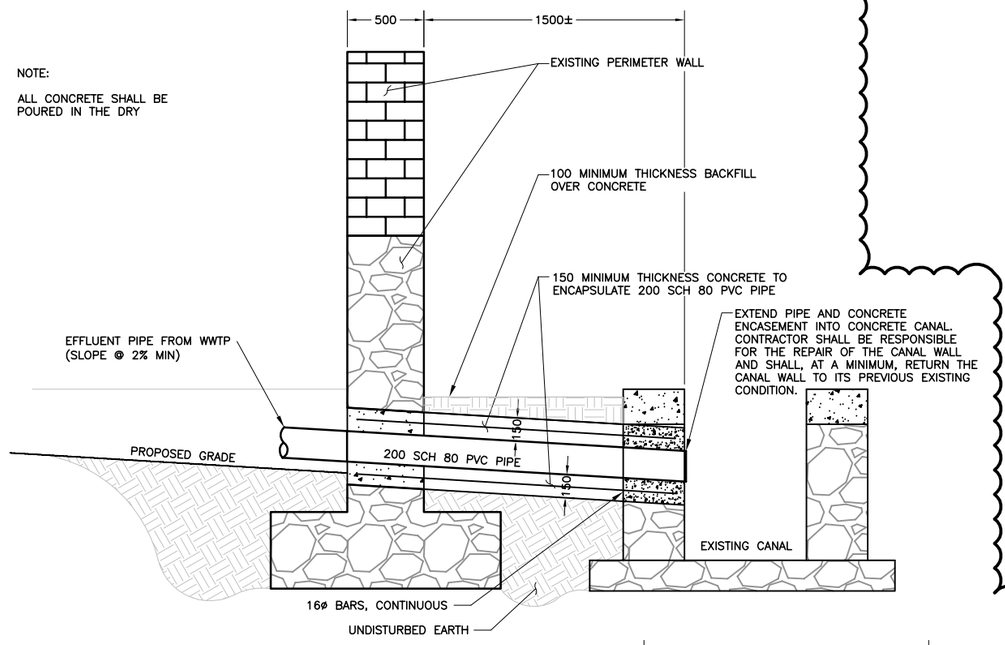

OUTLET FROM WWTP WALL PENETRATION DETAIL
SCALE 1:40

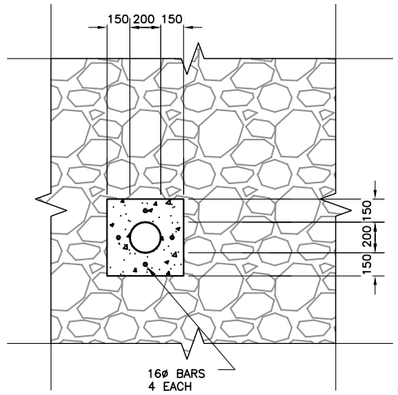

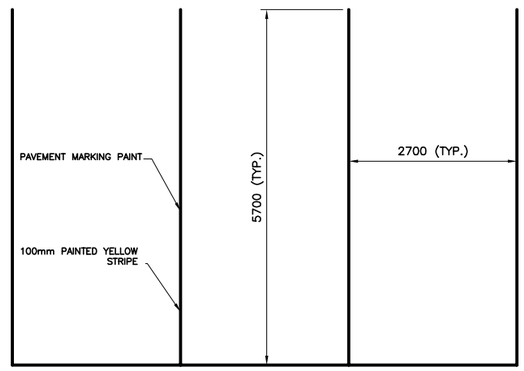

TYPICAL PARKING SPACE DETAIL
SCALE 1:100

This project was made possible by the United States Agency for International Development and the generous support of the American People through USAID Global Architecture and Engineering IQC Contracts.

BID DOCUMENT SUBMITTAL

SYMB	DESCRIPTION	DATE	
4	CONCRETE JOINT AND WWTP OUTLET MODS	11/01/10	BRG
3	BID DOCUMENT SUBMITTAL	09/09/10	BRG
	DRAIN PIPES THROUGH CURB	09/09/10	BRG
	100% DESIGN SUBMITTAL	07/06/10	BRG
	95% DESIGN SUBMITTAL	06/03/10	NJB
			APR

DESIGNED BY: EWK
DWN BY: EWK
CHK BY: BRG
DATE: 11/01/2010
SUBMITTED BY: TETRA TECH
FILE NO.: LT0005-C-05

USAID FROM THE AMERICAN PEOPLE

AESP

USAID – OIEE
GHAZI BOYS HIGH SCHOOL
SITE AND GRADING DETAILS
SHEET 1 OF 4

SHEET REFERENCE NUMBER:
LT0005
C-05.1

P:\1298\Work Orders\WO-LT\WO-LT-0005 GBHS Utility Design\CAD\Conceptual\Civil\DWG\WOLT05-C-005.1 to 005.3.dwg 11/6/2010 2:54:26 PM Harris, Jessica

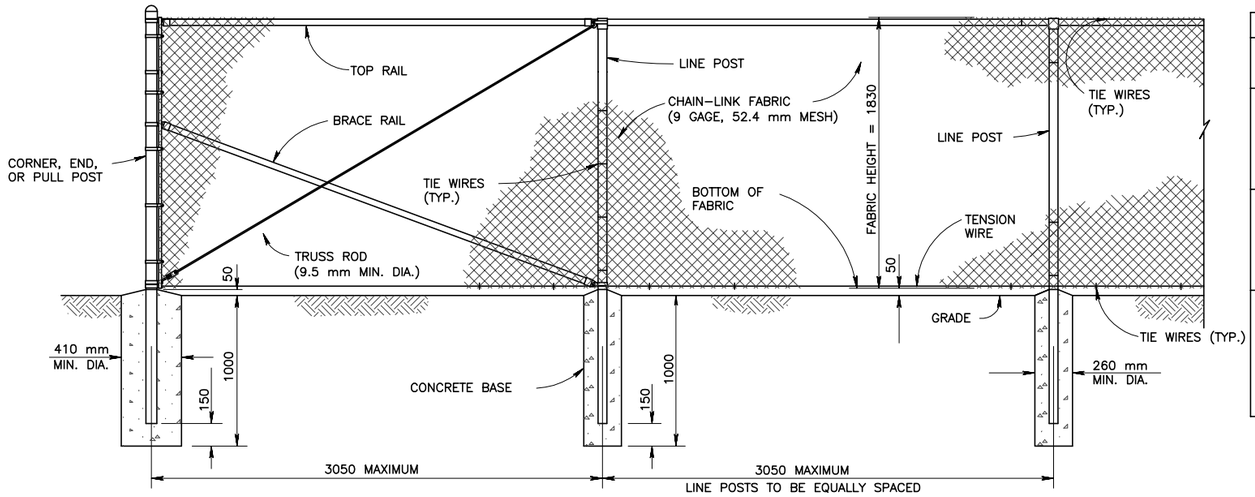

CHAIN–LINK SECURITY FENCE DETAIL
N.T.S.

STEEL POST SCHEDULE			
USE AND SECTION	MINIMUM OUTSIDE DIMENSIONS (NOMINAL)		
	FABRIC LESS THAN 1830 mm	FABRIC 1830 mm TO 2440 mm	FABRIC OVER 2440 mm
CORNER, END & PULL POSTS			
TUBULAR – ROUND	60.3 mm O.D.	73.0 mm O.D.	101.6 mm O.D.
TUBULAR – SQUARE	50.8 mm SQ.	63.5 mm SQ.	76.2 mm SQ.
C–SECTION (ROLL–FORMED)	88.9 mm x 88.9 mm	88.9 mm x 88.9 mm	———
LINE POSTS			
TUBULAR – ROUND	48.2 mm O.D.	60.3 mm O.D.	73.0 mm O.D.
H–SECTION	57.1 mm x 43.1 mm	57.1 mm x 42.1 mm	57.1 mm x 43.1 mm
C–SECTION (ROLL–FORMED)	47.6 mm x 41.2 mm	57.1 mm x 43.1 mm	———
TOP, BOTTOM & BRACE RAILS			
TUBULAR – ROUND	42.3 mm O.D.		
TUBULAR – SQUARE	38.1 mm O.D.		
H–SECTION	41.2 mm x 38.1 mm		
C–SECTION (ROLL–FORMED)	41.2 mm x 31.7 mm		

NOTES:

1. DETAILS SHOWN ARE TO CLARIFY REQUIREMENTS AND ARE NOT INTENDED TO LIMIT OTHER TYPES OF FENCE SECTIONS AND METHODS OF INSTALLATION.
2. WIRE TIES, RAILS, POSTS AND BRACES SHALL BE CONSTRUCTED ON THE SECURE SIDE OF THE FENCE ALIGNMENT. CHAIN–LINK FABRIC SHALL PLACED ON THE OPPOSITE SIDE OF THE SECURE AREA.
3. C–SECTION POSTS SHALL BE INSTALLED SO THAT THE VOID INSIDE THE POST IS COMPLETELY FILLED WITH CONCRETE UP TO THE TOP OF THE FOUNDATION.
4. FENCES SHALL BE GROUNDED ON EACH SIDE OF ALL GATES, AT EACH CORNER, AND WHERE THE FENCE ALIGNMENT CHANGES MORE THAN 15 DEGREES. GROUNDING LOCATIONS SHALL NOT EXCEED 198m (650 FT). EACH GATE PANEL SHALL BE BONDED WITH A FLEXIBLE BOND STRAP TO ITS GATE POST.
5. WHERE DRIVING THE GROUNDING ROD IS IMPRACTICAL, THEY SHALL BE BURIED A MINIMUM OF 305mm (12 IN) DEEP AND RADIAL FROM THE FENCE. THE CLOSEST END OF THE ELECTRODE SHALL NOT BE LESS THAN 610mm (2 FT) OR MORE THAN 2.4m (8 FT) FROM THE FENCE.
6. GROUND CONDUCTOR SHALL BE CLAMPED TO THE FENCE POST AND RODS TO CREATE ELECTRICAL CONTINUITY BETWEEN FENCE POSTS, FENCE FABRIC, AND GROUND RODS.
7. CHAIN LINK FENCE AND MATERIALS SHALL BE GALVANIZED.

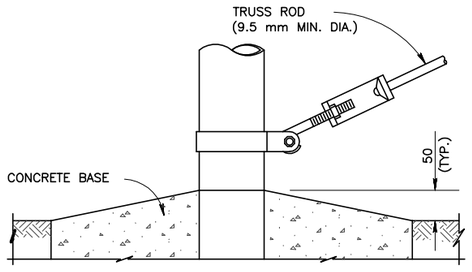

TRUSS ROD AND BAND

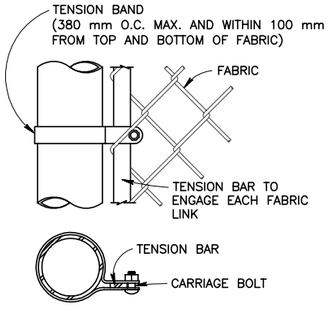

END OR GATE POST DETAIL

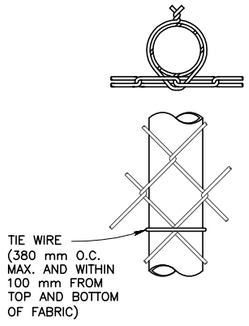

ROUND POST ATTACHMENT

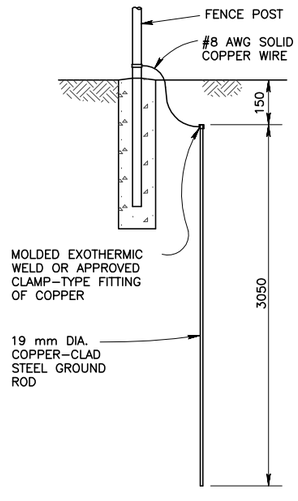

GROUNDING DETAIL
N.T.S.

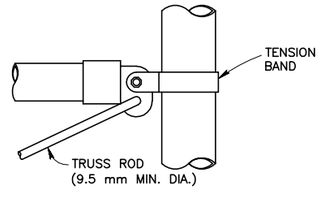

ROUND POST
BRACE RAIL CLAMP DETAILS

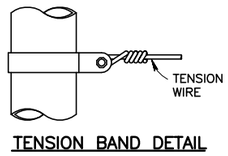

TENSION BAND DETAIL

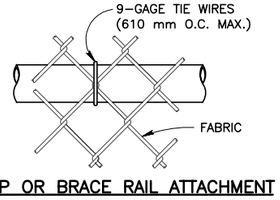

TOP OR BRACE RAIL ATTACHMENT

FASTENING DETAILS
N.T.S.

UNLESS OTHERWISE NOTED, LINEAR DIMENSIONS SHOWN ARE IN MILLIMETERS.

BID DOCUMENT SUBMITTAL

SYMB	DESCRIPTION	DATE	
	BID DOCUMENT SUBMITTAL	09/09/10	BRG
	100% DESIGN SUBMITTAL	07/06/10	BRG
	95% DESIGN SUBMITTAL	06/03/10	NJB

This project was made possible by the United States Agency for International Development and the generous support of the American People through USAID Global Architecture and Engineering IQC Contracts.

DESIGNED BY: EWK | DATE: 09/05/2010
DWN BY: EWK | SUBMITTED BY: TETRA TECH
CHK BY: BRG | FILE NO.: LT0005–C–05

USAID FROM THE AMERICAN PEOPLE

AESP

USAID – OIEE
GHAZI BOYS HIGH SCHOOL
SITE AND GRADING DETAILS
SHEET 2 OF 3

SHEET REFERENCE NUMBER:
LT0005
C–05.2

Z:\127–1298–10001\Work Orders\WO–LT\WO–LT–0005 GBHS Utility Design\CAD\Conceptual\Civil\DWG\WOLT05–C–005.1 to 005.3.dwg 9/8/2010 10:57:26 AM Harris, Jessica

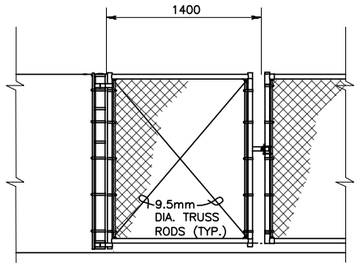

SINGLE SWING GATE
N.T.S.

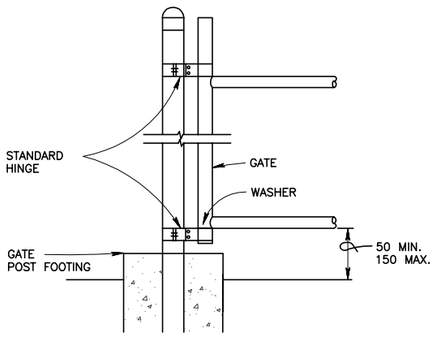

GATE POST DETAIL
N.T.S.

GATE POST SCHEDULE	
GATE LEAF WIDTH (NOMINAL)	OUTSIDE DIMENSION (NOMINAL)
1830 mm OR LESS	73.0 mm O.D. 63.5 mm SQ
MORE THAN 1830 mm TO 3960 mm	101.6 mm O.D.
MORE THAN 3960 mm TO 5480 mm	168.2 mm O.D.
MORE THAN 5480 mm	219.0 mm

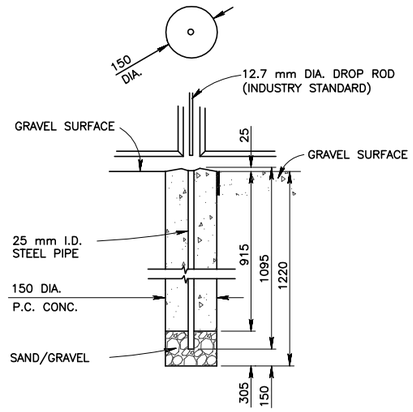

DROP ROD FOUNDATION

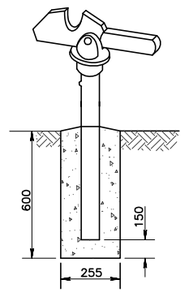

GATE KEEPER
(TO HOLD GATE OPEN)

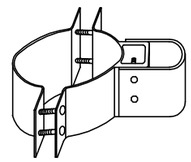

STANDARD HINGE

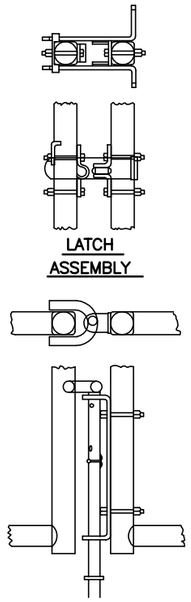

LATCH
ASSEMBLY

DROP ROD
ASSEMBLY

SWING GATE DETAILS
N.T.S.

NOTES:

1. DETAILS SHOWN ARE TO CLARIFY REQUIREMENTS AND ARE NOT INTENDED TO LIMIT OTHER TYPES OF FENCE SECTIONS AND METHODS OF INSTALLATION.
2. SWING GATES SHALL BE CONSTRUCTED WITH DROP RODS, PADLOCKS, LATCH ASSEMBLY, AND GATE KEEPERS EXCEPT AS NOTED.
3. ALL GATE FRAMES SHALL BE A MINIMUM 48.2 mm NOMINAL (ROUND) OR 50.8 mm NOMINAL (SQUARE). GATE FRAMES SHALL BE OF WELDED CONSTRUCTION OR SHALL BE ASSEMBLED USING HEAVY FITTINGS. AT THE CONTRACTOR'S OPTION A WELDED HORIZONTAL BRACE MAY BE USED IN LIEU OF TRUSS RODS TO BRACE ALL WELDED GATE FRAMES. THE CONTRACTOR SHALL BE RESPONSIBLE FOR THE PROPER RIGID CONSTRUCTION OF ALL GATES SUPPLIED.
4. CHAIN LINK FENCE AND MATERIALS SHALL BE GALVANIZED.

UNLESS OTHERWISE NOTED, LINEAR DIMENSIONS SHOWN ARE IN MILLIMETERS.

This project was made possible by the United States Agency for International Development and the generous support of the American People through USAID Global Architecture and Engineering IQC Contracts.

BID DOCUMENT SUBMITTAL

SYMB	DESCRIPTION	DATE	APR
	BID DOCUMENT SUBMITTAL	09/09/10	BRG
	100% DESIGN SUBMITTAL	07/06/10	BRG
	95% DESIGN SUBMITTAL	06/03/10	NJB

DESIGNED BY: EWK
DWN BY: EWK
CHK BY: BRG
DATE: 09/09/2010
SUBMITTED BY: TETRA TECH
FILE NO.: LT0005-C-05

USAID FROM THE AMERICAN PEOPLE

AESP

USAID – OIEE
GHAZI BOYS HIGH SCHOOL
SITE AND GRADING DETAILS
SHEET 3 OF 3

SHEET REFERENCE NUMBER:
LT0005
C-05.3

Z:\127-1298-10001\Work Orders\WO-LT\WO-LT-0005 GBHS Utility Design\CAD\Conceptual\Civil\DWG\WOLT05-C-005.1 to 005.3.dwg 9/8/2010 10:58:44 AM Harris, Jessica

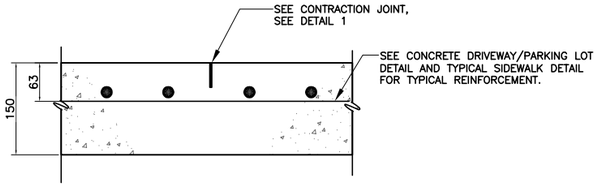

CONTRACTION JOINT DETAIL
N.T.S.

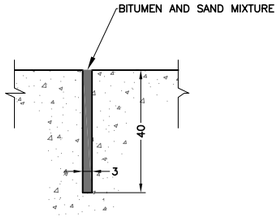

DETAIL 1 – CONTRACTION JOINT DETAIL
N.T.S.

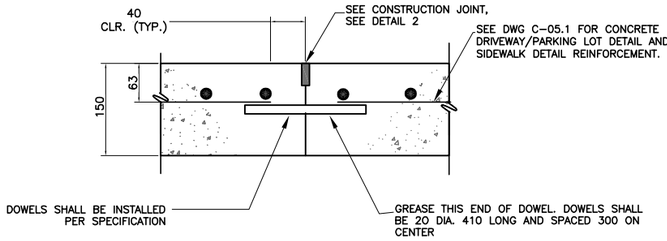

CONSTRUCTION JOINT DETAIL
N.T.S.

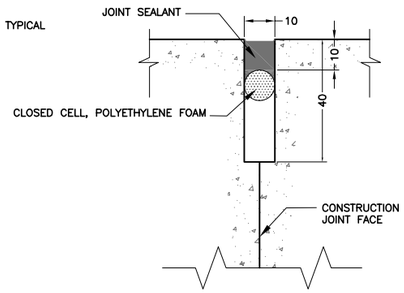

DETAIL 2 – CONSTRUCTION JOINT DETAIL
N.T.S.

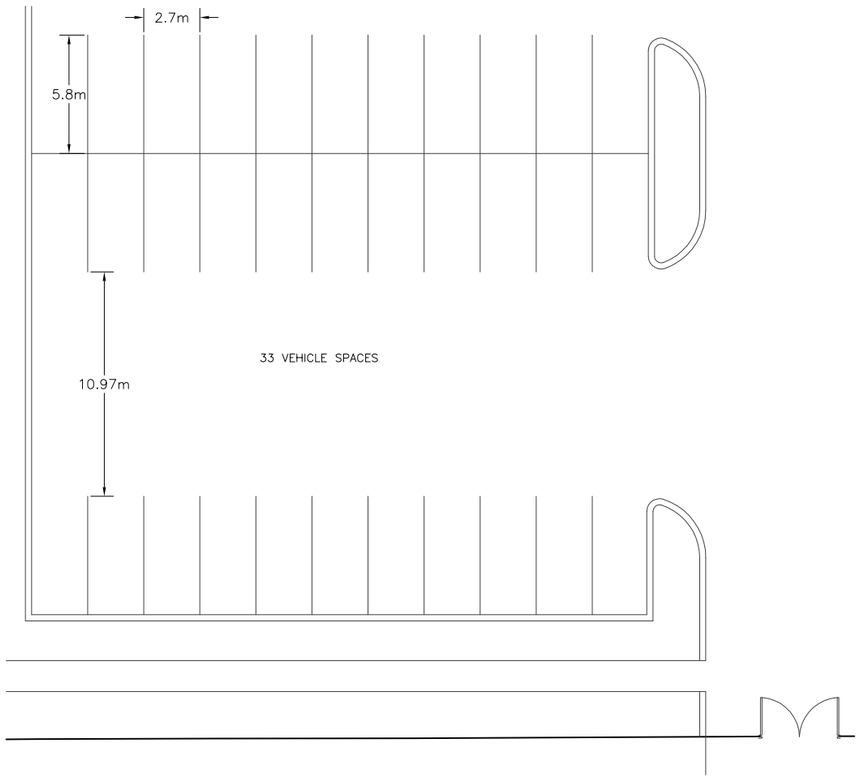

PARKING LAYOUT
SCALE 1:300

UNLESS OTHERWISE NOTED, LINEAR DIMENSIONS SHOWN ARE IN MILLIMETERS.

ADDENDUM 2 SUBMITTAL

This project was made possible by the United States Agency for International Development and the generous support of the American People through USAID Global Architecture and Engineering IQC Contracts.

SYMB	DESCRIPTION	DATE	APR
A	MODIFIED CONCRETE JOINT DETAILS	12/22/10	BRG
B	ADDED DETAIL SHEET FOR CONCRETE JOINTS	11/01/10	BRG

DESIGNED BY: RB
DATE: 12/22/10
DWN BY: ARC
SUBMITTED BY: TETRA TECH
CHK BY: KWC
FILE NO.: WOLT05-C-05.4

USAID FROM THE AMERICAN PEOPLE

AESP

USAID – OIEE
GHAZI BOYS HIGH SCHOOL
SITE & GRADING DETAILS
SHEET 4 OF 4

SHEET REFERENCE NUMBER:
LT0005
C-05.4

P:\1298\Work Orders\WO-LT\WO-LT-0005 GBHS Utility Design\CAD\Conceptual\Civil\DWG\WOLT05-C-05.4.dwg 12/22/2010 6:31:07 PM Safai, Ahmad Shekib

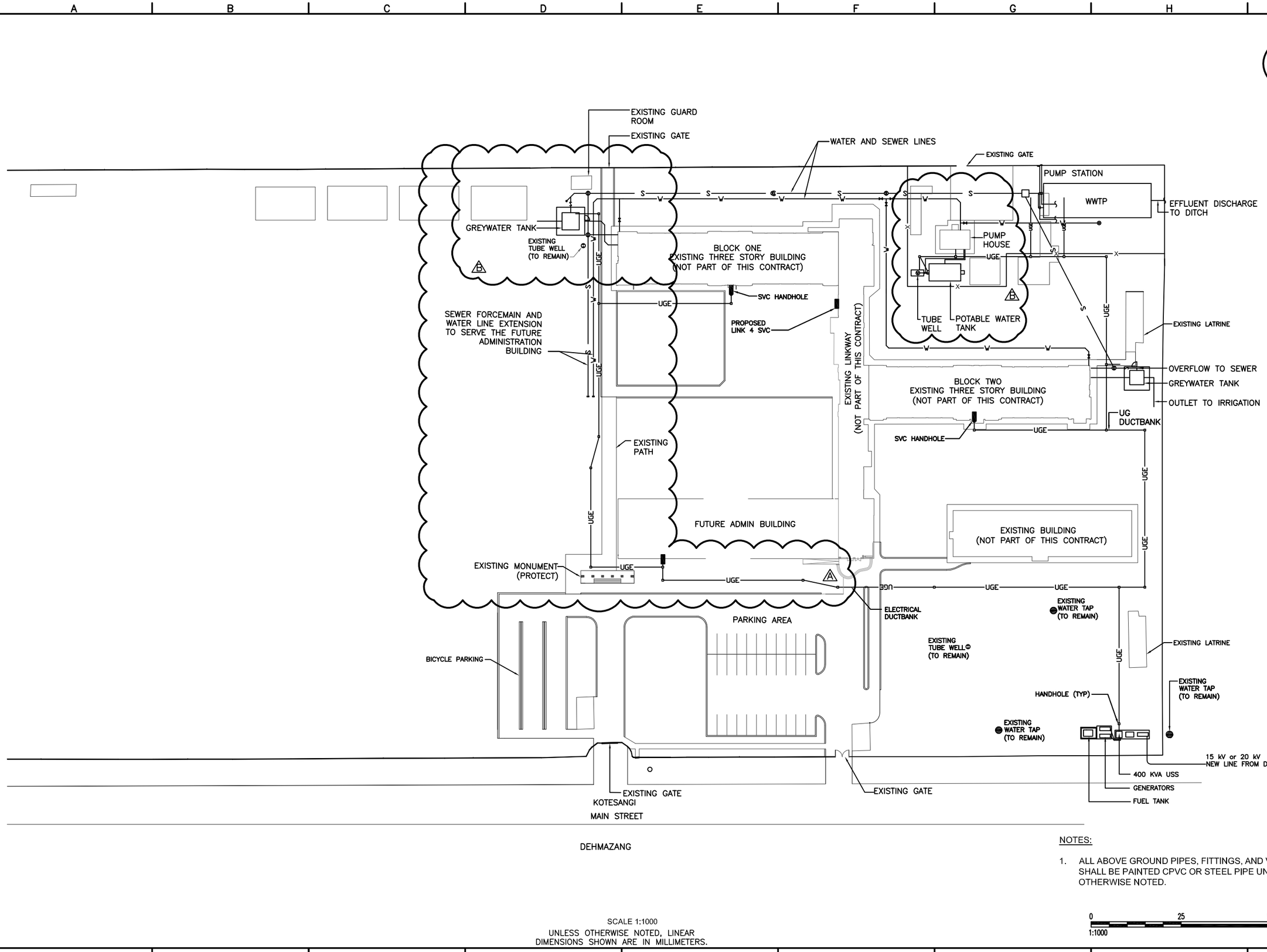

NOTES:

1. ALL ABOVE GROUND PIPES, FITTINGS, AND VALVES SHALL BE PAINTED CPVC OR STEEL PIPE UNLESS OTHERWISE NOTED.

0 25 50
1:1000

SCALE 1:1000
UNLESS OTHERWISE NOTED, LINEAR DIMENSIONS SHOWN ARE IN MILLIMETERS.

ADDENDUM 2 SUBMITTAL

SYMB	DESCRIPTION	DATE	APR
4	MOVED NEW FACILITIES TO MISS EXISTING STRUCTURES	12/22/10	BRG
3	SEWER & WATER FOR ADMIN BLDG CONNECTION	11/01/10	BRG
	BID DOCUMENT SUBMITTAL	09/09/10	BRG
	100% DESIGN SUBMITTAL	07/06/10	BRG
	95% DESIGN SUBMITTAL	06/03/10	NJB

This project was made possible by the United States Agency for International Development and the generous support of the American People through USAID Global Architecture and Engineering IQC Contracts.

DESIGNED BY: JLH | DATE: 12/22/2010
DWN BY: JLH | SUBMITTED BY: TETRA TECH
CHK BY: BRG | FILE NO.: LT0005-C-06

USAID FROM THE AMERICAN PEOPLE

AESP

USAID – OIEE
GHAZI BOYS HIGH SCHOOL
COMBINED SITE INFRASTRUCTURE PLAN FOR UTILITIES

SHEET REFERENCE NUMBER:
LT0005
C–06

P:\1298\Work Orders\WO-LT\WO-LT-0005 GBHS Utility Design\CAD\Conceptual\Civil\DWG\WOLT05-C-006.dwg 12/21/2010 3:23:25 PM Harris, Jessica

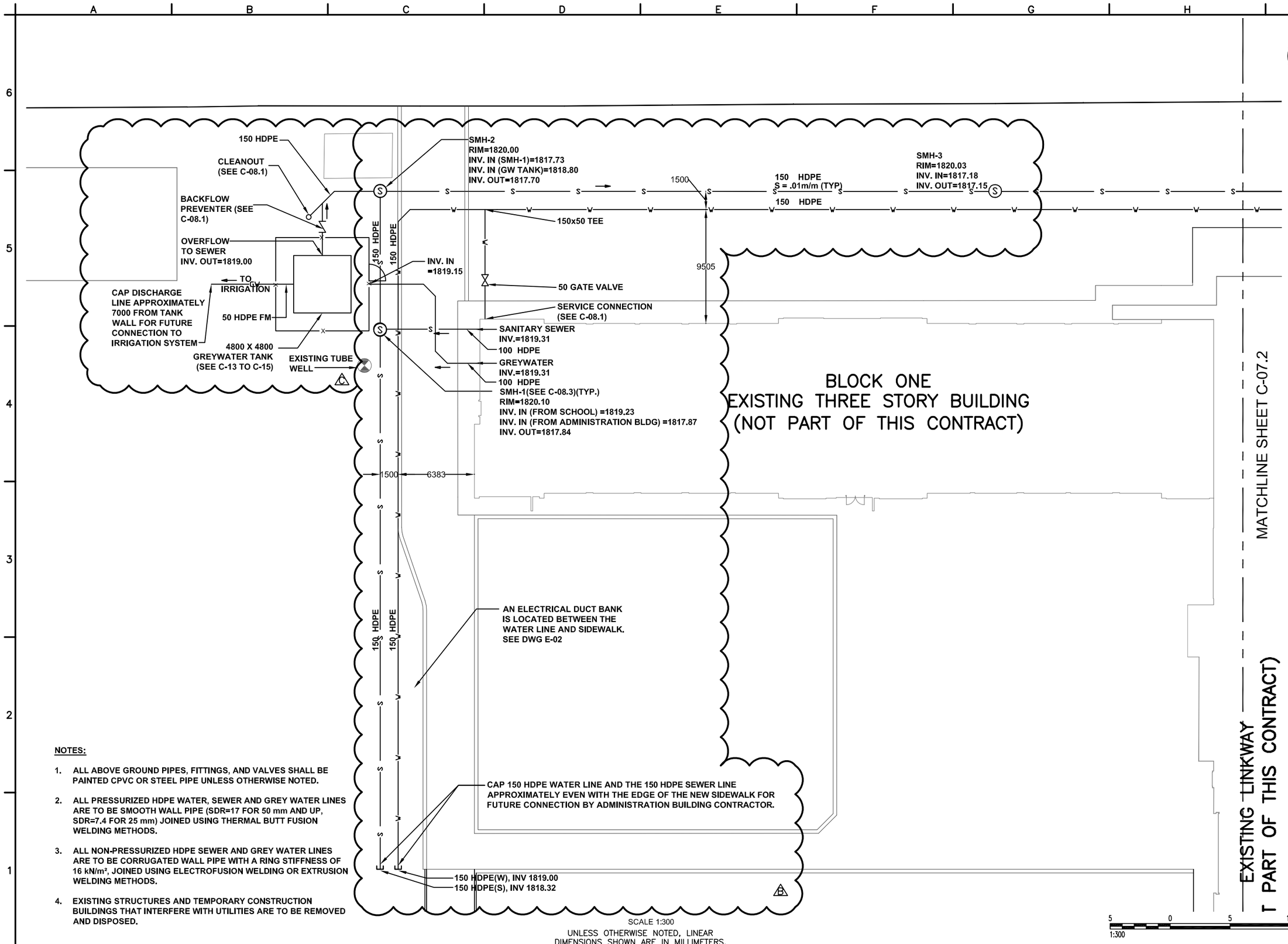

SCALE 1:300

UNLESS OTHERWISE NOTED, LINEAR DIMENSIONS SHOWN ARE IN MILLIMETERS.

NOTES:

1. ALL ABOVE GROUND PIPES, FITTINGS, AND VALVES SHALL BE PAINTED CPVC OR STEEL PIPE UNLESS OTHERWISE NOTED.
2. ALL PRESSURIZED HDPE WATER, SEWER AND GREY WATER LINES ARE TO BE SMOOTH WALL PIPE (SDR=17 FOR 50 mm AND UP, SDR=7.4 FOR 25 mm) JOINED USING THERMAL BUTT FUSION WELDING METHODS.
3. ALL NON-PRESSURIZED HDPE SEWER AND GREY WATER LINES ARE TO BE CORRUGATED WALL PIPE WITH A RING STIFFNESS OF 16 kN/m², JOINED USING ELECTROFUSION WELDING OR EXTRUSION WELDING METHODS.
4. EXISTING STRUCTURES AND TEMPORARY CONSTRUCTION BUILDINGS THAT INTERFERE WITH UTILITIES ARE TO BE REMOVED AND DISPOSED.

ADDENDUM 2 SUBMITTAL

	DESCRIPTION	DATE	
5	MOVED GW TANK TO MISS EXISTING WELL	12/22/10	BRG
4	SEWER & WATER FOR ADMIN. BLDG. CONN.	11/01/10	BRG
3	BID DOCUMENT SUBMITTAL	09/09/10	BRG
2	100% DESIGN SUBMITTAL	07/06/10	BRG
1	95% DESIGN SUBMITTAL	06/03/10	NJB
	SMB		APR

DESIGNED BY: JLH | DATE: 12/22/2010
DWN BY: JLH | SUBMITTED BY: TETRA TECH
CHK BY: BRG | FILE NO.: LT0005–C–07

This project was made possible by the United States Agency for International Development and the generous support of the American People through USAID Global Architecture and Engineering IQC Contracts.

USAID FROM THE AMERICAN PEOPLE

AESP

USAID – OIEE
GHAZI BOYS HIGH SCHOOL
WATER AND SEWER UTILITY PLAN
SHEET 1 OF 2

SHEET REFERENCE NUMBER:
LT0005
C–07.1

P:\1298\Work Orders\WO-LT\WO-LT-0005 GBHS Utility Design\CAD\Conceptual\Civil\DWG\WOLT05-C-007.1 to 007.2.dwg 12/22/2010 4:01:37 PM Safdi, Ahmad Shekib

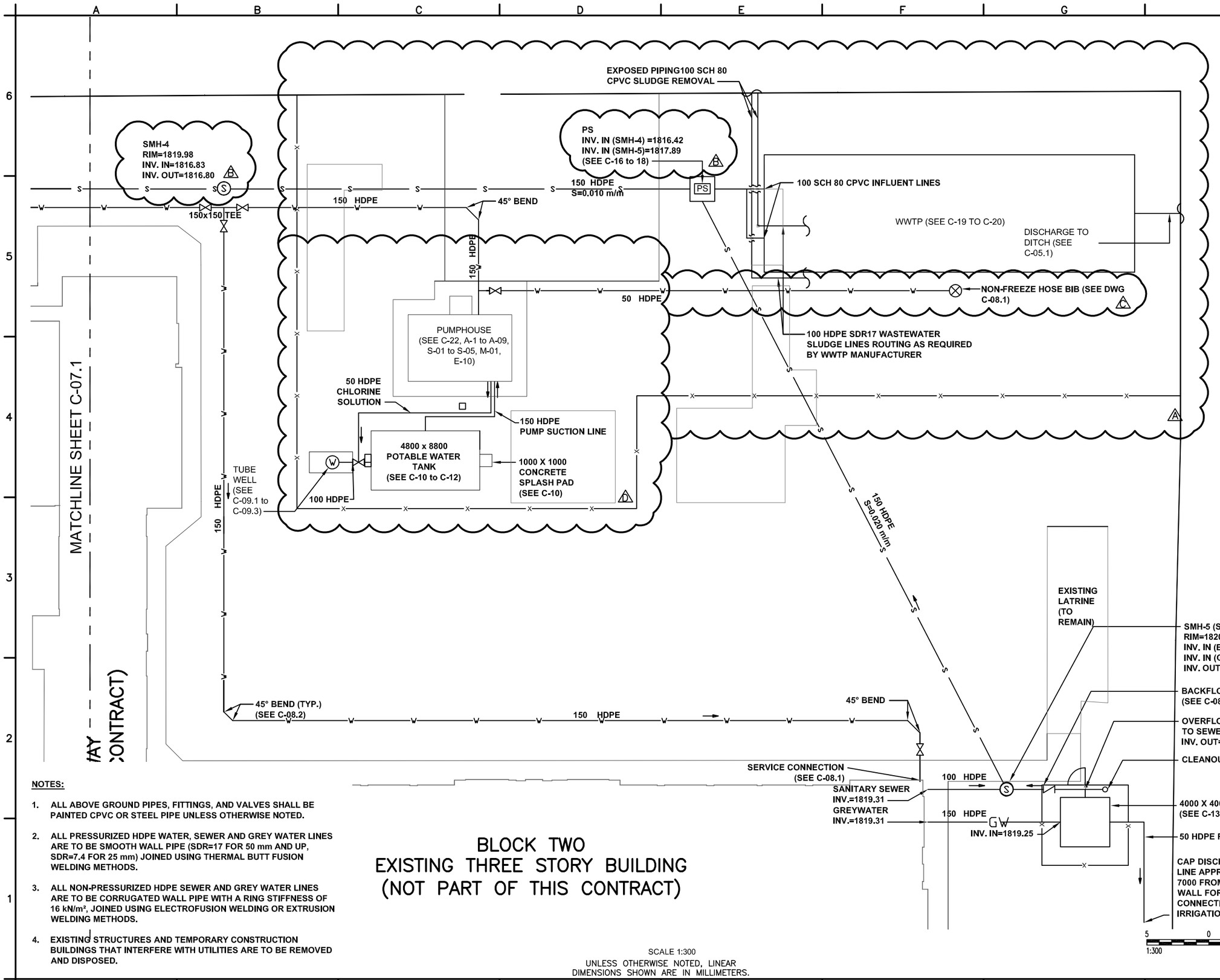

NOTES:

1. ALL ABOVE GROUND PIPES, FITTINGS, AND VALVES SHALL BE PAINTED CPVC OR STEEL PIPE UNLESS OTHERWISE NOTED.
2. ALL PRESSURIZED HDPE WATER, SEWER AND GREY WATER LINES ARE TO BE SMOOTH WALL PIPE (SDR=17 FOR 50 mm AND UP, SDR=7.4 FOR 25 mm) JOINED USING THERMAL BUTT FUSION WELDING METHODS.
3. ALL NON-PRESSURIZED HDPE SEWER AND GREY WATER LINES ARE TO BE CORRUGATED WALL PIPE WITH A RING STIFFNESS OF 16 kN/m², JOINED USING ELECTROFUSION WELDING OR EXTRUSION WELDING METHODS.
4. EXISTING STRUCTURES AND TEMPORARY CONSTRUCTION BUILDINGS THAT INTERFERE WITH UTILITIES ARE TO BE REMOVED AND DISPOSED.

SCALE 1:300
UNLESS OTHERWISE NOTED, LINEAR DIMENSIONS SHOWN ARE IN MILLIMETERS.

ADDENDUM 2 SUBMITTAL

SYMB	DESCRIPTION	DATE	APR
A	MOVED WATER RESERVOIR AND PUMP HOUSE	12/22/10	BRG
A	ADDED NON-FREEZE HOSE BIB	11/01/10	BRG
B	DEEPENING SEWER FOR ADMIN. BLDG. CONN.	11/01/10	BRG
A	BID DOCUMENT SUBMITTAL	09/09/10	BRG
	MISCELLANEOUS SITE PLAN MODIFICATIONS	09/09/10	BRG
	100% DESIGN SUBMITTAL	07/06/10	BRG
	95% DESIGN SUBMITTAL	06/03/10	NJB

This project was made possible by the United States Agency for International Development and the generous support of the American People through USAID Global Architecture and Engineering IQC Contracts.

DESIGNED BY: JLH | DATE: 12/22/2010
DWN BY: JLH | SUBMITTED BY: TETRA TECH
CHK BY: BRG | FILE NO.: LT0005-C-07

USAID FROM THE AMERICAN PEOPLE

AESP

USAID – OIEE
GHAZI BOYS HIGH SCHOOL
WATER AND SEWER UTILITY PLAN
SHEET 2 OF 2

SHEET REFERENCE NUMBER:
LT0005
C-07.2

P:\1298\Work Orders\WO-LT\WO-LT-0005 GBHS Utility Design\CAD\Conceptual\Civil\DWG\WOLT05-C-007.1 to 007.2.dwg 12/21/2010 3:46:56 PM Harris, Jessica

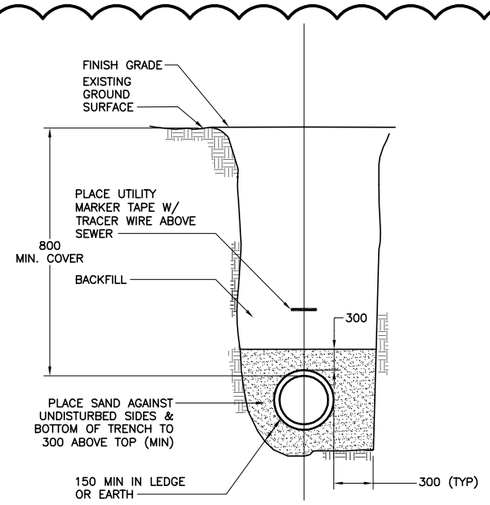

HDPE SEWER TRENCH DETAIL
N.T.S.

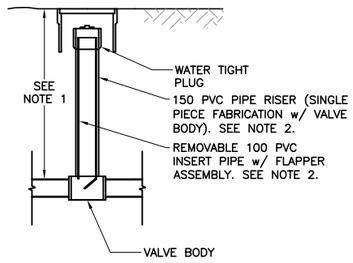

BACKFLOW PREVENTION DEVICE
N.T.S.

NOTE:

1. SEWER LINE DEPTH SHALL BE AS NEEDED TO MATCH PIPE INVERT ELEVATION.
2. THE BACKFLOW PREVENTION DEVICE (RISER PIPE, VALVE BODY AND THE INSERT PIPE WITH FLAPPER ASSEMBLY) SHALL BE MANUFACTURED BY CLEAN CHECK INC. OR APPROVED EQUAL.
3. BACKFLOW PREVENTION DEVICE TO BE LOCATED AS SHOWN FOR THE OVERFLOW LINES OF THE GREY WATER TANKS. SEE DWGS. C-07.1 AND C-07.2.

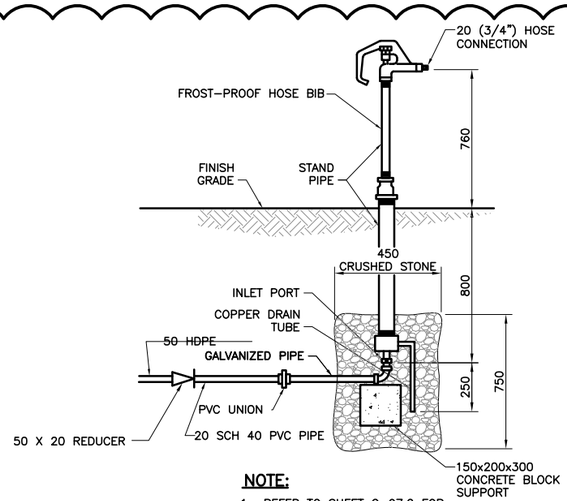

NOTE:

1. REFER TO SHEET C-07.2 FOR INSTALLATION LOCATIONS
2. TWO BOLLARDS REQUIRED AT EACH INSTALLATION.

FROST-PROOF YARD HYDRANT
N.T.S.

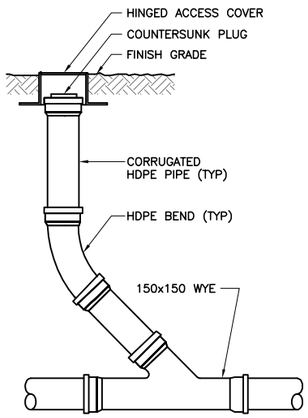

IN-LINE

SANITARY CLEANOUT TO GRADE
N.T.S.

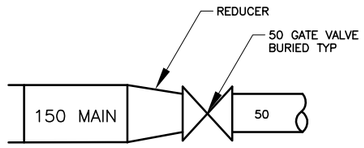

INLINE WATER SERVICE CONNECTION
N.T.S.

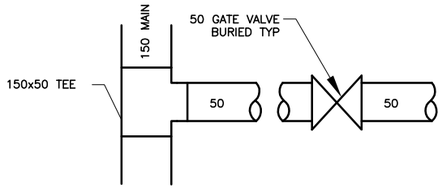

BRANCH WATER SERVICE CONNECTION
N.T.S.

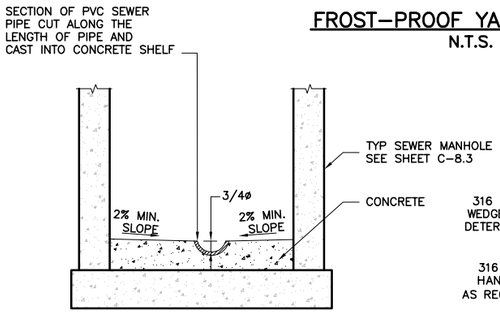

SEWER MANHOLE INVERT
N.T.S.

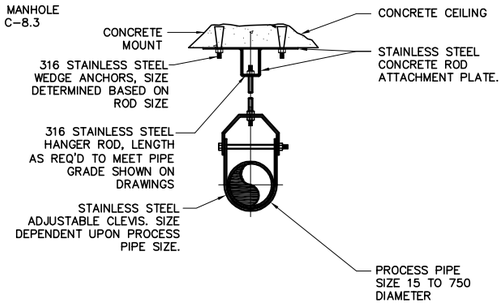

PIPE HANGER SUPPORT – CLEVIS AND PLATE
N.T.S.

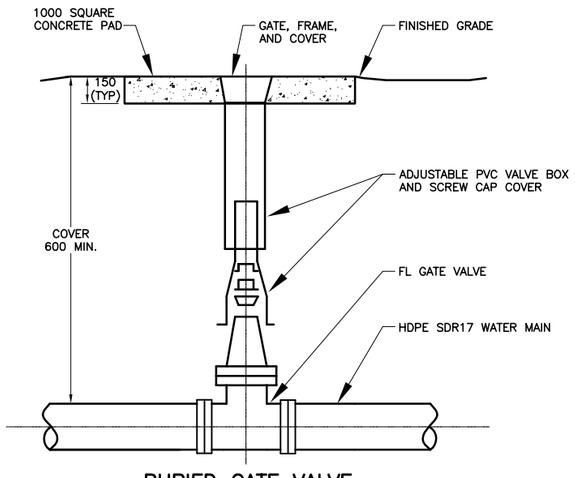

BURIED GATE VALVE
N.T.S.

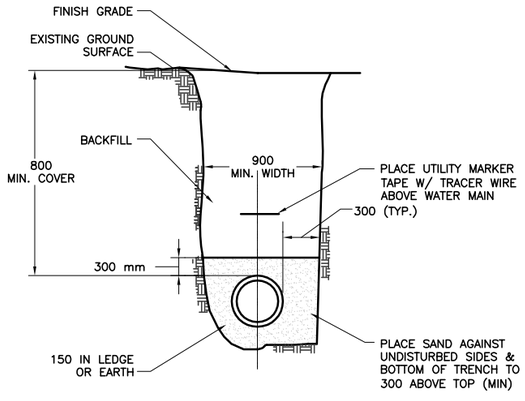

WATER MAIN TRENCH
N.T.S.

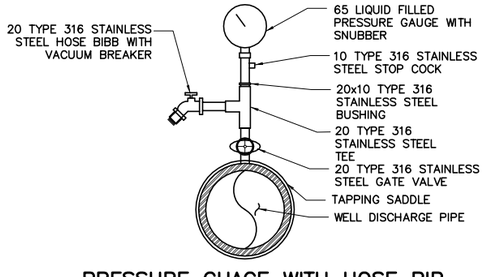

PRESSURE GUAGE WITH HOSE BIB
N.T.S.

UNLESS OTHERWISE NOTED, LINEAR DIMENSIONS SHOWN ARE IN MILLIMETERS.

BID DOCUMENT SUBMITTAL

SYMB	DESCRIPTION	DATE	
1	ADDITIONAL DETAILS AND MODIFICATIONS	11/01/10	BRG
	BID DOCUMENT SUBMITTAL	09/09/10	BRG
	SERVICE CONNECTION DETAIL MODIFICATIONS	09/09/10	BRG
	100% DESIGN SUBMITTAL	07/06/10	BRG
	95% DESIGN SUBMITTAL	06/03/10	NJB

This project was made possible by the United States Agency for International Development and the generous support of the American People through USAID Global Architecture and Engineering IQC Contracts.

DESIGNED BY: EWK
DRN BY: EWK
CHK BY: BRG
DATE: 11/01/2010
SUBMITTED BY: TETRA TECH
FILE NO.: LT0005-C-08

USAID FROM THE AMERICAN PEOPLE

AESP

USAID – OIEE
GHAZI BOYS HIGH SCHOOL
WATER AND SEWER DETAILS
SHEET 1 OF 3

SHEET REFERENCE NUMBER:
LT0005 C-08.1

P:\1298\Work Orders\WO-LT\WO-LT-0005 GBHS Utility Design\CAD\Conceptual\Civil\DWG\WOLT05-C-008.1-08.2.dwg 11/6/2010 2:58:01 PM Harris, Jessica

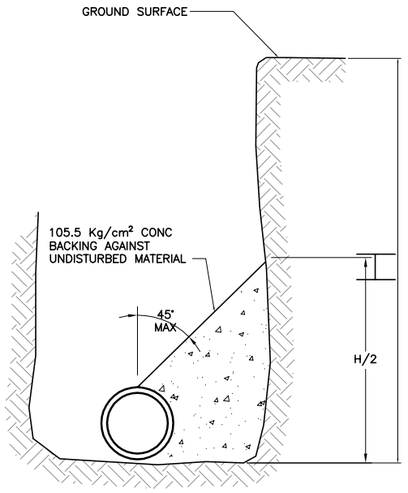

CONCRETE THRUST BLOCK DETAIL
N.T.S.

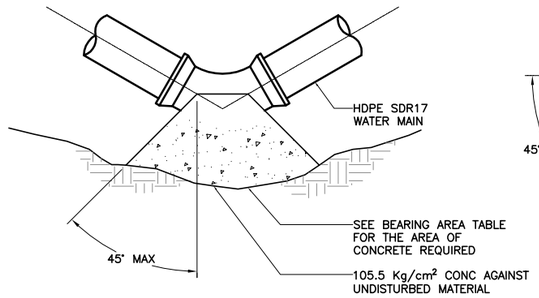

PLAN OF THRUST BLOCK AT BEND
N.T.S.

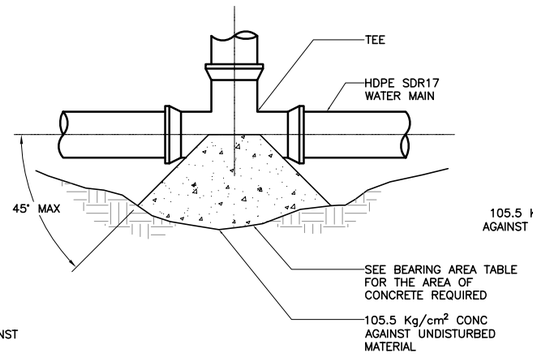

PLAN OF THRUST BLOCK AT TEE
N.T.S.

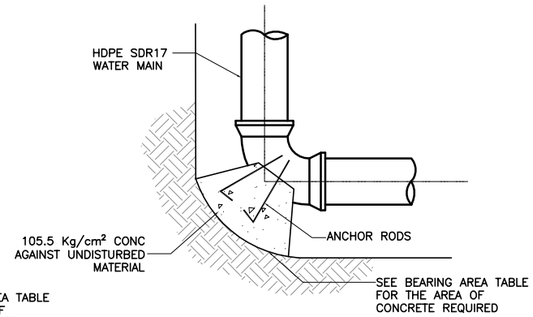

PLAN OR THRUST BLOCK AT 90° VERTICAL BEND
N.T.S.

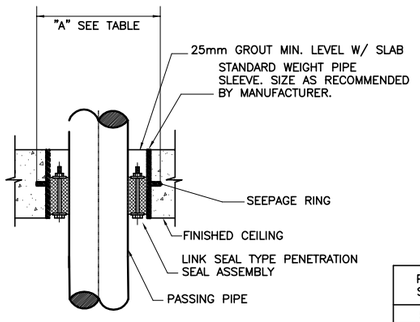

ROOF PIPE PENETRATION DETAIL
N.T.S.

PIPE SIZE	NOMINAL SLEEVE DIAMETER	"A"
50	100	150
65	100	200
80	150	200
100	150	250
150	250	350
200	300	400
250	350	450
300	400	500
350	450	550
400	500	600
450	600	650
500	600	700
600	750	800

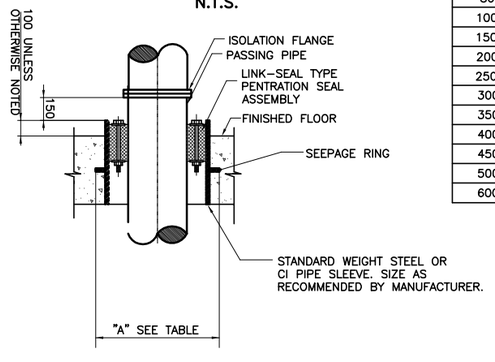

FLOOR PIPE PENETRATION DETAIL
N.T.S.

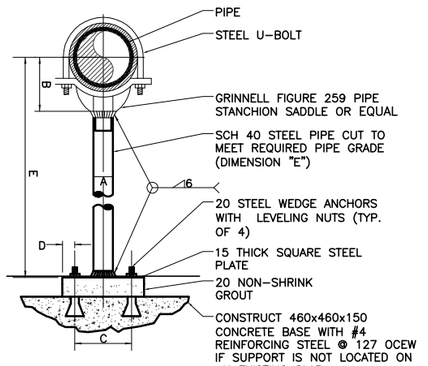

PIPE SIZE	A	B	C	D	E	
					MIN	MAX
100	80	105	200	25	150	1500
150	80	125	200	25	150	1500
200	80	175	200	25	200	1500
250	80	215	200	25	250	1500

PIPE SUPPORT – STANCHION SADDLE
N.T.S.

NOTE:

THIS DETAIL IS TO BE USED FOR INTERIOR BUILDING APPLICATIONS, AND WATER TANK VALVE SUPPORT.

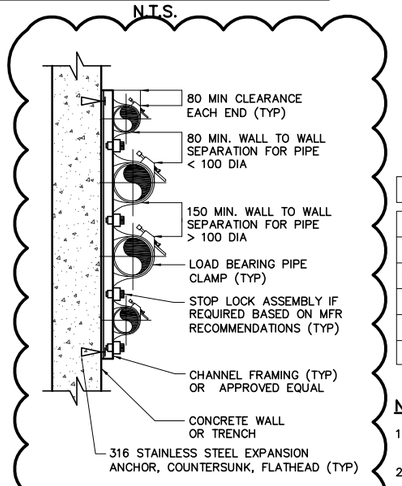

PIPE SUPPORT – STACKED (SMALL DIAMETER)
N.T.S.

ANCHOR ROD SCHEDULE FOR GRAVITY BLOCKS

PIPE SIZE	RODS	MINIMUM EMBEDMENT LENGTH
100	2 – #25	150
150	2 – #25	150
200	2 – #25	150

BEARING AREA FOR VARIOUS PIPE DIAMETERS

FITTING	25	50	75	100	150	200	250	300
1/32 BEND (286mm)	.093m²	.093m²	.093m²	.093m²	.093m²	.093m²	.186m²	.186m²
1/16 BEND (572mm)	.093m²	.093m²	.093m²	.093m²	.093m²	.186m²	.279m²	.372m²
1/8 BEND (45°)	.093m²	.093m²	.093m²	.093m²	.186m²	.279m²	.465m²	.651m²
1/4 BEND (90°)	.093m²	.093m²	.093m²	.186m²	.279m²	.558m²	.837m²	1.116m²
TEE/PLUG	.093m²	.093m²	.093m²	.093m²	.279m²	.372m²	.558m²	.837m²

NOTES:

1. ALL ELBOWS, BENDS, AND CAPS SHALL BE BRACED WITH CONCRETE THRUST BLOCKS. JOINTS SHALL NOT BE ENCASED IN CONCRETE.
2. BEARING AREA IS AREA OF CONCRETE IN CONTACT WITH WALL OF TRENCH (H X L).
3. HEIGHT AND LENGTH AS REQUIRED TO OBTAIN BEARING AREA SHOWN IN THE TABLE W/ H APPROX. 1/2 L.
4. THRUST BLOCK SIZING BASED ON 10.5 Kg/cm² WATER PRESSURE AND 211 Kg/cm² SOIL BEARING CAPACITY.
5. PROVIDE FLEXIBLE EXPANSION FITTING TO ACCOMMODATE APPROXIMATELY 38MM TO 50MM OF SETTLEMENT. FITTING TO BE RESISTANT TO UV EXPOSURE AND COMPLY WITH PIPE TESTING REQUIREMENTS AS STATED IN SPECIFICATIONS.

UNLESS OTHERWISE NOTED, LINEAR DIMENSIONS SHOWN ARE IN MILLIMETERS.

BID DOCUMENT SUBMITTAL

SYMB	DESCRIPTION	DATE	APR
A	ADDITIONAL DETAIL	11/01/10	BRG
	BID DOCUMENT SUBMITTAL	09/09/10	BRG
	100% DESIGN SUBMITTAL	07/06/10	BRG
	95% DESIGN SUBMITTAL	06/03/10	NJB

This project was made possible by the United States Agency for International Development and the generous support of the American People through USAID Global Architecture and Engineering IQC Contracts.

DESIGNED BY: EWK
DRN BY: EWK
CHK BY: BRG
DATE: 11/01/2010
SUBMITTED BY: TETRA TECH
FILE NO.: LT0005-C-08

USAID FROM THE AMERICAN PEOPLE

AESP

USAID – OIEE
GHAZI BOYS HIGH SCHOOL
WATER AND SEWER DETAILS
SHEET 2 OF 3

SHEET REFERENCE NUMBER:
LT0005
C-08.2

P:\1298\Work Orders\WO-LT\WO-LT-0005 GBHS Utility Design\CAD\Conceptual\Civil\DWG\WOLT05-C-008.1-08.2.dwg 11/6/2010 2:58:26 PM Harris, Jessica

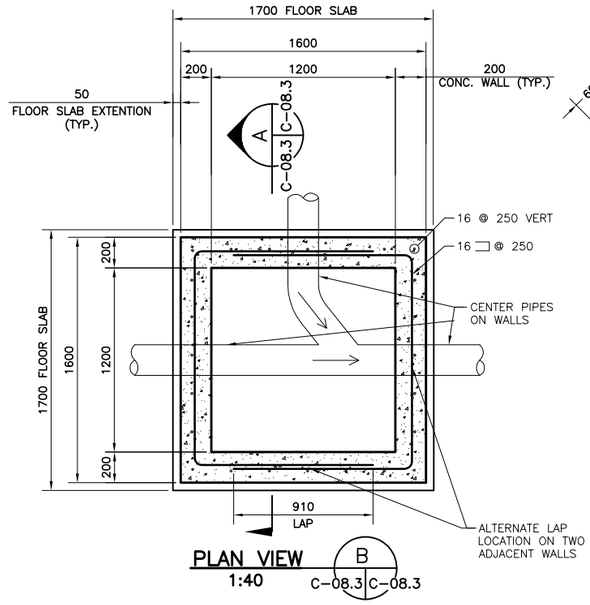

PLAN VIEW
1:40

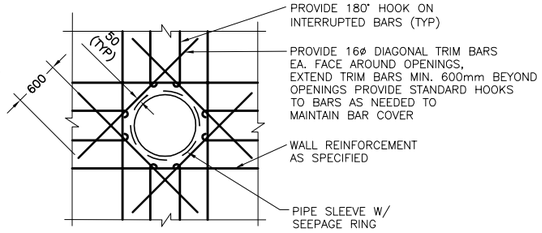

NOTE: PROVIDE ADDITIONAL REINFORCING EQUAL TO BARS INTERRUPTED, 1/2 EACH SIDE, ADDITIONAL BARS TO BE IN SAME PLANE.

REINFORCING AROUND WALL PENETRATION
N.T.S.

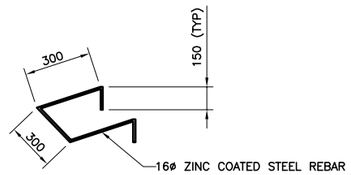

LADDER RUNG
N.T.S

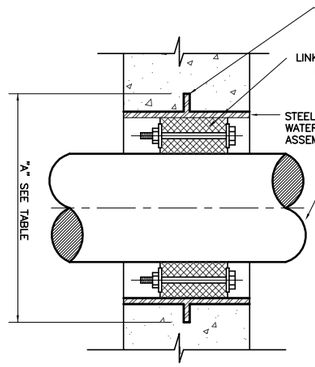

PIPE SIZE	NOMINAL SLEEVE DIAMETER	"A"
50	100	150
65	100	200
80	150	200
100	150	250
150	250	350
200	300	400
250	350	450
300	400	500
350	450	550
400	500	600
450	600	650
500	600	700
600	750	800

NOTE:

ALL DIMENSIONS ARE IN MILLIMETERS UNLESS OTHERWISE NOTED.

WALL PIPE PENETRATION DETAIL
N.T.S.

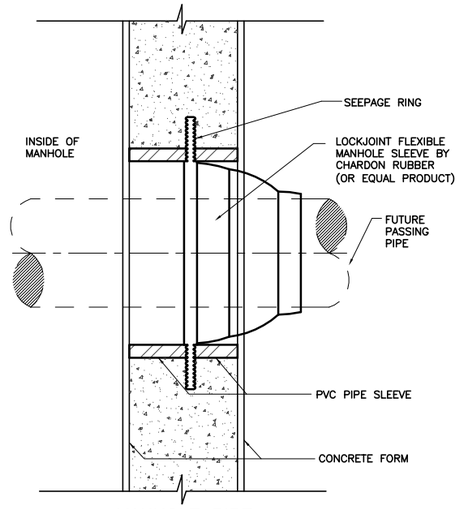

MANHOLE PIPE PENETRATION DETAIL
N.T.S.

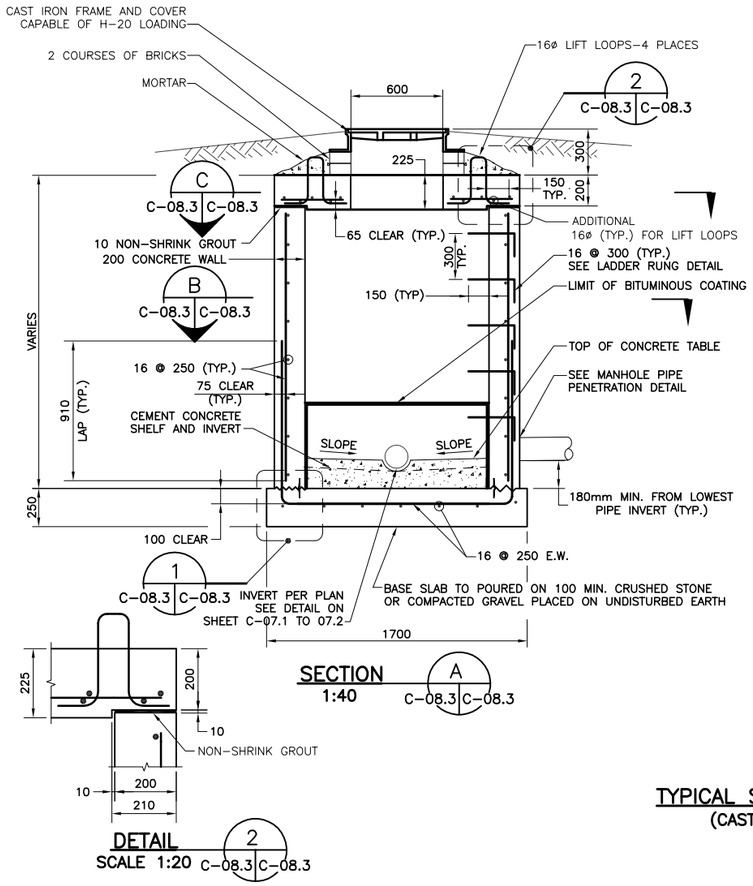

SECTION
1:40 A C-08.3 C-08.3

DETAIL
SCALE 1:20 2 C-08.3 C-08.3

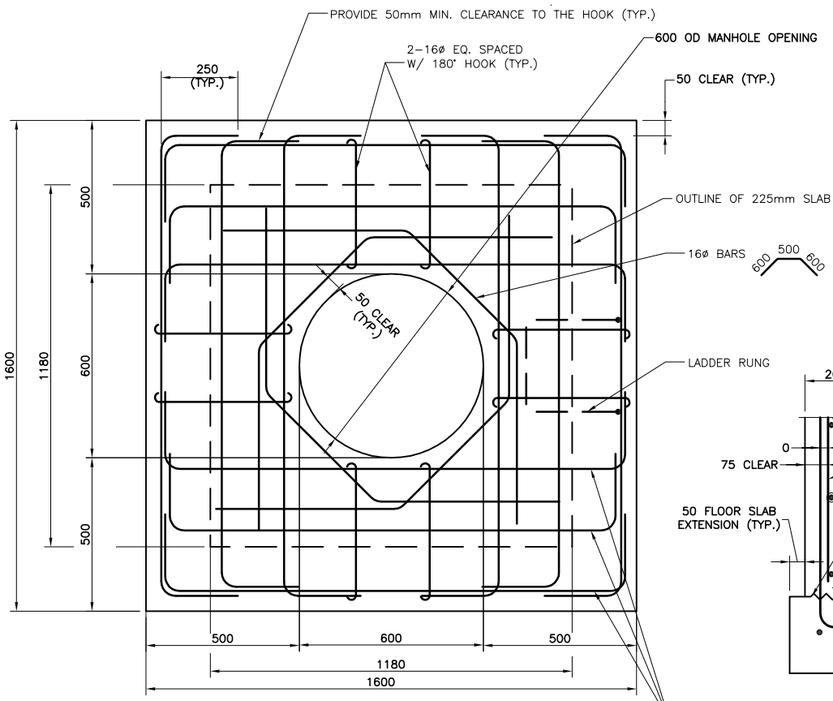

TOP SLAB REINFORCEMENT PLAN
SCALE 1:20 C C-08.3 C-08.3

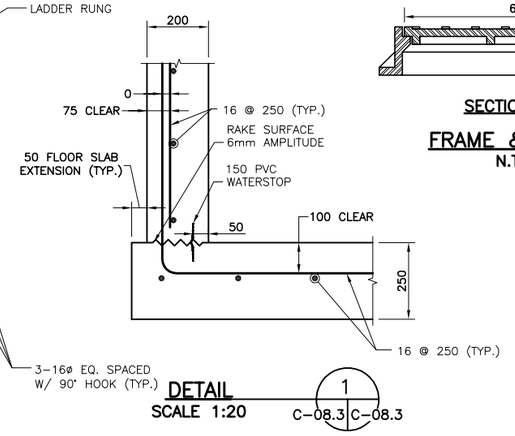

DETAIL
SCALE 1:20 1 C-08.3 C-08.3

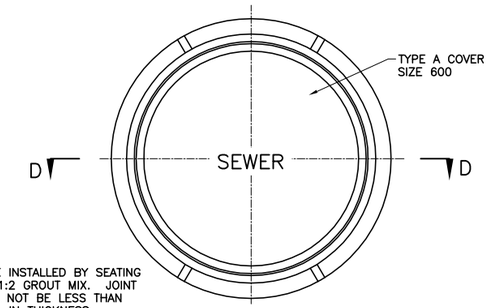

FRAME & COVER
N.T.S.

TYPICAL SEWER DETAILS
(CAST-IN-PLACE)

NOTES:
1. PROVIDE 50mm CLEARANCE U.N.O. ON DWG.
2. STRUCTURAL CONCRETE SHALL BE NORMAL WEIGHT CONCRETE HAVING MINIMUM STRENGTH OF 210 Kg/cm2 (3000 PSI) AT 28 DAYS.

UNLESS OTHERWISE NOTED, LINEAR DIMENSIONS SHOWN ARE IN MILLIMETERS.

BID DOCUMENT SUBMITTAL

SYMB	DESCRIPTION	DATE	APR
	BID DOCUMENT SUBMITTAL	09/09/10	BRG
	100% DESIGN SUBMITTAL	07/06/10	BRG
	95% DESIGN SUBMITTAL	06/03/10	NJB

This project was made possible by the United States Agency for International Development and the generous support of the American People through USAID Global Architecture and Engineering IQC Contracts.

DESIGNED BY: EWK
DRN BY: EWK
CHK BY: BRG
DATE: 09/09/2010
SUBMITTED BY: TETRA TECH
FILE NO.: LT0005-C-08

USAID FROM THE AMERICAN PEOPLE

AESP

USAID - OIEE
GHAZI BOYS HIGH SCHOOL
WATER & SEWER DETAILS
SHEET 3 OF 3

SHEET REFERENCE NUMBER:
LT0005
C-08.3

Z:\127-1298-10001\Work Orders\WO-LT\WO-LT-0005 GBHS Utility Design\CAD\Conceptual\Civil\DWG\WOLT05-C-08.3.dwg 9/8/2010 11:42:52 AM Harris, Jessica

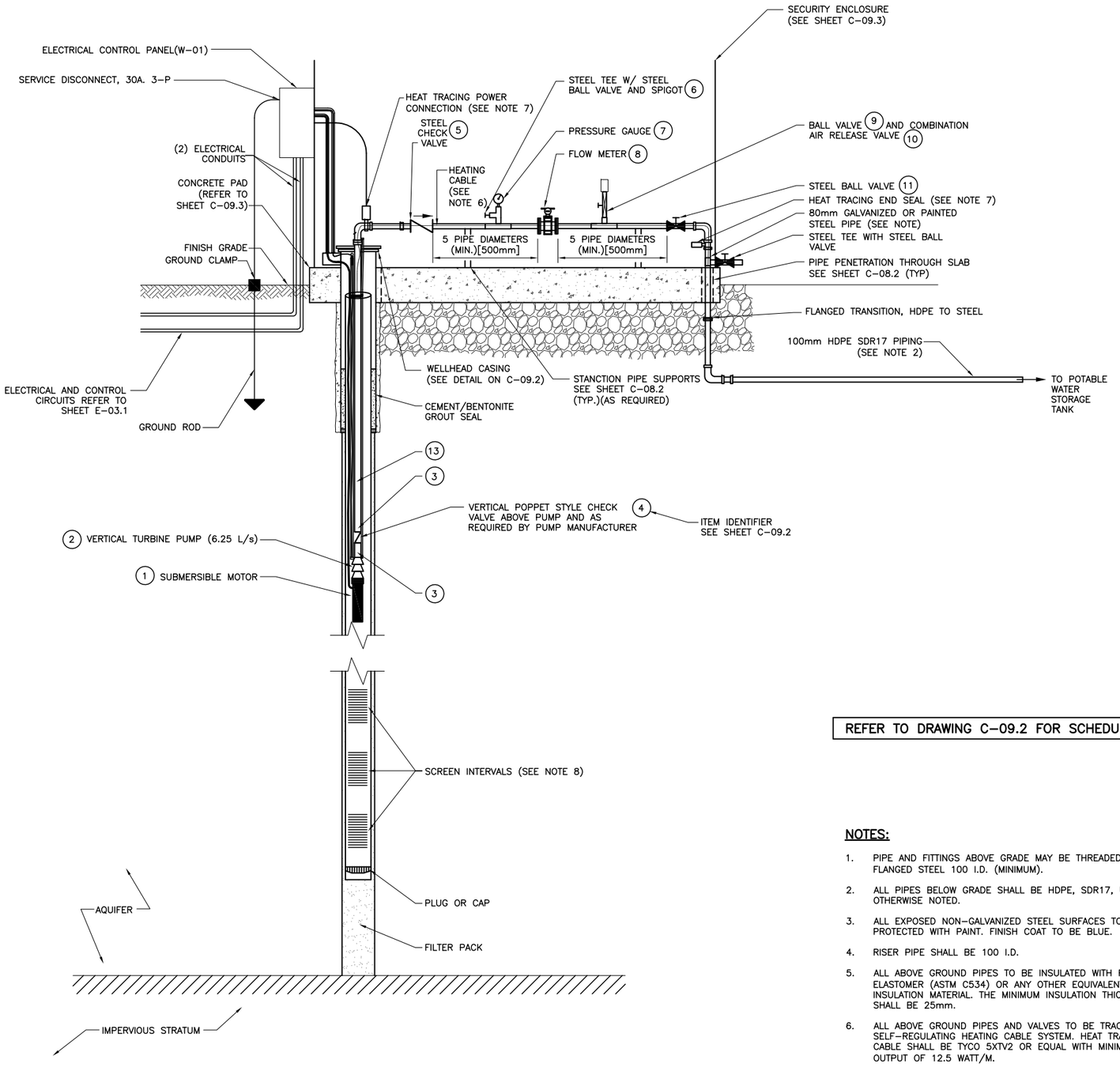

WELL, PUMP AND PIPING DETAIL
N.T.S.

UNLESS OTHERWISE NOTED, LINEAR DIMENSIONS SHOWN ARE IN MILLIMETERS.

REFER TO DRAWING C-09.2 FOR SCHEDULE

NOTES:

1. PIPE AND FITTINGS ABOVE GRADE MAY BE THREADED OR FLANGED STEEL 100 I.D. (MINIMUM).
2. ALL PIPES BELOW GRADE SHALL BE HDPE, SDR17, UNLESS OTHERWISE NOTED.
3. ALL EXPOSED NON-GALVANIZED STEEL SURFACES TO BE PROTECTED WITH PAINT. FINISH COAT TO BE BLUE.
4. RISER PIPE SHALL BE 100 I.D.
5. ALL ABOVE GROUND PIPES TO BE INSULATED WITH FOAMED ELASTOMER (ASTM C534) OR ANY OTHER EQUIVALENT INSULATION MATERIAL. THE MINIMUM INSULATION THICKNESS SHALL BE 25mm.
6. ALL ABOVE GROUND PIPES AND VALVES TO BE TRACED WITH SELF-REGULATING HEATING CABLE SYSTEM. HEAT TRACING CABLE SHALL BE TYCO 5XTV2 OR EQUAL WITH MINIMUM HEAT OUTPUT OF 12.5 WATT/M.
7. HEAT TRACING SYSTEM SHALL BE INSTALLED PER MANUFACTURER'S RECOMMENDATION.
8. THE DEPTH POSITION OF THE SECTIONS OF WELL SCREEN IS TO BE DETERMINED BY THE USAID IMPLEMENTING PARTNER AFTER THE WELL LOG IS COMPLETED IN ACCORDANCE WITH THE SPECIFICATIONS.

BID DOCUMENT SUBMITTAL

SYMB	DESCRIPTION	DATE	APR
	BID DOCUMENT SUBMITTAL	09/09/10	BRG
	100% DESIGN SUBMITTAL	07/06/10	BRG
	95% DESIGN SUBMITTAL	06/03/10	NJB

This project was made possible by the United States Agency for International Development and the generous support of the American People through USAID Global Architecture and Engineering IQC Contracts.

DESIGNED BY: EWK | DATE: 09/09/2010
DWN BY: EWK | SUBMITTED BY: TETRA TECH
CHK BY: BRG | FILE NO.: LT0005-C-09

USAID FROM THE AMERICAN PEOPLE

AESP

USAID - OIEE
GHAZI BOYS HIGH SCHOOL
WELL DETAILS
SHEET 1 OF 3

SHEET REFERENCE NUMBER:
LT0005 C-09.1

Z:\127-1298-10001\Work Orders\WO-LT\WO-LT-0005 GBHS Utility Design\CAD\Conceptual\Civil\DWG\WOLT05-C-009.1-009.2.dwg 9/9/2010 10:34:47 AM Harris, Jessica

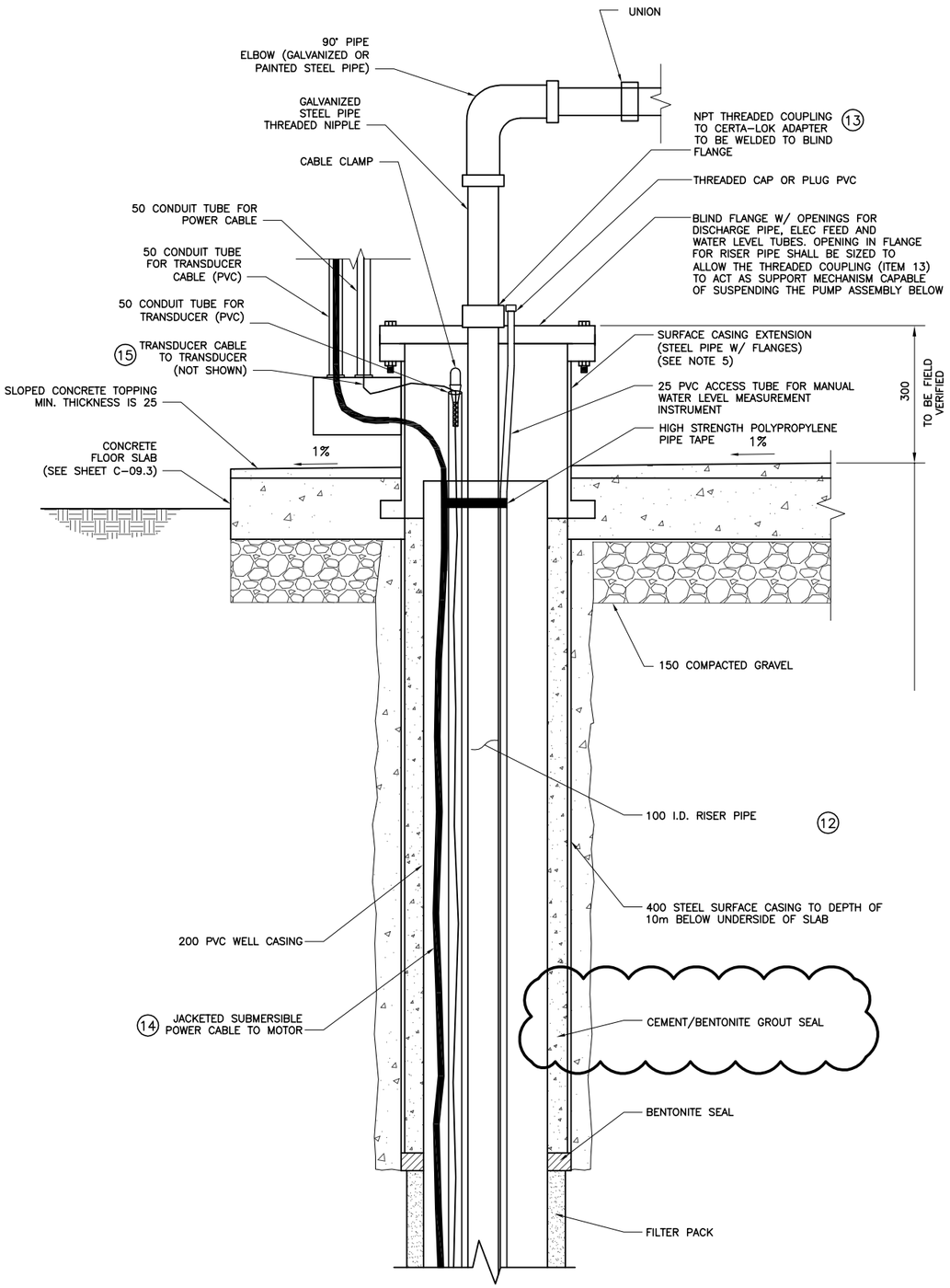

WELL HEAD DETAIL
N.T.S.

	SCHEDULE FOR TABLES C-09.1 AND C-09.2		QTY
1	SUBMERSIBLE ELECTRIC MOTOR	PUMP AND MOTOR TO BE DETERMINED BASED ON WELL TESTING	1
2	STAINLESS STEEL PUMP (6.25 L/S)	PUMP AND MOTOR TO BE DETERMINED BASED ON WELL TESTING	1
3	STAINLESS STEEL NPT THREADED NIPPLE	100, 300mm LENGTH	2
4	STAINLESS STEEL IN-LINE CHECK VALVE	100, POPPET STYLE, DOWN WELL	1
5	PLAIN STEEL CHECK VALVE	100, GLOBE STYLE, ABOVE GROUND	1
6	BALL VALVE AND HOSE BIB	BOTH 20	1
7	PRESSURE GAGE	0-2 KG/CM²	1
8	FLOWMETER	100 NPT, 10.5 LPS, INSTANTANEOUS AND TOTALIZING FLOW METER	1
9	BALL VALVE		1
10	COMBINATION AIR VACUUM VALVE	15mm NPT	1
11	BALL VALVE	100mm	1
12	100MM DIAMETER DROP PIPE: CERTAINTEED CERTA-LOK PVC, SCH 80 GALVANIZED STEEL, OR APPROVED EQUAL	30M	
13	CERTAINTEED CERTA-LOK DROP PIPE ADAPTER, STAINLESS STEEL, OR GALVANIZED STEEL AS APPLICABLE	CERTA-LOK TO 100mm NPT	2
14	JACKETED SUBMERSIBLE POWER CABLE	MANUFACTURERS RECOMMENDED CABLE FOR MOTOR LOAD AND LENGTH	1
15	TRANSDUCER AND VENTED CABLE		1

NOTES:

1. PIPE AND FITTINGS ABOVE GRADE MAY BE THREADED OR FLANGED STEEL 100mm I.D. (MINIMUM).
2. ALL PIPES BELOW GRADE SHALL BE SCH 40 PVC UNLESS OTHERWISE NOTED.
3. ALL EXPOSED NON-GALVANIZED METAL SURFACES TO BE PROTECTED WITH PAINT. FINISH COAT TO BE BLUE.
4. RISER PIPE SHALL BE 100mm I.D.
5. SIZE STEEL PIPE W/ FLANGES AS STEEL SURFACE CASING. CAST INTO CONCRETE FLOOR OF WELL PUMP SECURITY ENCLOSURE (SEE SHEET C-09.3).
6. PUMP ELEVATION TO BE DETERMINED BASED ON WELL TESTING.

UNLESS OTHERWISE NOTED, LINEAR DIMENSIONS SHOWN ARE IN MILLIMETERS.

This project was made possible by the United States Agency for International Development and the generous support of the American People through USAID Global Architecture and Engineering IQC Contracts.

BID DOCUMENT SUBMITTAL

SYMB	DESCRIPTION	DATE	
	BID DOCUMENT SUBMITTAL	09/09/10	BRG
	100% DESIGN SUBMITTAL	07/06/10	BRG
	95% DESIGN SUBMITTAL	06/03/10	NJB
			APR

DESIGNED BY: EWK
DWN BY: EWK
CHK BY: BRG
DATE: 09/09/2010
SUBMITTED BY: TETRA TECH
FILE NO.: LT0005-C-09

USAID FROM THE AMERICAN PEOPLE

AESP

USAID - OIEE
GHAZI BOYS HIGH SCHOOL
WELL DETAILS
SHEET 2 OF 3

SHEET REFERENCE NUMBER:
LT0005 C-09.2

Z:\127-1298-10001\Work Orders\WO-LT\WO-LT-0005 GBHS Utility Design\CAD\Conceptual\Civil\DWG\WOLT05-C-009.1-009.2.dwg 9/8/2010 11:52:01 AM Harris, Jessica

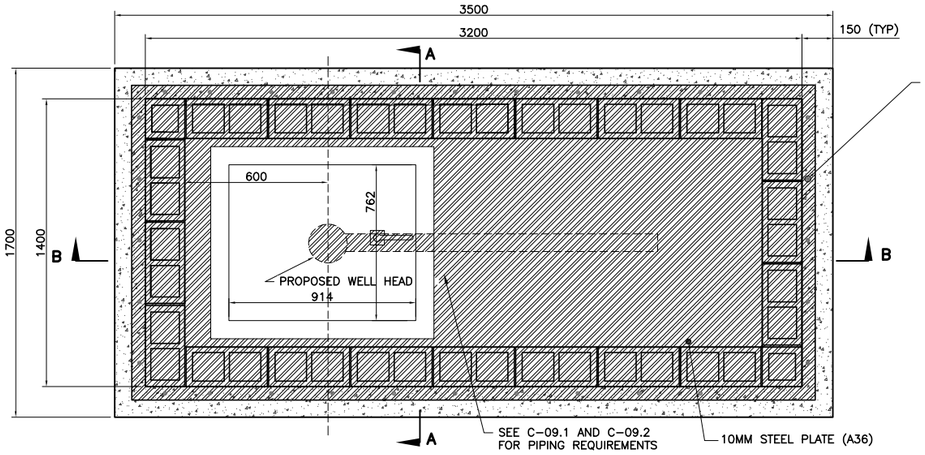

SECURITY ENCLOSURE PLAN VIEW
1:30

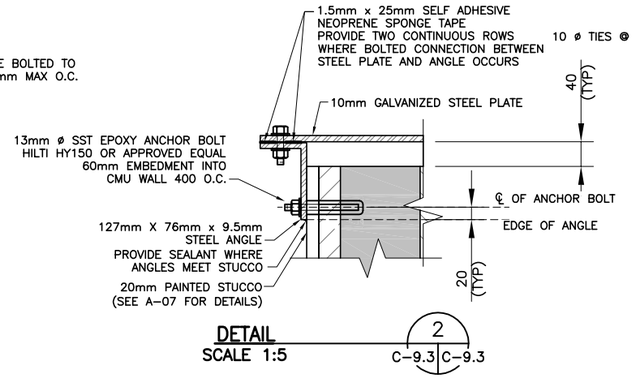

DETAIL 2 / SCALE 1:5 / C-9.3 | C-9.3

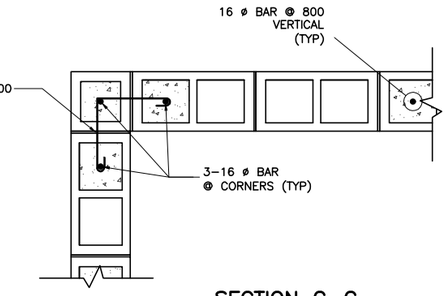

SECTION C-C
1:20

NOTE:

1. CELLS WITH VERTICAL REBAR & ANCHOR BOLTS TO BE FILLED WITH GROUT.

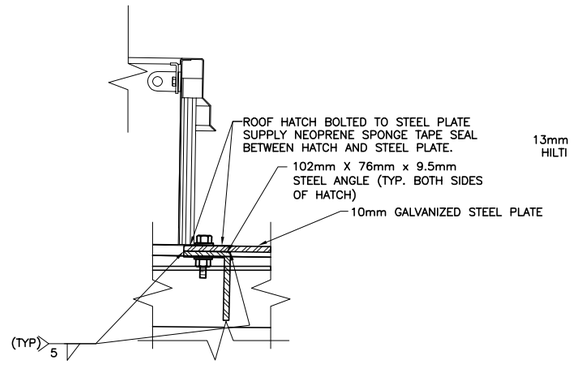

DETAIL 3 / SCALE 1:5 / C-9.3 | C-9.3

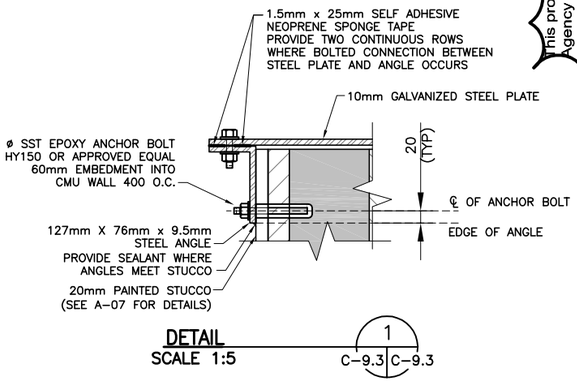

DETAIL 1 / SCALE 1:5 / C-9.3 | C-9.3

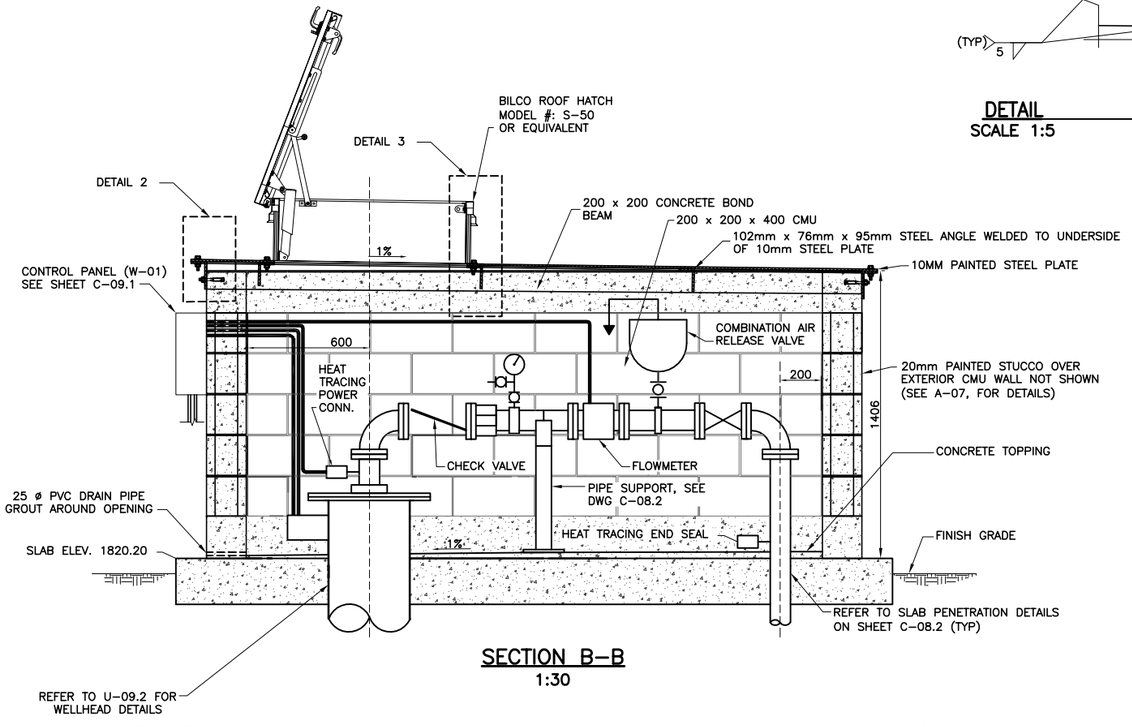

SECTION B-B
1:30

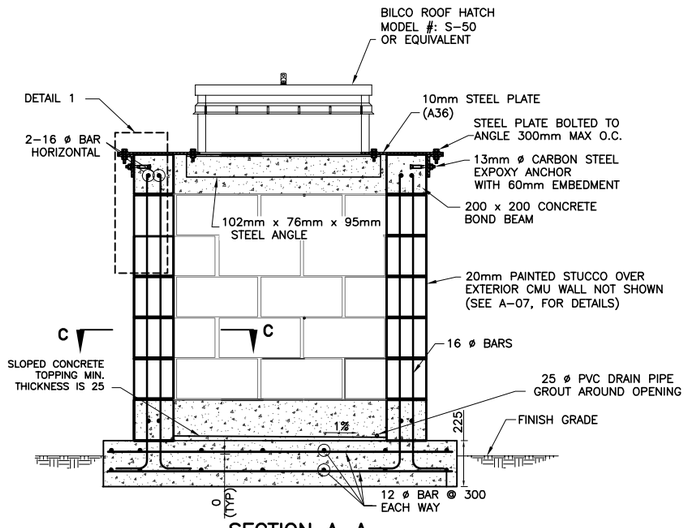

SECTION A-A
1:30

UNLESS OTHERWISE NOTED, LINEAR DIMENSIONS SHOWN ARE IN MILLIMETERS.

BID DOCUMENT SUBMITTAL

SYMB	DESCRIPTION	DATE	
	BID DOCUMENT SUBMITTAL	09/09/10	BRG
	REVISED WELL PUMP ENCLOSURE	09/09/10	BRG
	100% DESIGN SUBMITTAL	07/06/10	BRG
	95% DESIGN SUBMITTAL	06/03/10	NJB

This project was made possible by the United States Agency for International Development and the generous support of the American People through USAID Global Architecture and Engineering IQC Contracts.

DESIGNED BY: EWK
DWN BY: EWK
CHK BY: BRG
DATE: 09/09/2010
SUBMITTED BY: TETRA TECH
FILE NO: LT0005-C-09

USAID FROM THE AMERICAN PEOPLE

AESP

USAID - OIEE
GHAZI BOYS HIGH SCHOOL
WELL DETAILS
SHEET 3 OF 3

SHEET REFERENCE NUMBER:
LT0005
C-09.3

Z:\127-1298-10001\Work Orders\WO-LT\WO-LT-0005 GBHS Utility Design\CAD\Conceptual\Civil\DWG\WOLT05-C-09.3.dwg 9/8/2010 1:27:11 PM Harris, Jessica

P:\1298\Work Orders\WO-LT\WO-LT-0005 GBHS Utility Design\CAD\Conceptual\Civil\DWG\WOLT05-C-010.dwg 11/6/2010 2:59:23 PM Harris, Jessica

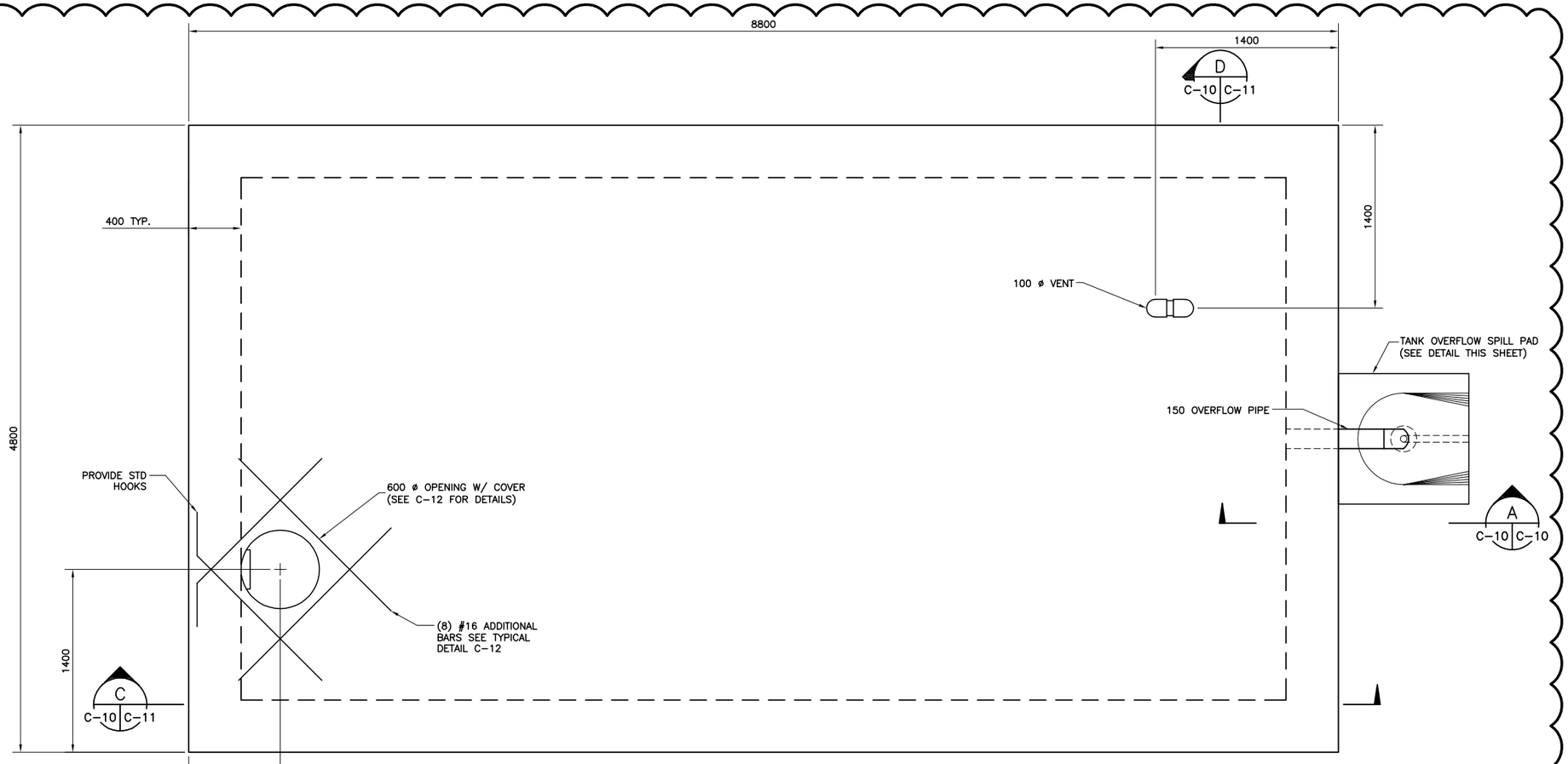

POTABLE WATER TANK PLAN
SCALE 1:40

NOTE: SEE CIVIL SHEETS FOR PIPING LOCATION AND CONFIGURATION

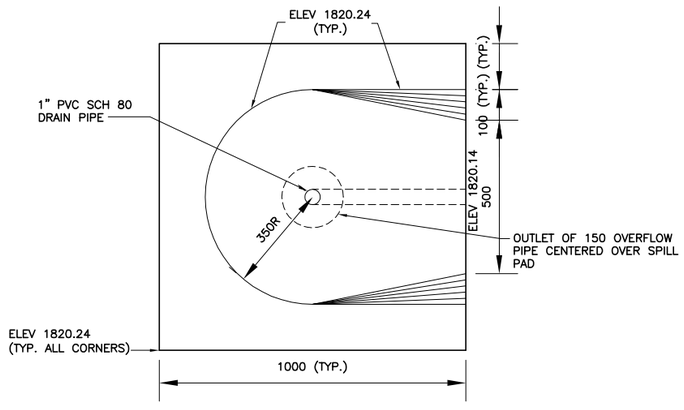

TANK OVERFLOW SPILL PAD PLAN
SCALE 1:20

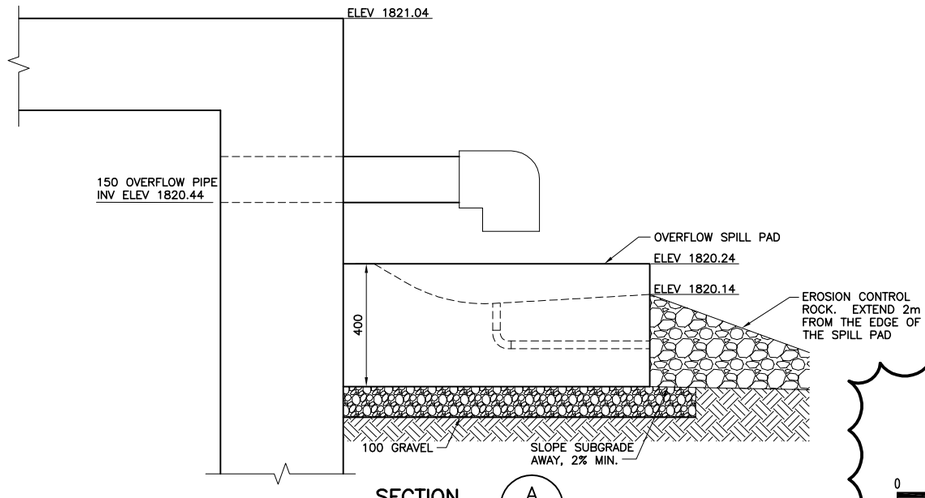

SECTION
SCALE 1:20
A
C-10 C-10

UNLESS OTHERWISE NOTED, LINEAR DIMENSIONS SHOWN ARE IN MILLIMETERS.

0 .25 .5 1 1.5 2
1:20

0 .5 1 2 3 4
1:40

N

BID DOCUMENT SUBMITTAL

This project was made possible by the United States Agency for International Development and the generous support of the American People through USAID Global Architecture and Engineering IQC Contracts.

SYMB	SUBMITTAL/REVISION DESCRIPTION	DATE	
4	ADDED OVERFLOW SPILL PAD	11/01/10	BRG
3	BID DOCUMENT SUBMITTAL	09/09/10	BRG
2	100% DESIGN SUBMITTAL	07/06/10	
1	95% DESIGN SUBMITTAL	05/28/10	APR

DESIGNED BY: JZ
DRAWN BY: AC
CHECKED BY: APL
DATE: 11/01/2010
SUBMITTED BY: TETRA TECH
CAD FILE NAME: WOLT05-C-010

USAID FROM THE AMERICAN PEOPLE

A E S P

USAID – OIEE
GHAZI BOYS HIGH SCHOOL (GBHS)

POTABLE WATER TANK PLAN

SHEET REFERENCE NUMBER:
LT0005
C-10

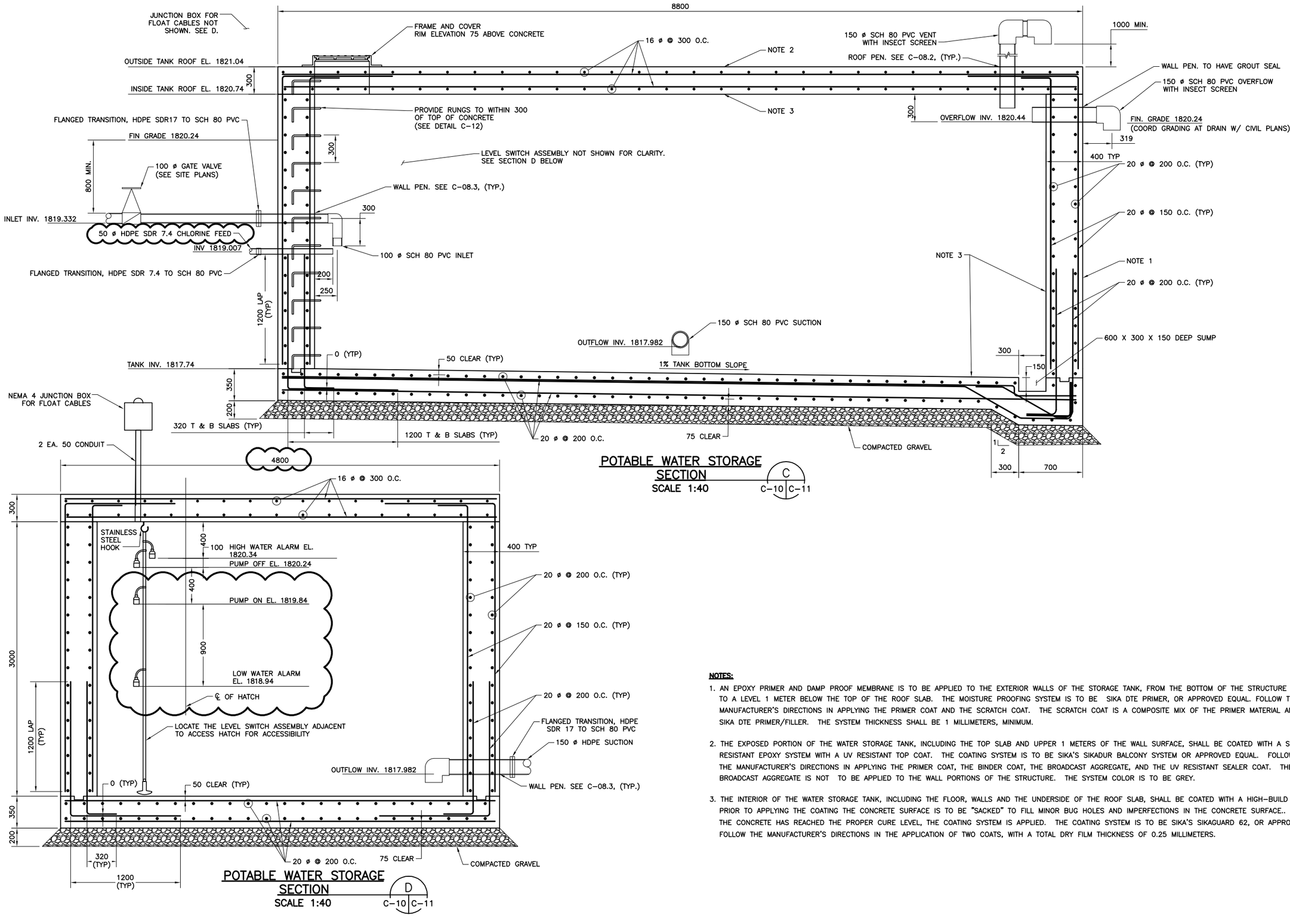

POTABLE WATER STORAGE SECTION
SCALE 1:40
C
C-10 | C-11

POTABLE WATER STORAGE SECTION
SCALE 1:40
D
C-10 | C-11

NOTES:

1. AN EPOXY PRIMER AND DAMP PROOF MEMBRANE IS TO BE APPLIED TO THE EXTERIOR WALLS OF THE STORAGE TANK, FROM THE BOTTOM OF THE STRUCTURE UP TO A LEVEL 1 METER BELOW THE TOP OF THE ROOF SLAB. THE MOISTURE PROOFING SYSTEM IS TO BE SIKA DTE PRIMER, OR APPROVED EQUAL. FOLLOW THE MANUFACTURER'S DIRECTIONS IN APPLYING THE PRIMER COAT AND THE SCRATCH COAT. THE SCRATCH COAT IS A COMPOSITE MIX OF THE PRIMER MATERIAL AND SIKA DTE PRIMER/FILLER. THE SYSTEM THICKNESS SHALL BE 1 MILLIMETERS, MINIMUM.

2. THE EXPOSED PORTION OF THE WATER STORAGE TANK, INCLUDING THE TOP SLAB AND UPPER 1 METERS OF THE WALL SURFACE, SHALL BE COATED WITH A SLIP RESISTANT EPOXY SYSTEM WITH A UV RESISTANT TOP COAT. THE COATING SYSTEM IS TO BE SIKA'S SIKADUR BALCONY SYSTEM OR APPROVED EQUAL. FOLLOW THE MANUFACTURER'S DIRECTIONS IN APPLYING THE PRIMER COAT, THE BINDER COAT, THE BROADCAST AGGREGATE, AND THE UV RESISTANT SEALER COAT. THE BROADCAST AGGREGATE IS NOT TO BE APPLIED TO THE WALL PORTIONS OF THE STRUCTURE. THE SYSTEM COLOR IS TO BE GREY.

3. THE INTERIOR OF THE WATER STORAGE TANK, INCLUDING THE FLOOR, WALLS AND THE UNDERSIDE OF THE ROOF SLAB, SHALL BE COATED WITH A HIGH-BUILD EPOXY. PRIOR TO APPLYING THE COATING THE CONCRETE SURFACE IS TO BE "SACKED" TO FILL MINOR BUG HOLES AND IMPERFECTIONS IN THE CONCRETE SURFACE.. AFTER THE CONCRETE HAS REACHED THE PROPER CURE LEVEL, THE COATING SYSTEM IS APPLIED. THE COATING SYSTEM IS TO BE SIKA'S SIKAGUARD 62, OR APPROVED EQUAL. FOLLOW THE MANUFACTURER'S DIRECTIONS IN THE APPLICATION OF TWO COATS, WITH A TOTAL DRY FILM THICKNESS OF 0.25 MILLIMETERS.

UNLESS OTHERWISE NOTED, LINEAR DIMENSIONS SHOWN ARE IN MILLIMETERS.

BID DOCUMENT SUBMITTAL

SYMB	DATE	DESCRIPTION
	09/09/10	BID DOCUMENT SUBMITTAL BRG
	09/09/10	MISCELLANEOUS WATER TANK MODIFICATIONS BRG
	07/06/10	100% DESIGN SUBMITTAL
	05/28/10	95% DESIGN SUBMITTAL APR

This project was made possible by the United States Agency for International Development and the generous support of the American People through USAID Global Architecture and Engineering IQC Contracts.

DESIGNED BY: JZ
DRAWN BY: AC
CHECKED BY: APL
DATE: 09/09/2010
SUBMITTED BY: TETRA TECH
CAD FILE NAME: WOLT05-C-011

USAID FROM THE AMERICAN PEOPLE

AESP

USAID - OIEE
GHAZI BOYS HIGH SCHOOL (GBHS)

POTABLE WATER TANK SECTIONS

SHEET REFERENCE NUMBER:
LT0005
C-11

Z:\127-1298-10001\Work Orders\WO-LT\WO-LT-0005 GBHS Utility Design\CAD\Conceptual\Civil\DWG\WOLT05-C-011.dwg 9/8/2010 1:39:52 PM Harris, Jessica

NOTES:

GENERAL

1.) THE GBHS POTABLE WATER STORAGE TANK HAS BEEN DESIGNED IN ACCORDANCE WITH:

- A.) ACI 350-06 SPECIFICATION FOR POTABLE WATER STORAGE.
- B.) ACI 318-08 SPECIFICATION FOR GRAY WATER STORAGE.
- C.) PCA RECTANGULAR CONCRETE TANK.
- D.) SEISMIC DESIGN PER 2002 SPECIFICATIONS OF THE AMERICAN ASSOCIATION OF STATE HIGHWAY AND TRANSPORTATION OFFICIALS WITH CURRENT INTERIM SPECIFICATIONS (AASHTO).

2.) ALL DIMENSIONS AND CONDITIONS MUST BE VERIFIED BY THE CONTRACTOR IN THE FIELD AND ANY DISCREPANCIES SHALL BE BROUGHT TO THE ATTENTION OF THE ENGINEER BEFORE PROCEEDING WITH THE AFFECTED PORTION OF THE WORK.

3.) STRUCTURAL DRAWINGS SHALL BE USED IN CONJUNCTION WITH JOB SPECIFICATIONS.

4.) LOADING:

- A.) LIVE LOAD ON ROOF SLAB 4.79kPa [100PSF]
- B.) SEISMIC: Ss= 1.13g
  S1= 0.53g
  SITE CLASS D
  IMPORTANCE FACTOR I = 1.0

5.) THE FOLLOWING GEOTECHNICAL PROPERTIES WERE USED FOR DESIGN BASED ON STRUCTURAL FILL. CONTRACTOR NEEDS TO VERIFY THE GEOTECHNICAL PROPERTIES AND NOTIFY THE ENGINEER OF ANY DIFFERENCES:

- A.) UNIT WEIGHT OF SOIL: 1842 Kg/M^3 [115 PCF]
- B.) ALLOWABLE BEARING PRESSURE: 71.82 kPa [1500 PSF]
- C.) ACTIVE EARTH PRESSURE COEFFICIENT: Ka=0.30
- D.) PASSIVE EARTH PRESSURE COEFFICIENT: Kp=3.0
- E.) AT REST PRESSURE COEFFICIENT: Ka=0.5
- F.) GROUND WATER IS ASSUMED TO BE 1500mm BELOW GRADE. CONTRACTOR NEEDS TO VERIFY THAT THE WATER TABLE IS NOT ABOVE THIS LEVEL. IF IT IS ABOVE THIS LEVEL, NOTIFY THE ENGINEER PRIOR TO CONSTRUCTION.

6.) STORAGE TANK FLOOR SLAB SHALL BE PLACED ON NATURAL UNDISTURBED SOIL OR ON COMPACTED SELECT FILL PREPARED AS FOLLOWS:

- A.) REMOVE UNSUITABLE MATERIAL BELOW THE FOOTING AND REPLACE WITH COMPACTED SELECT FILL TO A DEPTH WHERE NATURAL SOIL AND OR COMPACT FILL IS ENCOUNTERED.
- B.) FILL MATERIAL MUST BE PLACED IN LIFTS UP TO A MAXIMUM OF 150mm IN THICKNESS. EACH LIFT COMPACTED TO A MINIMUM OF 95% OF THE MAXIMUM DRY DENSITY AS DETERMINED BY ASTM D1557.

7.) SUBGRADE PREPARATION SHALL BE PERFORMED IN THE DRY. DEWATERING MAY BE REQUIRED FOR CONSTRUCTION. THE CONTRACTOR SHALL SUBMIT A DEWATERING PLAN TO THE ENGINEER FOR REVIEW.

8.) ALL UNSUITABLE MATERIAL SHALL BE REMOVED WITHIN THE LIMITS OF THE STRUCTURE.

9.) MAINTAIN LEVEL OF BACKFILL WITHIN ONE FOOT ON THE OPPOSITE SIDE OF THE TANK WHILE BACKFILLING. STOP BACKFILL AT MINIMUM 1500mm BELOW GRADE AND POUR THE ROOF SLAB, OR DO NOT BACKFILL AGAINST WALLS UNTIL THE ROOF SLAB IS IN PLACE.

10.) ALL PVC WATERSTOPS TO BE 150mm PVC TIP. TYPE 0, 5mm THICK (3 RIBS)

CONCRETE

1.) STRUCTURAL CONCRETE SHALL BE NORMAL WEIGHT CONCRETE HAVING A MINIMUM STRENGTH OF 27.14 MPA (4000 PSI) AT 28 DAYS. CONCRETE SHALL BE CONTROLLED CONCRETE MIX WITH A WATER/CEMENT RATIO OF 0.45 (A)

2.) REINFORCING STEEL SHALL HAVE A YIELD STRENGTH OF 4218 Kg/cm2. AND CONFORM TO ASTM 615-60 SPECIFICATIONS.

3.) REINFORCING BARS, IN SLABS, SHALL BE LAPPED IN ACCORDANCE WITH ACI CODE REQUIREMENTS OR AS DETAILED ON THE DRAWING. REINFORCING BARS LAP SPLICES SHALL BE AS FOLLOWS:

- A.) 25 ø BARS LAP 1800mm
- B.) 20 ø BARS LAP 1200mm
- C.) 16 ø BARS LAP 920mm
- D.) 14 ø BARS LAP 800mm
- E.) 12 ø BARS LAP 690mm

4.) ALL EXPOSED CONCRETE EDGES SHALL HAVE A 25mm CHAMFER.

5.) PROTECTIVE CONCRETE COVER FOR REINFORCEMENT:

- A.) CONCRETE PLACED AGAINST EARTH, 75mm.
- B.) FORMED CONCRETE WALLS, 50mm.
- C.) PROVIDE 50mm CONCRETE COVER UNLESS NOTED OTHERWISE.

6.) SEE SPECIFICATIONS FOR TRANSPORTING, PLACING AND CURING CAST-IN-PLACE CONCRETE.

7.) ALL EMBEDDED ITEMS TO BE PLACED AND SECURED BEFORE CONCRETE PLACEMENT. NO "WET SETTING" OF EMBEDDED ITEMS WILL BE ALLOWED.

NOTES CON'T:

STEEL

1.) STRUCTURAL STEEL SHAPES AND PLATES SHALL BE ASTM A36M (Fy=250MPa).

2.) STRUCTURAL STEEL PIPE SHALL BE ASTM A53M, TYPE S, GRADE B (Fy=240MPa).

3.) ALL STRUCTURAL STEEL SHALL BE HOT-DIP GALVANIZED IN ACCORDANCE WITH ASTM A123M, OR PAINTED AS PER SPECIFICATIONS.

4.) STEEL ANCHORS SHALL BE HILTI KWIK BOLT II EXPANSION ANCHORS OR APPROVED EQUIVALENT. ANCHOR BOLTS SHALL BE GALVANIZED IN ACCORDANCE WITH ASTM A123M.

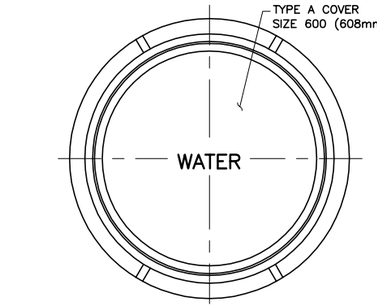

PLAN

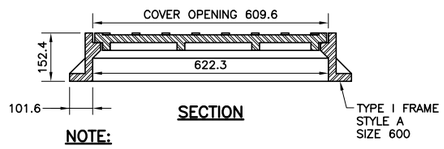

SECTION

NOTE:

FRAME INSTALLED BY SEATING IN A 1:2 GROUT MIX. JOINT SHALL NOT BE LESS THAN 20mm IN THICKNESS.

FRAME & COVER DETAIL
N.T.S.

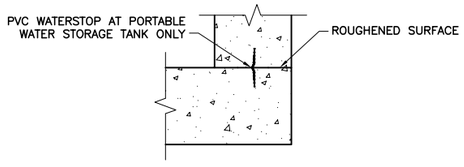

TYPICAL CONNECTION DETAIL
SCALE 1:10

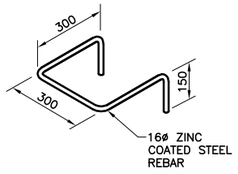

LADDER RUNG
N.T.S.

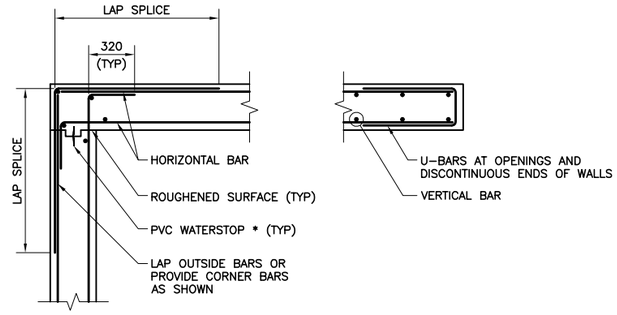

AT CORNERS AT ENDS

NOTE

* USE PVC WATERSTOP AT PORTABLE WATER STORAGE TANK (ONLY)

TYPICAL WALL HORIZONTAL REINFORCING DETAILS
SCALE 1:20

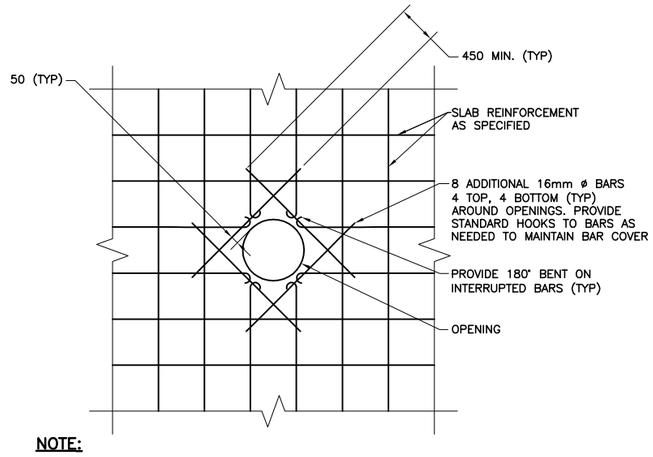

NOTE:

ALL TOP AND BOTTOM SLAB BARS INTERRUPTED BY OPENING SHALL BE REPLACED BY ADDITIONAL REINFORCING EQUAL TO THAT INTERRUPTED. PLACE HALF OF THE ADDITIONAL REINFORCING ON EACH SIDE OF OPENING AND EXTEND SAME LENGTH AS REQUIRED FOR BAR LAP OF INTERRUPTED REINFORCING

REINFORCING AROUND STRUCTURAL SLAB AND WALL OPENINGS & RE-ENTRANT CORNERS
N.T.S.

UNLESS OTHERWISE NOTED, LINEAR DIMENSIONS SHOWN ARE IN MILLIMETERS.

This project was made possible by the United States Agency for International Development and the generous support of the American People through USAID Global Architecture and Engineering IQC Contracts.

BID DOCUMENT SUBMITTAL

SYMB	DESCRIPTION	DATE	APR
	COORD. CONCRETE STRENGTH W/ DWG S-01.1	11/01/10	BRG
	BID DOCUMENT SUBMITTAL	09/09/10	BRG
	100% DESIGN SUBMITTAL	07/06/10	
	95% DESIGN SUBMITTAL	05/28/10	

SUBMITTAL/REVISION

DESIGNED BY: JZ
DRAWN BY: AC
CHECKED BY: APL
DATE: 11/01/2010
SUBMITTED BY: TETRA TECH
CAD FILE NAME: WOLT05-C-012

USAID FROM THE AMERICAN PEOPLE

AESP

USAID - OIEE
GHAZI BOYS HIGH SCHOOL (GBHS)

POTABLE WATER TANK NOTES AND DETAILS

SHEET REFERENCE NUMBER:
LT0005
C-12

P:\1298\Work Orders\WO-LT\WO-LT-0005 GBHS Utility Design\CAD\Conceptual\Civil\DWG\WOLT05-C-012.dwg 11/6/2010 3:00:02 PM Harris, Jessica

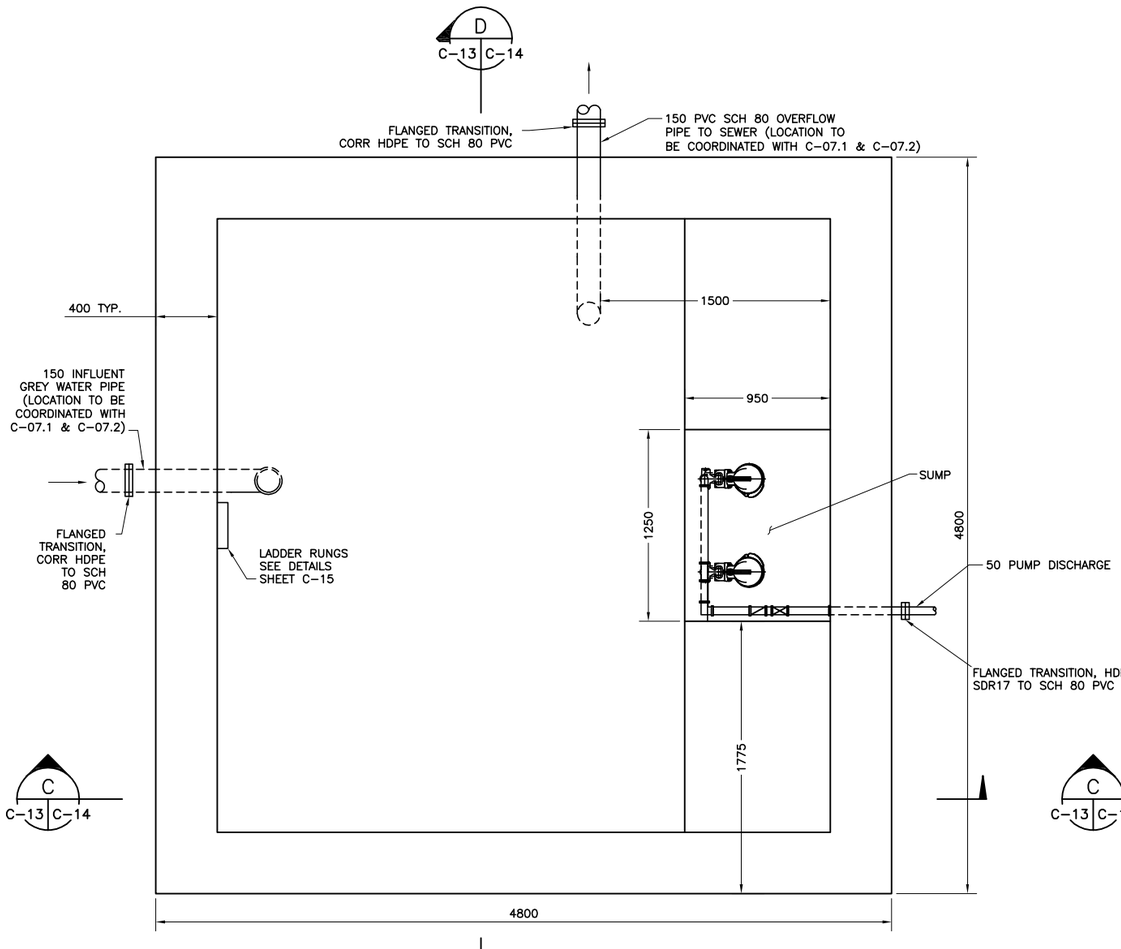

GREY WATER STORAGE TANK
FLOOR PLAN
SCALE 1:40

NOTE: SEE C-07.1 & C-07.2 FOR PIPING LOCATION AND CONFIGURATION

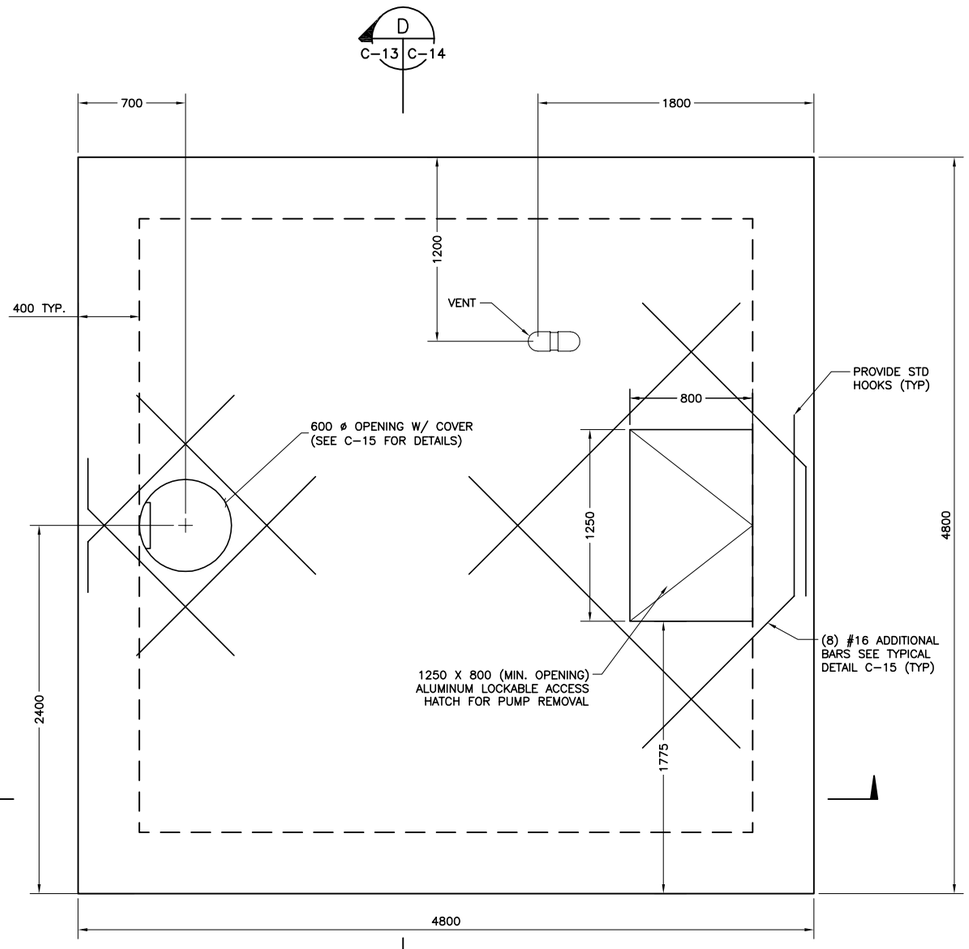

GREY WATER STORAGE TANK
ROOF PLAN
SCALE 1:40

UNLESS OTHERWISE NOTED, LINEAR DIMENSIONS SHOWN ARE IN MILLIMETERS.

0 .5 1 2 3 4
1:40

BID DOCUMENT SUBMITTAL

SYMB	SUBMITTAL/REVISION DESCRIPTION	DATE	APR
	BID DOCUMENT SUBMITTAL	09/09/10	BRG
0	100% DESIGN SUBMITTAL	07/06/10	
A	95% DESIGN SUBMITTAL	05/28/10	

This project was made possible by the United States Agency for International Development and the generous support of the American People through USAID Global Architecture and Engineering IQC Contracts.

DESIGNED BY: JZ
DRAWN BY: AC
CHECKED BY: APL
DATE: 09/09/2010
SUBMITTED BY: TETRA TECH
CAD FILE NAME: WOLT05-C-013

USAID FROM THE AMERICAN PEOPLE

AESP

USAID – OIEE
GHAZI BOYS HIGH SCHOOL (GBHS)

GREYWATER TANK PLANS

SHEET REFERENCE NUMBER:
LT0005
C-13

Z:\127-1298-10001\Work Orders\WO-LT\WO-LT-0005 GBHS Utility Design\CAD\Conceptual\Civil\DWG\WOLT05-C-013.dwg 9/8/2010 1:45:11 PM Harris, Jessica

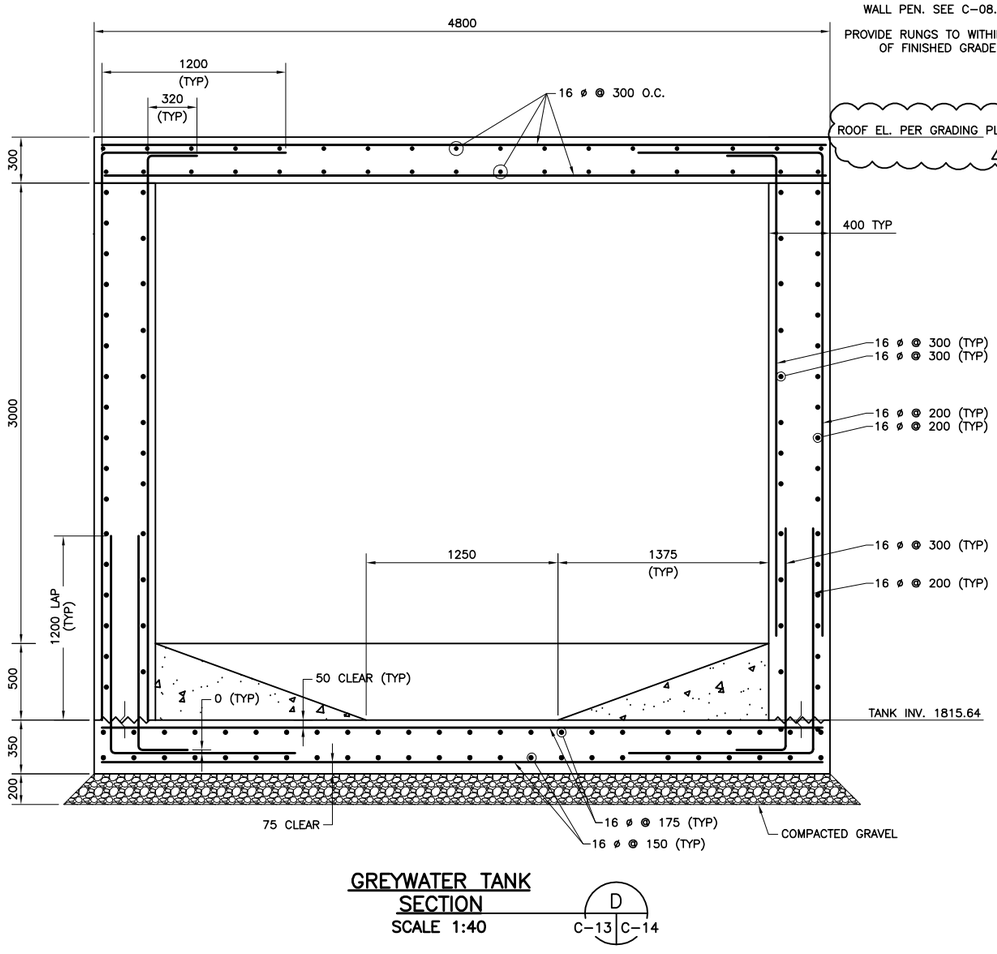

GREYWATER TANK SECTION
SCALE 1:40
D C-13 | C-14

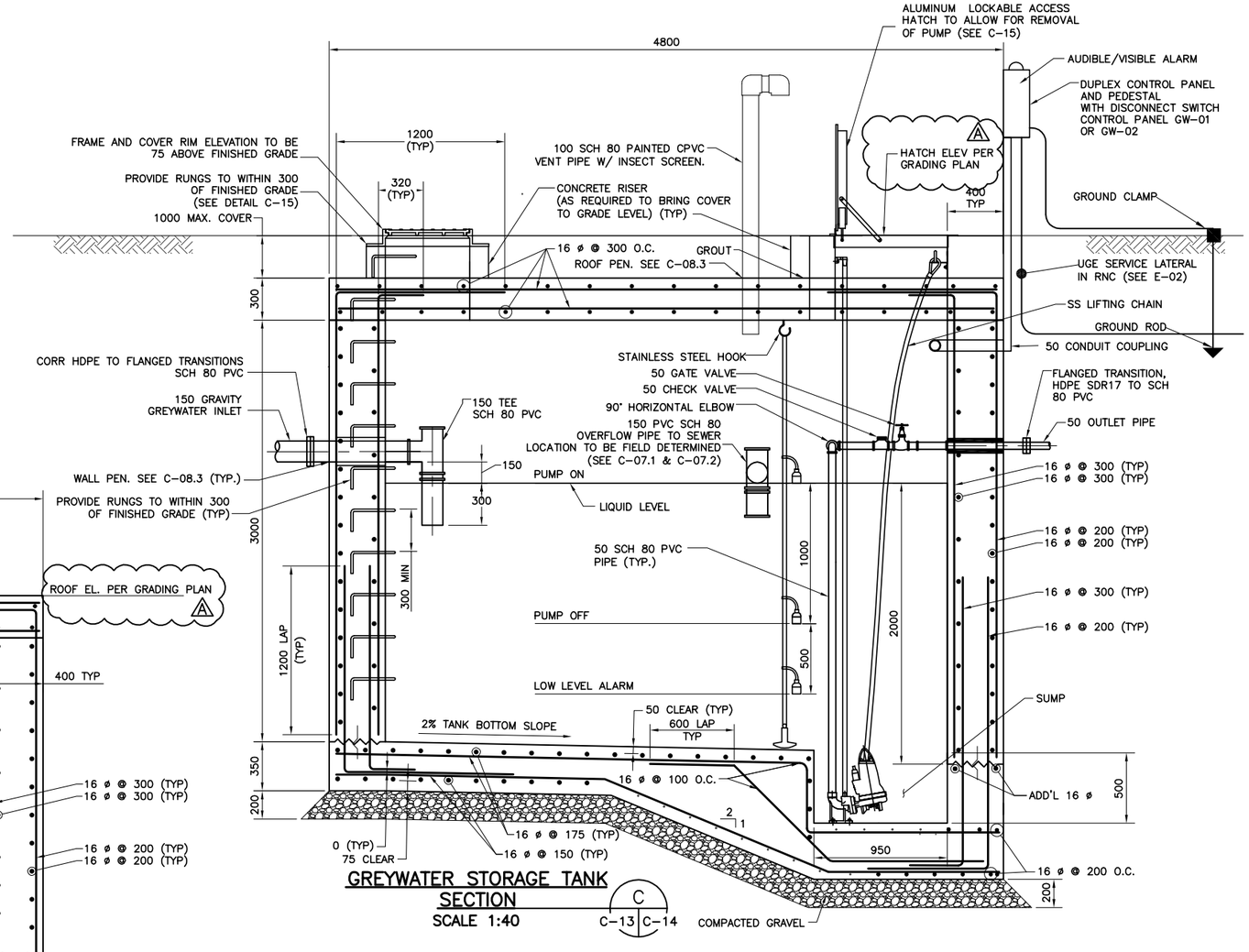

GREYWATER STORAGE TANK SECTION
SCALE 1:40
C C-13 | C-14

GREYWATER PUMP SCHEDULE

NO. REQ.D	TYPE	RATING POINT			MIN. DISCH SIZE	TYPE SEAL	MOTOR						DRIVE TYPE
		CAP. l/s (GPM)	MIN. HEAD m (FT.)	MIN. EFF.			VOLTAGE	PHASE	WIRE	HZ	HP	ENCL	
2	GRINDER	2.35 (37.25)	14.6 (47.9)	30%	40mm	TANDEM MECH.	380	3	3	50	3	X PROOF	DIRECT

NOTE: SEE C-07.1 & C-07.2 FOR INLET, OUTLET FORCE MAIN, AND OVERFLOW INVERTS

UNLESS OTHERWISE NOTED, LINEAR DIMENSIONS SHOWN ARE IN MILLIMETERS.

ADDENDUM 2 SUBMITTAL

	DATE	BY
MISCELLANEOUS TANK MODS	12/22/10	BRG
BID DOCUMENT SUBMITTAL	09/09/10	BRG
100% DESIGN SUBMITTAL	07/06/10	
95% DESIGN SUBMITTAL	05/28/10	APR
SUBMITTAL/REVISION DESCRIPTION	DATE	SYMB

This project was made possible by the United States Agency for International Development and the generous support of the American People through USAID Global Architecture and Engineering IQC Contracts.

DESIGNED BY: JZ
DRAWN BY: AC
CHECKED BY: APL
DATE: 12/22/10
SUBMITTED BY: TETRA TECH
CAD FILE NAME: WOLT05-C-014

USAID FROM THE AMERICAN PEOPLE

AESP

USAID – OIEE
GHAZI BOYS HIGH SCHOOL (GBHS)

GREYWATER TANK SECTIONS

SHEET REFERENCE NUMBER:
C-14

P:\1298\Work Orders\WO-LT\WO-LT-0005 GBHS Utility Design\CAD\Conceptual\Civil\DWG\WOLT05-C-014.dwg 12/22/2010 6:14:22 PM Safdi, Ahmad Shekib

NOTES:

GENERAL

1.) THE GBHS GRAY WATER STORAGE TANK HAS BEEN DESIGNED IN ACCORDANCE WITH:

- A.) ACI 350-06 SPECIFICATION FOR POTABLE WATER STORAGE.
- B.) ACI 318-08 SPECIFICATION FOR GRAY WATER STORAGE.
- C.) PCA RECTANGULAR CONCRETE TANK.
- D.) SEISMIC DESIGN PER 2002 SPECIFICATIONS OF THE AMERICAN ASSOCIATION OF STATE HIGHWAY AND TRANSPORTATION OFFICIALS WITH CURRENT INTERIM SPECIFICATIONS (AASHTO).

2.) ALL DIMENSIONS AND CONDITIONS MUST BE VERIFIED BY THE CONTRACTOR IN THE FIELD AND ANY DISCREPANCIES SHALL BE BROUGHT TO THE ATTENTION OF THE ENGINEER BEFORE PROCEEDING WITH THE AFFECTED PORTION OF THE WORK.

3.) STRUCTURAL DRAWINGS SHALL BE USED IN CONJUNCTION WITH JOB SPECIFICATIONS.

4.) LOADING:

- A.) LIVE LOAD ON ROOF SLAB 4.79kPa [100PSF]
- B.) SEISMIC: Ss= 1.13g
  S1= 0.53g
  SITE CLASS D
  IMPORTANCE FACTOR I = 1.0

5.) THE FOLLOWING GEOTECHNICAL PROPERTIES WERE USED FOR DESIGN BASED ON STRUCTURAL FILL. CONTRACTOR NEEDS TO VERIFY THE GEOTECHNICAL PROPERTIES AND NOTIFY THE ENGINEER OF ANY DIFFERENCES:

- A.) UNIT WEIGHT OF SOIL: 1842 Kg/M^3 [115 PCF]
- B.) ALLOWABLE BEARING PRESSURE: 71.82 kPa [1500 PSF]
- C.) ACTIVE EARTH PRESSURE COEFFICIENT: Ka=0.30
- D.) PASSIVE EARTH PRESSURE COEFFICIENT: Kp=3.0
- E.) AT REST PRESSURE COEFFICIENT: Ka=0.5
- F.) GROUND WATER IS ASSUMED TO BE 1500mm BELOW GRADE. CONTRACTOR NEEDS TO VERIFY THAT THE WATER TABLE IS NOT ABOVE THIS LEVEL. IF IT IS ABOVE THIS LEVEL, NOTIFY THE ENGINEER PRIOR TO CONSTRUCTION.

6.) STORAGE TANK FLOOR SLAB SHALL BE PLACED ON NATURAL UNDISTURBED SOIL OR ON COMPACTED SELECT FILL PREPARED AS FOLLOWS:

- A.) REMOVE UNSUITABLE MATERIAL BELOW THE FOOTING AND REPLACE WITH COMPACTED SELECT FILL TO A DEPTH WHERE NATURAL SOIL AND OR COMPACT FILL IS ENCOUNTERED.
- B.) FILL MATERIAL MUST BE PLACED IN LIFTS UP TO A MAXIMUM OF 150mm IN THICKNESS. EACH LIFT COMPACTED TO A MINIMUM OF 95% OF THE MAXIMUM DRY DENSITY AS DETERMINED BY ASTM D1557.

7.) SUBGRADE PREPARATION SHALL BE PERFORMED IN THE DRY. DEWATERING MAY BE REQUIRED FOR CONSTRUCTION. THE CONTRACTOR SHALL SUBMIT A DEWATERING PLAN TO THE ENGINEER FOR REVIEW.

8.) ALL UNSUITABLE MATERIAL SHALL BE REMOVED WITHIN THE LIMITS OF THE STRUCTURE.

9.) MAINTAIN LEVEL OF BACKFILL WITHIN ONE FOOT ON THE OPPOSITE SIDE OF THE TANK WHILE BACKFILLING. STOP BACKFILL AT MINIMUM 1500mm BELOW GRADE AND POUR THE ROOF SLAB, OR DO NOT BACKFILL AGAINST WALLS UNTIL THE ROOF SLAB IS IN PLACE.

10.) ALL PVC WATERSTOPS TO BE 150mm PVC TIP. TYPE 0, 5mm THICK (3 RIBS)

CONCRETE

1.) STRUCTURAL CONCRETE SHALL BE NORMAL WEIGHT CONCRETE HAVING A MINIMUM STRENGTH OF 27.14 MPA (4000 PSI) AT 28 DAYS. CONCRETE SHALL BE CONTROLLED CONCRETE MIX WITH A WATER/CEMENT RATIO OF 0.45 (A)

2.) REINFORCING STEEL SHALL HAVE A YIELD STRENGTH OF 4218 Kg/cm2. AND CONFORM TO ASTM 615-60 SPECIFICATIONS.

3.) REINFORCING BARS, IN SLABS, SHALL BE LAPPED IN ACCORDANCE WITH ACI CODE REQUIREMENTS OR AS DETAILED ON THE DRAWING. REINFORCING BARS LAP SPLICES SHALL BE AS FOLLOWS:

- A.) 25 ø BARS LAP 1800mm
- B.) 20 ø BARS LAP 1200mm
- C.) 16 ø BARS LAP 920mm
- D.) 14 ø BARS LAP 800mm
- E.) 12 ø BARS LAP 690mm

4.) ALL EXPOSED CONCRETE EDGES SHALL HAVE A 25mm CHAMFER.

5.) PROTECTIVE CONCRETE COVER FOR REINFORCEMENT:

- A.) CONCRETE PLACED AGAINST EARTH, 75mm.
- B.) FORMED CONCRETE WALLS, 50mm.
- C.) PROVIDE 50mm CONCRETE COVER UNLESS NOTED OTHERWISE.

6.) SEE SPECIFICATIONS FOR TRANSPORTING, PLACING AND CURING CAST-IN-PLACE CONCRETE.

7.) ALL EMBEDDED ITEMS TO BE PLACED AND SECURED BEFORE CONCRETE PLACEMENT. NO "WET SETTING" OF EMBEDDED ITEMS WILL BE ALLOWED.

NOTES CON'T:

STEEL

1.) STRUCTURAL STEEL SHAPES AND PLATES SHALL BE ASTM A36M (Fy=250MPa).

2.) STRUCTURAL STEEL PIPE SHALL BE ASTM A53M, TYPE S, GRADE B (Fy=240MPa).

3.) ALL STRUCTURAL STEEL SHALL BE HOT-DIP GALVANIZED IN ACCORDANCE WITH ASTM A123M, OR PAINTED AS PER SPECIFICATIONS.

4.) STEEL ANCHORS SHALL BE HILTI KWIK BOLT II EXPANSION ANCHORS OR APPROVED EQUIVALENT. ANCHOR BOLTS SHALL BE GALVANIZED IN ACCORDANCE WITH ASTM A123M.

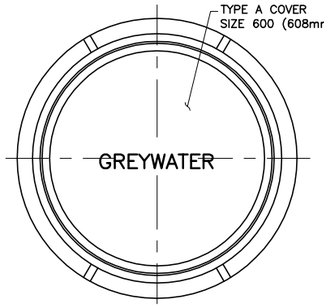

PLAN

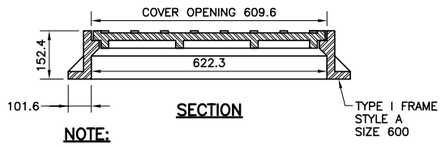

SECTION

NOTE:

FRAME INSTALLED BY SEATING IN A 1:2 GROUT MIX. JOINT SHALL NOT BE LESS THAN 20mm IN THICKNESS.

FRAME & COVER DETAIL
N.T.S.

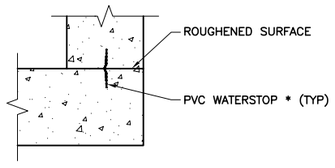

TYPICAL CONNECTION DETAIL
SCALE 1:10

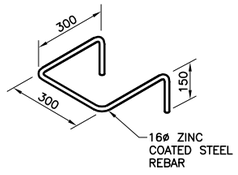

LADDER RUNG
N.T.S.

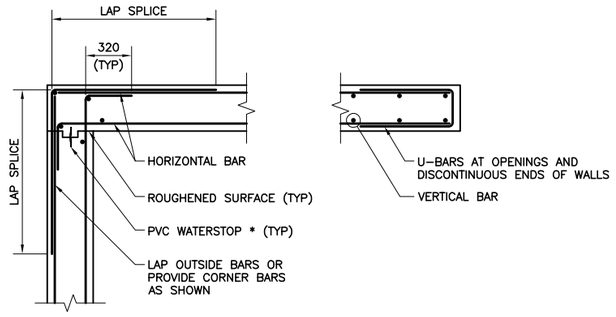

AT CORNERS AT ENDS

NOTE

* USE PVC WATERSTOP AT PORTABLE WATER STORAGE TANK (ONLY)

TYPICAL WALL HORIZONTAL REINFORCING DETAILS
SCALE 1:20

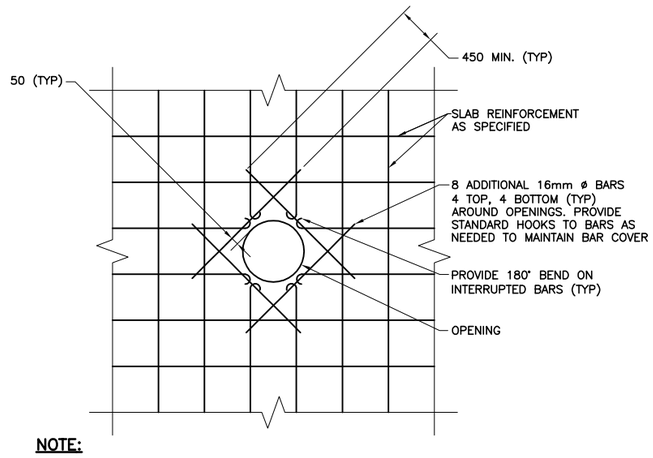

NOTE:

ALL TOP AND BOTTOM SLAB BARS INTERRUPTED BY OPENING SHALL BE REPLACED BY ADDITIONAL REINFORCING EQUAL TO THAT INTERRUPTED. PLACE HALF OF THE ADDITIONAL REINFORCING ON EACH SIDE OF OPENING AND EXTEND SAME LENGTH AS REQUIRED FOR BAR LAP OF INTERRUPTED REINFORCING

REINFORCING AROUND STRUCTURAL SLAB AND WALL OPENINGS & RE-ENTRANT CORNERS
N.T.S.

UNLESS OTHERWISE NOTED, LINEAR DIMENSIONS SHOWN ARE IN MILLIMETERS.

BID DOCUMENT SUBMITTAL

This project was made possible by the United States Agency for International Development and the generous support of the American People through USAID Global Architecture and Engineering IQC Contracts.

SYMB	DESCRIPTION	DATE	APR
1	COORD. CONCRETE STRENGTH W/ DWG S-01.1	11/01/10	BRG
	BID DOCUMENT SUBMITTAL	09/09/10	BRG
	100% DESIGN SUBMITTAL	07/04/10	
	95% DESIGN SUBMITTAL	05/28/10	

DESIGNED BY: JZ
DRAWN BY: AC
CHECKED BY: APL
DATE: 11/01/2010
SUBMITTED BY: TETRA TECH
CAD FILE NAME: WOLT05-C-015

USAID FROM THE AMERICAN PEOPLE

AESP

USAID – OIEE
GHAZI BOYS HIGH SCHOOL (GBHS)

GREYWATER TANK
NOTES AND DETAILS

SHEET REFERENCE NUMBER:
LT0005
C-15

P:\1298\Work Orders\WO-LT\WO-LT-0005 GBHS Utility Design\CAD\Conceptual\Civil\DWG\WOLT05-C-015.dwg 11/6/2010 3:00:46 PM Harris, Jessica

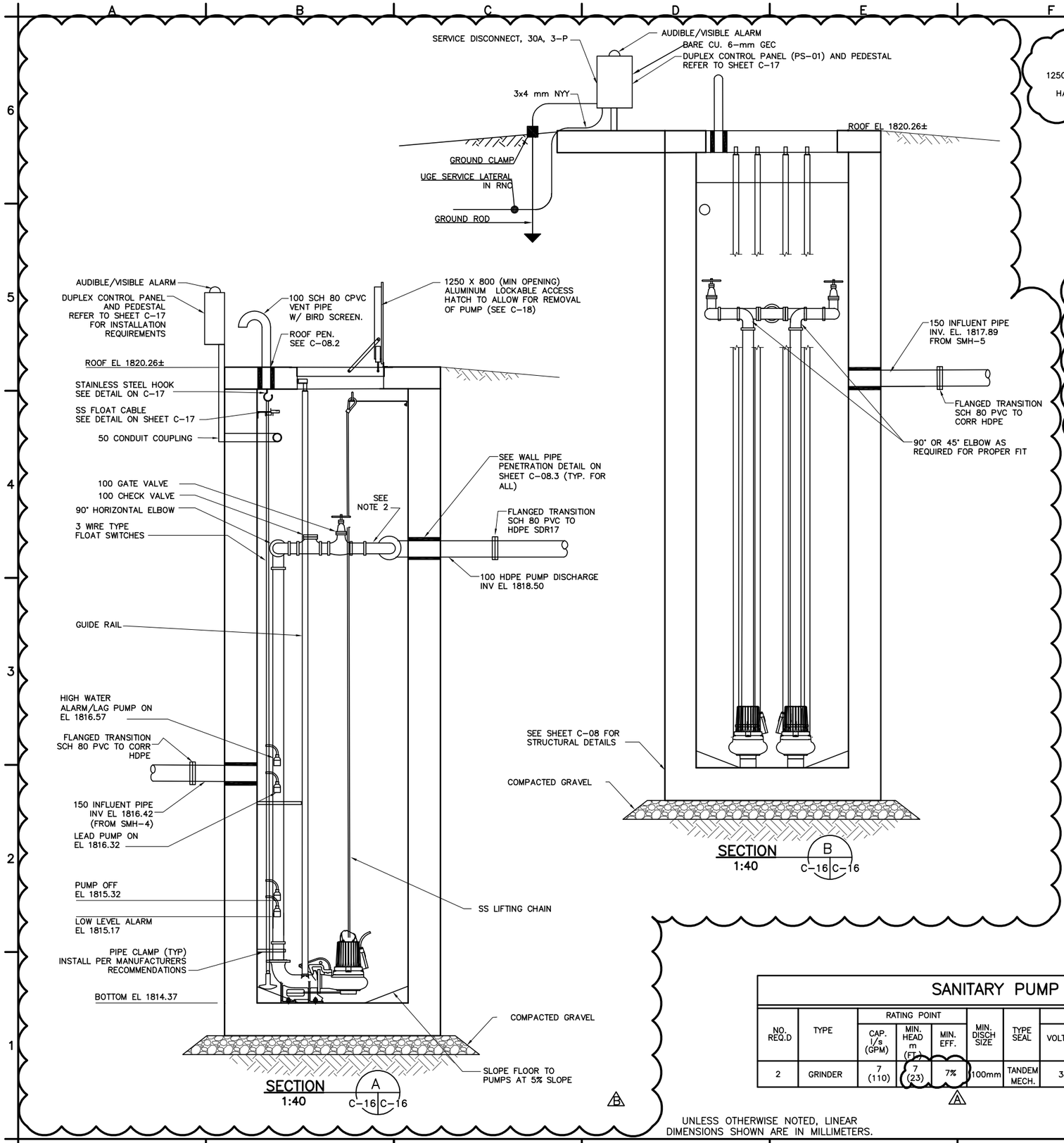

SANITARY PUMP SCHEDULE

NO. REQ.D	TYPE	RATING POINT			MIN. DISCH SIZE	TYPE SEAL	MOTOR						DRIVE TYPE
		CAP. l/s (GPM)	MIN. HEAD m (FT)	MIN. EFF.			VOLTAGE	PHASE	WIRE	HZ	HP	ENCL	
2	GRINDER	7 (110)	7 (23)	7%	100mm	TANDEM MECH.	380	3	3	50	3	X PROOF	DIRECT

NOTE:

1. SEE SHEET C-18 FOR STRUCTURAL DETAILS
2. ALL PIPES, VALVES, AND FITTINGS INSIDE STATION TO BE SCH. 80 PVC SOLVENT WELD

UNLESS OTHERWISE NOTED, LINEAR DIMENSIONS SHOWN ARE IN MILLIMETERS.

BID DOCUMENT SUBMITTAL

SYMB	DESCRIPTION	DATE	
A	DEEPENING SEWER FOR ADMIN. BLDG. CONN.	11/01/10	BRG
A	BID DOCUMENT SUBMITTAL	09/09/10	BRG
	MISCELLANEOUS PUMP STATION REVISIONS	09/09/10	BRG
	100% DESIGN SUBMITTAL	07/06/10	BRG
	95% DESIGN SUBMITTAL	06/03/10	NJB

This project was made possible by the United States Agency for International Development and the generous support of the American People through USAID Global Architecture and Engineering IQC Contracts.

DESIGNED BY: EWK | DATE: 11/01/2010
DWN BY: EWK | SUBMITTED BY: TETRA TECH
CHK BY: NJB | FILE NO.: LT0005-C-16

USAID FROM THE AMERICAN PEOPLE

AESP

USAID – OIEE
GHAZI BOYS HIGH SCHOOL
SANITARY PUMP STATION

SHEET REFERENCE NUMBER:
LT0005 C-16

P:\1298\Work Orders\WO-LT\WO-LT-0005 GBHS Utility Design\CAD\Conceptual\Civil\DWG\WOLT05-C-016.dwg 11/6/2010 3:01:31 PM Harris, Jessica

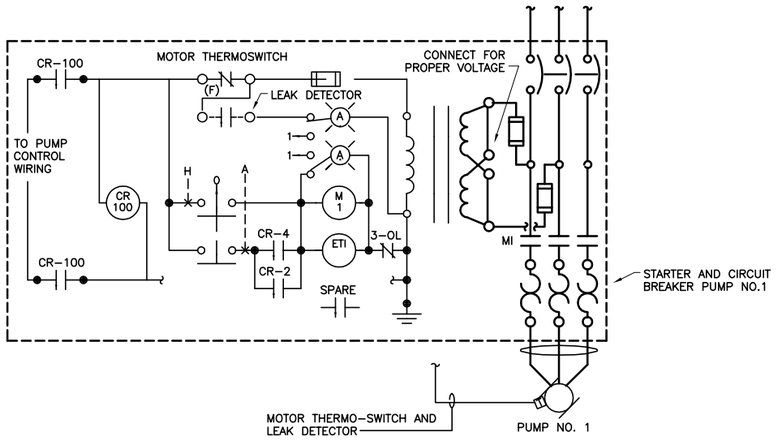

POWER WIRING DIAGRAM
PUMP NO. 1

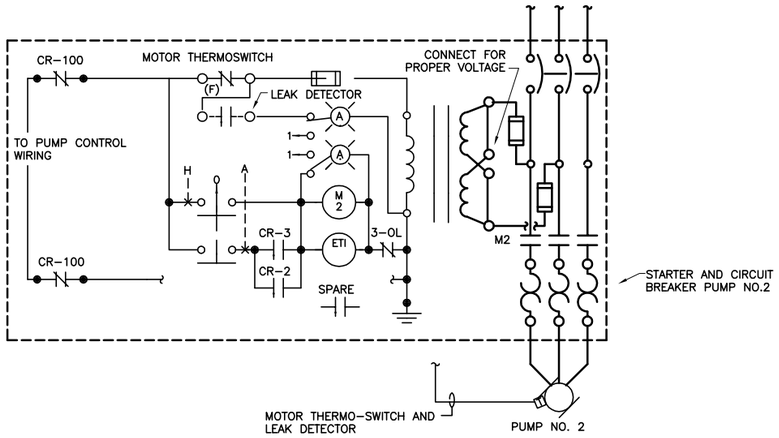

POWER WIRING DIAGRAM
PUMP NO. 2

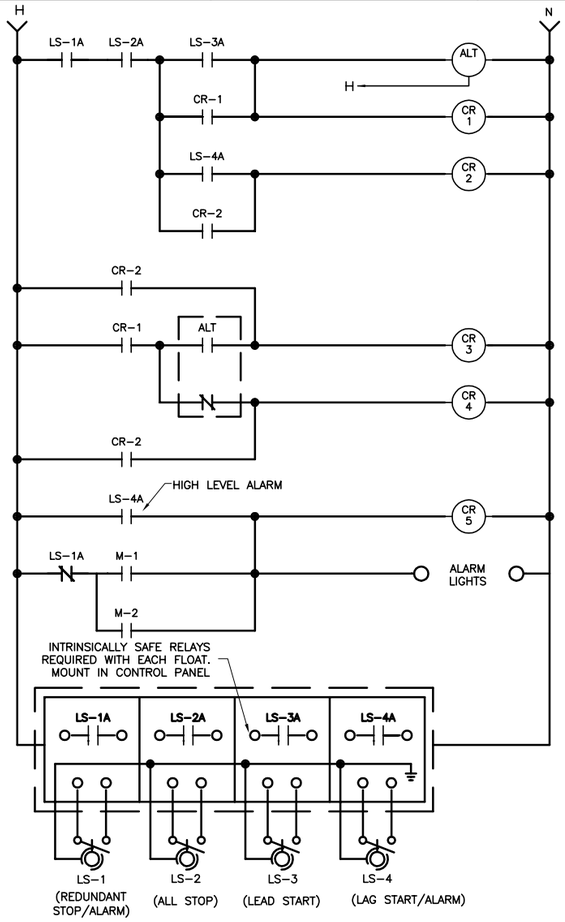

PUMP CONTROL WIRING
(BY STATION MANUFACTURER)

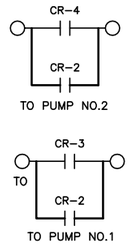

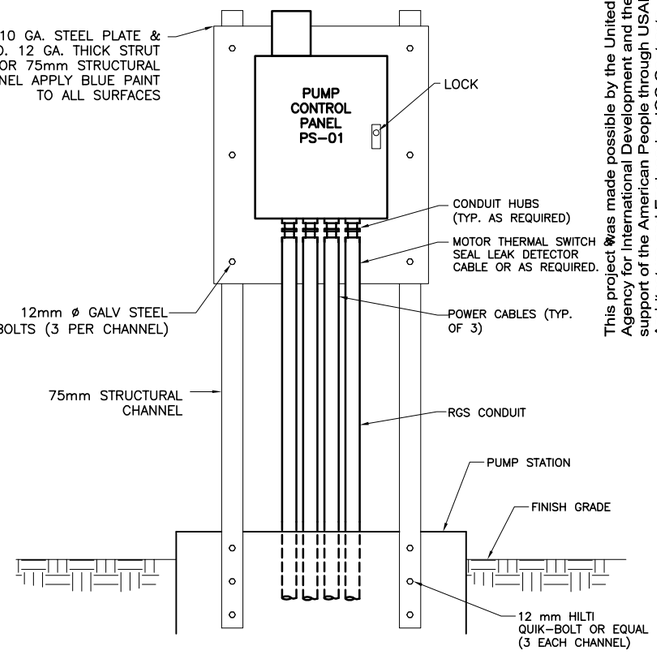

RACK MOUNTED EQUIPMENT DETAIL
N.T.S.

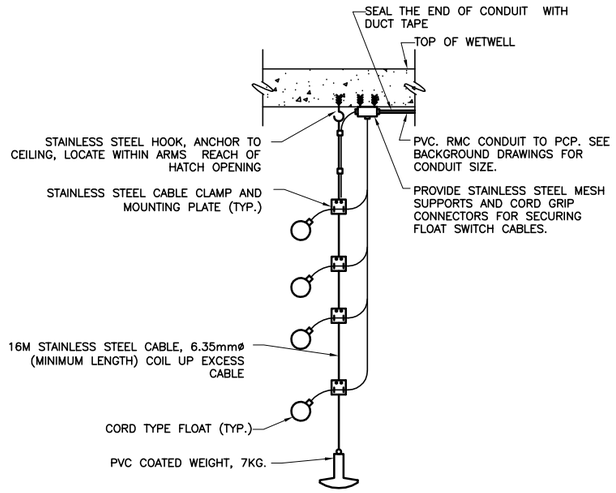

SUBMERSIBLE LEVEL SENSOR DETAIL

UNLESS OTHERWISE NOTED, LINEAR DIMENSIONS SHOWN ARE IN MILLIMETERS.

BID DOCUMENT SUBMITTAL

SYMB	DESCRIPTION	DATE	APR
	BID DOCUMENT SUBMITTAL	09/09/10	BRG
	100% DESIGN SUBMITTAL	07/06/10	BRG
	95% DESIGN SUBMITTAL	06/03/10	NJB

This project was made possible by the United States Agency for International Development and the generous support of the American People through USAID Global Architecture and Engineering IQC Contracts.

DESIGNED BY: ML
DWN BY: EWK
CHK BY: BRG
DATE: 09/09/2010
SUBMITTED BY: TETRA TECH
FILE NO.: LT0005-C-17

USAID FROM THE AMERICAN PEOPLE
AESP

USAID - OIEE
GHAZI BOYS HIGH SCHOOL
SANITARY PUMP STATION
CONTROL PANEL DIAGRAM

SHEET REFERENCE NUMBER:
LT0005
C-17

Z:\127-1298-10001\Work Orders\WO-LT\WO-LT-0005 GBHS Utility Design\CAD\Conceptual\Civil\DWG\WOLT05-C-017.dwg 9/8/2010 2:13:10 PM Harris, Jessica

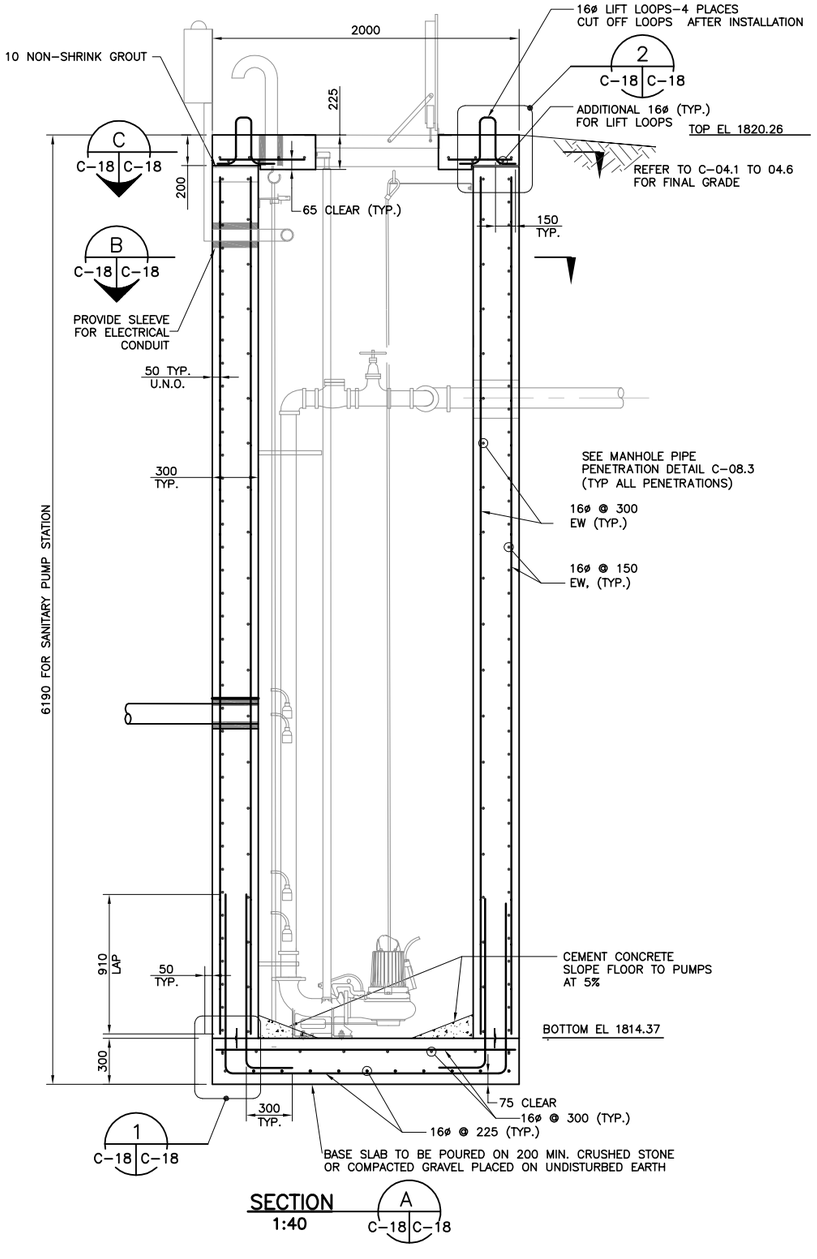

SECTION
1:40
A
C-18 C-18

SANITARY PUMP STATION DETAILS
(CAST-IN-PLACE)

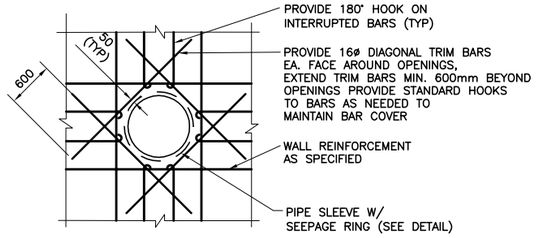

NOTE: PROVIDE ADDITIONAL REINFORCING EQUAL TO BARS INTERRUPTED, 1/2 EACH SIDE, ADDITIONAL BARS TO BE IN SAME PLANE.

REINFORCING AROUND WALL PENETRATION
N.T.S.

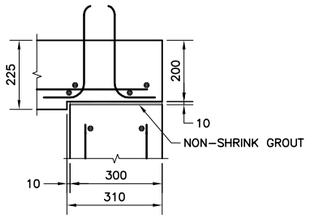

DETAIL
SCALE 1:20
2
C-18 C-18

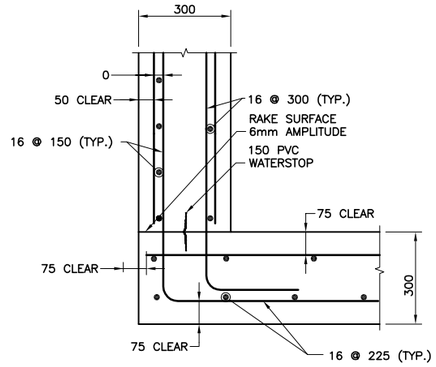

DETAIL
SCALE 1:20
1
C-18 C-18

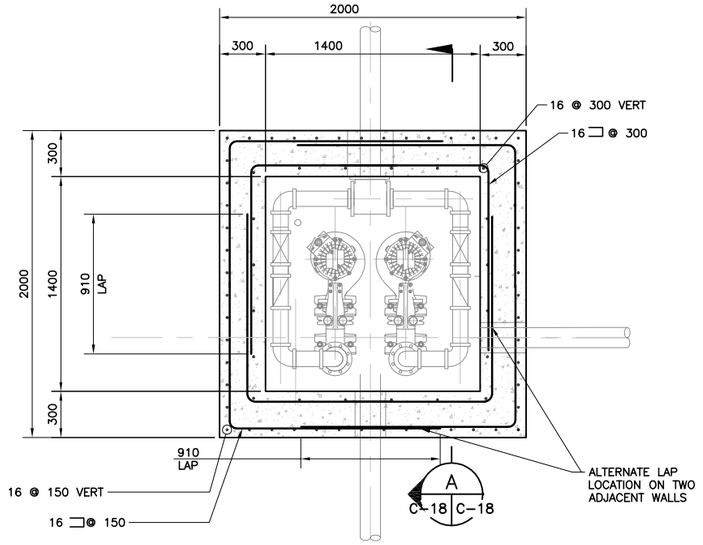

A
C-18 C-18

SANITARY PUMP STATION PLAN
1:40
B
C-18 C-18

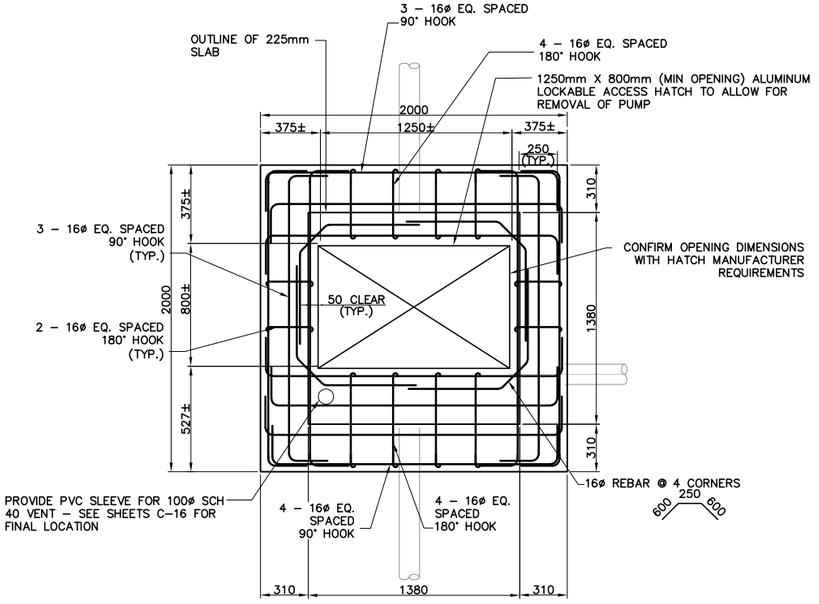

TOP SLAB REINFORCEMENT PLAN
SCALE 1:40
C
C-18 C-18

NOTES:

FOR CONCRETE AND REINFORCEMENT INFORMATION SEE DRAWING C-15

UNLESS OTHERWISE NOTED, LINEAR DIMENSIONS SHOWN ARE IN MILLIMETERS.

BID DOCUMENT SUBMITTAL

This project was made possible by the United States Agency for International Development and the generous support of the American People through USAID Global Architecture and Engineering IQC Contracts.

SYMB	DESCRIPTION	DATE	
	DEEPENING SEWER FOR ADMIN. BLDG. CONN.	11/01/10	BRG
2	BID DOCUMENT SUBMITTAL	09/09/10	BRG
	100% DESIGN SUBMITTAL	07/06/10	BRG
	95% DESIGN SUBMITTAL	06/03/10	NJB

DESIGNED BY: EWK
DWN BY: EWK
CHK BY: BRG
DATE: 11/01/2010
SUBMITTED BY: TETRA TECH
FILE NO.: LT0005-C-18

USAID FROM THE AMERICAN PEOPLE

AESP

USAID – OIEE
GHAZI BOYS HIGH SCHOOL
SANITARY PUMP STATION
DETAILS

SHEET REFERENCE NUMBER:
LT0005 C-18

P:\1298\Work Orders\WO-LT\WO-LT-0005 GBHS Utility Design\CAD\Conceptual\Civil\DWG\WOLT05-C-018.dwg 11/6/2010 3:02:24 PM Harris, Jessica

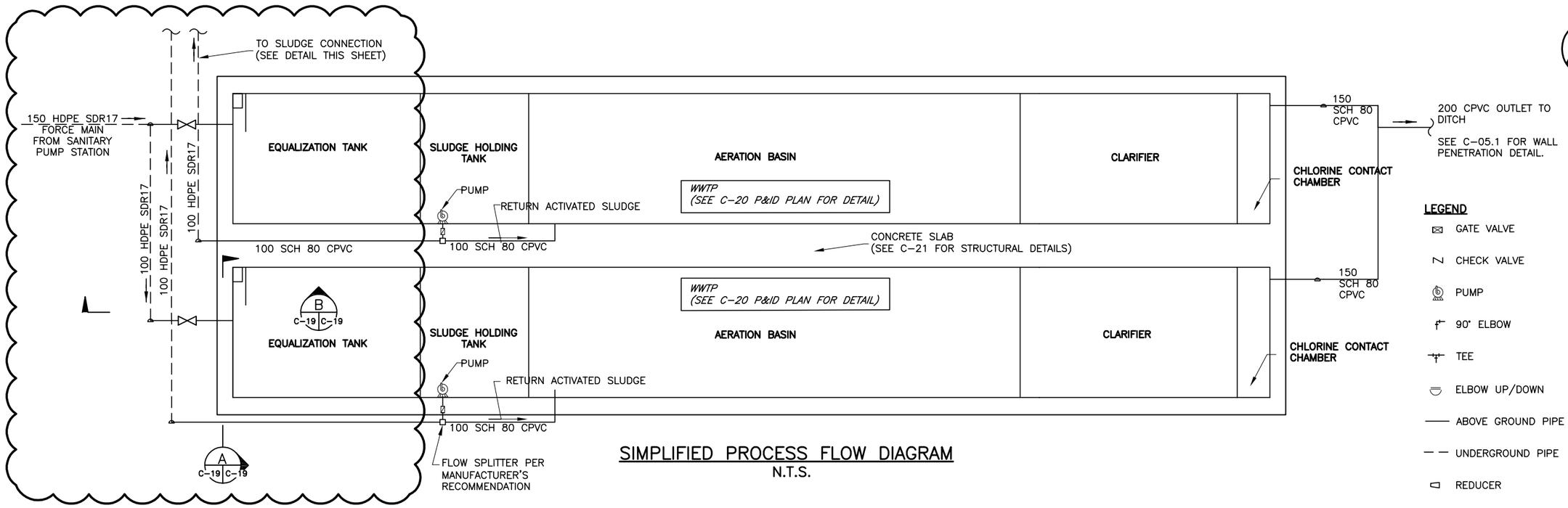

SIMPLIFIED PROCESS FLOW DIAGRAM
N.T.S.

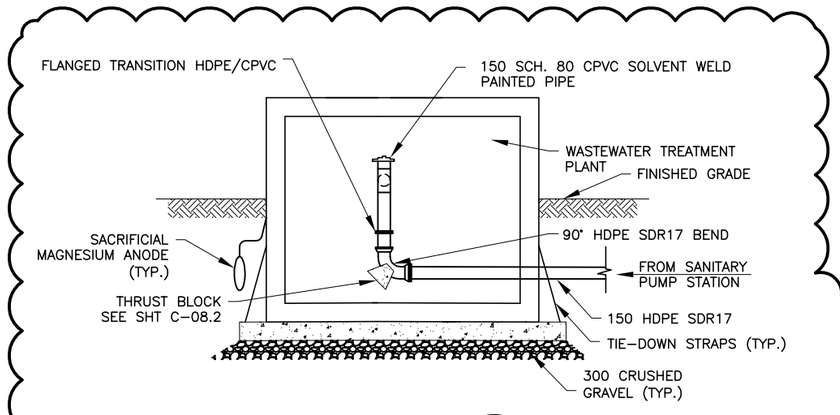

SECTION A
N.T.S.

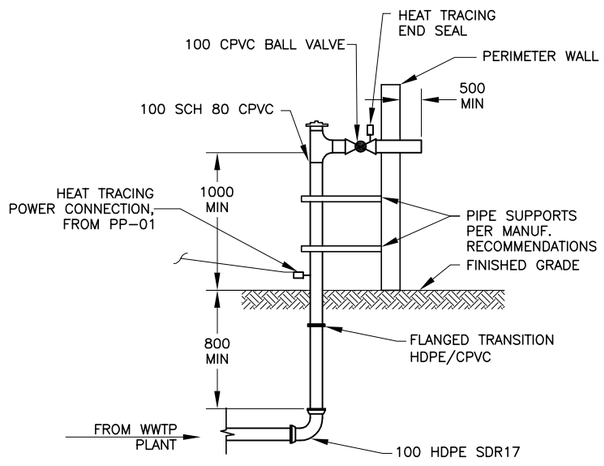

SLUDGE CONNECTION DETAIL (2 REQ'D)
N.T.S.

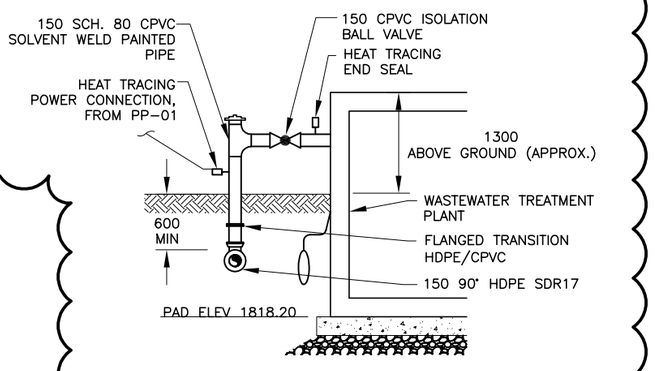

SECTION B
N.T.S.

NOTES:

1. FINAL WASTE WATER TREATMENT PLANT CONFIGURATION SHALL BE AS PER MANUFACTURER.
2. ALL ABOVE GROUND PIPING TO BE SCH 80 CPVC, AND FITTED WITH FREEZE PROTECTION EQUIPMENT (IF PIPE COULD REMAIN FILLED WITH SEWAGE OR SLUDGE UNDER NORMAL OPERATING CONDITIONS).
3. EQUIPMENT IS TO INCLUDE 25mm FOAMED ELASTOMER INSULATION, HEAT TRACING (SELF REGULATING CABLE, 12.5 watt/m, TYCO 5XTV2 OR EQUAL), AND ALUMINUM JACKET (0.6mm THICKNESS).
4. POWER FOR THE HEAT TRACING SYSTEMS SHALL BE FROM PP-01

UNLESS OTHERWISE NOTED, LINEAR DIMENSIONS SHOWN ARE IN MILLIMETERS.

BID DOCUMENT SUBMITTAL

SYMB	DESCRIPTION	DATE	
	BID DOCUMENT SUBMITTAL	09/09/10	BRG
	PARTIAL BURY OF WWTP	09/09/10	BRG
	100% DESIGN SUBMITTAL	07/06/10	BRG
	95% DESIGN SUBMITTAL	06/03/10	NJB
			APR

This project was made possible by the United States Agency for International Development and the generous support of the American People through USAID Global Architecture and Engineering IQC Contracts.

DESIGNED BY: NJB
DATE: 09/09/2010
DWN BY: EWK
SUBMITTED BY: TETRA TECH
CHK BY: BRG
FILE NO.: LT0005-C-19

USAID FROM THE AMERICAN PEOPLE

AESP

USAID - OIEE
GHAZI BOYS HIGH SCHOOL
WASTEWATER TREATMENT
PLANT LAYOUT

SHEET REFERENCE NUMBER:
LT0005 C-19

Z:\127-1298-10001\Work Orders\WO-LT\WO-LT-0005 GBHS Utility Design\CAD\Conceptual\Civil\DWG\WOLT05-C-019.dwg 9/8/2010 2:20:02 PM Harris, Jessica

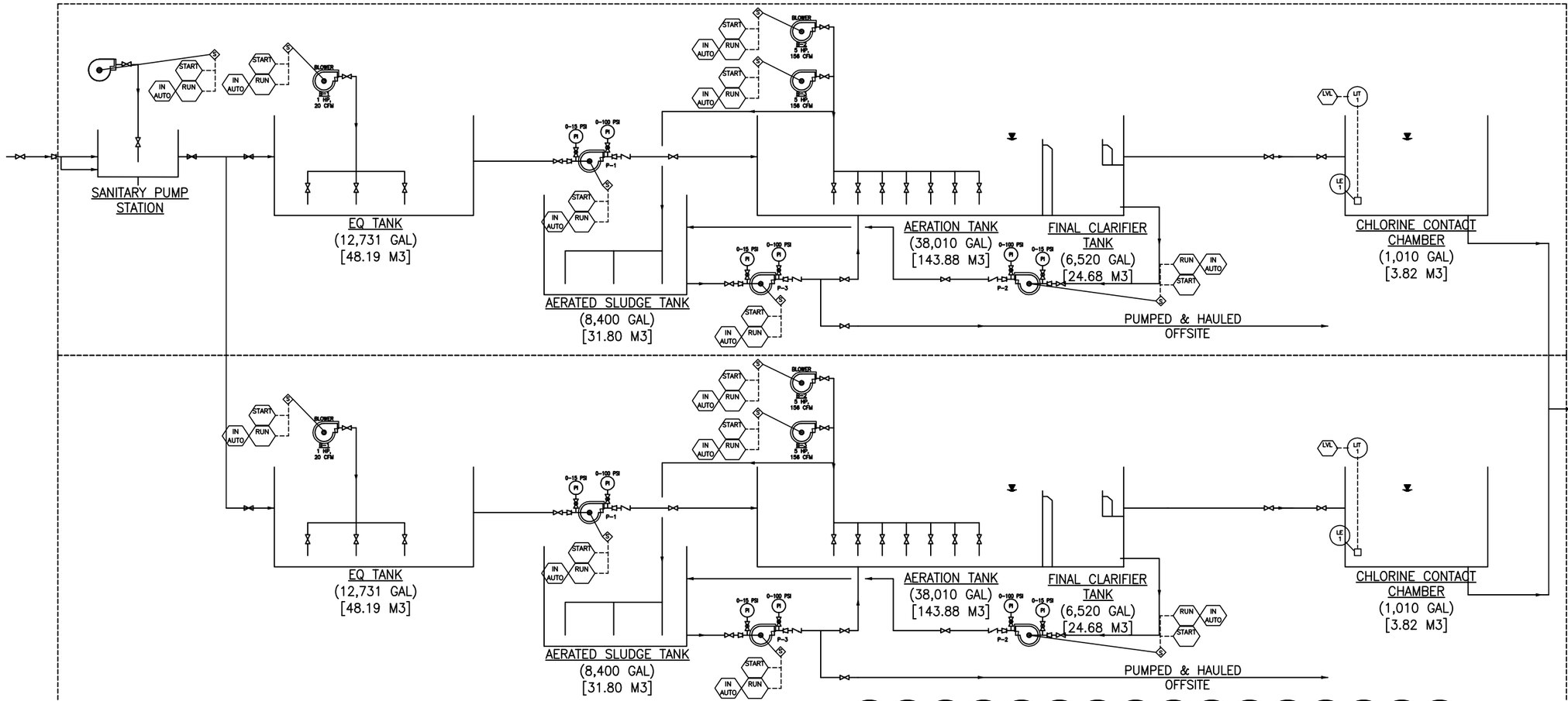

NOTE:

1. FINAL P & ID TO BE PER WWTP VENDOR.

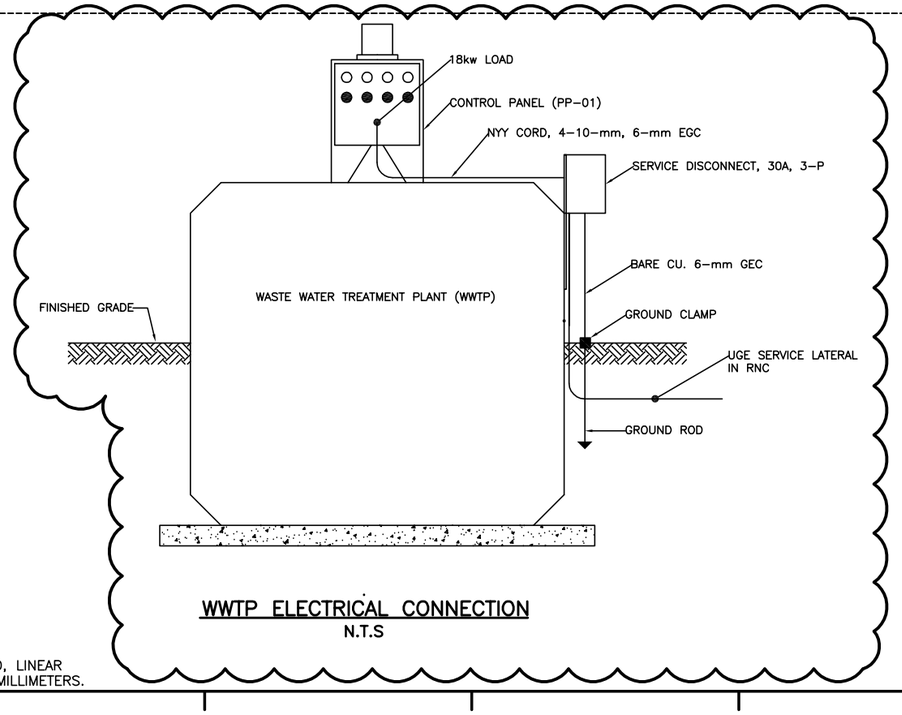

WWTP ELECTRICAL CONNECTION
N.T.S

UNLESS OTHERWISE NOTED, LINEAR DIMENSIONS SHOWN ARE IN MILLIMETERS.

BID DOCUMENT SUBMITTAL

SYMB	DESCRIPTION	DATE	APR
	BID DOCUMENT SUBMITTAL	09/09/10	BRG
	PARTIAL BURY OF WWTP	09/09/10	BRG
	100% DESIGN SUBMITTAL	07/06/10	BRG
	95% DESIGN SUBMITTAL	06/03/10	NJB

This project was made possible by the United States Agency for International Development and the generous support of the American People through USAID Global Architecture and Engineering IQC Contracts.

DESIGNED BY: NJB
DWN BY: EWK
CHK BY: DL
DATE: 09/09/2010
SUBMITTED BY: TETRA TECH
FILE NO: LT0005-C-20

USAID FROM THE AMERICAN PEOPLE

AESP

USAID – OIEE
GHAZI BOYS HIGH SCHOOL
WASTEWATER TREATMENT PROCESS AND INSTRUMENTATION DIAGRAM

SHEET REFERENCE NUMBER:
LT0005 C-20

Z:\127-1298-10001\Work Orders\WO-LT\WO-LT-0005 GBHS Utility Design\CAD\Conceptual\Civil\DWG\WOLT05-C-020.dwg 9/8/2010 2:44:30 PM Harris, Jessica

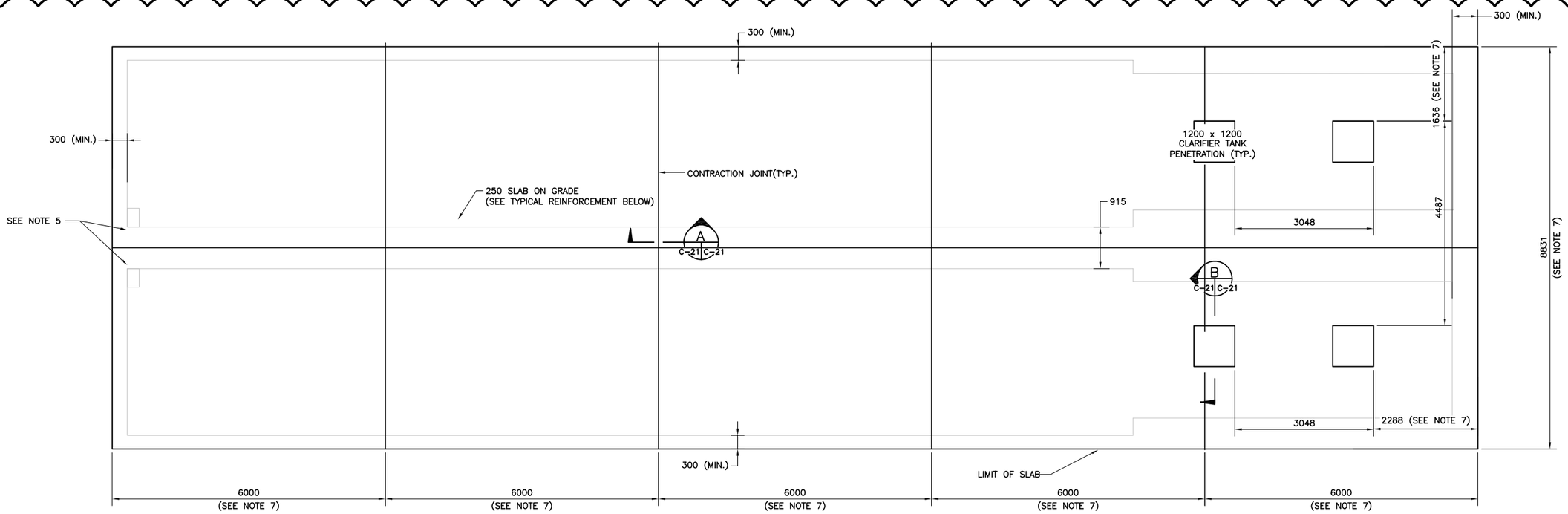

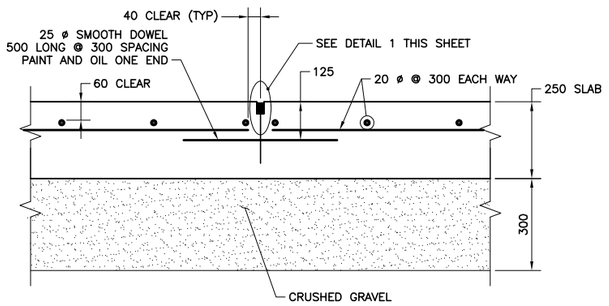

CONTRACTION JOINT DETAIL
SECTION A–A
N.T.S

WWTP SLAB BELOW GRADE
N.T.S

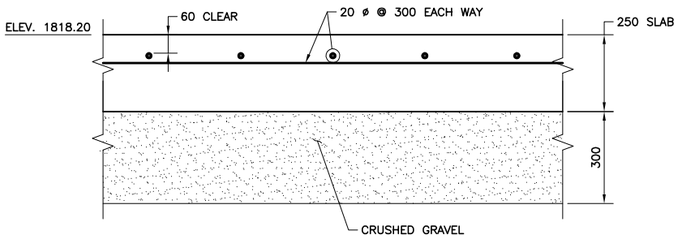

SLAB ON GRADE
TYPICAL REINFORCEMENT DETAIL
N.T.S.

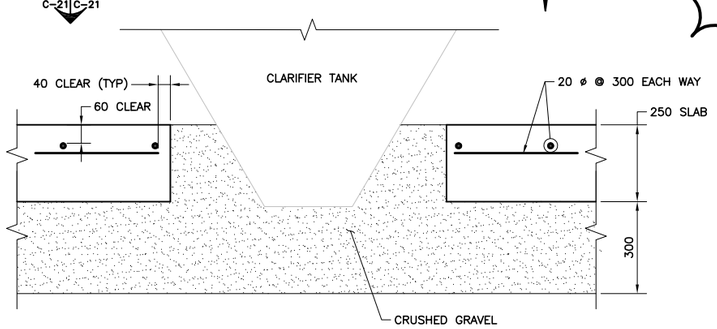

CLARIFIER TANK PENETRATION DETAIL
SECTION B–B
N.T.S

NOTES:

1. SLAB SHALL BE PLACED ON 300mm SELECT GRANULAR MATERIAL PLACED IN TWO EQUAL LIFTS OF 150mm EACH COMPACTED TO A MIN. OF 95% OF THE MAXIMUM DRY DENSITY AS DETERMINED BY ASTM D1557 AT MOISTURE CONTENT OF MINUS 1% TO PLUS 2% OF THE OPTIMUM.
2. STRUCTURAL CONCRETE SHALL BE NORMAL WEIGHT CONCRETE TYPE V CEMENT HAVING A MINIMUM STRENGTH OF 290 kg/cm² AT 28 DAYS.
3. REINFORCING STEEL SHALL CONFORM TO ASTM A615/A615M–06 GRADE 420.
4. LAP SPLICE FOR 20ø BARS SHALL BE 950mm LONG.
5. SEE SHEET C–19 FOR WWTP DIMENSIONS AND SIZE AND LOCATIONS OF PIPE PENETRATIONS THRU SLAB.
6. PROVIDE PVC OR STEEL PIPE SLEEVE 50mm GREATER IN DIAMETER AT ALL UTILITY PENETRATIONS.
7. SLAB DIMENSIONS SHALL BE BASED ON WWTP SIZES PROVIDED BY WWTP MANUFACTURER. FINAL SLAB DIMENSIONS SHALL BE DETERMINED IN THE FIELD BASED ON OFFETS SHOWN ABOVE.

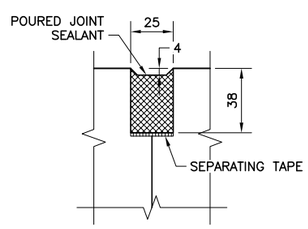

DETAIL – 1
N.T.S.

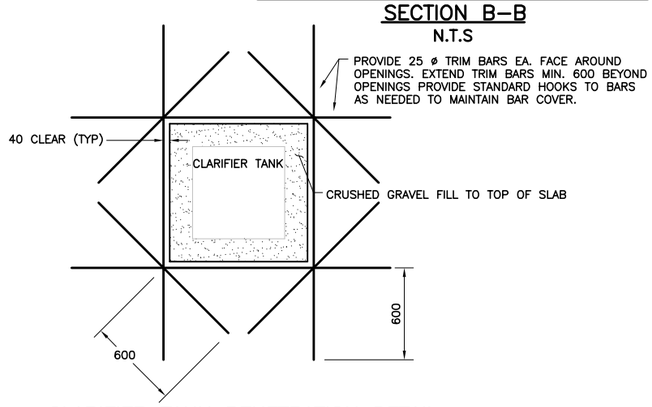

CLARIFIER TANK PENETRATION DETAIL
SECTION C–C
SCALE 1:40

UNLESS OTHERWISE NOTED, LINEAR DIMENSIONS SHOWN ARE IN MILLIMETERS.

BID DOCUMENT SUBMITTAL

This project was made possible by the United States Agency for International Development and the generous support of the American People through USAID Global Architecture and Engineering IQC Contracts.

SYMB	DESCRIPTION	DATE	
	BID DOCUMENT SUBMITTAL	09/09/10	BRG
	BASE SLAB MODS FOR PARTIALLY BURIED WWTP	09/09/10	BRG
	100% DESIGN SUBMITTAL	07/06/10	BRG
	95% DESIGN SUBMITTAL	06/03/10	NJB

DESIGNED BY: NJB | DRWN. BY: EWK | CHK. BY: DL | DATE: 09/09/2010 | SUBMITTED BY: TETRA TECH | FILE NO.: LT0005–C–21

USAID FROM THE AMERICAN PEOPLE

AESP

USAID – OIEE
GHAZI BOYS HIGH SCHOOL
WASTEWATER TREATMENT PLANT
SLAB DETAILS

SHEET REFERENCE NUMBER:
LT0005 C–21

Z:\127-1298-10001\Work Orders\WO-LT\WO-LT-0005 GBHS Utility Design\CAD\Conceptual\Civil\DWG\WOLT05-C-021.dwg 9/8/2010 2:57:30 PM Harris, Jessica

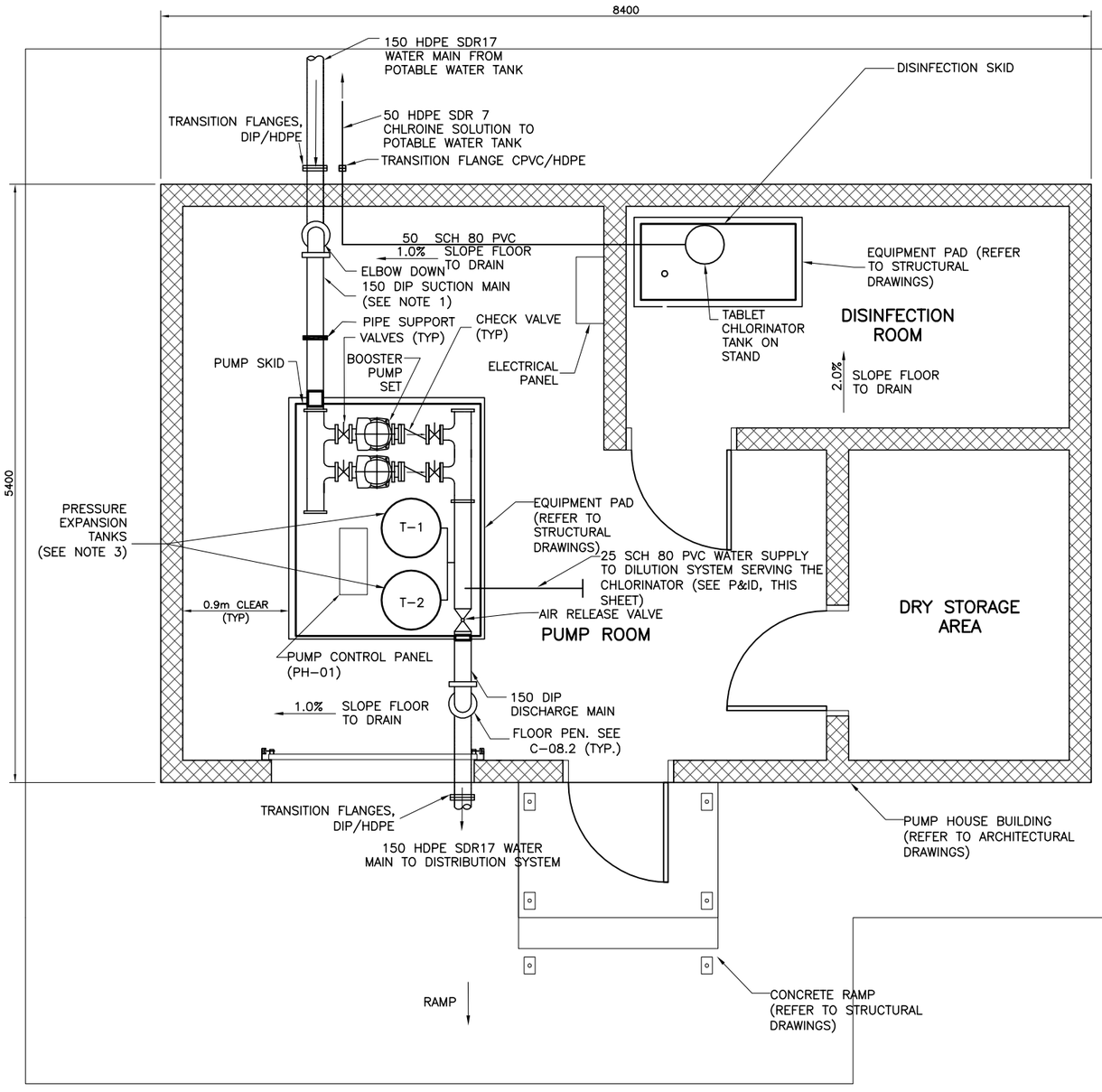

PUMP HOUSE LAYOUT PLAN
SCALE 1:50

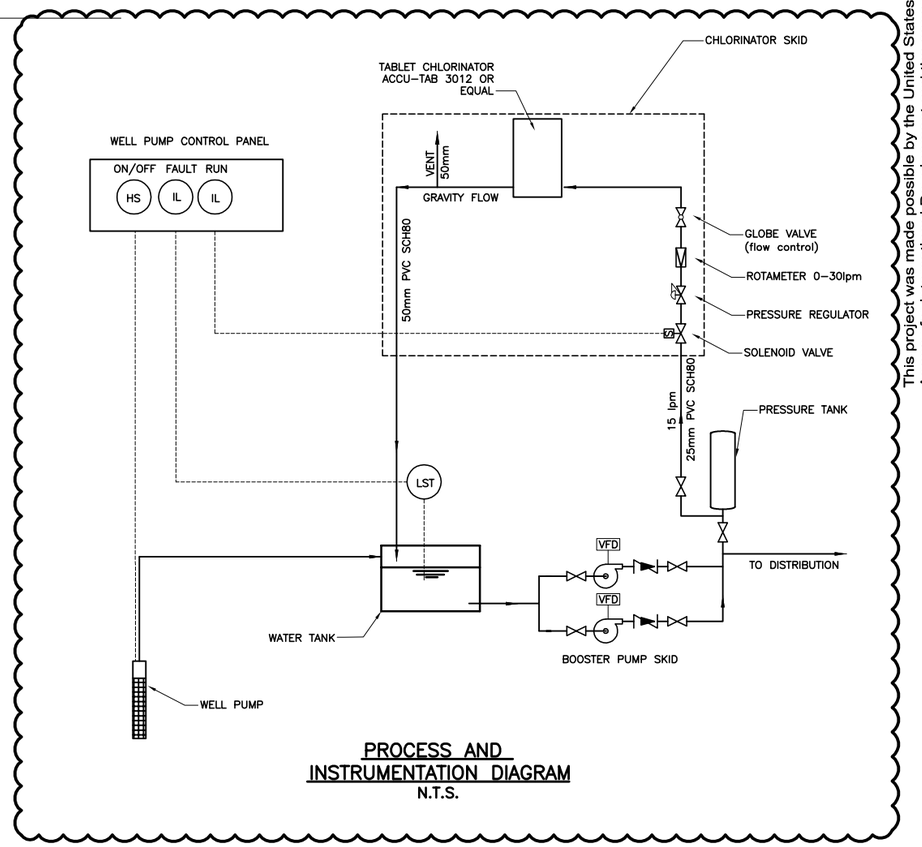

PROCESS AND INSTRUMENTATION DIAGRAM
N.T.S.

This project was made possible by the United States Agency for International Development and the generous support of the American People through USAID Global Architecture and Engineering IQC Contracts.

WATER BOOSTER PUMP SCHEDULE

NAME/ LOCATION	TYPE	RATING POINT CAP. l/s (GPM)	RATING POINT MIN. HEAD m (FT.)	RATING POINT MIN. EFF.	MIN. DISCH SIZE	TYPE SEAL	MOTOR VOLTAGE	MOTOR PHASE	MOTOR WIRE	MOTOR HZ	MOTOR HP	MOTOR ENCL	DRIVE TYPE
BOOSTER PUMP SET	VERTICAL CENTRIFUGAL VARIABLE SPEED	20 (313)	49 (161)	60%	100mm	MECH.	400	3	3	50	20	TEFC	VFD

NOTES:

1. ELEVATION OF WATER SUPPLY PIPE TO BE COORDINATED WITH PUMP SKID MANUFACTURER.
2. THE DISINFECTION UNIT SHALL BE CAPABLE OF PROVIDING A MINIMUM OF 0.5mg/l OF RESIDUAL CHLORINE.
3. PRESSURE EXPANSION TANK TO BE SIZED BY PUMP MANUFACTURER TO ENSURE PROPER PUMP FUNCTION.

1 0 1 2 3 4
1:50

UNLESS OTHERWISE NOTED, LINEAR DIMENSIONS SHOWN ARE IN METERS.

BID DOCUMENT SUBMITTAL

SYMB	DESCRIPTION	DATE	APR
	BID DOCUMENT SUBMITTAL	09/09/10	BRG
	ADDED CHLORINE SYSTEM SCHEMATIC	09/09/10	BRG
	100% DESIGN SUBMITTAL	07/06/10	BRG
	95% DESIGN SUBMITTAL	06/03/10	NJB

DESIGNED BY: NJB
DWN BY: EWK
CHK BY: BRG
DATE: 09/09/2010
SUBMITTED BY: TETRA TECH
FILE NO.: LT0005-C-22

USAID FROM THE AMERICAN PEOPLE
AESP

USAID - OIEE
GHAZI BOYS HIGH SCHOOL
DOMESTIC WATER PUMP HOUSE LAYOUT PLAN

SHEET REFERENCE NUMBER:
LT0005
C-22

Z:\127-1298-10001\Work Orders\WO-LT\WO-LT-0005 GBHS Utility Design\CAD\Conceptual\Civil\DWG\LT0005-C-22\LT0005-C-22.dwg 9/8/2010 3:05:27 PM Harris, Jessica

SYMBOLS

STANDARD REFERENCE BUBBLE

1 / A–01 | A–02 — DETAIL NUMBER; SHEET DETAIL IS LOCATED ON; SHEET(S) DETAIL IS CALLED OUT ON

FLOOR PLAN
SCALE 1:100 — DRAWING TITLE AND SCALE

A / A–01 | A–02 — BUILDING / WALL SECTION

1 / A–01 | A–02 — EXTERIOR ELEVATION

1 / A–01 | A–02 — DETAIL

OFFICE 100 — ROOM NAME AND NUMBER

CUT LINE

CENTER LINE

100.00m T.O. — ELEVATION IN RELATION TO BENCHMARK

CMU WALL

A1 — PARTITION TYPE

105 — SINGLE SWING DOOR AND DOOR TAG

DOOR SYMBOL (ELEVATION)
HINGE SIDE

ROOF SYMBOLS

PLUMBING VENT

SCUPPER AND DOWNSPOUT

ABBREVIATIONS

REFER TO ROOM FINISH LEGEND FOR ADDITIONAL ABBREVIATIONS

ADDL	ADDITIONAL
ADH	ADHESIVE
ADJ	ADJACENT
AFF	ABOVE FINISH FLOOR
ALUM	ALUMINUM
AHU	AIR HANDLING UNIT
APPROX	APPROXIMATE (LY)
ARCH	ARCHITECT (URAL)
AVE	AVERAGE
B	BOTTOM
BD	BOARD
BLDG	BUILDING BLOCK
BLK	BLOCKING BLKG
BO	BY OTHERS
BOM	BOTTOM OF MASONRY
BS	BOTH SIDES, BOTTOM OF STAIR
CIP	CAST IN PLACE
CJ	CONTROL JOINT
CL	CENTER LINE
CLKG	CAULKING
CLR	CLEAR (ING) (ANCE)
CMT	CERAMIC MOSAIC TILE
CMU	CONCRETE MASONRY UNIT
COL	COLUMN
COM	COMMUNICATIONS
COMB	COMBINATION
COMP	COMPOSITE
CONC	CONCRETE
CONT	CONTINUOUS
COORD	COORDINATE
CORR	CORRUGATED, CORRIDOR
CTR	CENTER
DET	DETAIL (ED)
DIA	DIAMETER
DIM	DIMENSION
DIST	DISTANCE
DN	DOWN
DR	DOOR
DWG(S)	DRAWING(S)
DS	DOWNSPOUT
DTL	DETAIL
EA	EACH
EJ	EXPANSION JOINT
ELEC	ELECTRIC (AL)
ELEV	ELEVATION
ENC	ENCLOSURE
EQ	EQUAL
EPDM	ETHYLENE PROPYLENE DIENE MONOMER
EW	EACH WAY
EXP	EXPANSION
EXT	EXTERIOR
FE	FIRE EXTINGUISHER
FEC	FIRE EXTINGUISHER CABINET
FF	FINISH FLOOR, FACTORY FINISH
FFE	FINISH FLOOR ELEVATION
FIN	FINISH (ED)
FLR, FL	FLOOR (ING)
FLUOR	FLUORESCENT
FND	FOUNDATION
FP	FIRE PROTECTION
GA	GAUGE
GALV	GALVANIZED
GL	GLASS, GLAZING
GND	GROUND
GWB	GYPSUM WALL BOARD
GYP	GYPSUM
H	HEIGHT
HDW	HARDWARE
HM (D)	HOLLOW METAL (DOOR)
HORZ	HORIZONTAL
HR	HANDRAIL, HOUR
HVAC	HEATING/ VENTILATING/AIR CONDITIONING
HW	HOT WATER
HWG	HARDWARE GROUP
IBC	INTERNATIONAL BUILDING CODE
INCL	INCLUDE (D) (ING)
INS	INSULATE (D) (ION)
INSUL	INSULATION
INT	INTERIOR
JAN	JANITORS CLOSET
JT	JOINT
L	LENGTH, LONG
LAV	LAVATORY
LEV	LEVEL
LG	LENGTH, LONG
M (m)	METER
MM(mm)	MILLIMETER
MAS	MASONRY
MAT	MATERIAL
MAX	MAXIMUM
MDF	MEDIUM DENSITY FIBERBOARD
MECH	MECHANICAL
MFR	MANUFACTURE (R)
MIN	MINIMUM
MIR	MIRROR
MO	MASONRY OPENING
NIC	NOT IN CONTRACT
NFPA	NATIONAL FIRE PROTECTION ASSOCIATION
NTS	NOT TO SCALE
OA	OVERALL
OC	ON CENTER
OPP	OPPOSITE
OPP HD	OPPOSITE HAND
P	PAINT SURFACE(S)
PAR	PARALLEL
PART	PARTITION
PL	PLASTER
PLUMB	PLUMBING
PNL	PANEL
PR	PAIR
PTD	PAINTED, PAPER TOWEL DISPENSER
PVC	POLYVINYL CHLORIDE
QTY	QUANTITY
R	RADIUS
RCP	REFLECTED CEILING PLAN
REF	REFERENCE
RFG	ROOFING
RLG	RAIL (ING)
RM	ROOM
SCHED	SCHEDULE
SHTHG	SHEATHING
SIM	SIMILAR
SK	SINK
SM	SQUARE METER
SOG	SLAB ON GRADE
SP	SPACE (ING) (ES)
SPEC	SPECIFICATION (S)
SQ	SQUARE
SS	STAINLESS STEEL
STD	STANDARD
STL	STEEL
STOR	STORAGE
STRU	STRUCTURAL
SURF	SURFACE
T	TREAD, TOILET ROOM
TO	TOP OF
TB	TOP AND BOTTOM
TBD	TO BE DETERMINED
THK	THICKNESS
TOM	TOP OF MASONRY
TS	TOP OF STAIR
TYP	TYPICAL
UNO	UNLESS NOTED OTHERWISE
V	VENT
VAR	VARIES, VARIABLE
VERT	VERTICAL
VEST	VESTIBULE
VIF	VERIFY IN FIELD
W	WIDTH, WIDE
WC	WATER CLOSET
WD	WOOD
WDW	WINDOW
WP	WORKING POINT
W/	WITH
W/O	WITHOUT

BID DOCUMENT SUBMITTAL

This project was made possible by the United States Agency for International Development and the generous support of the American People through USAID Global Architecture and Engineering IQC Contracts.

SYMB	SUBMITTAL/REVISION DESCRIPTION	DATE	APR
	BID DOCUMENT SUBMITTAL	09/09/10	BRG
	100% DESIGN SUBMITTAL	07/06/10	
	95% DESIGN SUBMITTAL	05/28/10	

DESIGNED BY: SL
DRAWN BY: SL
CHECKED BY: GH
DATE: 09/09/2010
SUBMITTED BY: TETRA TECH
CAD FILE NAME: LT0005-A-01

USAID FROM THE AMERICAN PEOPLE

AESP

USAID – OIEE
GHAZI BOYS HIGH SCHOOL (GBHS)
PUMP HOUSE
SYMBOLS AND ABBREVIATIONS

SHEET REFERENCE NUMBER:
LT0005
A–01

Z:\127-1298-10001\Work Orders\WO-LT\WO-LT-0005 GBHS Utility Design\CAD\Conceptual\Architecture\DWG\LT0005-A-01.dwg 9/8/2010 3:09:41 PM Harris, Jessica

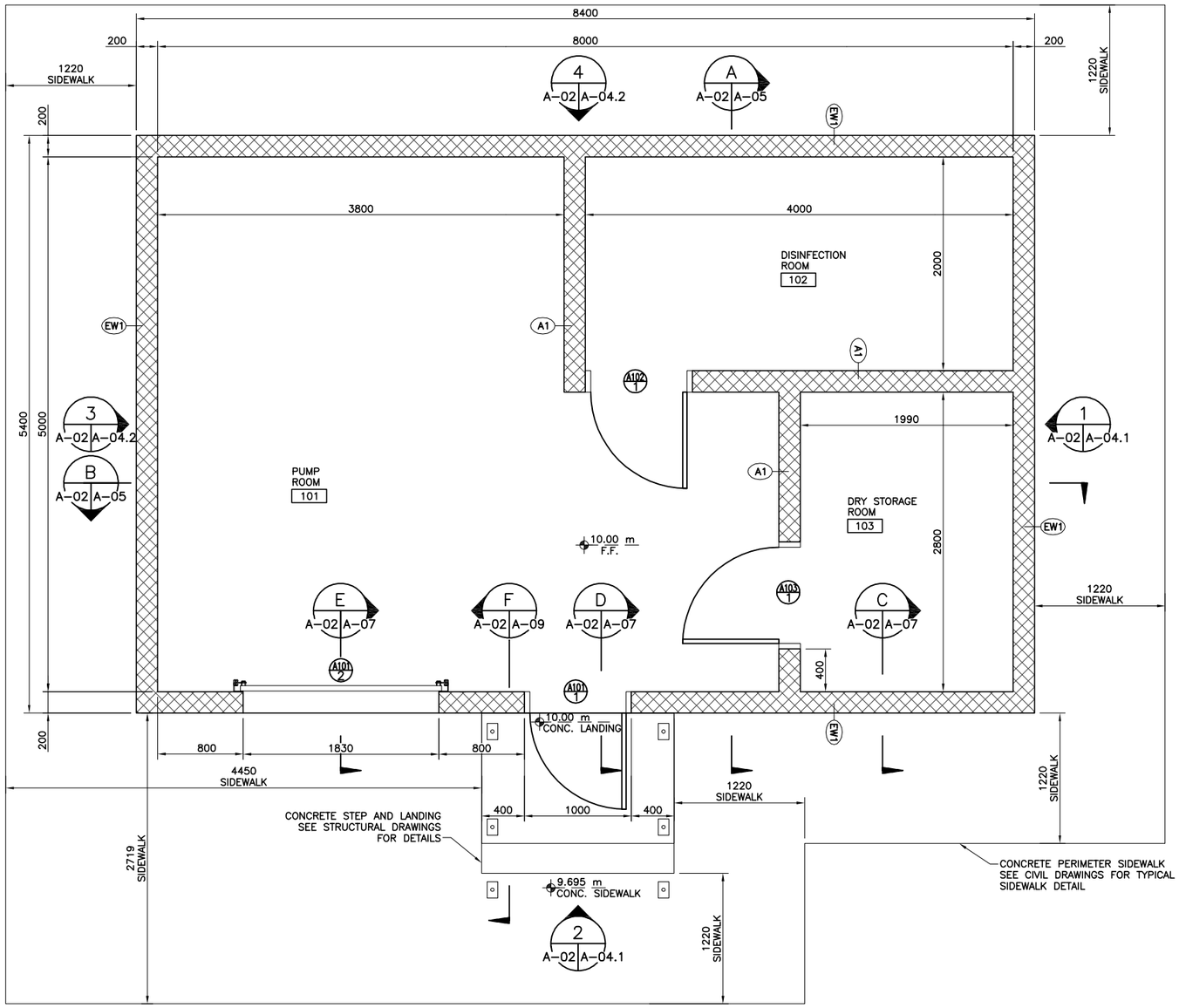

FLOOR PLAN
SCALE 1:50

UNLESS OTHERWISE NOTED, LINEAR
DIMENSIONS SHOWN ARE IN MILLIMETERS.

1:50

BID DOCUMENT SUBMITTAL

SYMB	DESCRIPTION	DATE	
	BID DOCUMENT SUBMITTAL	09/09/10	BRG
	100% DESIGN SUBMITTAL	07/06/10	
	95% DESIGN SUBMITTAL	05/28/10	APR

This project was made possible by the United States Agency for International Development and the generous support of the American People through USAID Global Architecture and Engineering IQC Contracts.

DESIGNED BY: SL
DRAWN BY: SL
CHECKED BY: GH
DATE: 09/09/2010
SUBMITTED BY: TETRA TECH
CAD FILE NAME: LT0005-A-02

USAID FROM THE AMERICAN PEOPLE

AESP

USAID - OIEE
GHAZI BOYS HIGH SCHOOL (GBHS)
PUMP HOUSE
FLOOR PLAN

SHEET REFERENCE NUMBER:
LT0005
A-02

Z:\127-1298-10001\Work Orders\WO-LT\WO-LT-0005 GBHS Utility Design\CAD\Conceptual\Architecture\DWG\LT0005-A-02.dwg 9/8/2010 3:12:05 PM Harris, Jessica

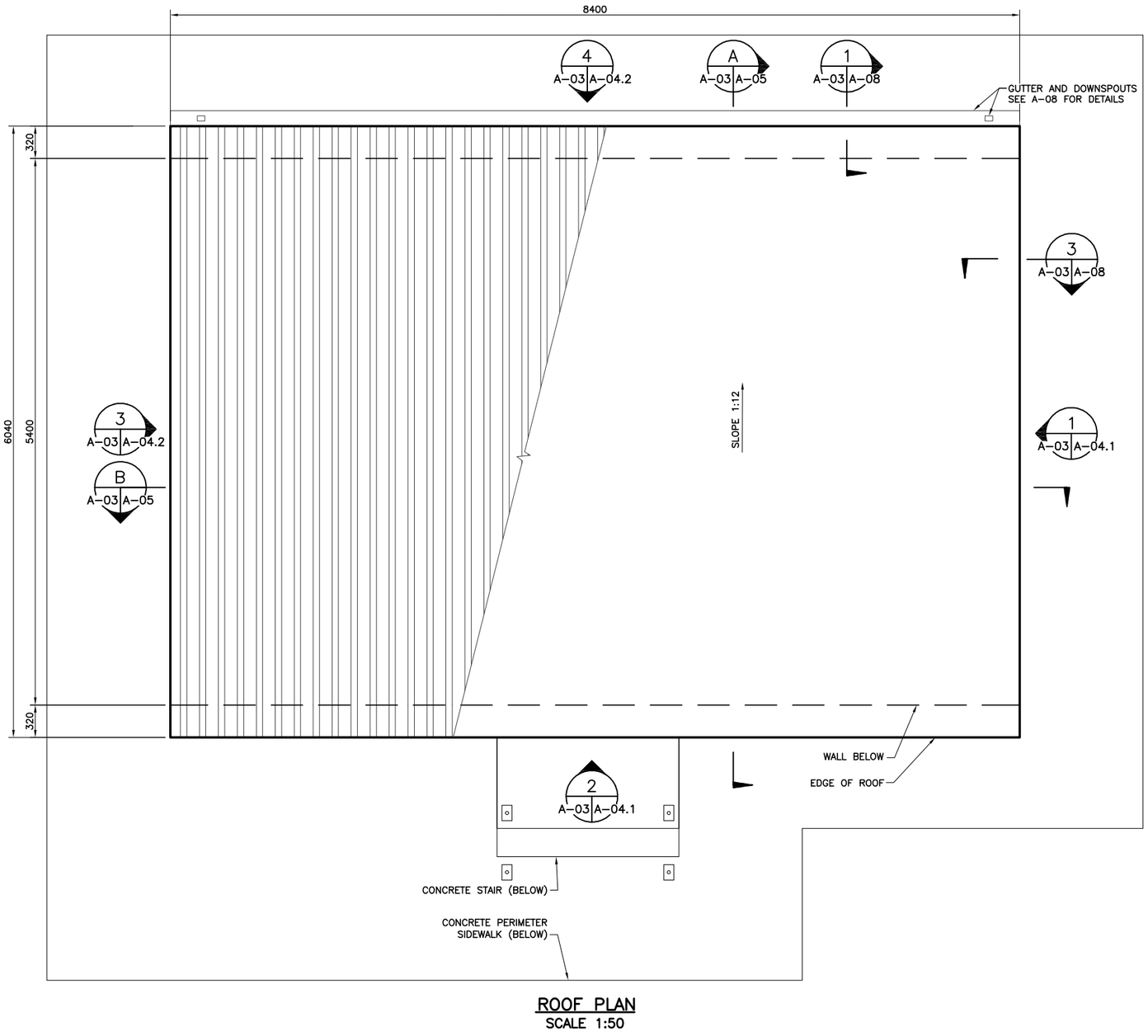

ROOF PLAN
SCALE 1:50

UNLESS OTHERWISE NOTED, LINEAR
DIMENSIONS SHOWN ARE IN MILLIMETERS.

1 0 1 2 3 4
1:50

BID DOCUMENT SUBMITTAL

This project was made possible by the United States Agency for International Development and the generous support of the American People through USAID Global Architecture and Engineering IQC Contracts.

SYMB	DESCRIPTION	DATE	
	BID DOCUMENT SUBMITTAL	09/09/10	BRG
	100% DESIGN SUBMITTAL	07/06/10	
	95% DESIGN SUBMITTAL	05/28/10	APR

SUBMITTAL/REVISION

DESIGNED BY: SL
DRAWN BY: SL
CHECKED BY: GH
DATE: 09/09/2010
SUBMITTED BY: TETRA TECH
CAD FILE NAME: LT0005-A-03

USAID FROM THE AMERICAN PEOPLE

AESP

USAID – OIEE
GHAZI BOYS HIGH SCHOOL (GBHS)
PUMP HOUSE
ROOF PLAN

SHEET REFERENCE NUMBER:
LT0005
A-03

Z:\127-1298-10001\Work Orders\WO-LT\WO-LT-0005 GBHS Utility Design\CAD\Conceptual\Architecture\DWG\LT0005-A-03.dwg 9/8/2010 3:16:53 PM Harris, Jessica

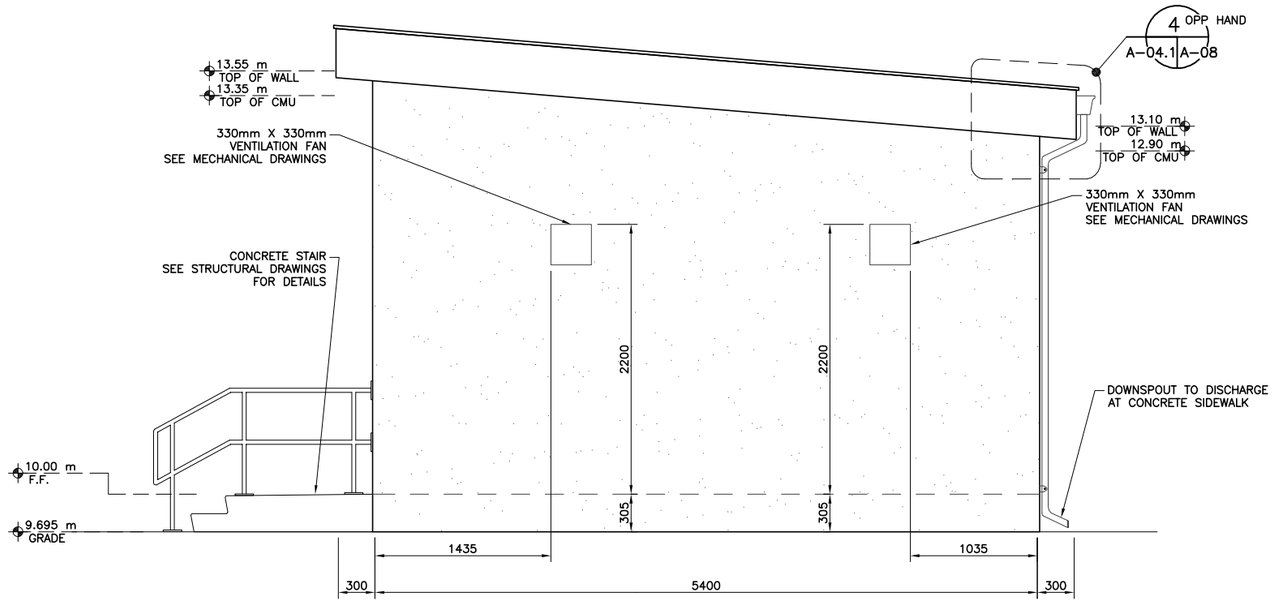

SIDE ELEVATION
SCALE 1:50

1
A-02,A-03 A-04.1

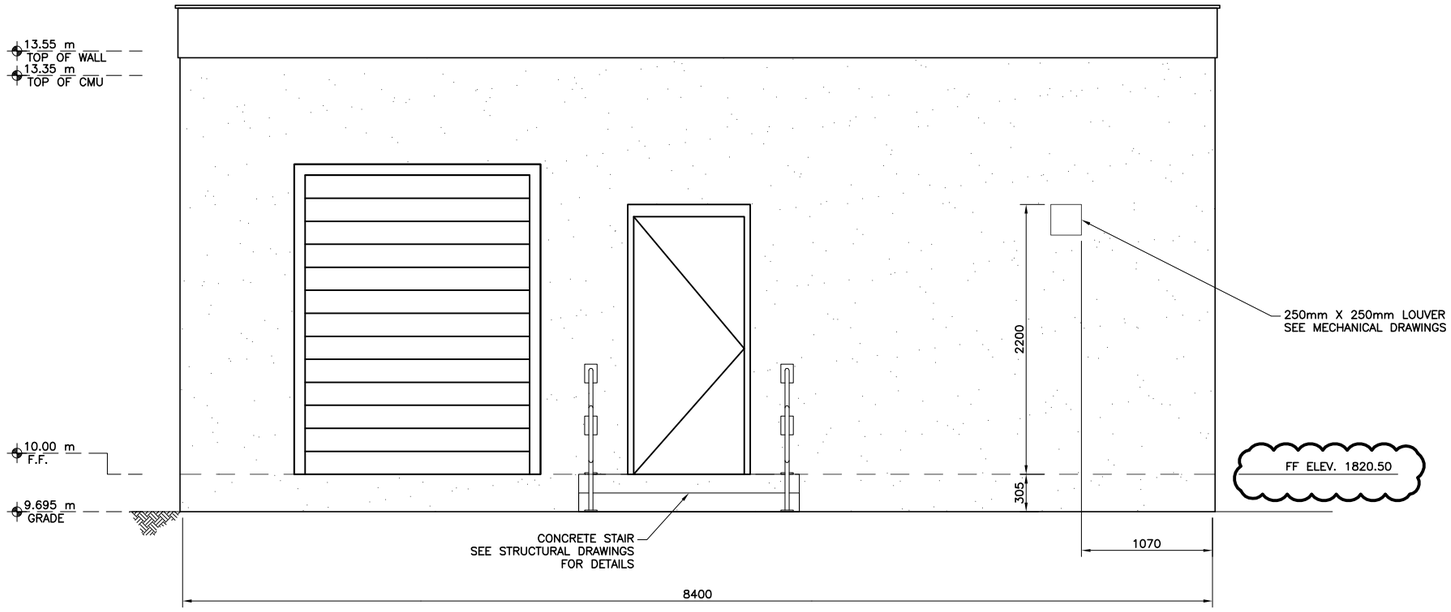

FRONT ELEVATION
SCALE 1:50

2
A-02,A-03 A-04.1

UNLESS OTHERWISE NOTED, LINEAR DIMENSIONS SHOWN ARE IN MILLIMETERS.

1 0 1 2 3 4
1:50

BID DOCUMENT SUBMITTAL

This project was made possible by the United States Agency for International Development and the generous support of the American People through USAID Global Architecture and Engineering IQC Contracts.

SYMB	SUBMITTAL/REVISION DESCRIPTION	DATE	
	BID DOCUMENT SUBMITTAL	09/09/10	BRG
	REVISED FLOOR ELEVATION	09/09/10	BRG
	100% DESIGN SUBMITTAL	07/06/10	
	95% DESIGN SUBMITTAL	05/28/10	APR

DESIGNED BY: SL
DRAWN BY: SL
CHECKED BY: GH
DATE: 09/09/2010
SUBMITTED BY: TETRA TECH
CAD FILE NAME: LT0005-A-04.1

USAID FROM THE AMERICAN PEOPLE

A E S P

USAID – OIEE
GHAZI BOYS HIGH SCHOOL (GBHS)
PUMP HOUSE BUILDING ELEVATIONS
SHEET 1 OF 2

SHEET REFERENCE NUMBER:
LT0005 A-04.1

Z:\127-1298-10001\Work Orders\WO-LT\WO-LT-0005 GBHS Utility Design\CAD\Conceptual\Architecture\DWG\LT0005-A-04.1.dwg 9/8/2010 4:02:49 PM Harris, Jessica

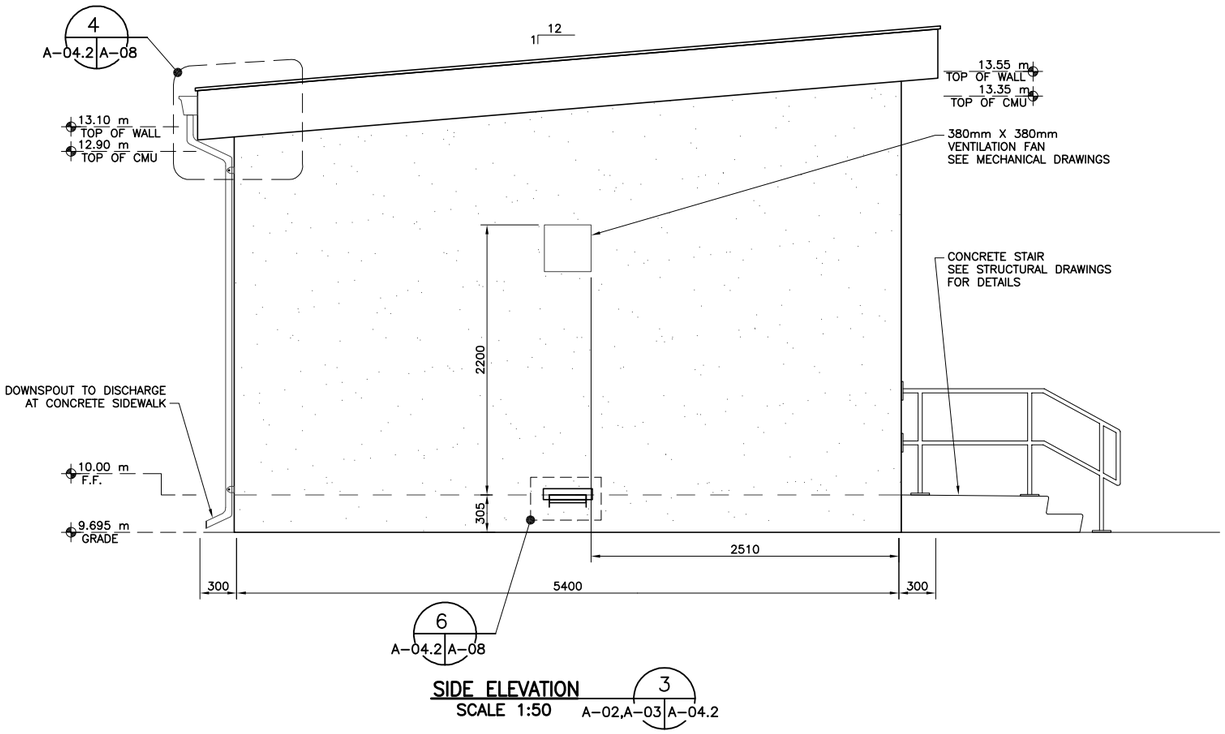

SIDE ELEVATION
SCALE 1:50
3
A-02,A-03 A-04.2

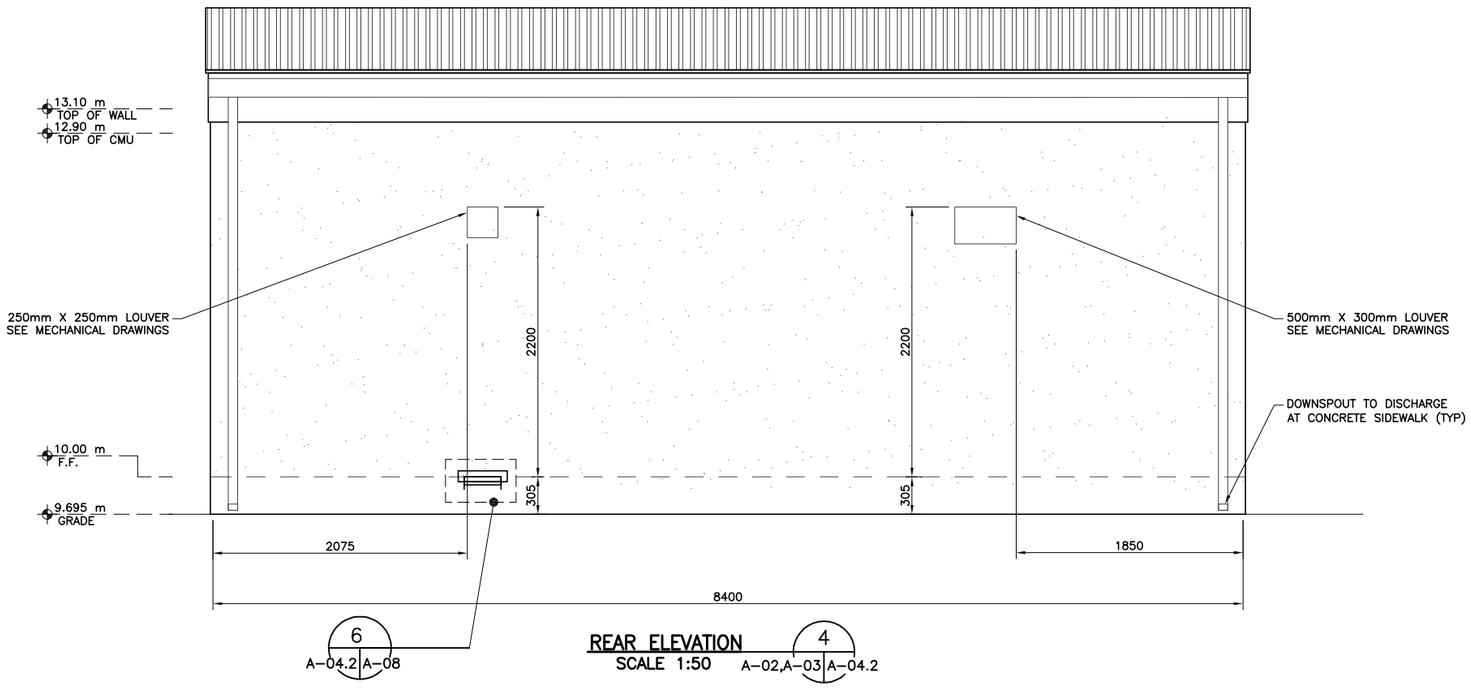

REAR ELEVATION
SCALE 1:50
4
A-02,A-03 A-04.2

UNLESS OTHERWISE NOTED, LINEAR
DIMENSIONS SHOWN ARE IN MILLIMETERS.

1 0 1 2 3 4
1:50

BID DOCUMENT SUBMITTAL

This project was made possible by the United States Agency for International Development and the generous support of the American People through USAID Global Architecture and Engineering IQC Contracts.

SYMB	DESCRIPTION	DATE	
	BID DOCUMENT SUBMITTAL	09/09/10	BRG
	100% DESIGN SUBMITTAL	07/06/10	
	95% DESIGN SUBMITTAL	05/28/10	APR

SUBMITTAL/REVISION

DESIGNED BY: SL
DRAWN BY: SL
CHECKED BY: GH
DATE: 09/09/2010
SUBMITTED BY: TETRA TECH
CAD FILE NAME: LT0005-A-04.2

USAID FROM THE AMERICAN PEOPLE

A E S P

USAID – OIEE
GHAZI BOYS HIGH SCHOOL (GBHS)
PUMP HOUSE BUILDING ELEVATIONS
SHEET 2 OF 2

SHEET REFERENCE NUMBER:
LT0005
A-04.2

Z:\127-1298-10001\Work Orders\WO-LT\WO-LT-0005 GBHS Utility Design\CAD\Conceptual\Architecture\DWG\LT0005-A-04.2.dwg 9/8/2010 4:04:59 PM Harris, Jessica

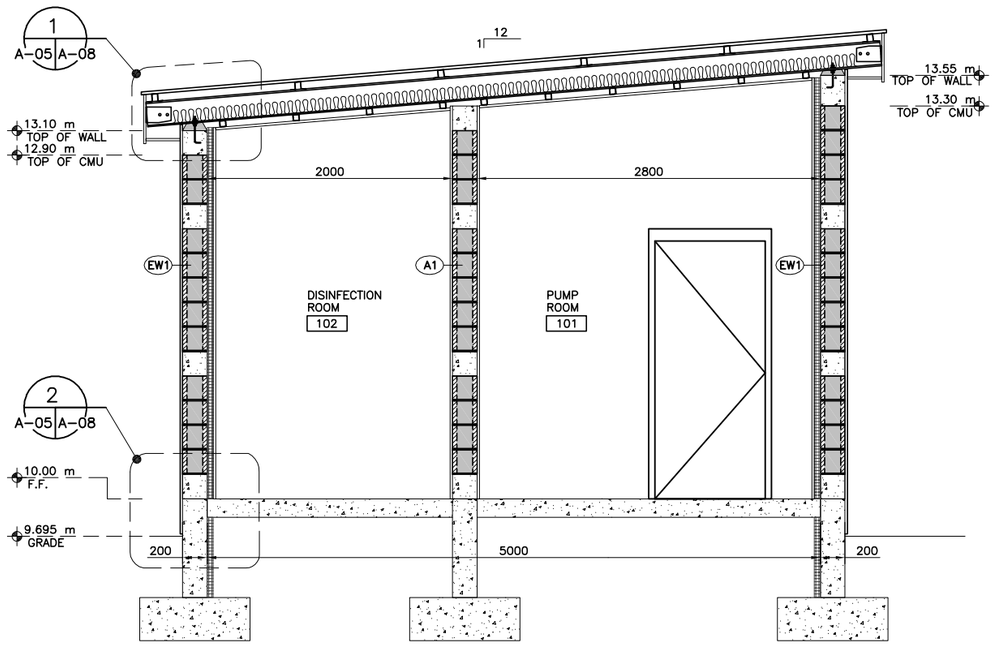

BUILDING SECTION A
SCALE 1:50 A-02,A-03 A-05

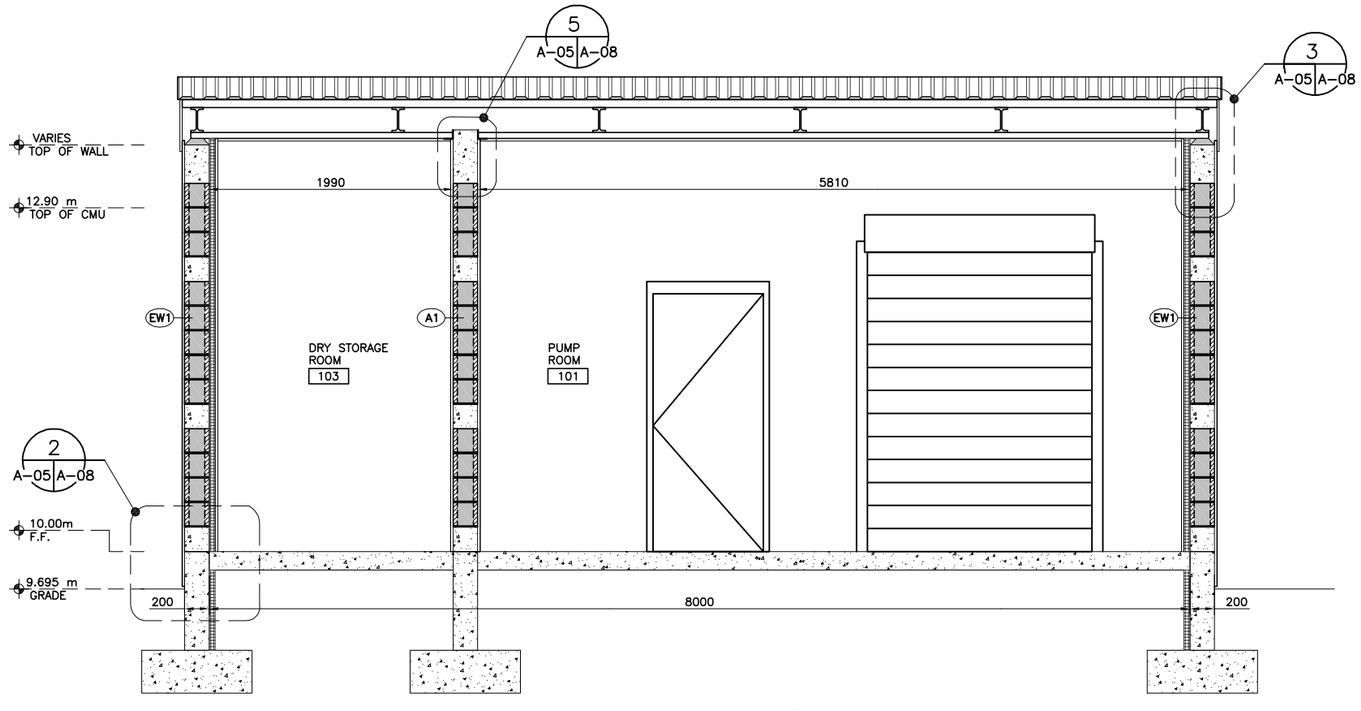

BUILDING SECTION B
SCALE 1:50 A-02,A-03 A-05

UNLESS OTHERWISE NOTED, LINEAR
DIMENSIONS SHOWN ARE IN MILLIMETERS.

1 0 1 2 3 4
1:50

BID DOCUMENT SUBMITTAL

SYMB	DESCRIPTION	DATE	APR
	BID DOCUMENT SUBMITTAL	09/09/10	BRG
	100% DESIGN SUBMITTAL	07/06/10	
	95% DESIGN SUBMITTAL	05/28/10	

This project was made possible by the United States Agency for International Development and the generous support of the American People through USAID Global Architecture and Engineering IQC Contracts.

DESIGNED BY: SL
DRAWN BY: SL
CHECKED BY: GH
DATE: 09/09/2010
SUBMITTED BY: TETRA TECH
CAD FILE NAME: LT0005-A-05

USAID FROM THE AMERICAN PEOPLE

AESP

USAID - OIEE
GHAZI BOYS HIGH SCHOOL (GBHS)
PUMP HOUSE
BUILDING SECTIONS

SHEET REFERENCE NUMBER:
LT0005 A-05

Z:\127-1298-10001\Work Orders\WO-LT\WO-LT-0005 GBHS Utility Design\CAD\Conceptual\Architecture\DWG\LT0005-A-05.dwg 9/8/2010 4:11:06 PM Harris, Jessica

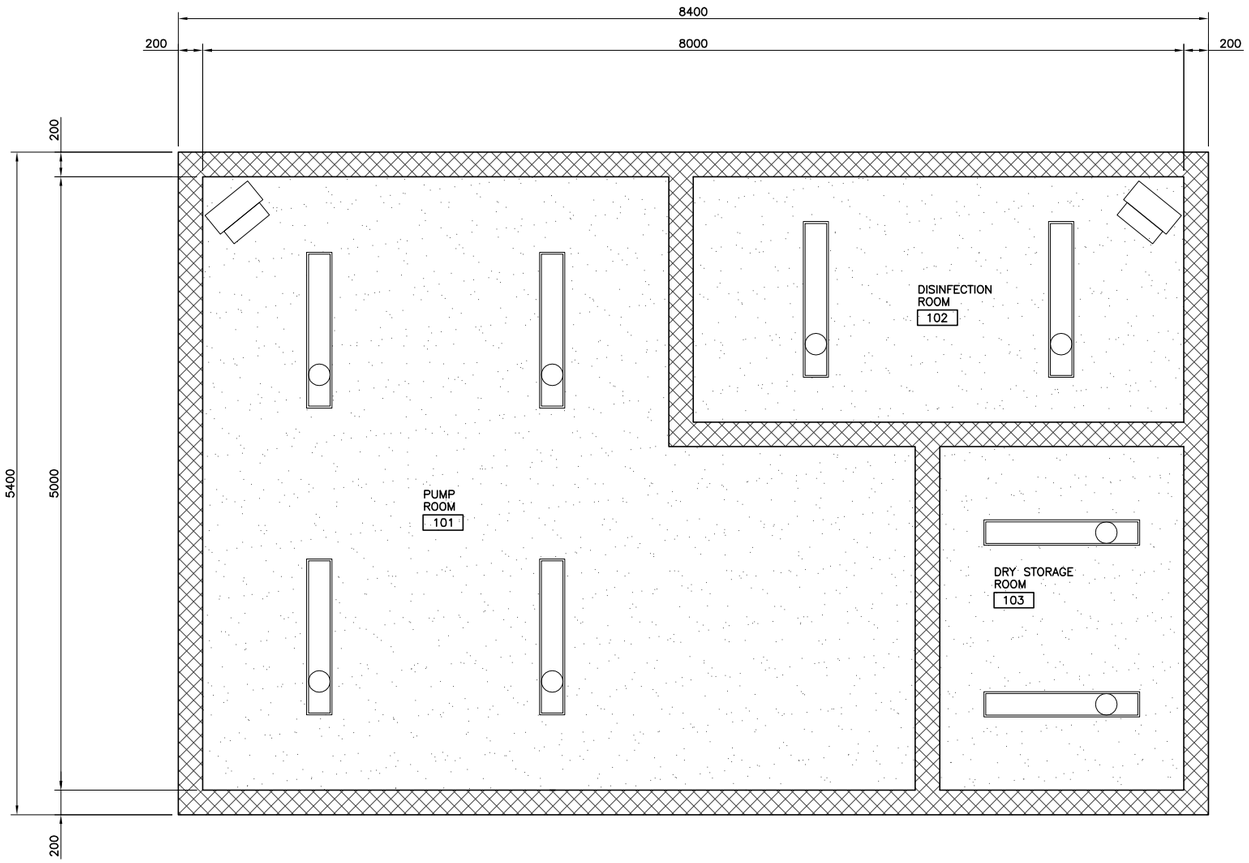

REFLECTED CEILING PLAN
SCALE 1:50

LEGEND:

- LIGHT FIXTURE, SEE ELECTRICAL DRAWINGS
- PAINTED GYPSUM CEILING
- UNIT HEATER (SUPPORTED FROM STRUCTURE ABOVE)

NOTE:

THIS DRAWINGS IS FOR COORDINATION PURPOSES ONLY. REFER TO ELECTRICAL AND MECHANICAL DRAWINGS FOR ADDITIONAL INFORMATION.

1 0 1 2 3 4
1:50

UNLESS OTHERWISE NOTED, LINEAR DIMENSIONS SHOWN ARE IN MILLIMETERS.

BID DOCUMENT SUBMITTAL

SYMB	SUBMITTAL/REVISION DESCRIPTION	DATE	APR
	BID DOCUMENT SUBMITTAL	09/09/10	BRG
	100% DESIGN SUBMITTAL	07/06/10	
	95% DESIGN SUBMITTAL	05/28/10	

This project was made possible by the United States Agency for International Development and the generous support of the American People through USAID Global Architecture and Engineering IQC Contracts.

DESIGNED BY: SL
DRAWN BY: SL
CHECKED BY: GH
DATE: 09/09/2010
SUBMITTED BY: TETRA TECH
CAD FILE NAME: LT0005-A-06

USAID FROM THE AMERICAN PEOPLE

AESP

USAID – OIEE
GHAZI BOYS HIGH SCHOOL (GBHS)
PUMP HOUSE
REFLECTED CEILING PLAN

SHEET REFERENCE NUMBER:
LT0005 A–06

Z:\127-1298-10001\Work Orders\WO-LT\WO-LT-0005 GBHS Utility Design\CAD\Conceptual\Architecture\DWG\LT0005-A-06.dwg 9/8/2010 4:14:13 PM Harris, Jessica

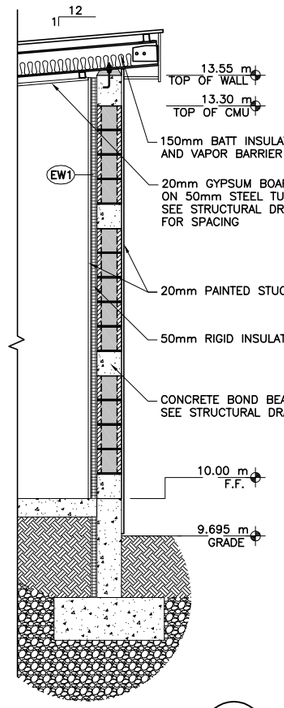

WALL SECTION C
SCALE 1:50
A-02 | A-07

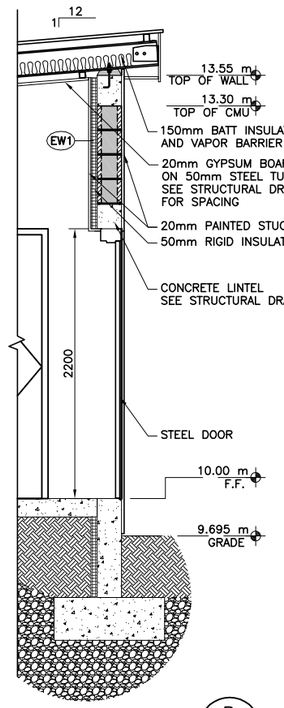

WALL SECTION D
SCALE 1:50
A-02 | A-07

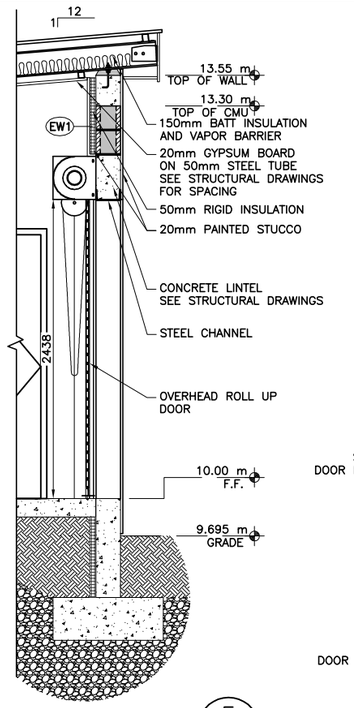

WALL SECTION E
SCALE 1:50
A-02 | A-07

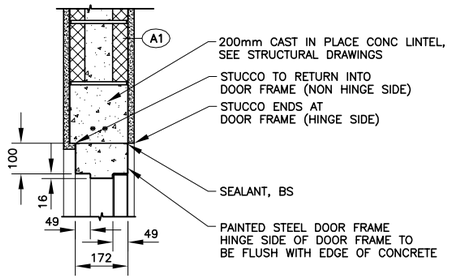

DOOR HEADER DETAIL (INTERIOR) 10
A-09 | A-07
SCALE 1:20

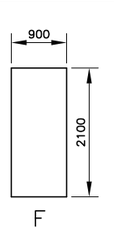

DOOR TYPE
SCALE 1:100

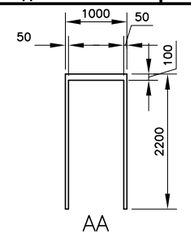

FRAME TYPE
SCALE 1:100

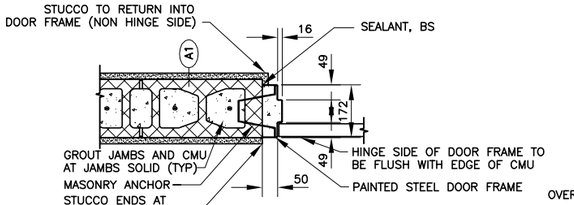

DOOR JAMB DETAIL (INTERIOR) 11
A-09 | A-07
SCALE 1:20

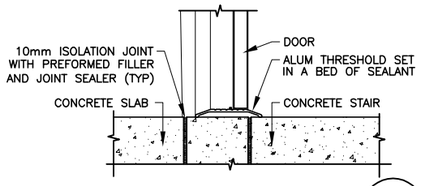

DOOR THRESHOLD DETAIL 14
A-09 | A-07
SCALE 1:20

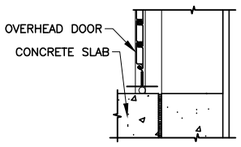

OVERHEAD DOOR SILL DETAIL 15
A-09 | A-07
SCALE 1:20

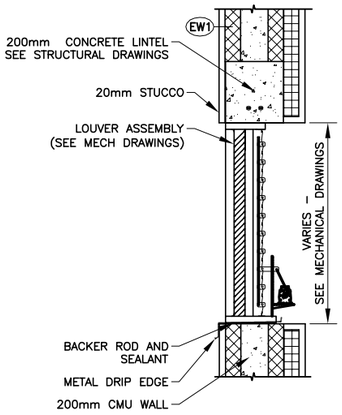

NOTE:
LOUVER SHALL RECEIVE CONTINUOUS SEALANT AROUND PENETRATION IN ORDER TO CREATE WATERTIGHT INSTALLATION.

LOUVER DETAIL
SCALE 1:20

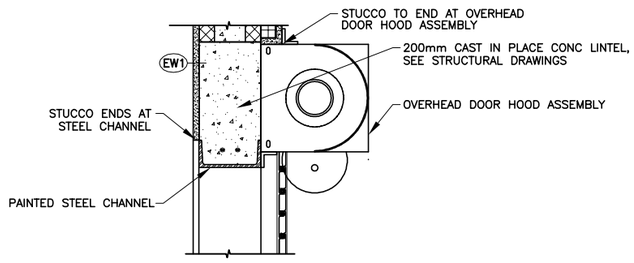

OVERHEAD DOOR HEADER DETAIL 12
A-09 | A-07
SCALE 1:20

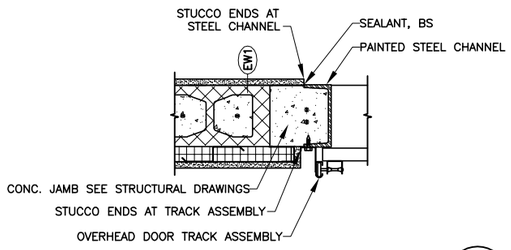

OVERHEAD DOOR JAMB DETAIL 13
A-09 | A-07
SCALE 1:20

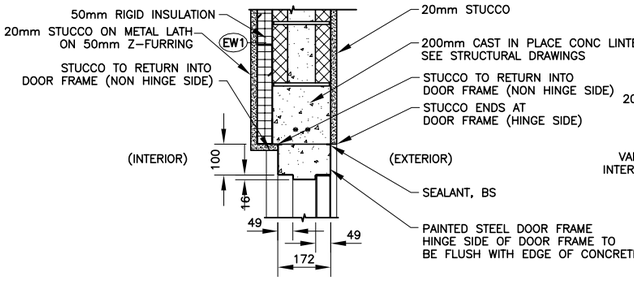

DOOR HEADER DETAIL (EXTERIOR) 16
A-09 | A-07
SCALE 1:20

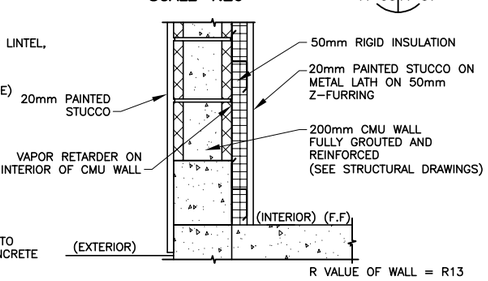

EXTERIOR WALL TYPE EW1
SCALE 1:20

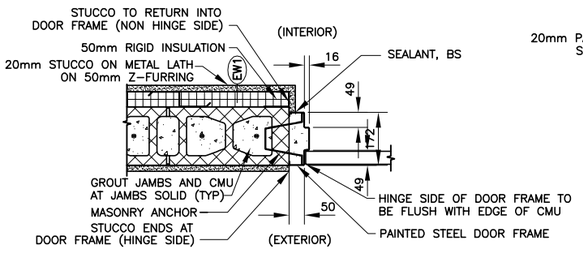

DOOR JAMB DETAIL (EXTERIOR) 17
A-09 | A-07
SCALE 1:20

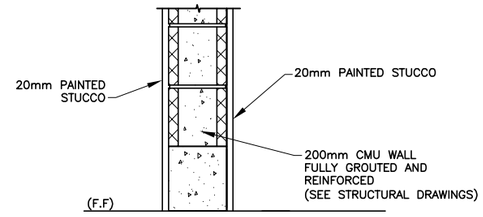

INTERIOR WALL TYPE A1
SCALE 1:20

1 0 1 2 3 4 5 6 7 8 9
1:100

1 0 1 2 3 4
1:50

1 .50 0 1
1:20

UNLESS OTHERWISE NOTED, LINEAR DIMENSIONS SHOWN ARE IN MILLIMETERS.

This project was made possible by the United States Agency for International Development and the generous support of the American People through USAID Global Architecture and Engineering IQC Contracts.

BID DOCUMENT SUBMITTAL

SYMB	DESCRIPTION	DATE	APR
	BID DOCUMENT SUBMITTAL	09/09/10	BRG
	100% DESIGN SUBMITTAL	07/06/10	
	95% DESIGN SUBMITTAL	05/28/10	

DESIGNED BY: SL	DATE: 09/09/2010
DRAWN BY: SL	SUBMITTED BY: TETRA TECH
CHECKED BY: GH	CAD FILE NAME: LT0005-A-07

USAID FROM THE AMERICAN PEOPLE

AESP

USAID - OIEE
GHAZI BOYS HIGH SCHOOL (GBHS)
PUMP HOUSE WALL SECTIONS AND DETAILS

SHEET REFERENCE NUMBER:
LT0005
A-07

Z:\127-1298-10001\Work Orders\WO-LT\WO-LT-0005 GBHS Utility Design\CAD\Conceptual\Architecture\DWG\LT0005-A-07.dwg 9/8/2010 4:16:23 PM Harris, Jessica

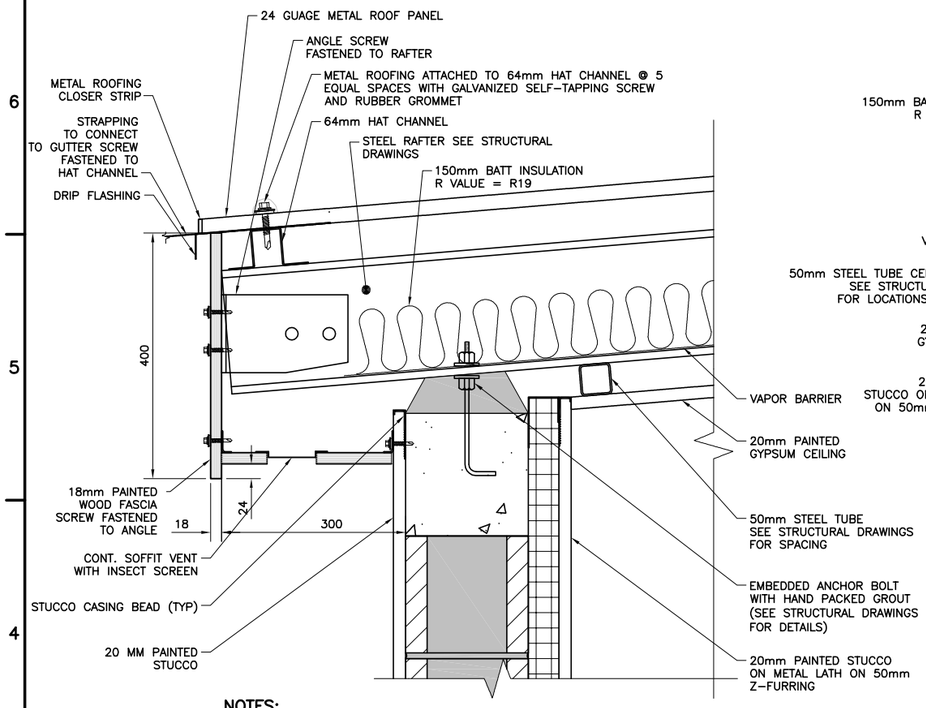

NOTES:

1. SOFFITS AND FASCIAS SHALL BE 30mm THICK SIDING GRADE HARDBOARD OR 19mm THICK EXTERIOR TYPE PLYWOOD.
2. SCREWS SHALL BE SIZE AND TYPE BEST SUITED FOR THE PURPOSE. SCREWS SHALL BE HOT DIPPED GALVANIZED OR ALUMINUM WHEN USED ON EXTERIOR APPLICATIONS. LENGTH OF SCREWS SHALL BE SUFFICIENT TO EXTEND 40mm INTO SUPPORTS.

SOFFIT VENT DETAIL 1 — SCALE 1:10 — A-03, A-05 | A-08

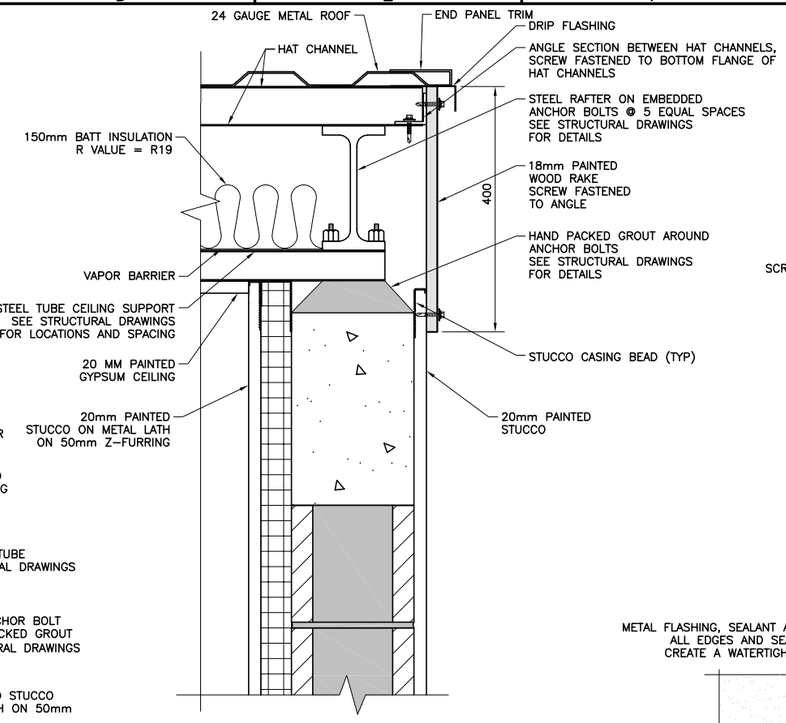

NOTES:

1. RAKE BOARDS SHALL BE 30mm THICK SIDING GRADE HARDBOARD OR 19mm THICK EXTERIOR TYPE PLYWOOD.
2. SCREWS SHALL BE SIZE AND TYPE BEST SUITED FOR THE PURPOSE. SCREWS SHALL BE HOT DIPPED GALVANIZED OR ALUMINUM WHEN USED ON EXTERIOR APPLICATIONS. LENGTH OF SCREWS SHALL BE SUFFICIENT TO EXTEND 40mm INTO SUPPORTS.

RAKE DETAIL 3 — SCALE 1:10 — A-03, A-05 | A-08

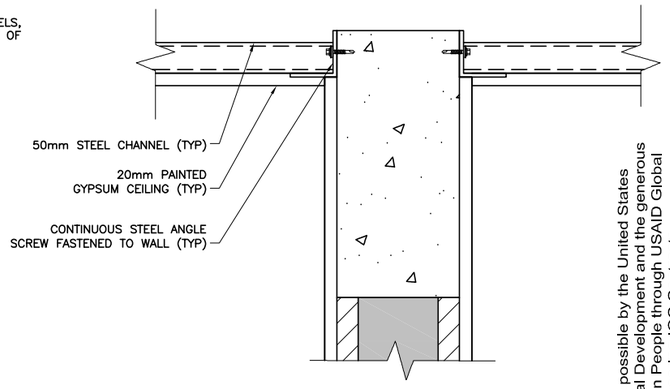

CEILING DETAIL 5 — SCALE 1:10 — A-05 | A-08

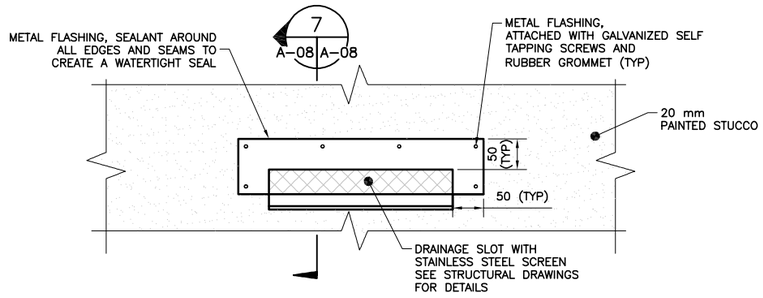

DRAINAGE SLOT/SCUPPER DETAIL 6 — SCALE 1:10 — A-04.2 | A-08

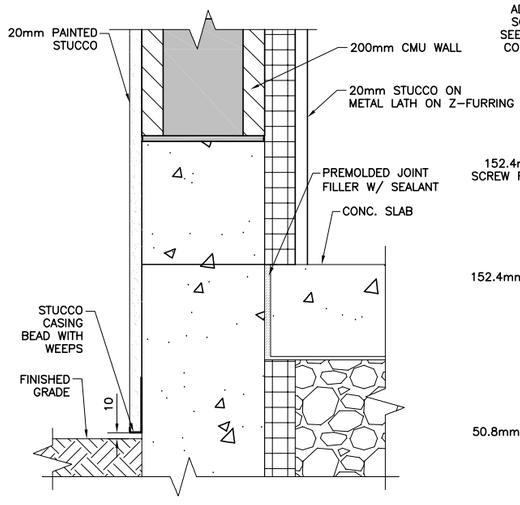

STUCCO CASING BEAD WITH WEEPS DETAIL 2 — SCALE 1:10 — A-05 | A-08

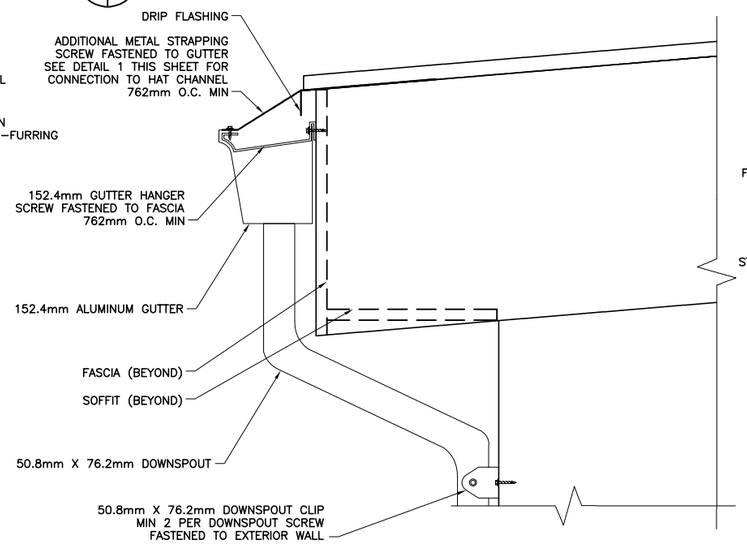

GUTTER DETAIL 4 — SCALE 1:10 — A-04.1, A-04.2 | A-08

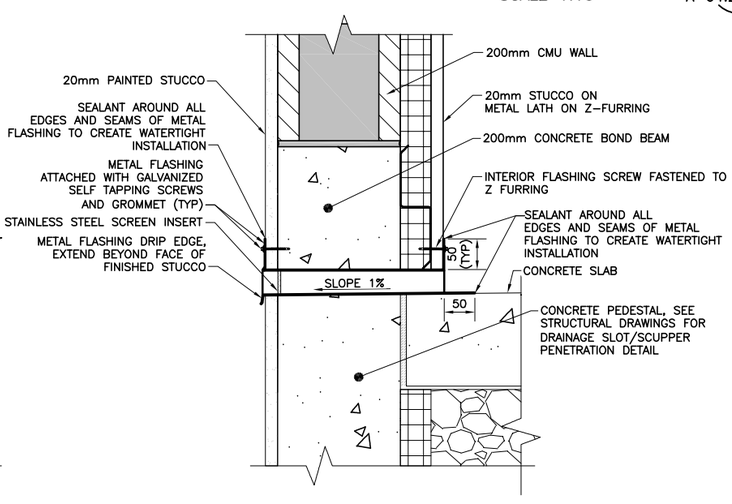

DRAINAGE SLOT/SCUPPER SECTION 7 — SCALE 1:10 — A-08 | A-08

UNLESS OTHERWISE NOTED, LINEAR DIMENSIONS SHOWN ARE IN MILLIMETERS.

0 .50 1.00
1:10

This project was made possible by the United States Agency for International Development and the generous support of the American People through USAID Global Architecture and Engineering IQC Contracts.

BID DOCUMENT SUBMITTAL

SYMB	DESCRIPTION	DATE	APR
	BID DOCUMENT SUBMITTAL	09/09/10	BRG
	100% DESIGN SUBMITTAL	07/06/10	
	95% DESIGN SUBMITTAL	05/28/10	

DESIGNED BY: SL | DRAWN BY: SL | CHECKED BY: GH
DATE: 09/09/2010
SUBMITTED BY: TETRA TECH
CAD FILE NAME: LT0005-A-08

USAID FROM THE AMERICAN PEOPLE

AESP

USAID - OIEE
GHAZI BOYS HIGH SCHOOL (GBHS)
PUMP HOUSE
MISCELLANEOUS DETAILS

SHEET REFERENCE NUMBER:
LT0005 A-08

Z:\127-1298-10001\Work Orders\WO-LT\WO-LT-0005 GBHS Utility Design\CAD\Conceptual\Architecture\DWG\LT0005-A-08.dwg 9/8/2010 4:18:16 PM Harris, Jessica

DOOR SCHEDULE

DOOR TAG ROOM	DOOR TAG DOOR	DOOR TO	DOOR TYPE	DOOR MATERIAL	DOOR RATING	DOOR QTY	DOOR WIDTH	DOOR HEIGHT	DOOR THK	DOOR GLAZING	DOOR FRAME MAT	DOOR FRAME TYPE	DOOR FRAME HEAD	DOOR FRAME JAMB1	DOOR FRAME JAMB2	DOOR FRAME SILL	HARD WARE	REMARKS
101	1	EXTERIOR	F	HMD–E	–	1	900	2100	45	–	STL	AA	16/A–07	17/A–07	–	14/A–07	HWG–1	INSULATED
101	2	EXTERIOR	–	STEEL	–	1	1829	2438	–	–	STL	–	12/A–07	13/A–07	–	15/A–07	–	
102	1	PUMP ROOM	F	STEEL	–	1	900	2100	45	–	STL	AA	10/A–07	11/A–07	–	–	HWG–2	
103	1	PUMP ROOM	F	STEEL	–	1	900	2100	45	–	STL	AA	10/A–07	11/A–07	–	–	HWG–2	

FINISH SCHEDULE

ROOM NO.	NAME	FLOOR FINISH	FLOOR BASE	WALLS EXTERIOR	WALLS INTERIOR	CEILINGS FINISH	CEILINGS HEIGHT	REMARKS
101	PUMP ROOM	SC	–	ST, P	ST, P	GYP, P	VARIES	
102	DISINFECTION RM	SC	–	ST, P	ST, P	GYP, P	VARIES	
103	DRY STORAGE RM	SC	–	ST, P	ST, P	GYP, P	VARIES	

LEGEND

FLOORS	WALLS	BASE	CEILING
SC Sealed Steel Troweled Concrete	P Paint ST Stucco	– –	GYP Gypsum Board P Paint

GENERAL NOTE: ALL DOOR FRAMES, TRIM, AND DOORS TO RECEIVE P

HARDWARE SCHEDULE

DOOR TAG ROOM	DOOR TAG DOOR	HARDWARE	REMARKS
101	1	HWG–1	1 – 1/2 PAIR HINGES 1 – THRESHOLD 1 – LOCKSET 1 – SET WEATHER STRIPPING
101	2	–	SEE OVERHEAD ROLLING DOOR SPECIFICATION
102	1	HWG–2	1 – 1/2 PAIR HINGES 1 – LOCKSET
103	1	HWG–2	1 – 1/2 PAIR HINGES 1 – WALL STOP 1 – LOCKSET

HMD–E = EXTERIOR MAXIMUM DUTY DOOR
REFER TO DOOR TYPES ON A–07
REFER TO FRAME TYPES ON A–07

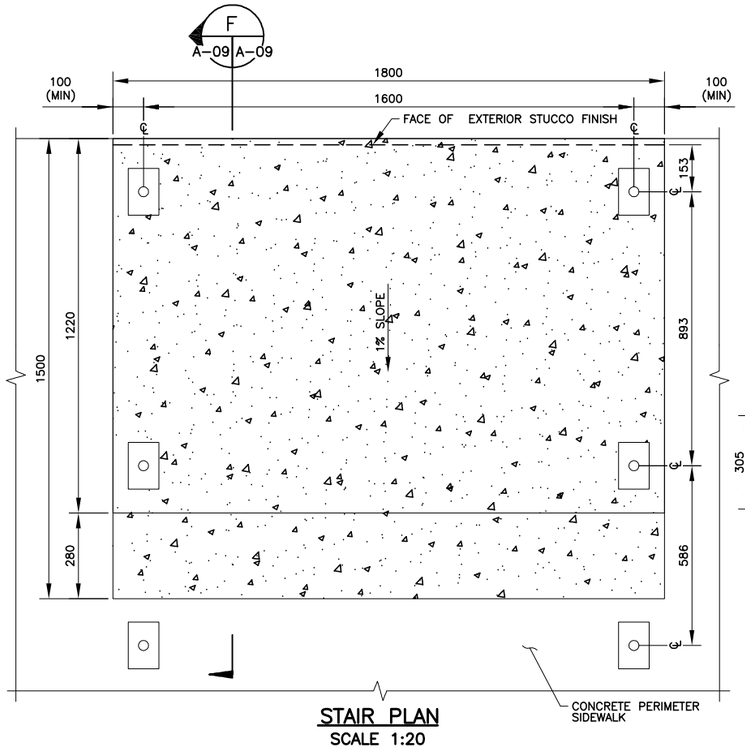

STAIR PLAN
SCALE 1:20

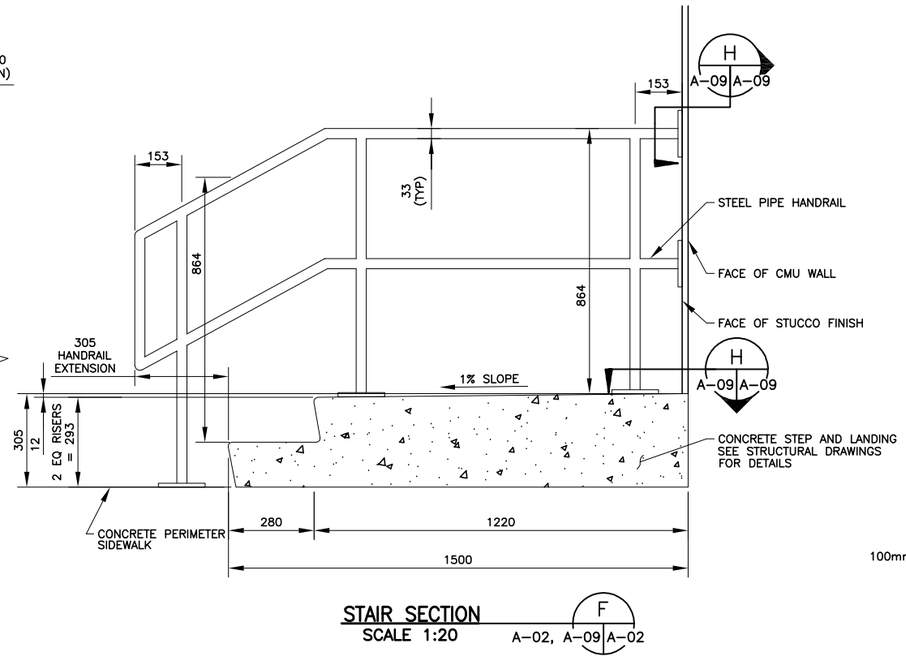

STAIR SECTION
SCALE 1:20
F
A–02, A–09 A–02

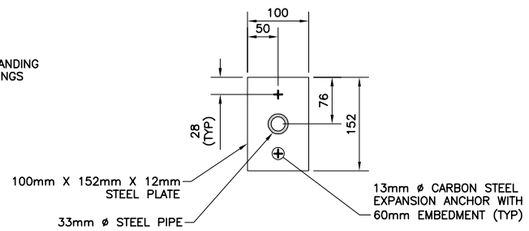

STEEL PLATE DETAIL
SCALE 1:20
H
A–09 A–09

UNLESS OTHERWISE NOTED, LINEAR DIMENSIONS SHOWN ARE IN MILLIMETERS.

This project was made possible by the United States Agency for International Development and the generous support of the American People through USAID Global Architecture and Engineering IQC Contracts.

BID DOCUMENT SUBMITTAL

SYMB	DATE	SUBMITTAL/REVISION DESCRIPTION
	09/09/10	BID DOCUMENT SUBMITTAL
	07/06/10	100% DESIGN SUBMITTAL
	05/28/10	95% DESIGN SUBMITTAL
BRG		
APR		

DESIGNED BY: SL
DRAWN BY: SL
CHECKED BY: GH
DATE: 09/09/2010
SUBMITTED BY: TETRA TECH
CAD FILE NAME: LT0005–A–09

USAID FROM THE AMERICAN PEOPLE

A E S P

USAID – OIEE
GHAZI BOYS HIGH SCHOOL (GBHS)
PUMP HOUSE STAIR DETAILS AND SCHEDULES

SHEET REFERENCE NUMBER:
LT0005
A–09

Z:\127–1298–10001\Work Orders\WO–LT\WO–LT–0005 GBHS Utility Design\CAD\Conceptual\Architecture\DWG\LT0005–A–09.dwg 9/8/2010 4:20:43 PM Harris, Jessica

GENERAL:

1. THE ELEVATIONS SHOWN ON THE STRUCTURAL DRAWINGS ARE FOR REFERENCE ONLY. FINISHED FLOOR IS ELEVATION IS ASSUMED, SEE ARCHITECTURAL DRAWING FOR ELEVATIONS. ALL LINEAR DIMENSIONS ARE MILLIMETERS UNLESS NOTED OTHERWISE (U.N.O.).
2. ALL DIMENSIONS AND CONDITIONS MUST BE VERIFIED BY THE CONTRACTOR IN THE FIELD AND ANY DISCREPANCIES SHALL BE BROUGHT TO THE ATTENTION OF THE ON-SITE AUTHORIZED REPRESENTATIVE BEFORE PROCEEDING WITH THE AFFECTED PORTION OF THE WORK.
3. THE CONTRACTOR SHALL INFORM THE ON-SITE AUTHORIZED REPRESENTATIVE OF ALL DISCREPANCIES BETWEEN DRAWINGS OF DIFFERENT TRADES, PRIOR TO INITIATION OF ANY WORK.
4. OPENINGS IN FLOORS, ROOFS OR WALLS LESS THAN 300 mm ARE TYPICALLY NOT SHOWN ON THE DRAWINGS. OPENINGS SHOWN ON THE STRUCTURAL DRAWINGS ARE FOR REFERENCE ONLY. THE CONTRACTOR SHALL COORDINATE ALL CHASES, INSERTS, OPENINGS, AND ADDITIONAL WORK SHOWN ON THE ARCHITECTURAL, PLUMBING AND ELECTRICAL DRAWINGS.
5. THE CONTRACTOR SHALL IMMEDIATELY NOTIFY THE AUTHORIZED ON-SITE REPRESENTATIVE WHEN, IN THE COURSE OF CONSTRUCTION, CONDITIONS ARE UNCOVERED WHICH ARE UNANTICIPATED OR OTHERWISE APPEAR TO PRESENT A DANGEROUS CONDITION.
6. STRUCTURAL DRAWINGS SHALL BE USED IN CONJUNCTION WITH CIVIL, ARCHITECTURAL, PLUMBING, MECHANICAL DESIGN AND SHOP DRAWINGS.
7. SECTIONS AND DETAILS SHOWN ON ANY DRAWING ARE TO BE CONSIDERED TYPICAL FOR ALL SIMILAR CONDITIONS.
8. WORK NOT INDICATED ON THE DRAWINGS, BUT REASONABLY IMPLIED TO BE SIMILAR TO THAT SHOWN AT CORRESPONDING LOCATIONS, SHALL BE INCLUDED.

DESIGN LOADS:

ALL LOADS ARE IN ACCORDANCE WITH THE INTERNATIONAL BUILDING CODE, 2006 U.N.O.

1. DEAD LOADS: WEIGHT OF BUILDING COMPONENTS
2. LIVE LOADS: ROOF LIVE LOAD = 98 kg/m² [20 PSF]
   ROOF SNOW LOAD (ZONE 4) = 98 kg/m² [20 PSF]
   FLOOR LIVE LOAD: = 490 kg/m² [100 PSF]
3. WIND LOADS: BASIC WIND SPEED, USING 3 SECOND GUST, 145 KPH [90MPH], EXPOSURE C AND IMPORTANCE FACTOR OF 1.0 DETERMINED FROM ANSI/ASCE 7-2005.
4. SEISMIC DESIGN: BAGRAM, AFGHANISTAN IS THE SEISMIC BASIS OF DESIGN. SPECTRAL ACCELERATION BASED ON Ss=1.28G AND S1=0.51G OCCUPANCY CATEGORY III, SITE CLASS D, IMPORTANCE FACTOR, (I)=1.0, DIRECTION OF SEISMIC LOAD IS IN ACCORDANCE WITH IBC-2003, 1620.2.10 DIRECTION OF SEISMIC LOAD; AND UFC 3-301-01. LATERAL FORCE RESISTING SYSTEM: SPECIAL REINFORCED CMU SHEAR WALLS.

FOUNDATIONS:

1. FOUNDATIONS HAVE BEEN DESIGNED BASED UPON AN ALLOWABLE BEARING CAPACITY OF 72 KPA [1500 PSF] AND A SUBGRADE MODULUS OF 27.145 MPa/m [100 lb/in2/in]. Ka AND Kp ARE ASSUMED TO BE 0.33 AND 3.0 RESPECTIVELY. CONTRACTOR TO VERIFY ACTUAL ALLOWABLE BEARING PRESSURE MEETS THIS MINIMUM REQUIREMENT.
2. ALL FOOTINGS SHALL BE PLACED ON NATURAL UNDISTURBED SOIL OR ON COMPACTED SELECT GRANULAR MATERIAL FILL PREPARED AS FOLLOWS:
   (A) REMOVE UNSUITABLE MATERIAL BELOW THE FOOTING AND REPLACE WITH COMPACTED SELECT GRANULAR MATERIAL FILL. TO A DEPTH DEEMED ADEQUATE BY THE GEOTECHNICAL ENGINEER TO PROVIDE FOUNDATION MATERIAL MEETING OR EXCEEDING THE REQUIREMENT STATED IN FOUNDATION NOTE 1 ABOVE.
   (B) FILL MATERIAL MUST BE PLACED IN LIFTS UP TO A MINIMUM OF 150mm IN THICKNESS. EACH LIFT COMPACTED TO A MINIMUM OF 95% OF THE MAXIMUM DRY DENSITY AS DETERMINED BY ASTM D1557 AT MOISTURE CONTENT WITHIN MINUS 1% TO PLUS 2% OF THE OPTIMUM.
3. ALL DIMENSIONS, ELEVATIONS AND EXISTING CONDITIONS SHALL BE VERIFIED IN THE FIELD
4. BEARING SOIL SHALL BE INSPECTED AND APPROVED BY THE QUALITY CONTROL ENGINEER BEFORE CONSTRUCTING ANY FOOTINGS. NO FOUNDATION CONCRETE SHALL BE PLACED IN WATER OR ON FROZEN SUBGRADE MATERIAL.
5. ALL PERIMETER SPREAD FOOTINGS SHALL BE FOUNDED AT LEAST 800 mm BELOW ADJACENT FINISHED GRADE, IF APPLICABLE U.N.O.
6. IT SHALL BE THE RESPONSIBILITY OF THE CONTRACTOR TO PROVIDE TEMPORARY SUPPORT AS NECESSARY DURING EXCAVATION AND UNDERPINNING TO MAINTAIN THE INTEGRITY OF ANY ADJACENT EXISTING STRUCTURES AND/OR INFRASTRUCTURE.
7. INTERIOR FLOOR SLABS ON GRADE SHALL BE UNDERLAIN BY A VAPOR BARRIER AND A MINIMUM OF 150mm OF 13mm CRUSHED STONE PLACED OVER COMPACTED STRUCTURAL FILL OR NATURAL SUBGRADE.
8. THE VAPOR BARRIER SHALL BE A POLYETHYLENE SHEET OF 0.15mm MIN. THICKNESS. LAP ALL JOINTS 150 mm MIN AND SEAL WATERTIGHT BY SEALANT APPLIED BETWEEN OVERLAPPING EDGES AND ENDS.
9. FOUNDATION DESIGN SHALL BE MODIFIED BY THE CONTRACTOR IF THE EXISTING SOIL CONDITIONS DO NOT MEET THE MINIMUM REQUIREMENTS, AND IF LOADING CRITERIA DIFFERS FROM WHAT IS PRESENTED HEREIN.

CAST IN PLACE CONCRETE:

1. CONCRETE WORK SHALL CONFORM TO:
   ACI 301-05 – SPECIFICATIONS FOR STRUCTURAL CONCRETE.
   ACI 318-08 – BUILDING CODE REQUIREMENTS FOR STRUCTURAL CONCRETE AND COMMENTARY.
2. CONCRETE SHALL HAVE A MINIMUM CONCRETE COMPRESSIVE STRENGTH AT 28 DAYS, F'C = 28 MPa (4000 PSI). THE MAXIMUM WATER-CEMENT RATIO OF 0.45 (BY WEIGHT). ALL CONCRETE EXPOSED TO WEATHER SHALL BE AIR-ENTRAINED.
3. CONCRETE SHALL BE CONTROLLED NORMAL WEIGHT CONCRETE, PROPORTIONED, MIXED AND PLACED UNDER THE SUPERVISION OF AN APPROVED QUALITY CONTROL ENGINEER.
4. THE FOLLOWING MINIMUM CONCRETE COVER SHALL BE PROVIDED FOR REINFORCING:

(A) CONCRETE PLACED AGAINST THE EARTH	75mm
(B) SIDES OF FOOTINGS, WALLS, PIERS & GRADE BEAMS	
18 ø BAR AND LARGER	50mm
16 ø BAR AND SMALLER	40mm
(C) BEAMS AND COLUMNS	40mm
(D) ELEVATED SLABS, WALLS, AND SLABS-ON-GRADE (FROM TOP)	25mm

5. CHAMFER EXPOSED EDGES 20mm U.N.O.
6. ALL REINFORCING STEEL SHALL BE DEFORMED BARS CONFORMING TO ASTM A615, GRADE 60. SEE SPLICE TABLE FOR LAP LENGTHS. MINIMUM YIELD STRENGTH FY = 4218 kg/cm²
7. DO NOT WELD OR BEND REINFORCEMENT IN FIELD UNLESS SPECIFICALLY SHOWN OR APPROVED BY ENGINEER.
8. REINFORCING BARS EXTEND 12 BAR DIAMETERS BUT NOT LESS THAN 300mm BEYOND BEND U.N.O.
9. NO BARS SHALL BE CUT OR OMITTED IN THE FIELD BECAUSE OF SLEEVES, DUCT OPENINGS OR RECESSES. BARS MAY BE MOVED ASIDE WITHOUT CHANGE IN LEVEL WITH THE APPROVAL OF THE QUALITY CONTROL ENGINEER.
10. REINFORCEMENT STEEL SHALL BE CONTINUOUS THROUGH ALL CONSTRUCTION JOINTS. ALL CONSTRUCTION JOINTS SHALL BE KEYED U.N.O.
11. WHERE VERTICAL CONSTRUCTION JOINTS ARE NOT SHOWN, OR WHEN ALTERNATE LOCATIONS ARE PROPOSED, DRAWINGS SHOWING LOCATION OF CONSTRUCTION JOINTS AND CONCRETE PLACING SEQUENCE SHALL BE SUBMITTED TO THE ENGINEER FOR APPROVAL PRIOR TO PREPARATION OF THE REINFORCEMENT SHOP DRAWINGS. CONSTRUCTION JOINTS SHALL BE LOCATED IN THE MIDDLE THIRD OF THE BEAM OR SLAB SPAN. CONCRETE SHALL BE PLACED WITHOUT HORIZONTAL CONSTRUCTION JOINTS U.N.O.
12. ALL KEYS SHALL BE 50mm BY 100mm NOMINAL U.N.O.
13. CONSTRUCTION JOINTS BETWEEN INTERIOR SLABS ON GRADE AND VERTICAL SURFACES SHALL CONSIST OF ASPHALT-SATURATED FELT, EXTENDING THE FULL DEPTH OF THE SLAB. EXPANSION JOINT FILLERS SHALL BE PREFORMED MATERIALS CONFORMING TO ASTM D994.
14. DETAILING, FABRICATION, AND ERECTION OF REINFORCEMENT SHALL CONFORM TO ACI 318 BUILDING CODE REQUIREMENTS FOR STRUCTURAL CONCRETE, ACI 315 DETAILS AND DETAILING OF CONCRETE REINFORCEMENT, AND CRSI MANUAL OF STANDARD PRACTICE.
15. CONTRACTOR SHALL COORDINATE LOCATIONS OF FLOOR DRAINS, PIPING, ELECTRICAL CONDUITS, GROUNDS, SLEEVES, INSERTS, ETC. WITH CONCRETE CONSTRUCTION. NO PIPES SHALL PASS THROUGH CONCRETE WITHOUT THE PERMISSION OF THE AUTHORIZED REPRESENTATIVE. STEEL PIPE SLEEVES SHALL BE PROVIDED AND SPACED A MINIMUM OF THREE PIPE DIAMETERS ON CENTER. CONDUIT AND OTHER EMBEDDED ITEMS SHALL BE CLEAN AND FREE OF OIL AND OTHER FOREIGN MATTER SUCH AS LOOSE COATINGS OR RUST, PAINT AND SCALE.
16. PROVIDE ALL NECESSARY CHAIRS, CHAIR BARS, SPACERS, ETC., WIRED SECURELY TO HOLD REINFORCEMENT IN POSITION. THESE ACCESSORIES SHALL BE PLASTIC BOOTED WHERE CONCRETE IS TO BE EXPOSED TO WEATHER OR MOISTURE. WIRE TIES SHALL BE 16 GAUGE (1.5mm) OR HEAVIER BLACK ANNEALED STEEL WIRE.
17. THE CONTRACTOR SHALL SUBMIT SHOP DRAWINGS SHOWING REINFORCING STEEL PLACEMENT, SCHEDULES, SIZES, GRADES, AND SPLICING AND BENDING DETAILS. DRAWINGS SHALL SHOW SUPPORT DETAILS INCLUDING TYPES, SIZES AND SPACING.
18. REINFORCEMENT SHALL BE STORED OFF THE GROUND ON PLATFORMS, SKIDS OR OTHER SUPPORTS.
19. CONTRACTOR SHALL FOLLOW ACI-306 COLD WEATHER CONCRETING WHEN THE DAILY AMBIENT TEMPERATURES ARE 0 DEGREES C.
20. IF ODD SIZE BARS ARE NOT AVAILABLE, THE CONTRACTOR SHALL USE THE CLOSEST LARGER EVEN BAR SIZE.

MINIMUM RE-BAR SPLICE LENGTHS mm fy = 4218kg/cm² f'c = 28mpa		
BAR SIZE ø mm	TOP BARS*	OTHER BARS
10	650	500
12	850	650
16	1050	800
20	1250	950
25	2050	1600

SPLICE NOTES

1. BASED ON NORMAL WEIGHT CONCRETE, UNCOATED BARS, CLEAR SPACING NOT LESS THAN FOUR BAR DIAMETERS, AND CLEAR COVER NOT LESS THAN 40mm.
2. WHERE SPACING BETWEEN BARS IS LESS THAN FOUR BAR DIAMETERS, OR CLEAR COVER IS LESS THAN TWO BAR DIAMETERS, INCREASE SPLICE LENGTHS SHOWN BY 50%.
3. * HORIZONTAL BARS WITH MORE THAN 300mm OF CONCRETE CAST BELOW THE BARS AS DEFINED BY A.C.I. 318. WHERE HORIZONTAL WALL REINFORCEMENT IS UNIFORMLY SPACED IN A VERTICAL PLANE AT 300mm MAXIMUM SPACING, LENGTHS MAY BE AS FOR 'OTHER BARS'.

UNLESS OTHERWISE NOTED, LINEAR DIMENSIONS SHOWN ARE IN MILLIMETERS.

BEND DIAMETER SCHEDULE

db = BAR DIAMETER

D = FINISHED INSIDE BEND DIA.

D = 6 db FOR ø10mm THRU ø25mm

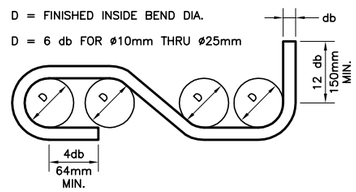

STANDARD HOOKS AND BENDS

WALL BARS SHALL BE TIED TOGETHER

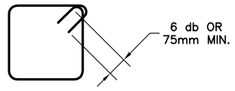

PEDESTAL TIES

SPLICES FOR SUCCESSIVE TIES TO BE PLACED AT ALTERNATE CORNERS

TYPICAL REINFORCING BAR STIRRUPS AND TIES

N.T.S.

LEGEND (FOR REINFORCING SHOWN IN PLAN OR ELEVATION)

	90° HOOK IN THE PLANE OF THE DRAWING
	90° BEND PERPENDICULAR TO THE PLANE OF THE DRAWING
	HOOK PERPENDICULAR TO THE PLANE OF THE DRAWING
	180° HOOK IN THE PLANE OF THE DRAWING
	OFFSET IN THE PLANE OF THE DRAWING

BAR SIZE	ø10	ø12	ø16	ø20	ø25
ldh	190	230	305	380	475

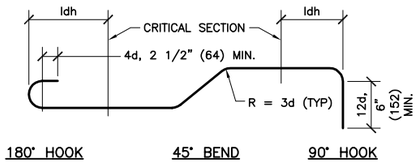

180° HOOK 45° BEND 90° HOOK

NOTE: "d" = BAR DIAMETER.

BENDS IN REINFORCING BARS

N.T.S.

ABBREVIATIONS AND SYMBOLS

ADD'L	ADDITIONAL	FIN. GR.	FINISHED GRADE	T&B	TOP AND BOTTOM
ALT.	ALTERNATE	FTG	FOOTING	T.O.	TOP OF
ARCH	ARCHITECTURAL	INFO	INFORMATION	T.O.S.	TOP OF STEEL
BOT.	BOTTOM	JT.	JOINT	TYP.	TYPICAL
B.O.	BOTTOM OF	LLH	LONG LEG HORIZONTAL	U.N.O.	UNLESS NOTED OTHERWISE
BSMT	BASEMENT	LLV	LONG LEG VERTICAL	VERT.	VERTICAL
CLR	CLEAR	MFR.	MANUFACTURER	VIF	VERIFY IN FIELD
CONT.	CONTINUOUS	MAX.	MAXIMUM		
COL	COLUMN	MIN.	MINIMUM		
COORD.	COORDINATE	N-S	NORTH-SOUTH		
CTR.	CENTER	NO.	NUMBER		
DEMO	DEMOLITION	O.C.	ON CENTER		
DIA.	DIAMETER	O.D.	OUTSIDE DIAMETER		
DN	DOWN	OPN'G	OPENING		
DWG	DRAWING	PL	PLATE		
E-W	EAST-WEST	PROP.	PROPOSED		
E.F.	EACH FACE	PSF	POUNDS PER SQUARE FOOT		
EL.	ELEVATION	REINF.	REINFORCING		
EOD	EDGE OF DECK	SIM	SIMILAR		
EOS	EDGE OF SLAB	SQ.	SQUARE		
EQ.	EQUAL	SS	STAINLESS STEEL		
E.W.	EACH WAY	STD	STANDARD		
EXIST	EXISTING	STIFF	STIFFENER		
FDN	FOUNDATION	STRUCT	STRUCTURAL		

CONSTRUCTION JOINT
DIRECTION OF SPAN
DIRECTION OF SLOPE
℄ PLATE
℄ CENTERLINE
DO DITTO
℄ SIDEWALL LINE

BID DOCUMENT SUBMITTAL

SYMB	DATE	SUBMITTAL/REVISION DESCRIPTION
BRG	09/09/10	BID DOCUMENT SUBMITTAL
BRG	09/09/10	MISCELLANEOUS REVISIONS
	06/30/10	FINAL DESIGN SUBMITTAL
APR	05/28/10	95% DESIGN SUBMITTAL

This project was made possible by the United States Agency for International Development and the generous support of the American People through USAID Global Architecture and Engineering IQC Contracts.

DESIGNED BY: FRS | DATE: 09/09/2010
DRAWN BY: AC | SUBMITTED BY: TETRA TECH
CHECKED BY: SCW | CAD FILE NAME: LT0005-S-01.1

USAID FROM THE AMERICAN PEOPLE

AESP

USAID – OIEE
GHAZI BOYS HIGH SCHOOL (GBHS)
PUMP HOUSE
STRUCTURAL GENERAL NOTES
SHEET 1 OF 2

SHEET REFERENCE NUMBER:
LT0005
S-01.1

Z:\127-1298-10001\Work Orders\WO-LT\WO-LT-0005 GBHS Utility Design\CAD\Conceptual\Structural\LT0005-S-01.1.dwg 9/8/2010 4:27:22 PM Harris, Jessica

STRUCTURAL STEEL:

1. ALL STRUCTURAL STEEL WORK SHALL CONFORM TO:
   AISC – CODE OF STANDARD PRACTICE FOR STEEL BUILDING AND BRIDGES, 13TH EDITION
   AISC – SPECIFICATION FOR STRUCTURAL STEEL BUILDINGS
   AWS D1.1–96 – STRUCTURAL WELDING CODE – STEEL
   AISC SPECIFICATION FOR STRUCTURAL JOINTS USING ASTM A325 BOLTS

2. STRUCTURAL STEEL SHALL CONFORM TO:
   A. W SHAPES, ANGLES, PLATES AND BARS SHALL CONFORM TO ASTM A36, MIN. YIELD STRENGTH = 2531 kg/cm² (36 KSI).
   B. CONNECTION BOLTS SHALL CONFORM TO ASTM A325.
   C. ANCHOR BOLTS SHALL CONFORM TO ASTM A 307 USING A 36 STEEL.
   D. WELDED HOOKED OR HEADED STUDS SHALL CONFORM TO AWSD1.1 – TYPE B
   E. STUD SHEAR CONNECTORS SHALL CONFORM TO THE REQUIREMENTS OF ASTM A108
   F. STRUCTURAL STEEL TUBE (HSS) SHALL CONFORM TO ELECTRIC RESISTANCE WELDED OR SEAMLESS PER DIN, BS, AISC, OR EN STANDARDS, WITH MINIMUM YIELD STRENGTH OF 290 MPa.

3. ALL WELDING SHALL BE DONE BY APPROVED WELDERS WITH E70XX ELECTRODES. WELDS SHALL DEVELOP THE FULL STRENGTH OF THE MATERIALS BEING WELDED, U.N.O. MINIMUM FILLET WELD SHALL BE 5mm. UNLESS SPECIFIED ON THE DRAWINGS ALL WELDING SHALL BE SHOP WELDED. THERE SHALL BE NO STRUCTURAL STEEL FIELD WELDING WITHOUT WRITTEN APPROVAL FROM THE AUTHORIZED REPRESENTATIVE.

4. FIELD CUTTING OF STRUCTURAL STEEL OR ANY FIELD MODIFICATIONS OF STRUCTURAL STEEL SHALL NOT BE MADE WITHOUT PRIOR WRITTEN APPROVAL OF THE ENGINEER FOR EACH SPECIFIC CASE.

5. NON–SHRINK GROUT SHALL BE USED BELOW THE BEARING PLATES.

6. THE CONTRACTOR SHALL SUBMIT SHOP DRAWINGS SHOWING MATERIAL, SIZES, SPACING AND LOCATIONS OF STRUCTURAL MEMBERS AND CONNECTIONS FOR REVIEW. INDICATE WELDED CONNECTIONS AND NET WELD LENGTHS.

7. SPLICING STRUCTURAL MEMBERS WHERE NOT DETAILED ON THE DRAWINGS IS PROHIBITED WITHOUT PRIOR APPROVAL OF THE AUTHORIZED REPRESENTATIVE.

8. THE CONTRACTOR SHALL SUPPLY ALL PLATES, CLIPS, SEAT ANGLES, CONNECTIONS ETC., AS REQUIRED FOR COMPLETION OF THE STRUCTURAL WORK. EVEN IF SUCH ITEMS ARE NOT EXPLICITLY CALLED FOR ON THE ARCHITECTURAL OR STRUCTURAL DRAWINGS.

9. ALL STEEL EXPOSED TO WEATHER SHALL BE HOT DIP GALVANIZED PER ASTM A123. ALL BOLTS EXPOSED TO WEATHER SHALL BE HOT DIP GALVANIZED PER ASTM A153. UNLESS NOTED OTHERWISE IN THE ARCHITECTURAL AND STRUCTURAL DRAWINGS.

10. CONNECTIONS NOT DETAILED IN THESE PLANS SHALL BE DESIGNED BY THE STEEL FABRICATOR AS "SIMPLE TYPE 2" CONNECTIONS AND SHALL RESIST AN END REACTION "R" FOR THE SPECIFIC BEAM SIZE FROM "AISC MANUAL OF STEEL CONSTRUCTION (13TH EDITION)" TABLES ENTITLED "ALLOWABLE LOADS ON BEAMS."

11. ALL STRUCTURAL STEEL SHALL BE DETAILED, FABRICATED AND ERECTED IN ACCORDANCE WITH AISC'S "SPECIFICATION FOR STRUCTURAL STEEL BUILDINGS," LATEST EDITION.

12. IF AISC STRUCTURAL STEEL MEMBERS ARE NOT AVAILABLE, THE CONTRACTOR SHALL SUBMIT A RECOMMENDED EQUIVALENT TO THE AUTHORIZED REPRESENTATIVE FOR REVIEW AND APPROVAL PRIOR TO PROCUREMENT AND FABRICATION.

STEEL DECKING:

1. STEEL DECK SHALL FLAT ROLLED CARBON STEEL SHEET WITH PROFILE AS SHOWN ON THE PLANS.
2. SHEET STEEL FOR GALVANIZED DECK SHALL CONFORM TO ASTM A653, GRADE 80 STRUCTURAL QUALITY, WITH A MINIMUM YIELD STRENGTH OF 230 MPa.
3. ACCESSORIES SHALL BE OF SAME MATERIAL AS DECK, UNLESS SPECIFIED OTHERWISE.
4. STEEL DECKS SHALL HAVE A MINIMUM BEARING LENGTH OF 38mm, OR AS PER THE DECKING MANUFACTURER'S RECOMMENDATIONS.
5. FASTEN FLOOR DECK UNITS TO THE STEEL SUPPORTING MEMBERS USING #10 SCREWS AT 450mm MAX O.C.
6. STEEL DECK UNITS SHALL SPAN THREE OR MORE SPANS WHERE POSSIBLE.

MASONRY:

1. CONCRETE MASONRY CONSTRUCTION, SHALL CONFORM TO SPECIFICATION FOR CONCRETE MASONRY CONSTRUCTION (ACI 530.1/ASCE–5/TMS 602) & BUILDING CODE REQUIREMENT FOR MASONRY STRUCTURES (ACI530/ASCE–5/TMS 402, 2008).
2. ALL CONCRETE MASONRY UNITS (CMU) SHALL CONFORM TO ASTM C 90, TYPE I, NORMAL WEIGHT.
3. CONCRETE MASONRY UNITS SHALL BE A MINIMUM UNIT COMPRESSIVE STRENGTH OF 141 kg/cm² (2000 PSI) MEASURED ON THE NET SECTION AS DETERMINED BY THE UNIT TEST METHOD IN ACCORDANCE WITH ASTM C 140. THE MINIMUM COMPRESSIVE STRENGTH OF MASONRY(f'm) SHALL BE 105 kg/cm² (1500 PSI) AT 28 DAYS, MEASURED ON THE NET SECTION.
4. MORTAR SHALL BE TYPE S CONFORMING TO ASTM C 270, AND HAVE A MINIMUM 28 DAY COMPRESSIVE STRENGTH OF 141 kg/cm² (2,000 PSI).
5. GROUT SHALL CONFORM TO ASTM C 476, FINE TYPE, AND SHALL HAVE A MINIMUM 28 DAY COMPRESSIVE STRENGTH OF 176 kg/cm² (2500 PSI).
6. BONDING METHODS, TIES, AND ACCESSORIES SHALL BE APPROVED BY THE ENGINEER.
7. CMU MASONRY DETAILS, ELEVATIONS AND NOTES APPLY TO ALL CMU EXTERIOR AND INTERIOR WALLS U.N.O. EXTERIOR AND INTERIOR WALLS CONSIST OF A SINGLE CMU WIDTH U.N.O.
8. VERTICAL REINFORCING SHALL EXTEND TO 50mm BELOW THE TOP OF THE CMU WALL.
9. REINFORCING BARS TO EXTEND 12 BAR DIAMETERS BUT NOT LESS THAN 300mm BEYOND BEND U.N.O.
10. AT OPENINGS WIDER THAN 300mm IN CMU WALLS, PROVIDE CMU LINTELS PER TYPICAL CMU LINTEL DETAIL U.N.O. AND ADDITIONAL REINFORCING FULL HEIGHT AT JAMBS DETAIL.
11. REINFORCING BARS SHALL CONFORM TO ASTM A 615, GRADE 60. MINIMUM YIELD STRENGTH FY = 4218 kg/cm²
12. CONCRETE MASONRY UNITS SHALL BE LAID IN RUNNING (COMMON) BOND, U.N.O.
13. ALL WALLS CONSTRUCTED OF CONCRETE MASONRY BLOCKS SHALL BE REINFORCED VERTICALLY AS INDICATED ON THE STRUCTURAL DRAWINGS. REINFORCEMENT SHALL BE LOCATED IN THE CENTER OF WALL U.N.O. BAR POSITIONERS SHALL BE SUPPLIED FOR VERTICAL REINFORCING. SPLICE VERTICAL BARS PER WALL SECTION DETAIL AND TIE WITH ANNEALED WIRE. FILL ALL CELLS WITH GROUT (ASTM C 476). GROUT CELLS IN MAXIMUM LIFT HEIGHT OF 1200mm. ALL REINFORCED CMU SHALL BE TWO–CELL UNITS.
14. FOR MASONRY FINISHING, SEE ARCHITECTURAL DRAWINGS.

UNLESS OTHERWISE NOTED, LINEAR DIMENSIONS SHOWN ARE IN MILLIMETERS.

BID DOCUMENT SUBMITTAL

This project was made possible by the United States Agency for International Development and the generous support of the American People through USAID Global Architecture and Engineering IQC Contracts.

SYMB	DESCRIPTION	DATE	
	BID DOCUMENT SUBMITTAL	09/09/10	BRG
	MISCELLANEOUS REVISIONS	09/09/10	BRG
	FINAL DESIGN SUBMITTAL	06/30/10	
	95% DESIGN SUBMITTAL	05/28/10	APR

SUBMITTAL/REVISION

DESIGNED BY: FRS | DRAWN BY: AC | CHECKED BY: SGW
DATE: 09/09/2010
SUBMITTED BY: TETRA TECH
CAD FILE NAME: LT0005–S–01.2

USAID FROM THE AMERICAN PEOPLE

AESP

USAID – OIEE
GHAZI BOYS HIGH SCHOOL (GBHS)
PUMP HOUSE
STRUCTURAL GENERAL NOTES
SHEET 2 OF 2

SHEET REFERENCE NUMBER:
LT0005
S–01.2

Z:\127-1298-10001\Work Orders\WO-LT\WO-LT-0005 GBHS Utility Design\CAD\Conceptual\Structural\LT0005-S-01.2.dwg 9/8/2010 4:36:09 PM Harris, Jessica

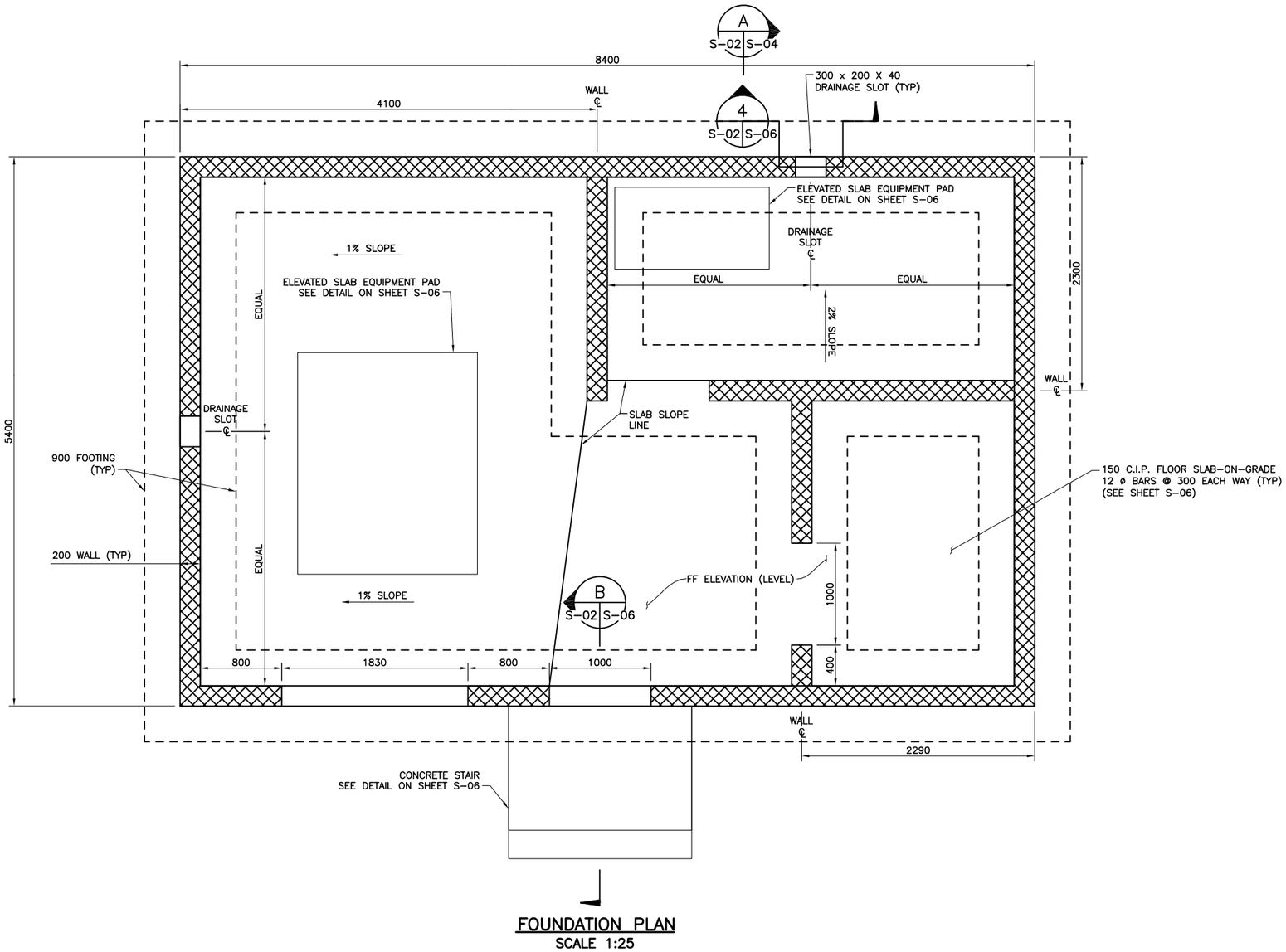

FOUNDATION PLAN
SCALE 1:25

UNLESS OTHERWISE NOTED, LINEAR
DIMENSIONS SHOWN ARE IN MILLIMETERS.

1 .50 0 1 1.5
1:25

BID DOCUMENT SUBMITTAL

SYMB	DESCRIPTION	DATE	APR
	BID DOCUMENT SUBMITTAL	09/09/10	BRG
	FINAL DESIGN SUBMITTAL	06/30/10	
	95% DESIGN SUBMITTAL	05/28/10	

This project was made possible by the United States Agency for International Development and the generous support of the American People through USAID Global Architecture and Engineering IQC Contracts.

DESIGNED BY: FPH
DRAWN BY: SL
CHECKED BY: SGW
DATE: 09/09/2010
SUBMITTED BY: TETRA TECH
CAD FILE NAME: LT0005-S-02

USAID FROM THE AMERICAN PEOPLE

AESP

USAID - OIEE
GHAZI BOYS HIGH SCHOOL (GBHS)
PUMP HOUSE
FOUNDATION PLAN

SHEET REFERENCE NUMBER:
LT0005
S-02

Z:\127-1298-10001\Work Orders\WO-LT\WO-LT-0005 GBHS Utility Design\CAD\Conceptual\Structural\LT0005-S-02.dwg 9/8/2010 4:39:22 PM Harris, Jessica

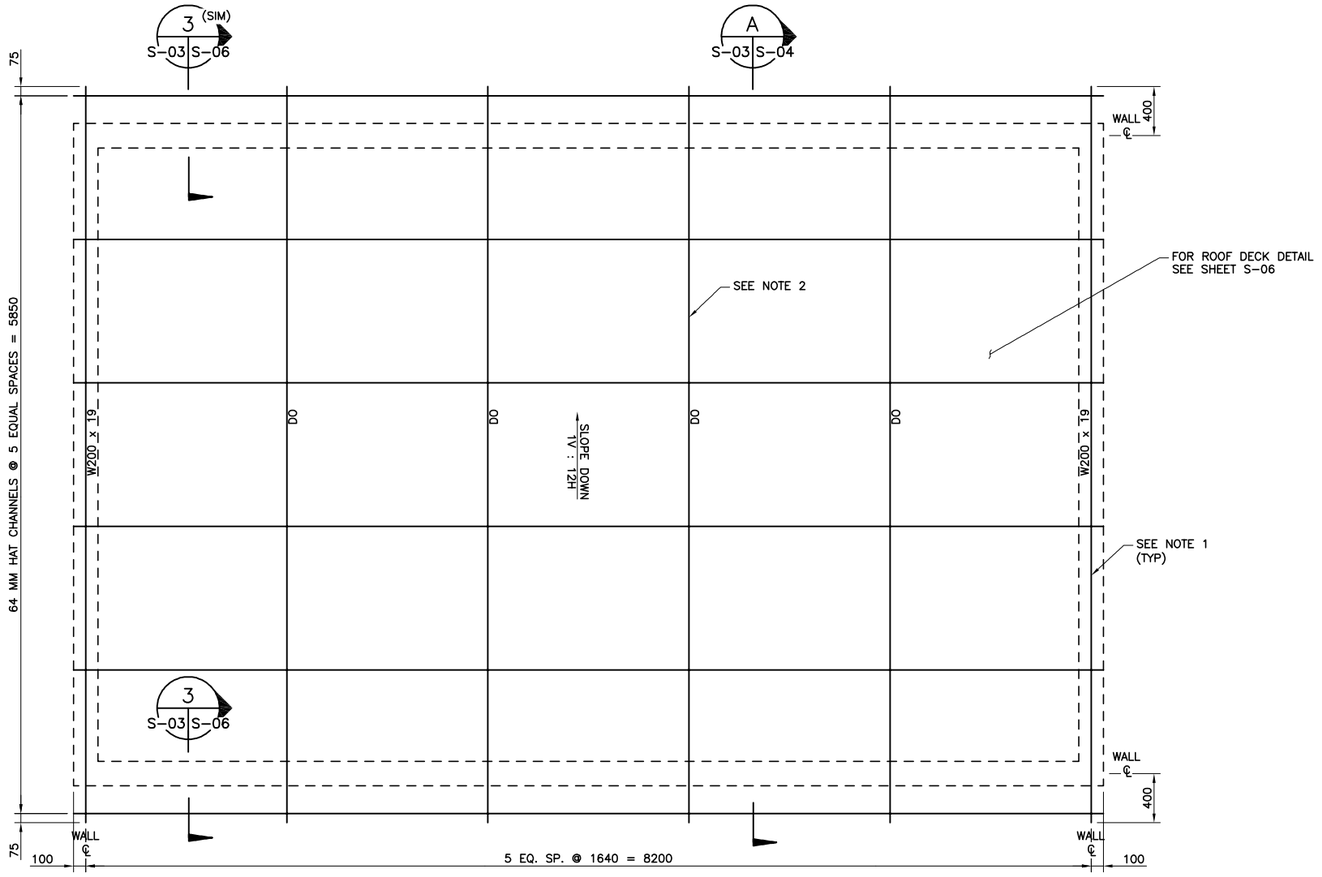

NOTE:
SEE SHEET S-04 FOR STEEL CHANNEL AND CEILING TUBE SPACING.

ROOF FRAMING PLAN
SCALE 1:25

NOTES:

1. BOLT END BEAMS TO WALL WITH HOLD DOWN ANCHORS @ 1500 MAX SPACING.
2. CONNECT ROOF BEAM TO INTERIOR WALL WITH ONE HOLD DOWN BOLT AT EACH INTERSECTION.

1 .50 0 1 1.5
1:25

UNLESS OTHERWISE NOTED, LINEAR DIMENSIONS SHOWN ARE IN MILLIMETERS.

This project was made possible by the United States Agency for International Development and the generous support of the American People through USAID Global Architecture and Engineering IQC Contracts.

BID DOCUMENT SUBMITTAL

SYMB	SUBMITTAL/REVISION DESCRIPTION	DATE	APR
	BID DOCUMENT SUBMITTAL	09/09/10	BRG
	FINAL DESIGN SUBMITTAL	06/30/10	
	95% DESIGN SUBMITTAL	05/28/10	

DESIGNED BY: FPH
DRAWN BY: SL
CHECKED BY: SGW
DATE: 09/09/2010
SUBMITTED BY: TETRA TECH
CAD FILE NAME: LT0005-S-03

USAID FROM THE AMERICAN PEOPLE

AESP

USAID – OIEE
GHAZI BOYS HIGH SCHOOL (GBHS)
PUMP HOUSE
ROOF FRAMING PLAN

SHEET REFERENCE NUMBER:
LT0005 S-03

Z:\127-1298-10001\Work Orders\WO-LT\WO-LT-0005 GBHS Utility Design\CAD\Conceptual\Structural\LT0005-S-03.dwg 9/8/2010 4:42:28 PM Harris, Jessica

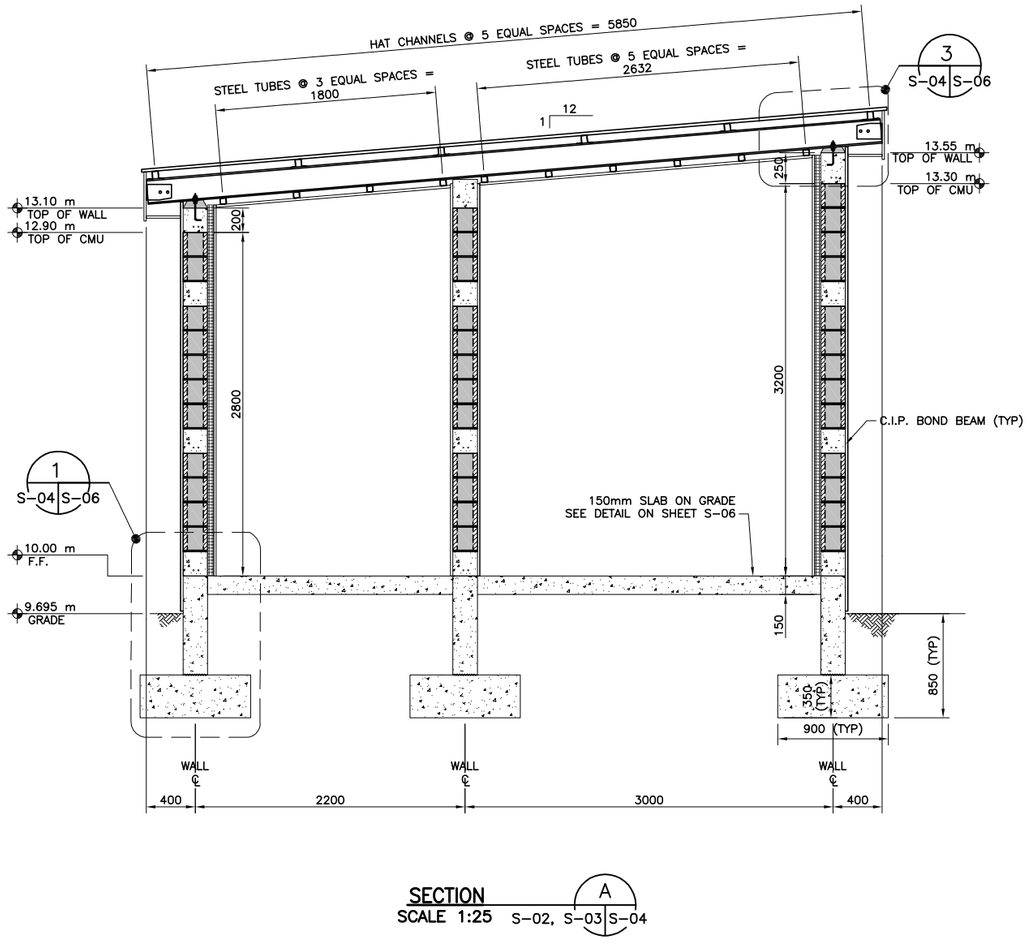

SECTION
SCALE 1:25 A S-02, S-03 S-04

UNLESS OTHERWISE NOTED, LINEAR DIMENSIONS SHOWN ARE IN MILLIMETERS.

1 .50 0 1 1.5
1:25

This project was made possible by the United States Agency for International Development and the generous support of the American People through USAID Global Architecture and Engineering IQC Contracts.

BID DOCUMENT SUBMITTAL

SYMB	DESCRIPTION	DATE	APR
	BID DOCUMENT SUBMITTAL	09/09/10	BRG
	FINAL DESIGN SUBMITTAL	06/30/10	
	95% DESIGN SUBMITTAL	05/28/10	

SUBMITTAL/REVISION

DESIGNED BY: FPH
DRAWN BY: SL
CHECKED BY: SGW
DATE: 09/09/2010
SUBMITTED BY: TETRA TECH
CAD FILE NAME: LT0005-S-04

USAID FROM THE AMERICAN PEOPLE

AESP

USAID – OIEE
GHAZI BOYS HIGH SCHOOL (GBHS)
PUMP HOUSE
SECTION

SHEET REFERENCE NUMBER:
LT0005
S-04

Z:\127-1298-10001\Work Orders\WO-LT\WO-LT-0005 GBHS Utility Design\CAD\Conceptual\Structural\LT0005-S-04.dwg 9/8/2010 4:45:20 PM Harris, Jessica

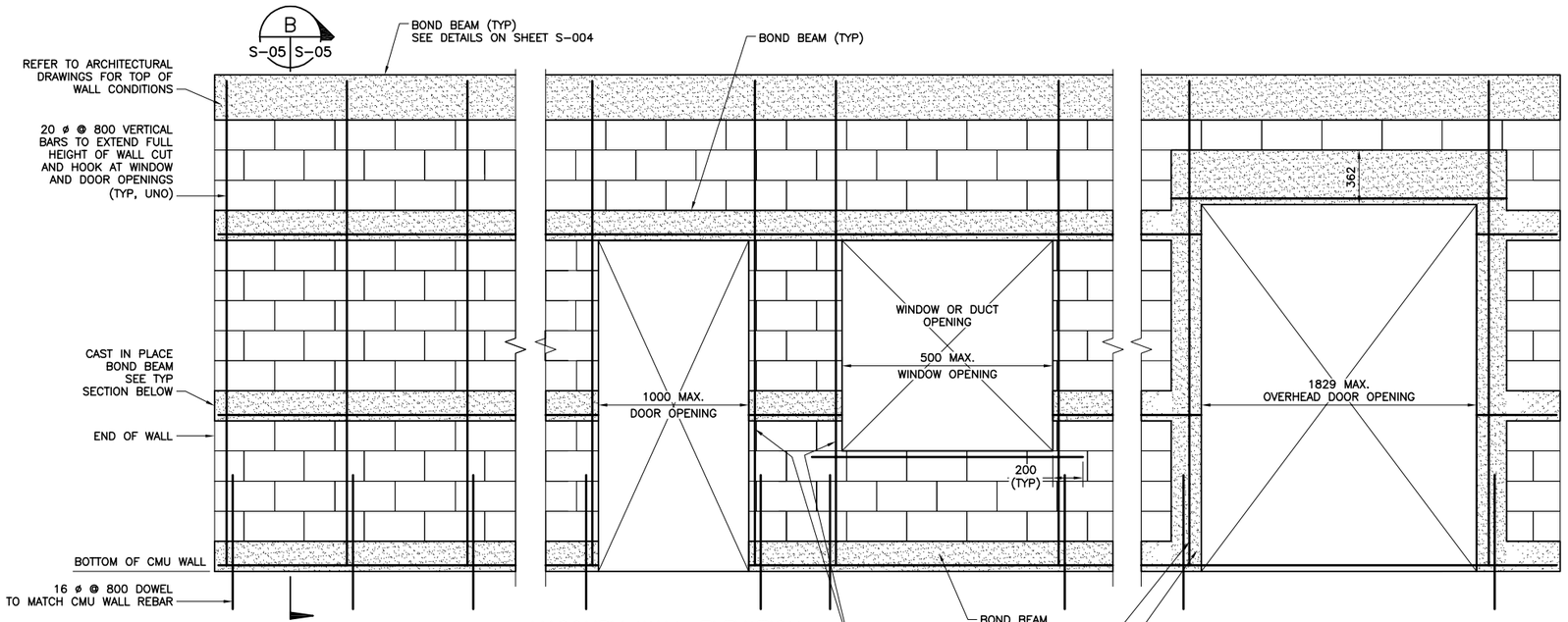

MASONRY WALL ELEVATION
N.T.S.

LAP AND EMBEDMENT SCHEDULE	
BAR SIZE	LAP
10 ø	300
12 ø	360
16 ø	628
20 ø	1090
22 ø	1510
25 ø	2320

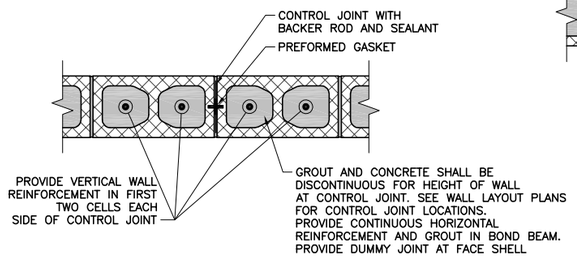

CONTROL JOINT DETAIL AT STRAIGHT WALL
SCALE 1:10

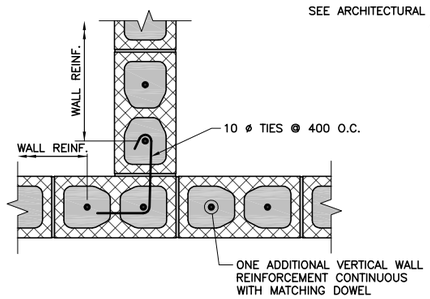

TYPICAL CMU WALL INTERSECTION
SCALE 1:10

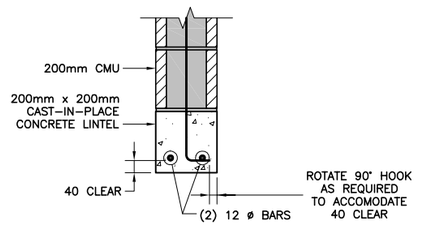

LINTEL/BOND BEAM DETAIL
SCALE 1:10

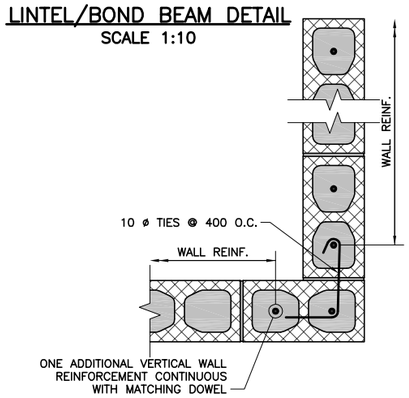

NOTE: ALL MASONRY UNIT CELLS SHALL BE GROUTED FULLY.

TYPICAL CMU WALL CORNER
SCALE 1:10

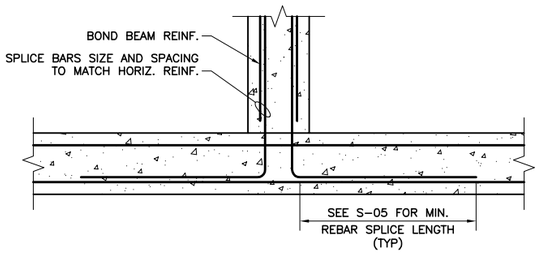

NOTE: SEE CONCRETE LINTEL NOTES 1 AND 2 BELOW.

BOND BEAM INTERSECTION
SCALE 1:10

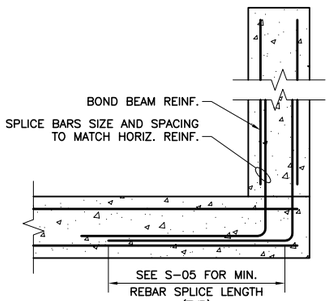

BOND BEAM CORNER AND END WALL
SCALE 1:10

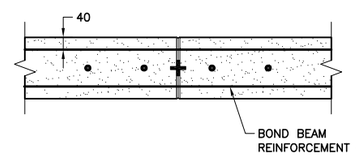

CONTROL JOINT DETAIL AT BOND BEAM – STRAIGHT WALL
SCALE 1:10

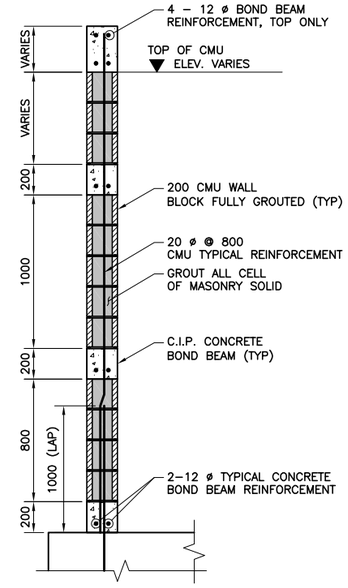

TYPICAL CMU WALL WITH BOND BEAM SECTION
SCALE 1:20

B
S-05 S-05

CONCRETE BOND BEAM/LINTEL NOTES:

1. PROVIDE 300 MINIMUM BEARING AT EACH SIDE OF CLEAR SPAN (TYP).
2. PROVIDE 400 MIN BEARING AT EACH SIDE FOR OPENING LARGER THAN 1750mm.
3. IF FULL 300mm LINTEL BEARING LENGTH IS NOT AVAILABLE, EXTEND THE LINTEL AS FAR AS POSSIBLE, PROVIDING A 90° HOOK AT THE END OF THE HORIZONTAL REINFORCEMENT.
4. VERTICAL REINFORCEMENT SHALL BE CONTINUOUS THROUGH BOND BEAMS AND LINTELS.
5. CONTROL JOINTS SHALL NOT PASS THROUGH LINTELS. AT LINTELS, OFFSET CONTROL JOINT TO THE END OF REQUIRED LINTEL BEARING AREA.
6. REFER TO ARCH. AND MECH DRAWINGS FOR LOCATIONS OF MASONRY OPENINGS U.N.O.

UNLESS OTHERWISE NOTED, LINEAR DIMENSIONS SHOWN ARE IN MILLIMETERS.

BID DOCUMENT SUBMITTAL

SYMB	DESCRIPTION	DATE	APR
	BID DOCUMENT SUBMITTAL	09/09/10	BRG
	FINAL DESIGN SUBMITTAL	06/30/10	
	95% DESIGN SUBMITTAL	05/28/10	

This project was made possible by the United States Agency for International Development and the generous support of the American People through USAID Global Architecture and Engineering IQC Contracts.

DESIGNED BY: FPH
DRAWN BY: SL
CHECKED BY: SGW
DATE: 09/09/2010
SUBMITTED BY: TETRA TECH
CAD FILE NAME: LT0005-S-05

USAID FROM THE AMERICAN PEOPLE

AESP

USAID – OIEE
GHAZI BOYS HIGH SCHOOL (GBHS)
PUMP HOUSE
TYPICAL CMU WALL DETAILS

SHEET REFERENCE NUMBER:
LT0005
S-05

Z:\127-1298-10001\Work Orders\WO-LT\WO-LT-0005 GBHS Utility Design\CAD\Conceptual\Structural\LT0005-S-05.dwg 9/8/2010 4:50:15 PM Harris, Jessica

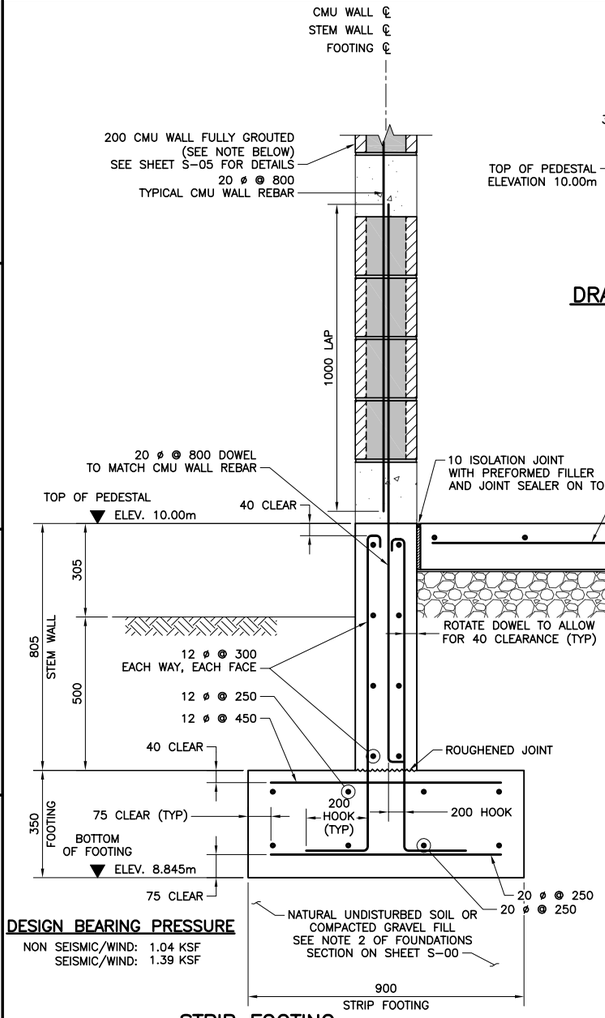

DESIGN BEARING PRESSURE

NON SEISMIC/WIND: 1.04 KSF
SEISMIC/WIND: 1.39 KSF

STRIP FOOTING TRANSVERSE SECTION

SCALE 1:10 — 1 | S-04 | S-06

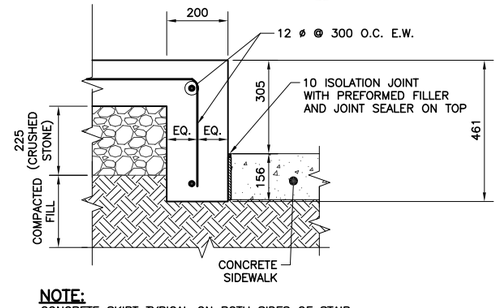

NOTE:
CONCRETE SKIRT TYPICAL ON BOTH SIDES OF STAIR.

CONCRETE STAIR AND LANDING SKIRT SECTION

SCALE 1:10 — D | S-03, S-07 | S-07

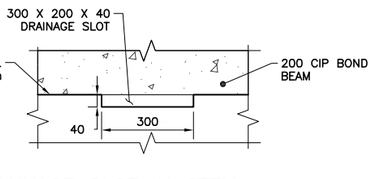

DRAINAGE SLOT IN STEM WALL DETAIL

SCALE 1:10 — 4 | S-02 | S-06

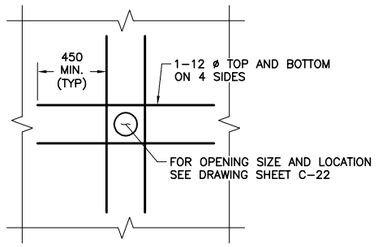

TYPICAL ADDITIONAL SLAB REBARS AROUND PIPE PENETRATION DETAIL

SCALE 1:20

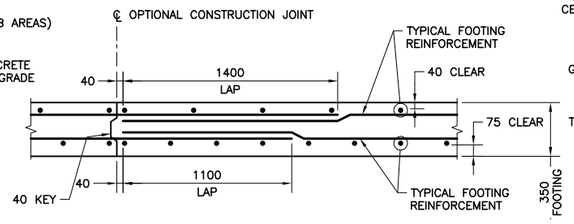

FOOTING'S OPTIONAL CONSTRUCTION JOINT DETAIL SECTION

SCALE 1:20

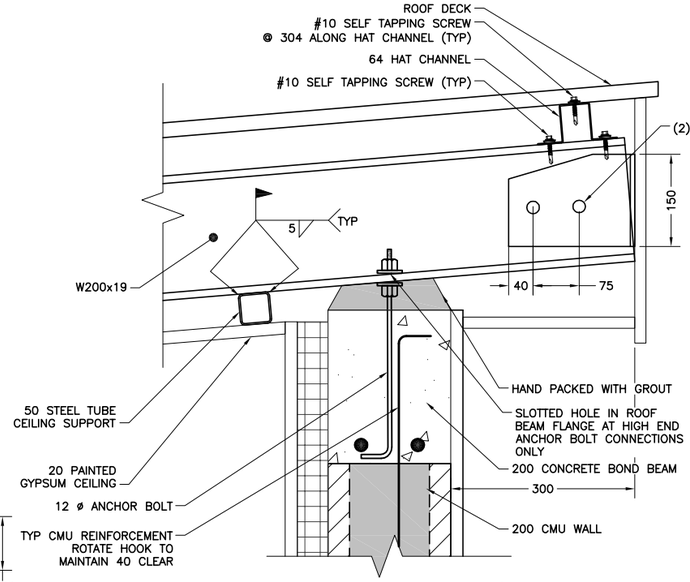

ROOF BEAM DETIAL

SCALE 1:5 — 3 | S-03, S-04 | S-06

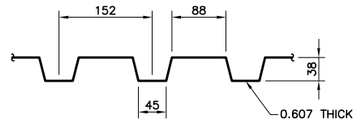

ROOF DECK DETAIL

SCALE 1:5

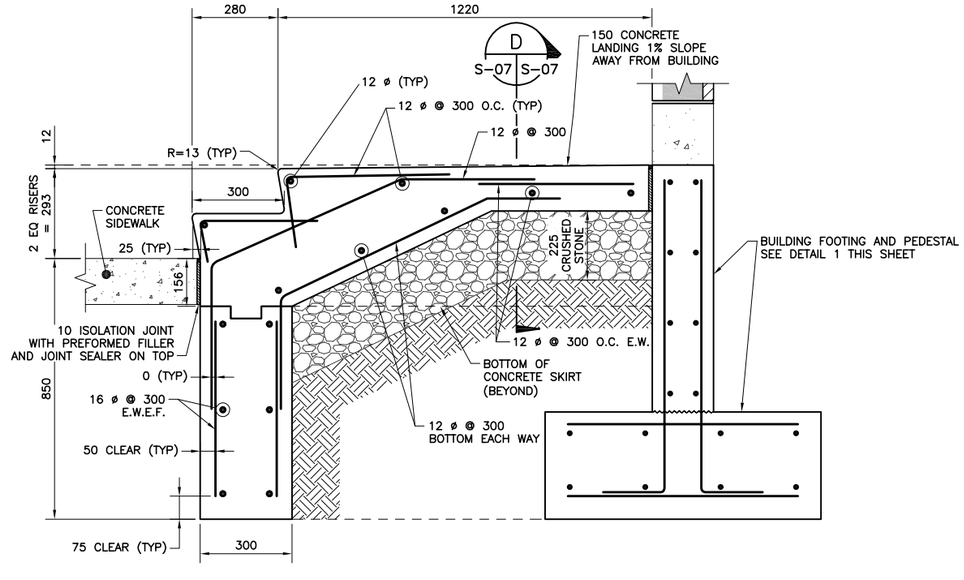

CONCRETE STAIR AND LANDING SECTION

SCALE 1:10 — C | S-03 | S-07

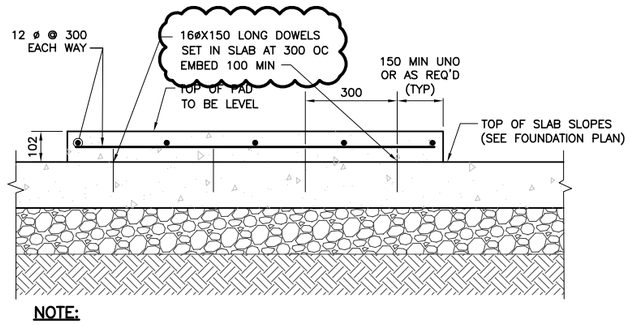

NOTE:

PAD DIMENSIONS, ANCHOR BOLTS SIZE AND LOCATIONS, AND OTHER EMBEDDED ITEMS SHALL CONFORM TO EQUIPMENT MANUFACTURER'S REQUIREMENTS. EXTEND EQUIPMENT PAD A MINIMUM OF 150mm BEYOND EQUIPMENT SKID.

TYPICAL RAISED SLAB EQUIPMENT PAD DETAIL

SCALE 1:10

UNLESS OTHERWISE NOTED, LINEAR DIMENSIONS SHOWN ARE IN MILLIMETERS.

BID DOCUMENT SUBMITTAL

SYMB	DESCRIPTION	DATE	
	BID DOCUMENT SUBMITTAL	09/09/10	BRG
	FINAL DESIGN SUBMITTAL	06/30/10	
	95% DESIGN SUBMITTAL	05/28/10	APR

This project was made possible by the United States Agency for International Development and the generous support of the American People through USAID Global Architecture and Engineering IQC Contracts.

DESIGNED BY: FPH
DRAWN BY: SL
CHECKED BY: SGW
DATE: 09/09/2010
SUBMITTED BY: TETRA TECH
CAD FILE NAME: LT0005-S-06

USAID FROM THE AMERICAN PEOPLE

AESP

USAID – OIEE
GHAZI BOYS HIGH SCHOOL (GBHS)
PUMP HOUSE
ROOF AND FOUNDATION DETAILS

SHEET REFERENCE NUMBER:
LT0005 S-06

Z:\127-1298-10001\Work Orders\WO-LT\WO-LT-0005 GBHS Utility Design\CAD\Conceptual\Structural\LT0005-S-06.dwg 9/8/2010 4:53:57 PM Harris, Jessica

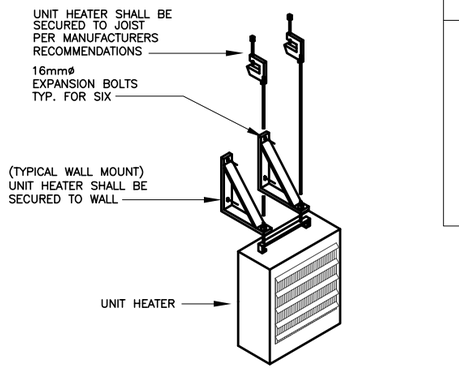

ELECTRIC UNIT HEATER DETAIL (2 / M-001 | M-001)
N.T.S.

PLAN LEGEND (MECHANICAL)

- ELECTRIC UNIT HEATER (UH)
- WALL EXHAUST FAN (EF)
- INTAKE LOUVER (L)
- LINE VOLTAGE THERMOSTAT

LEGEND
N.T.S.

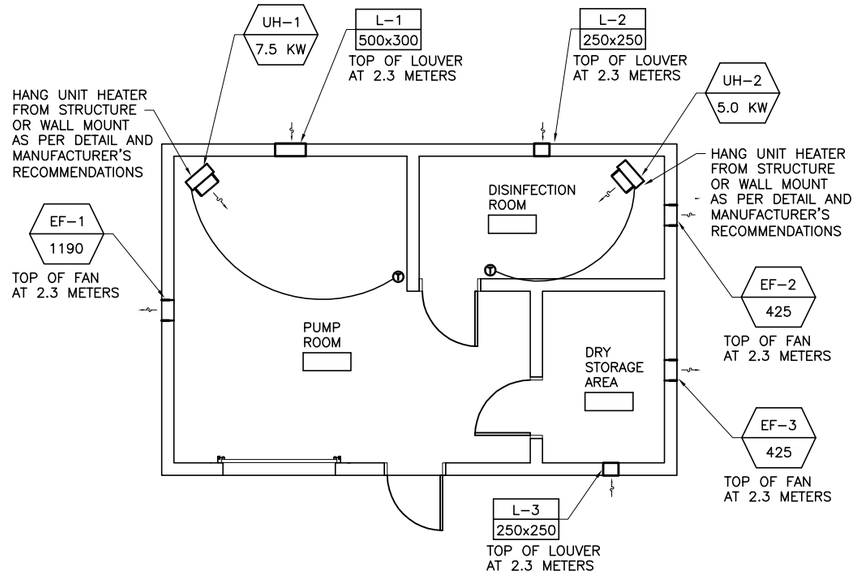

BOOSTER PUMP HOUSE (1 / M-001 | M-001)
SCALE 1:100

UNLESS OTHERWISE NOTED, LINEAR DIMENSIONS SHOWN ARE IN MILLIMETERS.

1 0 1 2 3 4 5 6 7 8 9
1:100

WALL EXHAUST FAN SCHEDULE - (EF)

DWG LABEL	SERVES	TYPE	M3/HR	FAN DATA					ELECTRICAL				NOTES
				SONES	RPM	SP (MM WG)	OPENING (SQ. MM)	DRIVE TYPE	HP	BHP WATTS	V/PH	HZ	
EF-1	PUMP ROOM	SIDE WALL PROPELLER	1190	5.9	1550	3.8	380	DIRECT	1/12	170	240/1	50	BELOW
EF-2	DISINFECTION ROOM	SIDE WALL PROPELLER	425	4.9	1550	3.8	330	DIRECT	1/25	75	240/1	50	BELOW
EF-3	DRY STORAGE AREA	SIDE WALL PROPELLER	425	4.9	1550	3.8	330	DIRECT	1/25	75	240/1	50	BELOW

NOTES:

1. PROVIDE WALL COLAR, MOTOR SIDE GUARD, BACKDRAFT DAMPER, AND 45 DEG. WEATHERHOOD FOR FLUSH, EXTERIOR MOUNTING ARRANGEMENT.
2. SEQUENCES OF OPERATION: EF-1 SHALL ENERGIZE WHEN SPACE TEMPERATURE RISES ABOVE SETPOINT. FANS EF-2 AND EF-3 SHALL RUN CONTINUOUSLY AT ALL TIMES.
3. FAN SHALL BE OF FABRICATED ALUMINUM WITH PROPELLER RIVITED TO HUB AND LOCKED TO MOTOR SHAFT. MOTOR SHALL BE PERMANENTLY LUBRICATED AND OF GALVANIZED STEEL OR PAINTED STEEL. DRIVE FRAME ASSEMBLY SHALL BE WELDED WIRE OR FORMED CHANNELS WITH DEEP FORMED INLET VENTURI SHAPE.

LOUVER SCHEDULE - (L)

DWG LABEL	SERVES	TYPE	LENGTH (MM)	HEIGHT (MM)	DEPTH (MM)	FREE AREA (%)	M3/HR	VEL. (MPM)	NOTES
L-1	PUMP ROOM	INTAKE	500	300	150	50	1190	132	BELOW
L-2	DISINFECTION ROOM	INTAKE	250	250	150	50	425	113	BELOW
L-3	DRY STORAGE AREA	INTAKE	250	250	150	50	425	113	BELOW

NOTES:

1. PROVIDE WITH ENAMEL FINISH.
2. PROVIDE WITH ALUMINUM INSECT SCREEN
3. DAMPER SHALL INCLUDE ADJUSTABLE GRAVITY INTAKE DAMPER BLADES.
4. LOUVER SHALL BE EXTRUDED ALUMINUM WITH DRAINABLE BLADES. BLADES AND FRAME SHALL BE A MINIMUM OF 2MM THICK. LOUVERS SHALL BE 150MM DEEP.

UNIT HEATER SCHEDULE - (UH)

DWG LABEL	UNIT LOCATION	TYPE	MANUFACT.	MODEL	MOUNTING HEIGHT (M)	HEATING CAPACITY				ELECTRICAL				NOTES
						M3/HR	EAT (°C)	LAT (°C)	KW	V/PH	HZ	AMPS	HP	
UH-1	PUMP ROOM	HORIZ. DISCH.	CHROMALOX	HVW-07	2.2	1450	10	38	7.5	240/1	50	31.7	1/15	BELOW
UH-2	DISINEFECTION ROOM	HORIZ. DISCH.	CHROMALOX	HVW-02	2.2	680	10	31	2.6	240/1	50	11.4	1/40	BELOW

NOTES:

1. MOUNTING HEIGHT IS TO BOTTOM OF UNIT.
2. PROVIDE WALL MOUNTED THERMOSTAT, LINE VOLTAGE
3. SEQUENCES OF OPERATION: UNIT HEATERS SHALL RUN WHENEVER SPACE TEMPERATURE THERMOSTAT FALLS BELOW SETPOINT.
4. PROVIDE INTERNAL SAFETIES AND UNIT DISCONNECT. FUSING SHALL BE FACTORY INSTALLED AND WIRED AS PER NEC REQUIREMENTS.
5. PROVIDE SWIVEL WALL MOUNTING BRACKET FROM UNIT MANUFACTURER OR CEILING MOUNT ACCORDING TO MANUFACTURER'S WRITTEN INSTALLATION INSTRUCTIONS.

EQUIPMENT SCHEDULES
N.T.S.

BID DOCUMENT SUBMITTAL

SYMB	DESCRIPTION	DATE	APR
	BID DOCUMENT SUBMITTAL	09/09/10	BRG
	100% DESIGN SUBMITTAL	07/06/10	
	95% DESIGN SUBMITTAL	05/28/10	

This project was made possible by the United States Agency for International Development and the generous support of the American People through USAID Global Architecture and Engineering IQC Contracts.

DESIGNED BY: CSR | DATE: 09/09/2010
DWN BY: CSR | SUBMITTED BY: TETRA TECH
CHK BY: RWR | FILE NO.: LT0005-M-01

USAID FROM THE AMERICAN PEOPLE
A E S P

USAID - OIEE
GHAZI BOYS HIGH SCHOOL (GBHS)
PUMP HOUSE
MECHANICAL FLOOR PLAN

SHEET REFERENCE NUMBER:
LT0005
M-01

Z:\127-1298-10001\Work Orders\WO-LT\WO-LT-0005 GBHS Utility Design\CAD\Conceptual\Electrical\DWG\143-01304-10008-M-01.dwg 9/8/2010 4:58:27 PM Harris, Jessica

POWER PLAN LEGEND

SYMBOL	DESCRIPTION
	PANELBOARD
XXX-## ###HP	MOTOR
	16A, 250V SHUKO RECEPTACLE GFI SUBSCRIPT GROUND FAULT INTERRUPTER. LABEL RECEPTACLE WITH VOLTAGE, FREQUENCY AND BRANCH CIRCUIT CONNECTED.
CR	CORD REEL
	EQUIPMENT CONNECTION
R	RELAY
J	JUNCTION BOX
T	TRANSFORMER
	GES
	LOAD DEFINED UNDER OTHER SECTIONS

ONE-LINE AND CONTROL SCHEMATIC LEGEND

SYMBOL	DESCRIPTION
##A #P	CIRCUIT BREAKER (AMP AND POLE QUANTITY)
20A	CIRCUIT BREAKER – AMPERAGE AS INDICATED
20A	FUSE – AMPERAGE AS INDICATED
	TRANSFORMER
LC#	LIGHTING CONTACTOR – NORMALLY OPEN CONTACT
LC# C	LIGHTING CONTACTOR COIL (CLOSED COIL)
LC# O	LIGHTING CONTACTOR COIL (OPEN COIL)
GEN	GENERATOR
	FUSED DISCONNECT SWITCH
	ATS: AUTO XFR SW MTS MANUAL XFR SW
	GES

ABBREVIATIONS

AFG	ABOVE FINISHED GRADE
AFF	ABOVE FINISHED FLOOR
A	AMPERE
AHU	AIR HANDLING UNIT
kAIC	AMPERE INTERRUPTING CAPACITY IN THOUSANDS
ATS	AUTOMATIC TRANSFER SWITCH
BFG	BELOW FINISHED GRADE
BLDG	BUILDING
CATV	CABLE TELEVISION
CKT	CIRCUIT
C	CONDUIT
CH	CONVECTION HEATER
CND	CONDUCTOR
COR	CONTRACTING OFFICERS REPRESENTATIVE
EF	EXHAUST FAN
EHC	ELECTRIC HEATING COIL
EP	EXPLOSION PROOF
EPO	EMERGENCY POWER OFF
ERH	ELECTRIC RADIENT HEATER
ESS	ELECTRONIC SECURITY SYSTEM
F	FAN
FACP	FIRE ALARM CONTROL PANEL
FO	FIBER OPTIC
GFI	GROUND FAULT INTERRUPTING
GFE	GOVERNMENT FURNISHED CONTRACTOR INSTALLED
HP	HORSEPOWER
HPS	HIGH PRESSURE SODIUM
HZ	HERTZ
IDS	INTRUSION DETECTION SYSTEM
kV	KILOVOLT
kW	KILOWATT
kVA	KILOVOLT-AMPERE
m	METERS
MLO	MAIN LUGS ONLY
MM	MULTIMODE
mm	MILLIMETERS
MH	MANHOLE
MCB	MAIN CIRCUIT BREAKER
MDP	MAIN DISTIBUTION PANEL
MTD	MOUNTED
NEC	NATIONAL ELECTRICAL CODE
PET	PROTECTED ENTRANCE TERMINAL
PH, ϕ	PHASE
P	POLE
RM	ROOM
SIRP	SECURE INTERNET PROTOCOL ROUTING
SM	SINGLEMODE
SN	SOLID NUETRAL
TBB	TELEPHONE BACKBOARD
TYP.	TYPICAL
UNO	UNLESS NOTED OTHERWISE
V	VOLT
W	WATT
WM	WIREMOLD
WP	WEATHERPROOF
W/	WITH
W/O	WITHOUT
XFMR,T	TRANSFORMER
N	NEUTRAL
EGC	EQUIPMENT GROUNDING CONDUCTOR
GEC	GROUNDING ELECTRODE CONDUCTOR
GES	GROUNDING ELECTRODE SYSTEM
UND	UNLESS NOTED OTHERWISE

UNLESS NOTED ELSEWHERE ON THE CONTRACT DOCUMENTS, THE FOLLOWING LIST REPRESENTS THE TYPICAL MOUNTING HEIGHTS FOR THE DEVICES SHOWN:

a. SWITCHES 1,220 mm (TO TOP)
b. RECEPTACLES 500 mm (TO BOTTOM)
c. COMPUTER RECEPTACLES 500 mm (TO BOTTOM)
d. WALL(W) TELE. AND/OR CALL SWITCHES 1,420 mm (TO TOP)
e. TELEPHONE OUTLETS (UNLABELED) 500 mm (TO BOTTOM)
f. TELEVISION OUTLETS 500 mm (TO BOTTOM)
g. FIRE ALARM PULL STATIONS 1,220 mm (TO TOP)
h. FIRE ALARM AUDIO/VISUAL UNITS 2,440 mm (TO TOP)
* (OR 150 mm BELOW CEILING, WHICHEVER IS LOWER.)
i. POWER PANELS 1,830 mm (TO TOP)
j. DISCONNECT SWITCHES 1,520 mm (TO TOP)
k. MOTOR STARTERS 1,520 mm (TO TOP)
l. EXIT LIGHTS 2,400 mm (TO BOTTOM)

IN MAINTENANCE BAYS, INCLUDING ANY ADJACENT AND COMMUNICATING AREAS, INSTALL ALL EQUIPMENT, ELECTRIC DEVICES, AND WIRING AT A MINIMUM OF 450mm (18 IN.) A.F.F. ANY ELECTRICAL EQUIPMENT OR WIRING INSTALLED BELOW THIS HEIGHT MUST CONFORM TO N.E.C. CLASS 1 DIVISION 2 WIRING METHODS. ANY WIRING BELOW THE FINISHED FLOOR MUST CONFORM TO N.E.C. CLASS 1, DIVISION 1 WIRING METHODS. PROVIDE SEAL-OFFS FOR ANY RACEWAY PENETRATING THE FLOOR IN THESE AREAS.

THE HEIGHTS INDICATED SHALL REQUIRE ONLY ONE BLOCK CUT FOR FLUSH MOUNTED DEVICES. MAINTAIN HEIGHT CONSISTENCY BETWEEN SURFACE AND FLUSH MOUNTED DEVICES.

GENERAL NOTES:

1. ALL FEEDER AND BRANCH CIRCUITS SHALL CONTAIN AN EQUIPMENT GROUNDING CONDUCTOR SIZED PER N.E.C.
2. ALL SERVICE ENTRANCE CONDUITS/DUCTS WITH CABLES SHALL BE SEALED AT BOTH ENDS WITH APPROPRIATE SEALER. EMPTY CONDUITS SHALL BE CLEANED AND CAPPED.
3. ALL PANELBOARD DIRECTORIES AND EQUIPMENT I.D'S SHALL BE TYPEWRITTEN AND COMPLETE IN DARI AND ENGLISH.
4. ALL CONDUIT PENETRATIONS THRU FIRE RATED WALLS OR CEILINGS SHALL BE SEALED/FIRESTOPPED.
5. ALL LIGHT SWITCHES SHALL BE RATED 20 AMPERES UNLESS OTHERWISE NOTED.
6. FOR ELECTRICAL INSTALLATION SEISMIC REQUIREMENTS, SEE SPECIFICATION SECTION 26 05 48.00 10, SEISMIC PROTECTION FOR ELECTRICAL EQUIPMENT.
7. PROVIDE FUSES IN FUSED DISCONNECT SWITCHES. SIZE AS REQUIRED BY MANUFACTURER OF EQUIPMENT THAT FUSE IS PROTECTING.

UNLESS OTHERWISE NOTED, LINEAR DIMENSIONS SHOWN ARE IN MILLIMETERS.

BID DOCUMENT SUBMITTAL

This project was made possible by the United States Agency for International Development and the generous support of the American People through USAID Global Architecture and Engineering IQC Contracts.

SYMB	DESCRIPTION	DATE	APR
	BID DOCUMENT SUBMITTAL	09/09/10	BRG
	100% DESIGN SUBMITTAL	07/06/10	BRG
	95% DESIGN SUBMITTAL	06/03/10	NJB

DESIGNED BY: MAL | DRAWN BY: EWK | CHK BY: BRG | DATE: 09/09/2010 | SUBMITTED BY: TETRA TECH | FILE NO.: LT0005-E-01

USAID FROM THE AMERICAN PEOPLE

AESP

USAID – OIEE
GHAZI BOYS HIGH SCHOOL
ELECTRICAL LEGEND, SYMBOLS, GENERAL NOTES AND ABBREVIATIONS

SHEET REFERENCE NUMBER:
LT0005 E-01

Z:\127-1298-10001\Work Orders\WO-LT\WO-LT-0005 GBHS Utility Design\CAD\Conceptual\Electrical\DWG\WOLT05_E-001.dwg 9/9/2010 8:58:13 AM Harris, Jessica

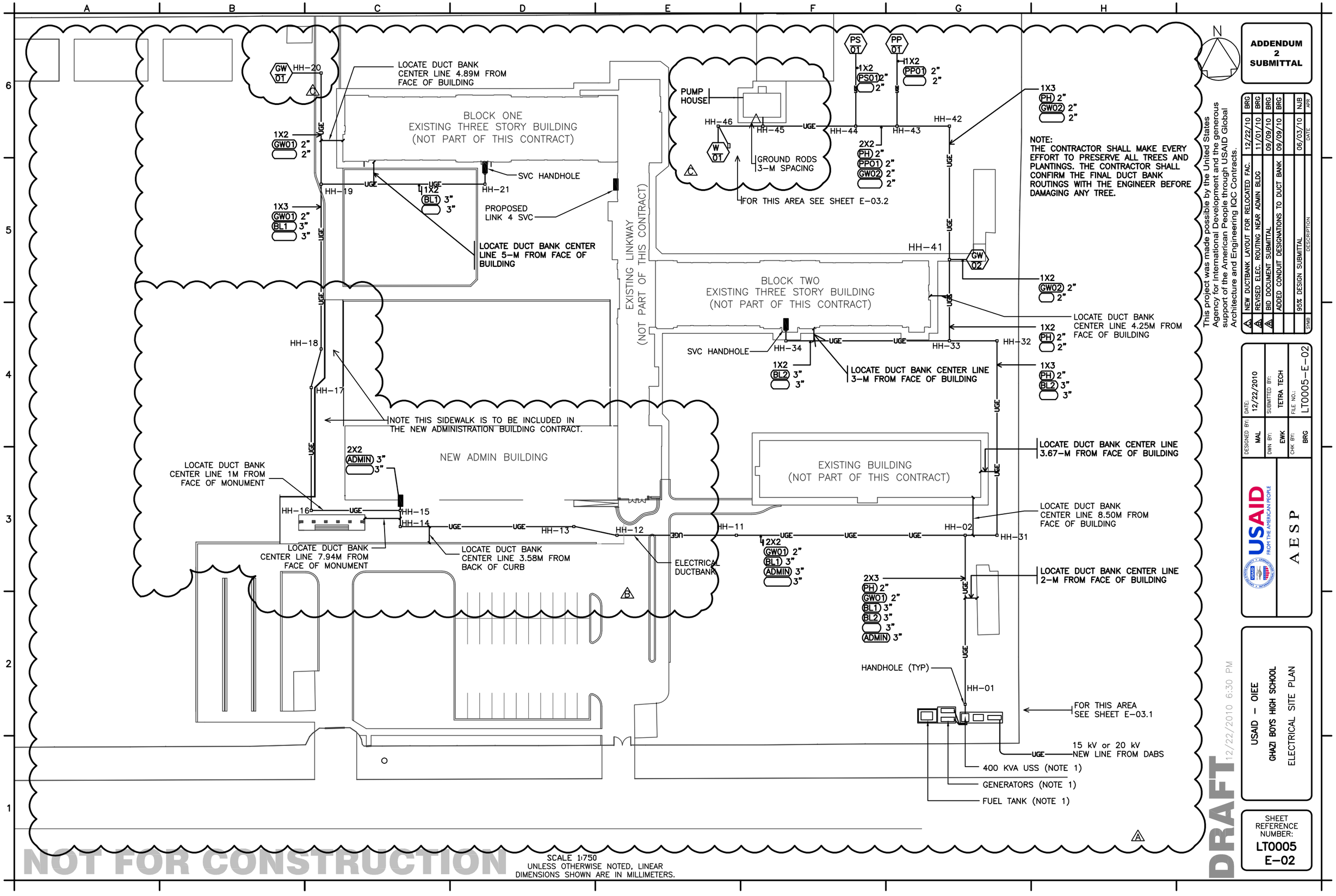

NOT FOR CONSTRUCTION

SCALE 1:750
UNLESS OTHERWISE NOTED, LINEAR DIMENSIONS SHOWN ARE IN MILLIMETERS.

DRAFT 12/22/2010 6:30 PM

This project was made possible by the United States Agency for International Development and the generous support of the American People through USAID Global Architecture and Engineering IQC Contracts.

ADDENDUM 2 SUBMITTAL

SYMB	DESCRIPTION	DATE	APR
C	NEW DUCTBANK LAYOUT FOR RELOCATED FAC.	12/22/10	BRG
B	REVISED ELEC. ROUTING NEAR ADMIN BLDG	11/01/10	BRG
A	BID DOCUMENT SUBMITTAL	09/09/10	BRG
	ADDED CONDUIT DESIGNATIONS TO DUCT BANK	09/09/10	BRG
	95% DESIGN SUBMITTAL	06/03/10	NJB

DESIGNED BY: MAL
DWN BY: EWK
CHK BY: BRG
DATE: 12/22/2010
SUBMITTED BY: TETRA TECH
FILE NO.: LT0005-E-02

USAID FROM THE AMERICAN PEOPLE

AESP

USAID – OIEE
GHAZI BOYS HIGH SCHOOL
ELECTRICAL SITE PLAN

SHEET REFERENCE NUMBER:
LT0005
E-02

P:\1298\Work Orders\WO-LT\WO-LT-0005 GBHS Utility Design\CAD\Conceptual\Electrical\DWG\WOLT05_E-002.dwg 12/22/2010 6:30:15 PM Safai, Ahmad Shekib

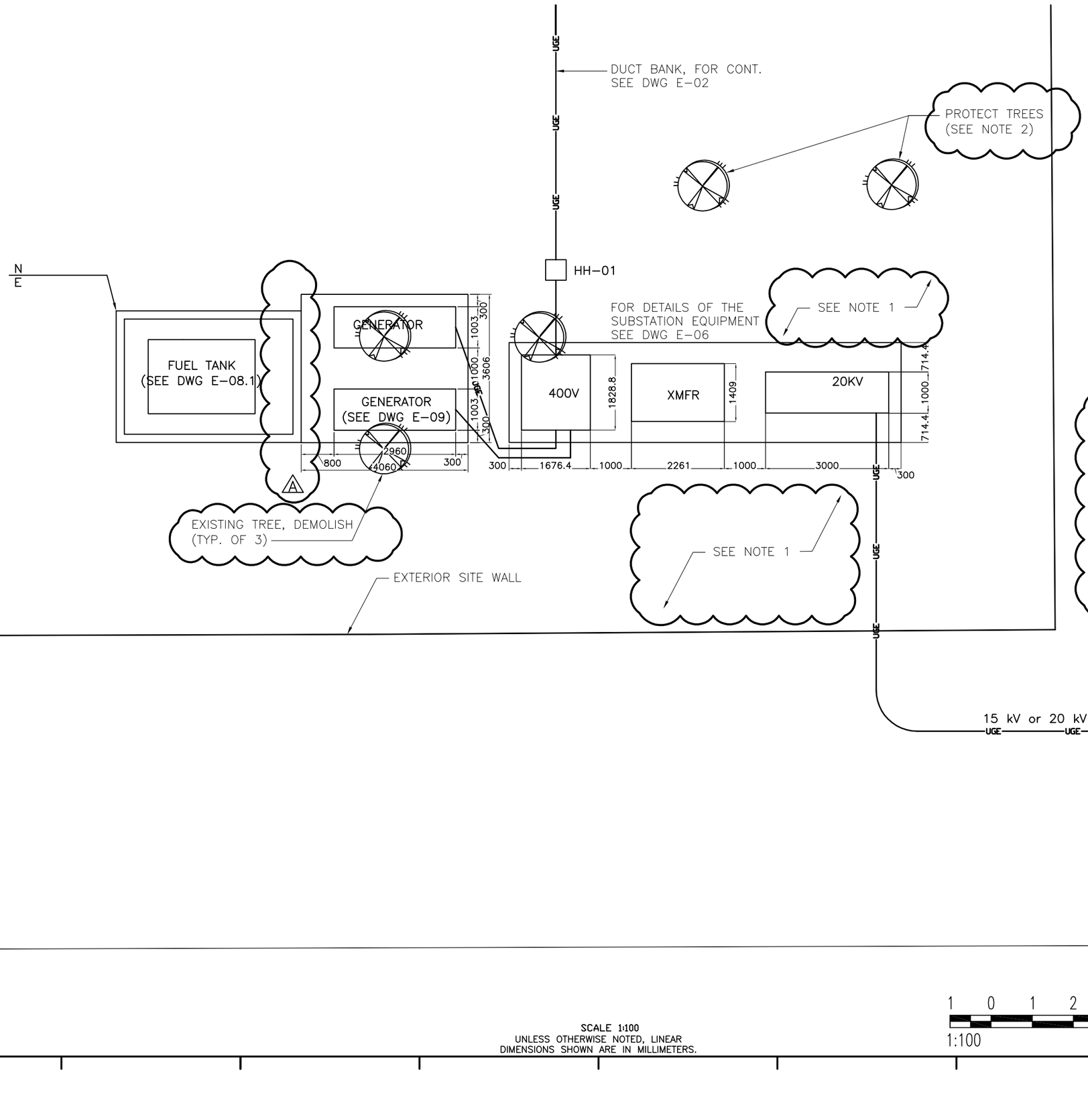

NOTES:

1. AN OLD FOUNDATION IN THIS AREA (NOT SHOWN) IS TO BE DEMOLISHED. SEE DWG C-02.2 SITE DEMOLITION PLAN.
2. THE CONTRACTOR SHALL MAKE EVERY EFFORT TO PRESERVE ALL TREES AND PLANTINGS. THE CONTRACTOR SHALL CONFIRM THE FINAL DUCT BANK ROUTINGS WITH THE ENGINEER BEFORE DAMAGING ANY TREE.

ADDENDUM 2 SUBMITTAL

SYMB	DESCRIPTION	DATE	
4	EXTENDED GENERATOR AND FUEL TANK PADS	12/22/10	BRG
	BID DOCUMENT SUBMITTAL	09/09/10	BRG
	CLARIFIED DEMOLITION AND TREE PROTECTION	09/09/10	BRG
	100% DESIGN SUBMITTAL	07/06/10	BRG
	95% DESIGN SUBMITTAL	06/03/10	NJB

This project was made possible by the United States Agency for International Development and the generous support of the American People through USAID Global Architecture and Engineering IQC Contracts.

DESIGNED BY: MAL | DATE: 12/22/2010
DWN BY: EWK | SUBMITTED BY: TETRA TECH | FILE NO.: LT0005-E-03
CHK BY: BRG

USAID FROM THE AMERICAN PEOPLE

AESP

USAID – OIEE
GHAZI BOYS HIGH SCHOOL
ENLARGED ELECTRICAL SITE PLAN
1 OF 2

SHEET REFERENCE NUMBER:
LT0005 E-03.1

SCALE 1:100
UNLESS OTHERWISE NOTED, LINEAR DIMENSIONS SHOWN ARE IN MILLIMETERS.

1 0 1 2 3 4 5 6 7 8 9
1:100

P:\1298\Work Orders\WO-LT\WO-LT-0005 GBHS Utility Design\CAD\Conceptual\Electrical\DWG\WOLT05_E-003.1.dwg 12/21/2010 4:02:57 PM Harris, Jessica

P:\1298\Work Orders\WO-LT\WO-LT-0005 GBHS Utility Design\CAD\Conceptual\Electrical\DWG\WOLT05_E-003.2.dwg 12/22/2010 6:29:43 PM Safai, Ahmad Shekib

GRAVEL MAINTENANCE LOT

PUMP HOUSE

CENTER THE DUCTBANK BETWEEN THE TWO STRUCTURES

FOR CONT. SEE DWG E-10.1

PROVIDE AND INSTALL 8x1.5 FOR CLASS 1 CONTROL CIRCUITS BETWEEN W-01 AND THE POTABLE WATER TANK, SEE C-09.1 FOR TERMINATIONS

PROVIDE AND INSTALL 2x1.5 FOR CLASS 1 CONTROL CIRCUIT BETWEEN HH-46 AND THE POTABLE WATER TANK, SEE DWG C-10 FOR TERMINATIONS

HH-46

HH-45

1x3
W01 2"
CONTROL 2"
2"

1x2
CONTROL 2"
2"

2x3
PH 2"
PS01 2"
PP01 2"
GW02 2"
W01 2"
2"

2x3
PH 2"
PS01 2"
PP01 2"
GW02 2"
2"
2"

UGE

EQ

EQ

TURN UP

POTABLE WATER TANK

W WELL 01

NOTES:
ALL CLASS 1 CONTROL CIRCUITS WIRES SHALL SHARE A SINGLE DUCT WHEN RUN TOGETHER.

SCALE 1:100
UNLESS OTHERWISE NOTED, LINEAR DIMENSIONS SHOWN ARE IN MILLIMETERS.

1 0 1 2 3 4 5 6 7 8 9
1:100

ADDENDUM 2 SUBMITTAL

	DESCRIPTION	DATE	
4	NEW DUCTBANK LAYOUT FOR RELOCATED FAC.	12/22/10	BRG
3	BID DOCUMENT SUBMITTAL	09/09/10	BRG
2	ADDED NEW SHEET	09/09/10	BRG
1	95% DESIGN SUBMITTAL	06/03/10	NJB
SYMB			APR

This project was made possible by the United States Agency for International Development and the generous support of the American People through USAID Global Architecture and Engineering IQC Contracts.

DESIGNED BY: MAL
DWN BY: EWK
CHK BY: BRG
DATE: 12/22/2010
SUBMITTED BY: TETRA TECH
FILE NO.: LT0005-E-03

USAID FROM THE AMERICAN PEOPLE

AESP

USAID – OIEE
GHAZI BOYS HIGH SCHOOL
ENLARGED ELECTRICAL SITE PLAN
2 OF 2

SHEET REFERENCE NUMBER:
LT0005 E-03.2

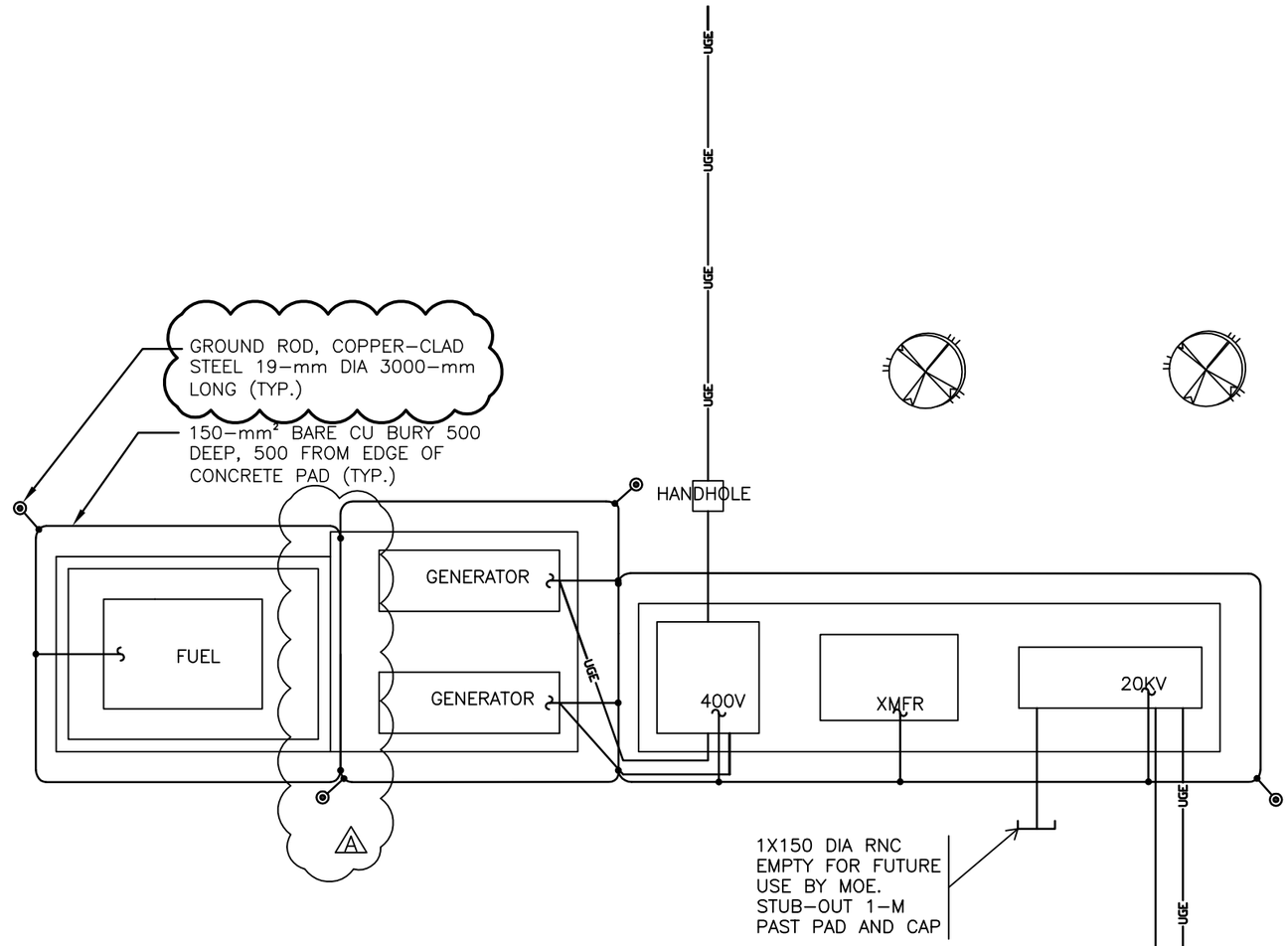

SCALE 1:100

UNLESS OTHERWISE NOTED, LINEAR DIMENSIONS SHOWN ARE IN MILLIMETERS.

1 0 1 2 3 4 5 6 7 8 9

1:100

ADDENDUM 2 SUBMITTAL

SYMB	DESCRIPTION	DATE	APR
A	EXTENDED GENERATOR AND FUEL TANK PADS	12/22/10	BRG
	BID DOCUMENT SUBMITTAL	09/09/10	BRG
	100% DESIGN SUBMITTAL	07/06/10	BRG
	95% DESIGN SUBMITTAL	06/03/10	NJB

This project was made possible by the United States Agency for International Development and the generous support of the American People through USAID Global Architecture and Engineering IQC Contracts.

DESIGNED BY: MAL | DATE: 12/22/2010
DWN BY: EWK | SUBMITTED BY: TETRA TECH
CHK BY: BRG | FILE NO.: LT0005-E-04

USAID FROM THE AMERICAN PEOPLE

AESP

USAID - OIEE
GHAZI BOYS HIGH SCHOOL
ENLARGED
ELECTRICAL GROUNDING PLAN

SHEET REFERENCE NUMBER:
LT0005 E-04

P:\1298\Work Orders\WO-LT\WO-LT-0005 GBHS Utility Design\CAD\Conceptual\Electrical\DWG\WOLT05_E-004.dwg 12/21/2010 4:18:14 PM Harris, Jessica

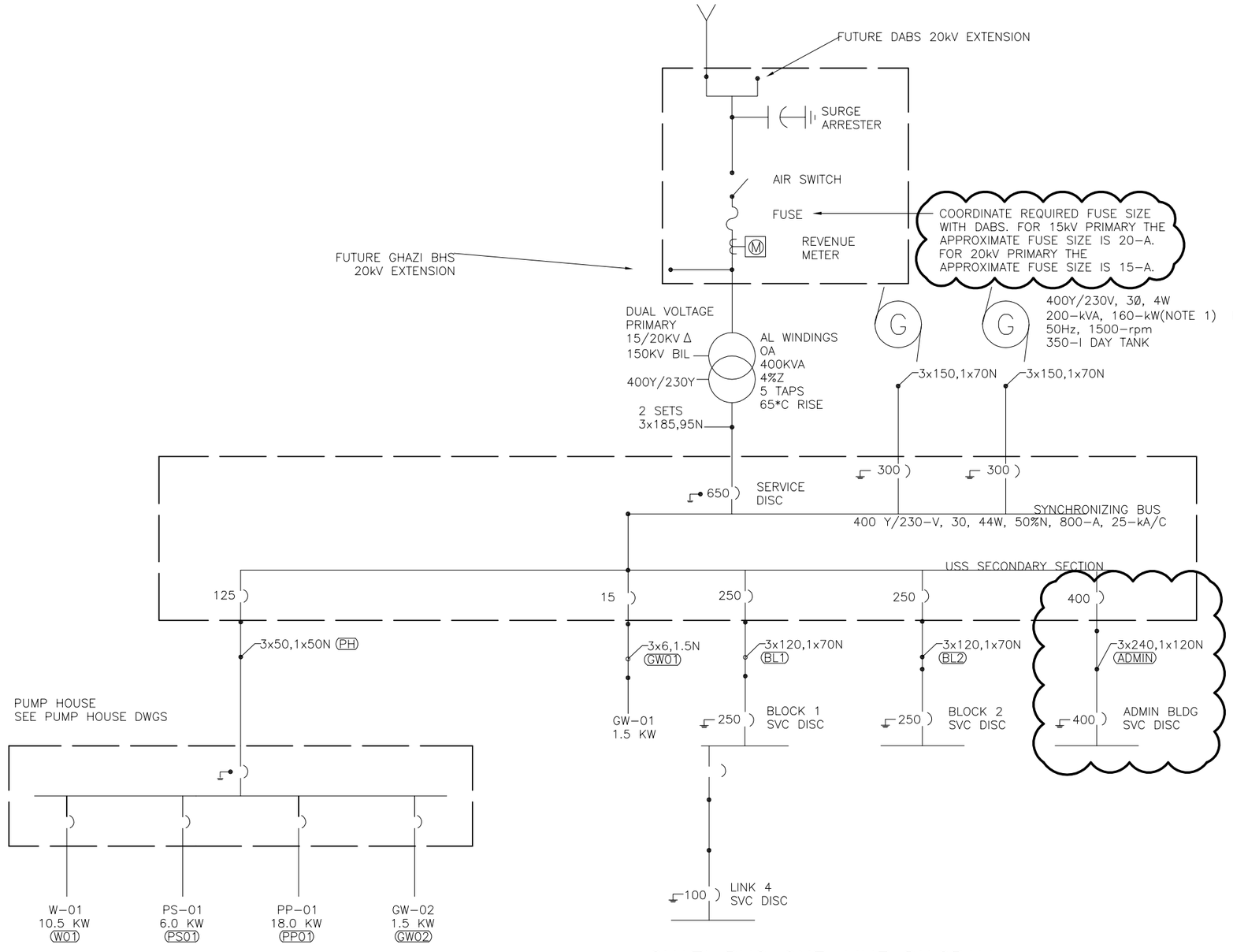

GHAZI BHS ONE-LINE DIAGRAM
NTS

NOTES

1. GENERATORS ARE RATED AT SEA LEVEL INSTALLATION IS AT 1,800-M. DO NOT FURTHER DERATE.
2. CABLE SIZES ARE IN mm^2 CU, 70°C INSULATION.

UNLESS OTHERWISE NOTED, LINEAR DIMENSIONS SHOWN ARE IN MILLIMETERS.

BID DOCUMENT SUBMITTAL

SYMB	DESCRIPTION	DATE	APR
	BID DOCUMENT SUBMITTAL	09/09/10	BRG
	MISCELLANEOUS REVISIONS	09/09/10	BRG
	100% DESIGN SUBMITTAL	07/06/10	BRG
	95% DESIGN SUBMITTAL	06/03/10	NJB

This project was made possible by the United States Agency for International Development and the generous support of the American People through USAID Global Architecture and Engineering IQC Contracts.

DESIGNED BY: MAL
DRN BY: EWK
CHK BY: BRG
DATE: 09/09/2010
SUBMITTED BY: TETRA TECH
FILE NO: LT0005-E-05

USAID FROM THE AMERICAN PEOPLE

AESP

USAID - OIEE
GHAZI BOYS HIGH SCHOOL
ELECTRICAL ONE-LINE DIAGRAM

SHEET REFERENCE NUMBER:
LT0005 E-05

Z:\127-1298-10001\Work Orders\WO-LT\WO-LT-0005 GBHS Utility Design\CAD\Conceptual\Electrical\DWG\WOLT05_E-005.dwg 9/9/2010 9:25:00 AM Harris, Jessica

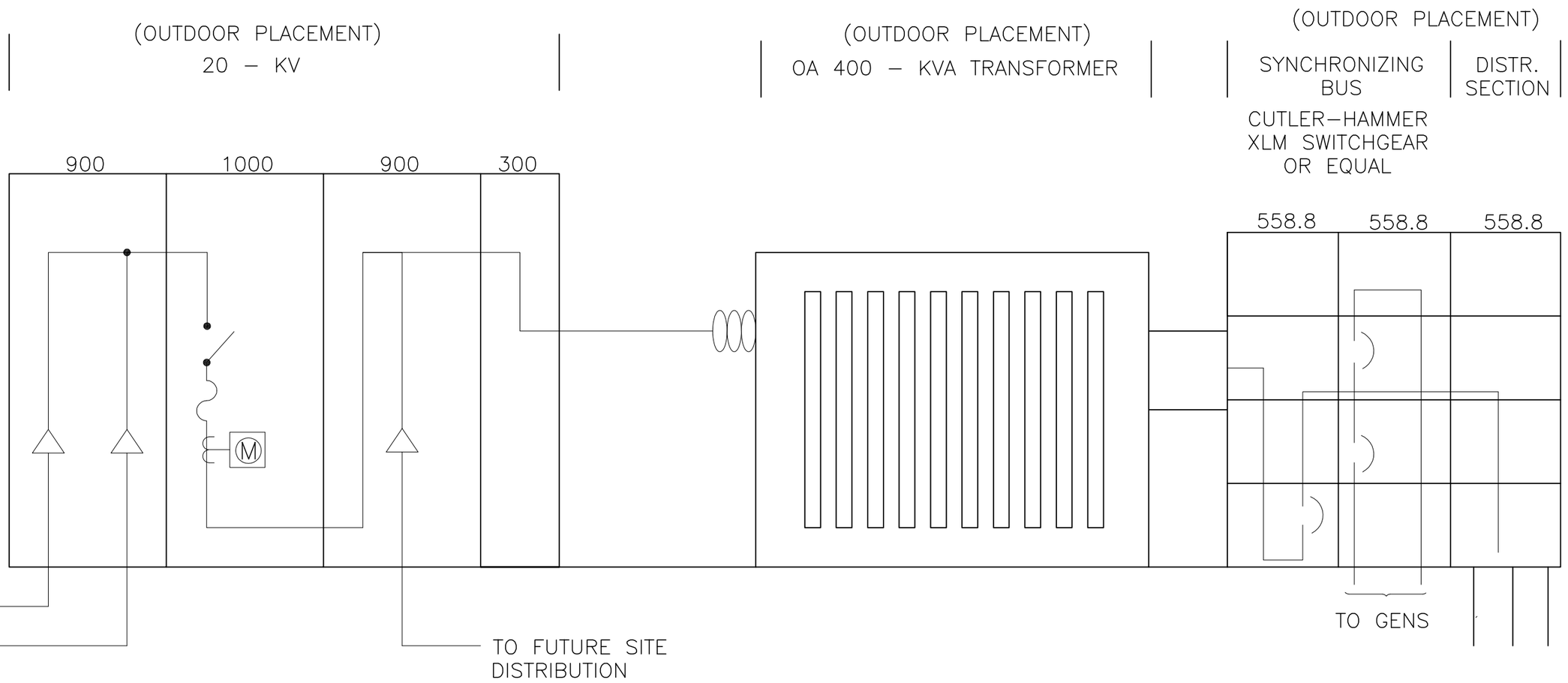

GHAZI BHS OUTDOOR SECONDARY UNIT SUBSTATION ELEVATION

N.T.S

UNLESS OTHERWISE NOTED, LINEAR DIMENSIONS SHOWN ARE IN MILLIMETERS.

2514.6

BID DOCUMENT SUBMITTAL

SYMB	DESCRIPTION	DATE	APR
	BID DOCUMENT SUBMITTAL	09/09/10	BRG
	100% DESIGN SUBMITTAL	07/06/10	BRG
	95% DESIGN SUBMITTAL	06/03/10	NJB

This project was made possible by the United States Agency for International Development and the generous support of the American People through USAID Global Architecture and Engineering IQC Contracts.

DESIGNED BY: MAL
DWN BY: EWK
CHK BY: BRG
DATE: 09/09/2010
SUBMITTED BY: TETRA TECH
FILE NO.: LT0005-E-06

USAID FROM THE AMERICAN PEOPLE

AESP

USAID – OIEE
GHAZI BOYS HIGH SCHOOL
ELECTRICAL UNIT SUBSTATION ELEVATION

SHEET REFERENCE NUMBER:
LT0005 E–06

Z:\127-1298-10001\Work Orders\WO-LT\WO-LT-0005 GBHS Utility Design\CAD\Conceptual\Electrical\DWG\WOLT05_E-006.dwg 9/9/2010 9:26:13 AM Harris, Jessica

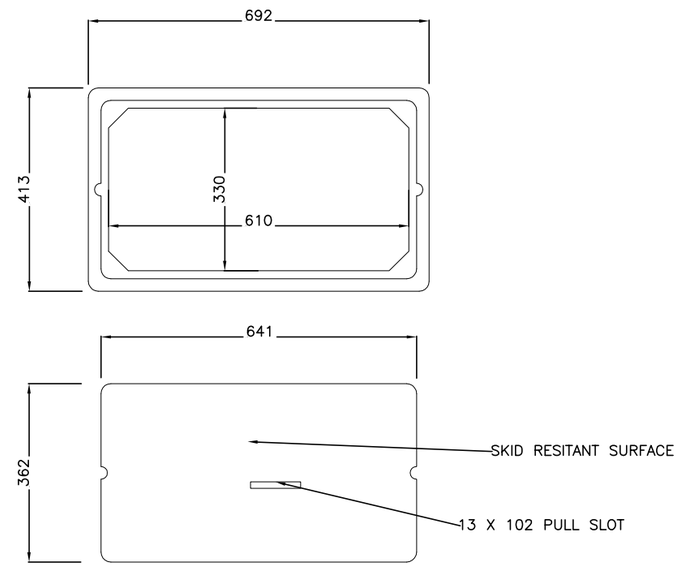

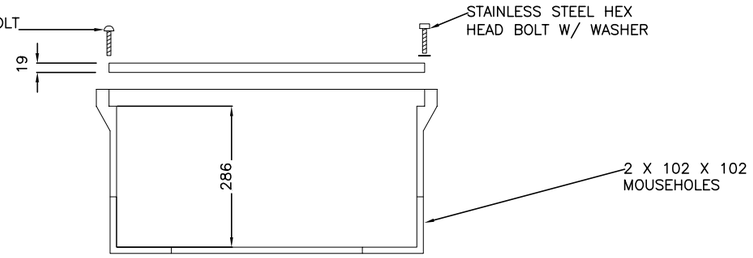

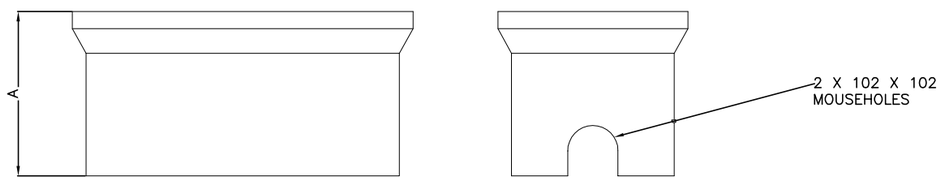

QUAZITE OR EQUAL STYLE STACKABLE BOX
N.T.S.

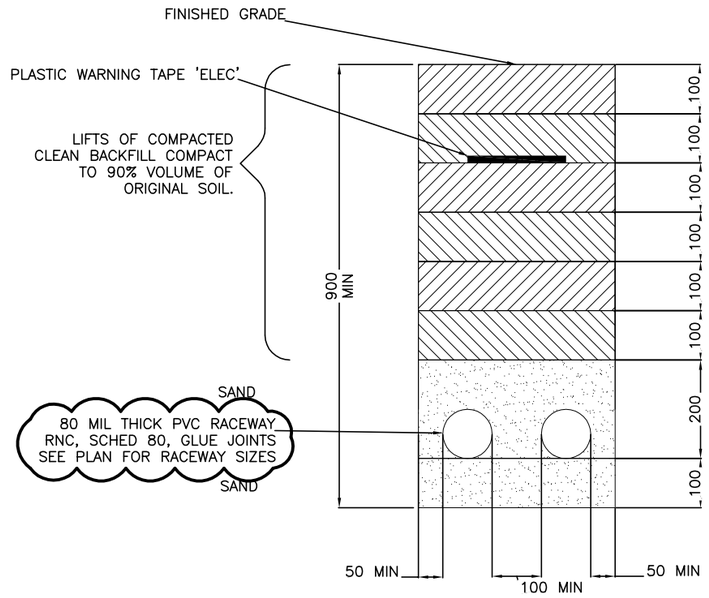

TYPICAL DUCTBANK SECTION
N.T.S.

COVERS

DESCRIPTION	WEIGHT #
W/2 BOLTS	10.4 KG

BOXES

DESCRIPTION	WEIGHT #	DIMENSION A
OPEN BOTTOM	22.7 KG	305 MM
OPEN BOTTOM W/2 MOUSE HOLES	22.7 KG	305 MM
SOLID BOTTOM	27.2 KG	318 MM

UNLESS OTHERWISE NOTED, LINEAR DIMENSIONS SHOWN ARE IN MILLIMETERS.

BID DOCUMENT SUBMITTAL

This project was made possible by the United States Agency for International Development and the generous support of the American People through USAID Global Architecture and Engineering IQC Contracts.

SYMB	DESCRIPTION	DATE	APR
	BID DOCUMENT SUBMITTAL	09/09/10	BRG
	100% DESIGN SUBMITTAL	07/06/10	BRG
	95% DESIGN SUBMITTAL	06/03/10	NJB

DESIGNED BY: MAL | DRN BY: EWK | CHK BY: GRB | DATE: 09/09/2010 | SUBMITTED BY: TETRA TECH | FILE NO: LT0005-E-07

USAID FROM THE AMERICAN PEOPLE

A E S P

USAID – OIEE
GHAZI BOYS HIGH SCHOOL
ELECTRICAL DETAILS
UNDERGROUND STRUCTURES

SHEET REFERENCE NUMBER:
LT0005 E–07

Z:\127-1298-10001\Work Orders\WO-LT\WO-LT-0005 GBHS Utility Design\CAD\Conceptual\Electrical\DWG\WOLT05_E-007.dwg 9/9/2010 9:29:12 AM Harris, Jessica

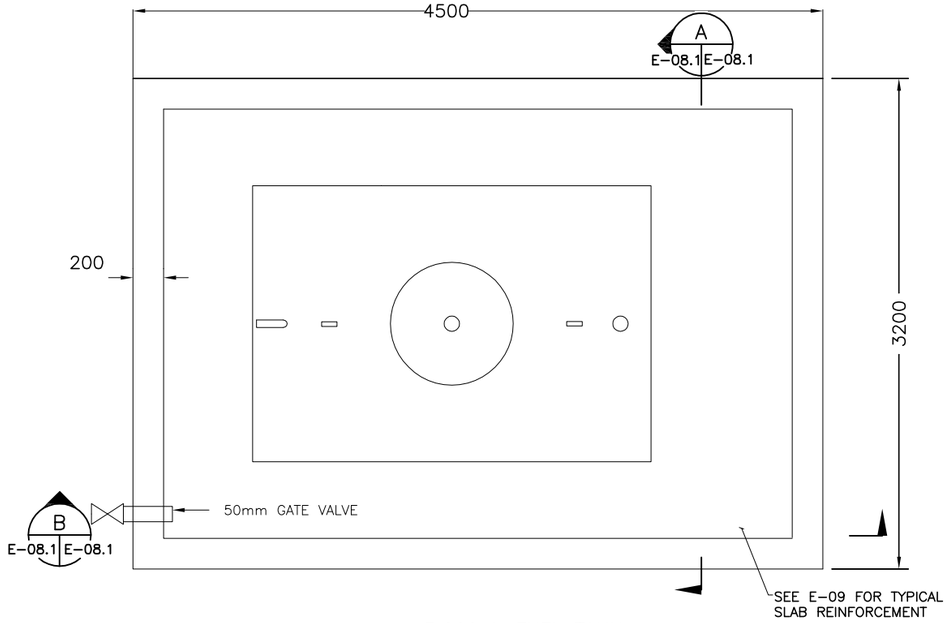

5,000 L FUEL TANK
1:40

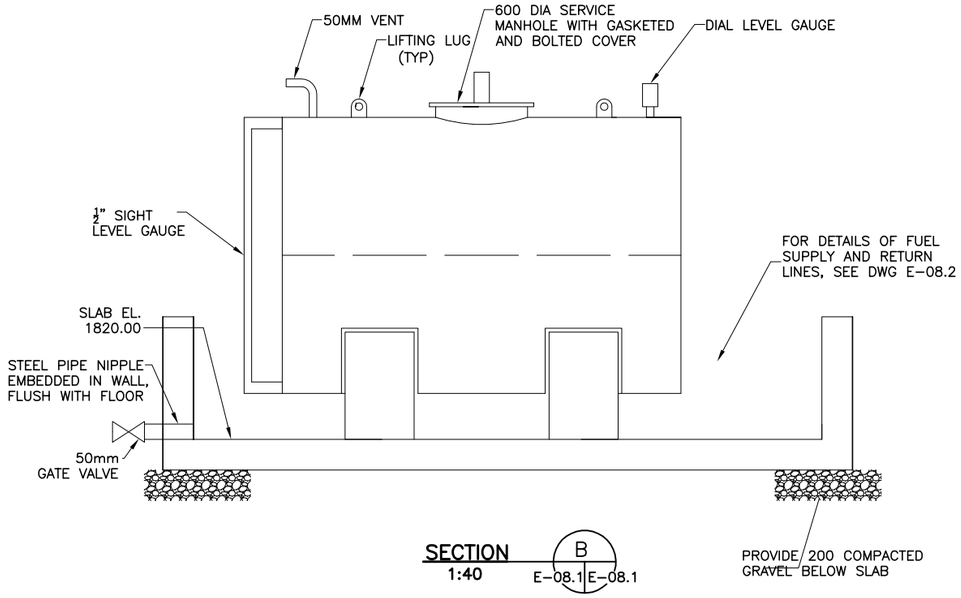

SECTION
1:40
B
E-08.1 E-08.1

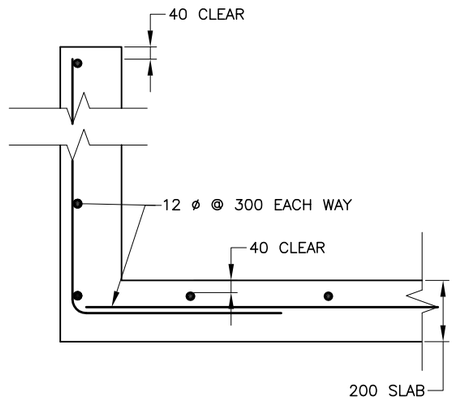

CONTAINMENT CORNER REINFORCEMENT DETAIL
N.T.S

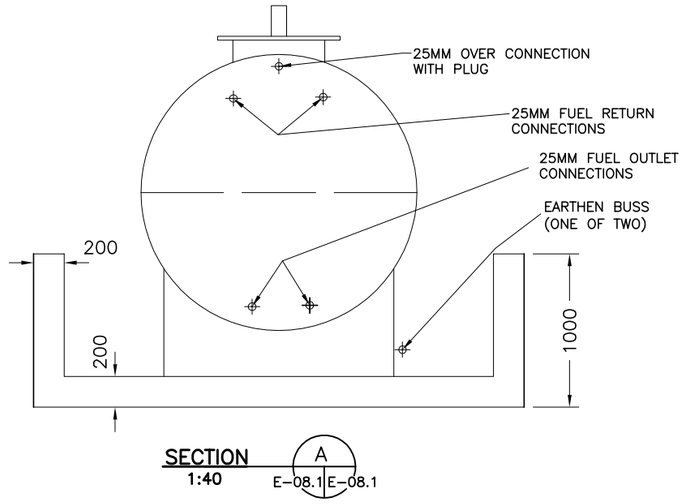

SECTION
1:40
A
E-08.1 E-08.1

1 .50 0 1
1:40

UNLESS OTHERWISE NOTED, LINEAR DIMENSIONS SHOWN ARE IN MILLIMETERS.

ADDENDUM 2 SUBMITTAL

This project was made possible by the United States Agency for International Development and the generous support of the American People through USAID Global Architecture and Engineering IQC Contracts.

SYMB	DESCRIPTION	DATE	APR
A	LENGTHENED FUEL TANK ENCLOSURE	12/22/10	BRG
	BID DOCUMENT SUBMITTAL	09/09/10	BRG
	100% DESIGN SUBMITTAL	07/06/10	BRG
	95% DESIGN SUBMITTAL	06/03/10	NJB

DESIGNED BY: MAL
DATE: 12/22/2010
DWN BY: EWK
SUBMITTED BY: TETRA TECH
CHK BY: BRG
FILE NO.: LT0005-E-08.1

USAID FROM THE AMERICAN PEOPLE

AESP

USAID – OIEE
GHAZI BOYS HIGH SCHOOL
ELECTRICAL DETAILS
FUEL OIL TANK

SHEET REFERENCE NUMBER:
LT0005
E-08.1

P:\1298\Work Orders\WO-LT\WO-LT-0005 GBHS Utility Design\CAD\Conceptual\Electrical\DWG\WOLT05_E-008.1, E-009.dwg 12/21/2010 4:20:42 PM Harris, Jessica

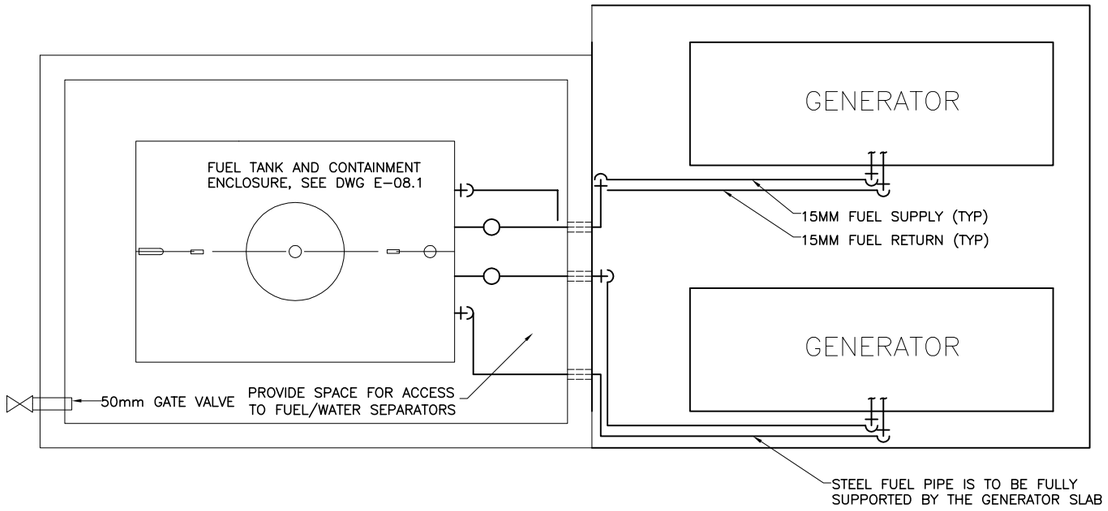

FUEL SYSTEM PLAN
1:50

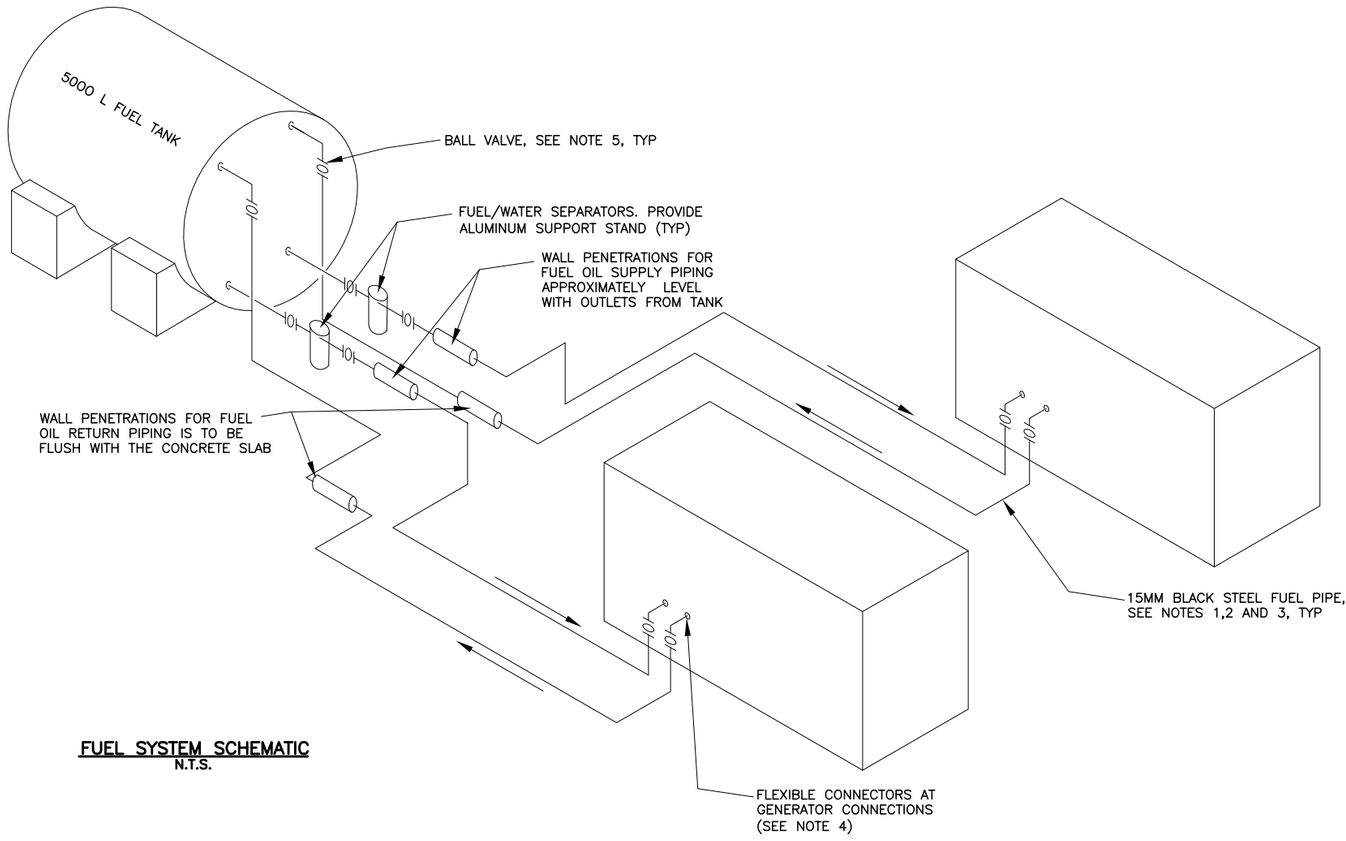

FUEL SYSTEM SCHEMATIC
N.T.S.

NOTES:

1. FUEL PIPE IS TO BE BLACK STEEL, SCHEDULE 40, TYPE E OR S, GRADE B (ASTM A53). ALL JOINTS TO BE BUTT WELDED.
2. WROUGHT-STEEL WELDING FITTINGS PER ASTM A243
3. MALLEABLE-IRON THREADED FITTINGS PER ASME B16.3, CLASS 150.
4. FLEXIBLE CONNECTORS ARE TO BE USED AT THE GENERATOR CONNECTIONS, THE CONNECTORS ARE TO BE IN ACCORDANCE WITH UL 567.
5. MANUAL FUEL-OIL SHUT OFF VALVES SHALL COMPLY WITH UL 842. PRESSURE RATING 860 KPA. PROVIDE LOCKING FEATURE ON ALL VALVES.

UNLESS OTHERWISE NOTED, LINEAR DIMENSIONS SHOWN ARE IN MILLIMETERS.

This project was made possible by the United States Agency for International Development and the generous support of the American People through USAID Global Architecture and Engineering IQC Contracts.

ADDENDUM 2 SUBMITTAL

SYMB	DESCRIPTION	DATE	APR
2	NEW SHEET-FUEL SYSTEM	12/22/10	BRG

DESIGNED BY: MAL
DRN BY: EWK
CHK BY: BRG
DATE: 12/22/2010
SUBMITTED BY: TETRA TECH
FILE NO: LT0005-E-08.2

USAID FROM THE AMERICAN PEOPLE

AESP

USAID - OIEE
GHAZI BOYS HIGH SCHOOL
ELECTRICAL DETAILS
FUEL SYSTEM

SHEET REFERENCE NUMBER:
LT0005 E-08.2

P:\1298\Work Orders\WO-LT\WO-LT-0005 GBHS Utility Design\CAD\Conceptual\Electrical\DWG\WOLT05_E-008.2.dwg 12/21/2010 4:22:15 PM Harris, Jessica

ELECTRICAL EQUIPMENT PADS (SEE NOTE 1)

DESCRIPTION	EQUIPMENT	DIMENSION A	DIMENSION B	DIMENSION C
GENERATOR PAD	2x CATERPILLAR OLYMPIAN GEH220–2 OR EQUAL CAEU ENCLOSURE OR EQUAL	3606 MM	3560 MM	200 MM
XFMR PAD	1x OA– 400 KVA TRANSFORMER 1x CUTLER–HAMMER XLM SWITCHGEAR OR EQUAL	2428.8 MM	9537.4 MM	200 MM

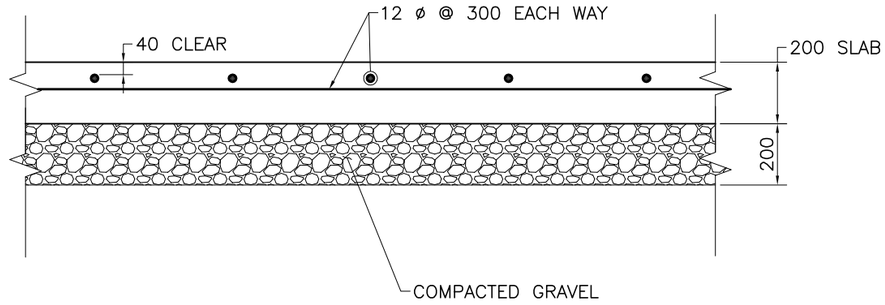

SLAB ON GRADE
TYPICAL REINFORCEMENT DETAIL
N.T.S

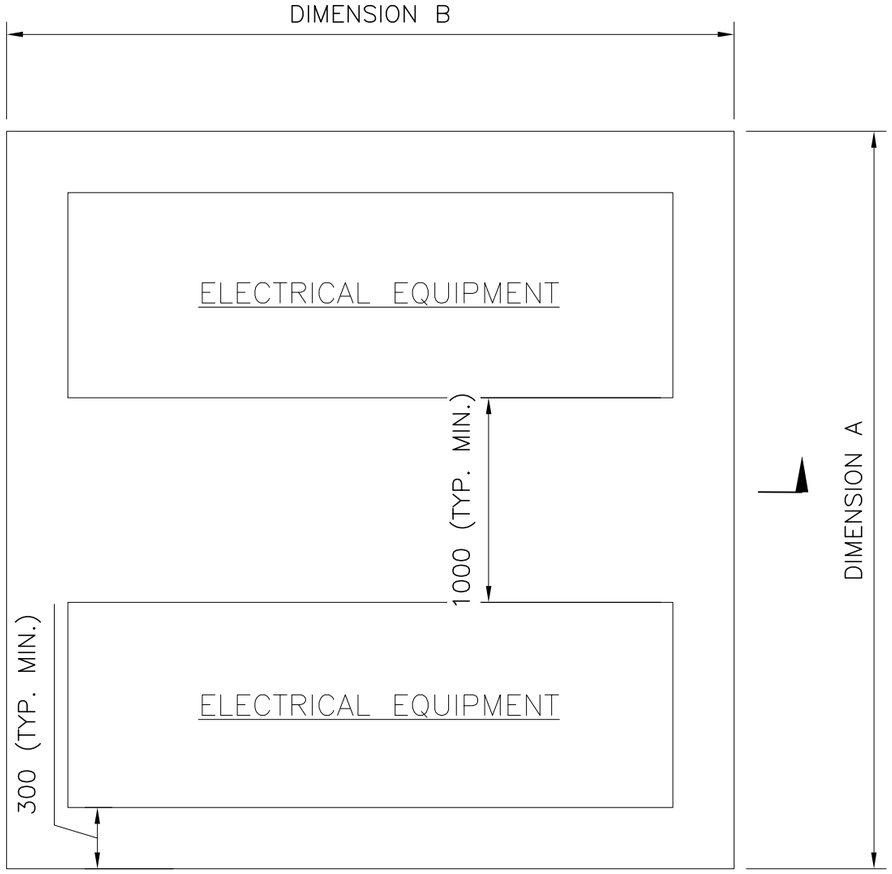

GENERATOR/GENERATOR SLAB
N.T.S.

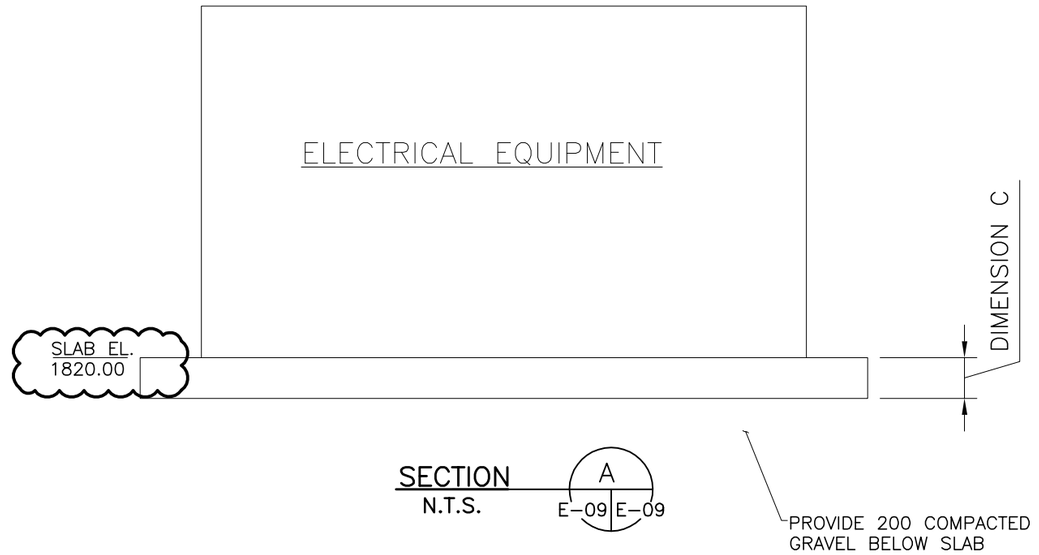

NOTES:

1. CONTRACTOR TO VERIFY EQUIPMENT SIZE IN FIELD AND ADJUST PAD SIZE ACCORDINGLY.
2. ELECTRICAL EQUIPMENT IS NOT TO BE PLACED WITHIN 300mm MIN FROM EDGE OF PAD.
3. ELECTRICAL EQUIPMENT IS NOT TO BE PLACED WITHIN 1000mm OF OTHER EQUIPMENT.
4. SEE SHEET E–03.1 FOR ELECTRICAL EQUIPMENT PAD ORIENTATION.
5. STRUCTURAL CONCRETE SHALL BE NORMAL WEIGHT CONCRETE TYPE V CEMENT HAVING A MINIMUM STRENGTH OF 281 kg/cm² AT 28 DAYS.

UNLESS OTHERWISE NOTED, LINEAR DIMENSIONS SHOWN ARE IN MILLIMETERS.

BID DOCUMENT SUBMITTAL

SYMB	DESCRIPTION	DATE	APR
	BID DOCUMENT SUBMITTAL	09/09/10	BRG
	100% DESIGN SUBMITTAL	07/06/10	BRG
	95% DESIGN SUBMITTAL	06/03/10	NJB

This project was made possible by the United States Agency for International Development and the generous support of the American People through USAID Global Architecture and Engineering IQC Contracts.

DESIGNED BY: MAL/EWK
DATE: 09/09/2010
DWN BY: EWK
SUBMITTED BY: TETRA TECH
CHK BY: BRG
FILE NO.: LT0005–E–09

USAID FROM THE AMERICAN PEOPLE

AESP

USAID – OIEE
GHAZI BOYS HIGH SCHOOL
ELECTRICAL DETAILS
TRANSFORMER AND GENERATOR

SHEET REFERENCE NUMBER:
LT0005
E–09

Z:\127–1298–10001\Work Orders\WO–LT\WO–LT–0005 GBHS Utility Design\CAD\Conceptual\Electrical\DWG\WOLT05_E–008, E–009.dwg 9/9/2010 9:43:16 AM Harris, Jessica

LOCATION: PUMP ROOM

PANELBOARD PH1 — WALL MOUNTED — 18K AIC SYM. A.I.C. MIN.
– AMP. MAIN LUGS (OR) — 225 AMP. MAIN BREAKER W/ — 125 AMP. TRIP
CIRCUIT BREAKER TYPE 400Y/230 VOLTS 3 PHASE 4 WIRE 50 HZ 225 AMP. BUS

CKT. NO.	NO. POLES	TRIP AMPS	WIRE MM²	GND MM²	CONDUIT MM	LOAD SERVED	LOAD–V.A. A0	LOAD–V.A. B0	LOAD–V.A. C0	LOAD–V.A. A0	LOAD–V.A. B0	LOAD–V.A. C0	LOAD SERVED	CONDUIT MM	GND MM²	WIRE MM²	TRIP AMPS	NO. POLES	CKT. NO.
1	1	16	4	4	20	RECEPTS: PUMP ROOM	1200			140			EMERGENCY EXIT/LIGHTING	20	4	4	16	1	2
3	1	16	4	4	20	RECEPTS: STORAGE,DISINF. RMS		1000			512		LGTS: PUMP RM,STOR,DISINF RM	20	4	4	16	1	4
5	1	40	10	10	20	UH–1			7500			–	SPARE	–	–	–	16	1	6
7	1	16	4	4	20	EF–1	170			5000			UH–2	20	6	6	30	1	8
9	1	16	4	4	20	EF–3		75			75		EF–2	20	4	4	16	–	10
11	3	40	4	4	–	W–01			3500			–	SPARE	–	–	–	16	1	12
13							3500			300			PS–01	–	4	4	25	3	14
15								3500			300								16
17	3	63	10	10	–	PP–01			6000			300							18
19							6000			–			SPARE	–	–	–	16	3	20
21								6000			–								22
23	1	16	–	–	–	SPARE			–										24
25	3	63	10	10	–	PH–01	5333			–			SPARE	–	4	4	16	3	26
27								5333			–								28
29									5333			–							30
31	1	16	–	–	–	SPARE	–			500			GW–02		4	4	16	3	32
33	1	16	–	–	–	SPARE		–			500								34
35	1	16	–	–	–	SPARE			–			500							36
37	3	16	–	–	–	SPARE	–			–			SPARE	–	–	–	16	1	38
39								–			–		SPARE	–	–	–	16	1	40
41									–			–	SPARE	–	–	–	16	1	42
						*=GFI **=SHUNT TRIP	16,203	15,908	22,333	6,440	1,887	1,300							

–PROVIDE BREAKER AS REQUIRED BY MANUFACTURER FOR TVSS

TOTAL CONN. LOAD PER PHASE (KVA): A0 22.6 B0 17.8 C0 23.6

TOTAL CONN. LOAD 64.0 KVA. – % DEMAND = ESTIMATED DEMAND LOAD – KVA SUPPLIED FROM: SERVICE

PANEL SCHEDULE
N.T.S.

PLAN LEGEND (LIGHTING)

FOR LIGHT FIXTURE SYMBOLS REFER TO LIGHT FIXTURE SCHEDULE ON THIS DRAWING

REFER TO DRAWING E–01 FOR ADDITIONAL SYMBOLS AND ABBREVIATIONS

- XX — LIGHT SWITCH, XX CIRCUIT NUMBER
- PH1–2 — HOMERUN TO PANELBOARD. SYMBOL SHOWN INDICATES CIRCUIT NO. 2 PANEL PH1. REFER TO PANELBOARD SCHEDULE FOR FURTHER INFORMATION.

PLAN LEGEND (POWER)

- PANELBOARD
- XXX–## — MOTOR, XXX CIRCUIT NUMBER
- XX — WALL MOUNTED SINGLE ELECTRICAL SOCKET 2P+T 13A, 50 Hz. XX CIRCUIT NUMBER
- RACEWAY TURNED DOWN

ONE–LINE AND CONTROL SCHEMATIC LEGEND

- ##A — CIRCUIT BREAKER

LEGEND
N.T.S.

ABBREVIATIONS

EC	CONTRACTOR RESPONSIBLE FOR ELECTRICAL WORK
HC	CONTRACTOR RESPONSIBLE FOR HVAC WORK
HVAC	HEATING, VENTILATION, AND AIR CONDITIONING
MFR	MANUFACTURER
N	NEUTRAL
PH	PUMP HOUSE
T	THERMOSTAT
UH	UNIT HEATER

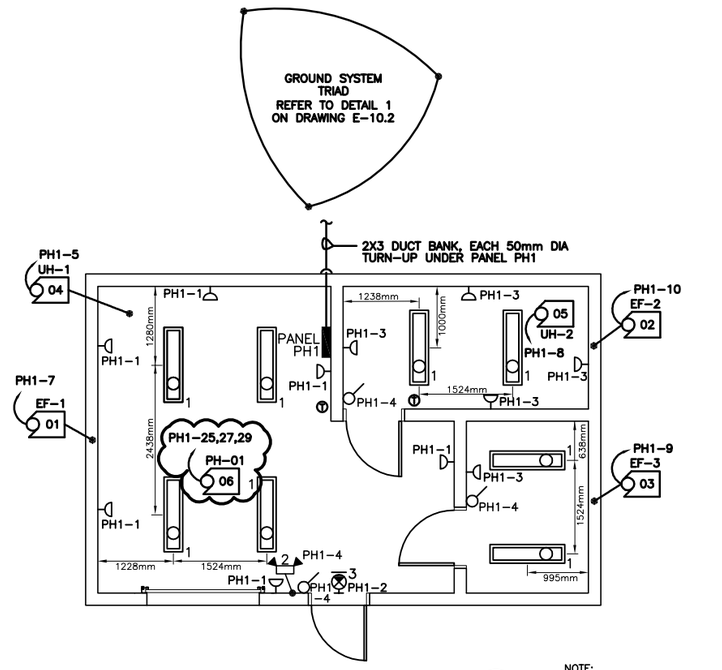

BOOSTER PUMP HOUSE
SCALE = 1:50

1 — E–10.1 | E–10.1

NOTE: PROVIDE GFI PROTECTION FOR ALL RECEPTACLES. CONNECT TYPE 2 BATTERY PACK TO UNSWITCHED SIDE OF THE LIGHTING CIRCUIT FEEDING THE ROOM SERVED.

LIGHT FIXTURE SCHEDULE

ITEM	SYMBOL	ITEM	LAMPS NO.	LAMPS WATTAGE	LAMPS TYPE	MANUFACTURERS (OR EQUAL) * NAME	MANUFACTURERS (OR EQUAL) * MODEL OR SERIES
1		COMMERCIAL 206mm X 1270mm ENCLOSED AND GASKETED INDUSTRIAL WITH FIBERGLASS REINFORCED POLYESTER HOUSING, SURFACE MOUNTING, 2 LAMP	2	32 (64)	F32T8	LITHONIA	DMW232MVOLT–GEB10IS SURFACE MOUNT, 230/50 Hz
2		BATTERY PACK EMERGENCY LIGHT FOR EXTERIOR/WET LOCATIONS, WHITE	2	12 (24)	HALOGEN	LITHONIA	ELT50MTH1212, 230/50 Hz
3		EXIT LIGHT (SINGLE FACE WALL MOUNTED) WITH BATTERY BACKUP	–	–	LED	LITHONIA	LQC1RELN, 230/50 Hz

LIGHT FIXTURE SCHEDULE
N.T.S.

MOTOR CONNECTION SCHEDULE

MTR NO.	DESCRIPTION	HP (KW)	CIRCUIT	LOCATION	VOLTAGE	STARTER TYPE	STARTER BY	STARTER LOC.	STARTER NEMA ENCL.	STARTER AUX.	DISCONNECT BY	DISCONNECT LOC.	DISCONNECT NEMA ENCL.	DISCONNECT SIZE	CIRCUIT BREAKER	NOTES/ ADDITIONAL REQUIREMENTS	MTR NO.
01	EF–1	1/12	PH1–7	PUMP ROOM	230/1ϕ	T–STAT	HC	PUMP RM	––	––	EC	UNIT	––	TOGGLE	–	–––	01
02	EF–2	1/25	PH1–10	DISINFECTION ROOM	230/1ϕ	MANUAL	EC	UNIT	––	––	EC	UNIT	––	TOGGLE	–	–––	02
03	EF–3	1/25	PH1–9	DRY STORAGE AREA	230/1ϕ	MANUAL	EC	UNIT	––	––	EC	UNIT	––	TOGGLE	–	–––	03
04	UH–1	7.5 KW	PH1–5	PUMP ROOM	230/1ϕ	––	MFR	UNIT	––	––	MFR	UNIT	––	––	–	–––	04
05	UH–2	5.0 KW	PH1–8	DISINFECTION ROOM	230/1ϕ	––	MFR	UNIT	––	––	MFR	UNIT	––	––	–	–––	05
06	PH–01	16.0 KW	PH1–25,27,29	PUMP ROOM	400/3ϕ	––	MFR	UNIT	––	––	EC	UNIT	––	100A	–	–––	06

MOTOR CONNECTION SCHEDULE
N.T.S.

UNLESS OTHERWISE NOTED, LINEAR DIMENSIONS SHOWN ARE IN MILLIMETERS.

1 0 1 2 3 4
1:50

BID DOCUMENT SUBMITTAL

SYMB	DESCRIPTION	DATE	
	BID DOCUMENT SUBMITTAL	09/09/10	BRG
	MISCELLANEOUS REVISIONS	09/09/10	BRG
	100% DESIGN SUBMITTAL	07/06/10	BRG
	95% DESIGN SUBMITTAL	06/03/10	NJB
APR			

This project was made possible by the United States Agency for International Development and the generous support of the American People through USAID Global Architecture and Engineering IQC Contracts.

DESIGNED BY: DJS
DWN BY: FMB
CHK BY: JAS
DATE: 09/09/2010
SUBMITTED BY: TETRA TECH
FILE NO.: WOLT05–E–10.1

USAID FROM THE AMERICAN PEOPLE

AESP

USAID – OIEE
GHAZI BOYS HIGH SCHOOL
ELECTRICAL FLOOR PLAN, SCHEDULES AND LEGEND
SHEET 1 OF 2

SHEET REFERENCE NUMBER:
LT0005
E–10.1

Z:\127–1298–10001\Work Orders\WO–LT\WO–LT–0005 GBHS Utility Design\CAD\Conceptual\Electrical\DWG\WOLT05–E–10.1.dwg 9/9/2010 10:20:18 AM Harris, Jessica

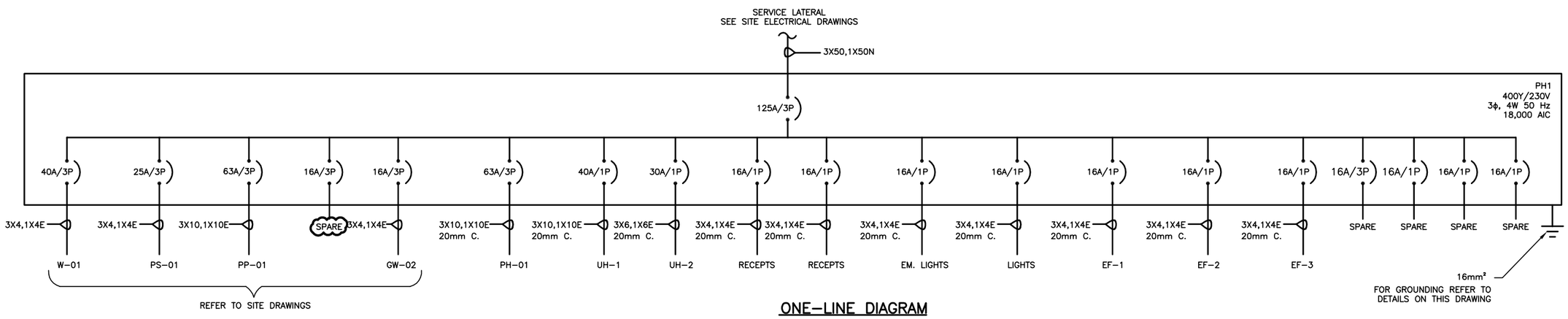

ONE-LINE DIAGRAM
N.T.S.

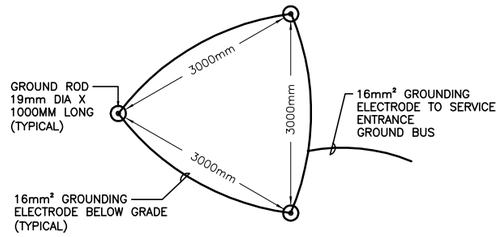

GROUND SYSTEM SHALL BE LOCATED APPROXIMATELY 1500mm OUTSIDE OF BUILDING FOOTERS.

GROUND SYSTEM TRIAD
N.T.S. — 1 — E-10.1 | E-10.2

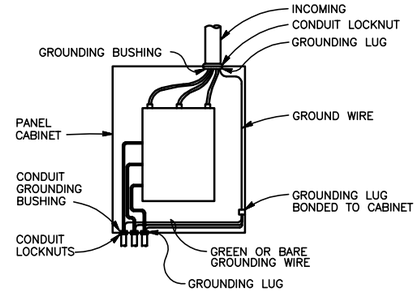

NOTES:
1. ALL WIRES TO BE NEATLY LACED.
2. AT THE POINT OF ATTACHMENT OF THE GROUNDING LUG TO THE CABINET, THE SURFACES SHALL BE SCRAPED FREE OF PAINT AND THOROUGHLY CLEANED TO INSURE PROPER BONDING.
3. NEUTRAL CONDUCTOR NOT SHOWN FOR CLARITY.
4. ALL GROUNDING LUGS AND CONDUCTORS SHALL BE COPPER.

TYPICAL PANEL GROUNDING
N.T.S. — 2 — E-10.2 | E-10.2

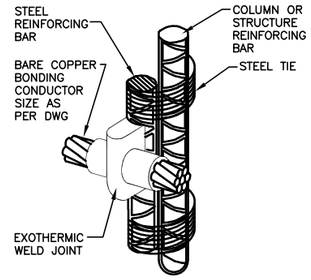

WELDING TO STEEL REINFORCING BAR STEEL
N.T.S. — 3 — E-10.2 | E-10.2

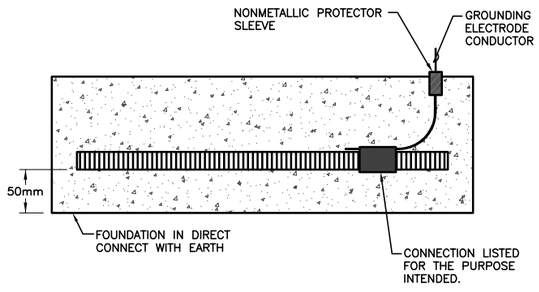

CONNECTION SHALL BE AS NEAR TO THE SERVICE PANEL AS PRACTICAL.

CONCRETE-ENCASED ELECTRODE
N.T.S. — 4 — E-10.2 | E-10.2

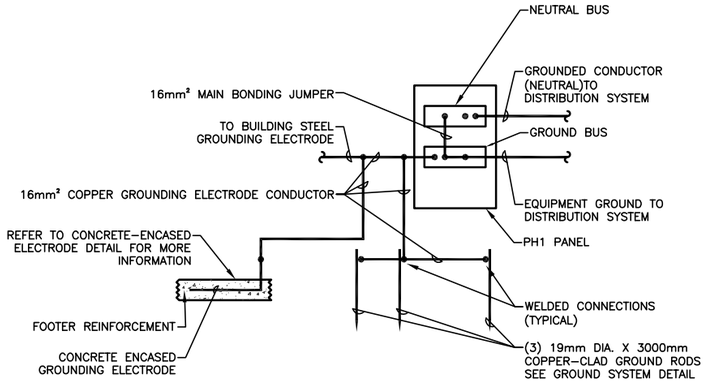

NOTES:
1. BOND OTHER METAL PIPING GROUND TERMINALS TO THE SERVICE GROUNDING ELECTRODE SYSTEM.
2. THE GROUNDING ELECTRODE CONDUCTOR SHALL ONLY BE CONNECTED TO GROUNDING ELECTRODES THAT ARE AVAILABLE ON THE PREMISES.
3. PROTECT GROUNDING ELECTRODE CONDUCTOR WITH NONMETALLIC RACEWAY WHEN CONDUCTOR PENETRATES FLOOR SLABS AND WALLS.
4. ALL GROUNDING ELECTRODE CONDUCTORS, BONDING JUMPERS AND GROUNDING CONDUCTORS SHALL BE COPPER.

BUILDING GROUNDING ELECTRODE CONNECTION
N.T.S. — 5 — E-10.2 | E-10.2

UNLESS OTHERWISE NOTED, LINEAR DIMENSIONS SHOWN ARE IN MILLIMETERS.

BID DOCUMENT SUBMITTAL

This project was made possible by the United States Agency for International Development and the generous support of the American People through USAID Global Architecture and Engineering IQC Contracts.

SYMB	DESCRIPTION	DATE	APR
	BID DOCUMENT SUBMITTAL	09/09/10	BRG
	100% DESIGN SUBMITTAL	07/06/10	BRG
	95% DESIGN SUBMITTAL	06/03/10	NJB

DESIGNED BY: DJS
DWN BY: FMB
CHK BY: JAS
DATE: 09/09/2010
SUBMITTED BY: TETRA TECH
FILE NO.: WOLT05-E-10.2

USAID FROM THE AMERICAN PEOPLE

AESP

USAID - OIEE
GHAZI BOYS HIGH SCHOOL
PUMP HOUSE
ELECTRICAL DIAGRAMS AND DETAILS

SHEET REFERENCE NUMBER:
LT0005
E-10.2

Z:\127-1298-10001\Work Orders\WO-LT\WO-LT-0005 GBHS Utility Design\CAD\Conceptual\Electrical\DWG\Superceded\WOLT05-E-10.2.dwg 9/9/2010 10:26:00 AM Harris, Jessica