ISLAMIC REPUBLIC OF AFGHANISTAN
AFGHANISTAN ENGINEERING SUPPORT PROGRAM (AESP)

GHAZI BOYS HIGH SCHOOL

SITE LAYOUT, GRADING, AND UTILITY DRAWINGS - ADDENDUM 2

KABUL, AFGHANISTAN

DATE: DECEMBER 22, 2010

ADDENDUM 2 SUBMITTAL

This project was made possible by the United States Agency for International Development and the generous support of the American People through USAID Global Architecture and Engineering IQC Contracts.

SYMB	DESCRIPTION	DATE	APR
2	MODIFICATION OF COVER SHEET FOR ADD #2	12/22/10	BRG
1	MODIFICATION OF COVER SHEET FOR ADD #1	11/01/10	BRG
	BID DOCUMENT SUBMITTAL	09/09/10	BRG
	100% DESIGN SUBMITTAL	07/06/10	BRG
	95% DESIGN SUBMITTAL	06/03/10	NJB

DESIGNED BY: NJB
DATE: 12/22/2010
DWN BY: JLH
SUBMITTED BY: TETRA TECH
CHK BY: BRG
FILE NO.: LT0005-G-01

USAID FROM THE AMERICAN PEOPLE

A E S P

USAID - OIEE
GHAZI BOYS HIGH SCHOOL
COVER SHEET

SHEET REFERENCE NUMBER:
LT0005 G-01

P:\1298\Work Orders\WO-LT\WO-LT-0005 GBHS Utility Design\CAD\Conceptual\Civil\DWG\WOLT05-G-01.dwg 12/21/2010 2:32:55 PM Harris, Jessica

INDEX OF DRAWINGS
GHAZI BOYS HIGH SCHOOL

SHT. REF. NO.	REVISIONS REV. NO.	REVISIONS ISSUE DATE	DRAWING TITLE
GENERAL DRAWINGS			
G-01	2 B C	12-22-10	COVER SHEET
G-02	2 B C	12-22-10	INDEX OF DRAWINGS
CIVIL DRAWINGS			
C-01	1 B	11-01-10	CIVIL LEGEND, SYMBOLS, GENERAL NOTES AND ABBREVIATIONS
C-02.1	0	07-06-10	SITE KEY PLAN
C-02.2	0 A	07-06-10	SITE DEMOLITION PLAN
C-03.1 TO C-03.6	2 B C	12-22-10	SITE LAYOUT PLANS
C-04.1 TO C-04.6	2 B C	12-22-10	GRADING AND DRAINAGE PLANS
C-05.1 TO C-05.4	1 B	11-01-10	SITE AND GRADING DETAILS
C-06	2 B C	12-22-10	COMBINED SITE INFRASTRUCTURE PLAN FOR UTILITIES
C-07.1 TO C-07.2	2 B C	12-22-10	WATER AND SEWER UTILITY PLANS
C-08.1 TO C-08.3	1 B C	11-01-10	WATER AND SEWER DETAILS
C-09.1 TO C-09.3	0	07-06-10	WELL DETAILS
C-10	1 B	11-01-10	POTABLE WATER TANK PLAN
C-11	0	07-06-10	POTABLE WATER TANK SECTIONS
C-12	1 B	11-01-10	POTABLE WATER TANK NOTES AND DETAILS
C-13	0	07-06-10	GREYWATER TANK PLANS
C-14	0	07-06-10	GREYWATER TANK SECTIONS
C-15	1 B	11-01-10	GREYWATER TANK NOTES AND DETAILS
C-16	1 B	11-01-10	SANITARY PUMP STATION
C-17	0	07-06-10	SANITARY PUMP STATION CONTROL PANEL DIAGRAM
C-18	1 B	11-01-10	SANITARY PUMP STATION DETAILS

SHT. REF. NO.	REVISIONS REV. NO.	REVISIONS ISSUE DATE	DRAWING TITLE
C-19	0	07-06-10	WASTEWATER TREATMENT PLANT LAYOUT
C-20	0	07-06-10	WASTEWATER TREATMENT PROCESS AND INSTRUMENTATION DIAGRAM
C-21	0	07-06-10	WASTEWATER TREATMENT PLANT SLAB DETAILS
C-22	0	07-06-10	DOMESTIC WATER PUMP HOUSE LAYOUT PLAN
ARCHITECTURAL DRAWINGS			
A-01	0	07-06-10	PUMP HOUSE SYMBOLS AND ABBREVIATIONS
A-02	0	07-06-10	PUMP HOUSE FLOOR PLAN
A-03	0	07-06-10	PUMP HOUSE ROOF PLAN
A-04.1 TO A-04.2	0	07-06-10	PUMP HOUSE BUILDING ELEVATIONS
A-05	0	07-06-10	PUMP HOUSE BUILDING SECTIONS
A-06	0	07-06-10	PUMP HOUSE REFLECTED CEILING PLAN
A-07	0	07-06-10	PUMP HOUSE WALL SECTIONS AND DETAILS
A-08	0	07-06-10	PUMP HOUSE MISCELLANEOUS DETAILS
A-09	0	07-06-10	PUMP HOUSE STAIR DETAILS AND SCHEDULES
STRUCTURAL DRAWINGS			
S-01.1 TO S-01.2	0	07-06-10	PUMP HOUSE STRUCTURAL GENERAL NOTES
S-02	0	07-06-10	PUMP HOUSE FOUNDATION PLAN
S-03	0	07-06-10	PUMP HOUSE ROOF FRAMING PLAN
S-04	0	07-06-10	PUMP HOUSE SECTION
S-05	0	07-06-10	PUMP HOUSE TYPICAL CMU WALL DETAILS
S-06	0	07-06-10	PUMP HOUSE ROOF AND FOUNDATION DETAILS
MECHANICAL DRAWINGS			
M-01	0	07-06-10	PUMP HOUSE MECHANICAL FLOOR PLAN

SHT. REF. NO.	REVISIONS REV. NO.	REVISIONS ISSUE DATE	DRAWING TITLE
ELECTRICAL DRAWINGS			
E-01	0	07-06-10	ELECTRICAL LEGEND, SYMBOLS, GENERAL NOTES AND ABBREVIATIONS
E-02	2 B C	12-22-10	ELECTRICAL SITE PLAN
E-03.1 TO E03.2	2 B C	12-22-10	ENLARGED ELECTRICAL SITE PLANS
E-04	1 C	12-22-10	ENLARGED ELECTRICAL GROUNDING PLAN
E-05	0	07-06-10	ELECTRICAL ONE-LINE DIAGRAM
E-06	0	07-06-10	ELECTRICAL UNIT SUBSTATION ELEVATION
E-07	0	07-06-10	ELECTRICAL DETAILS UNDERGROUND STRUCTURES
E-08.1	1 C	12-22-10	ELECTRICAL DETAILS FUEL OIL TANK
E-08.2	0 C	12-22-10	ELECTRICAL DETAILS FUEL SYSTEM
E-09	0	07-06-10	ELECTRICAL DETAILS TRANSFORMER AND GENERATOR
E-10.1	0	07-06-10	PUMP HOUSE ELECTRICAL FLOOR PLAN, SCHEDULES AND LEGEND
E-10.2	0	07-06-10	PUMP HOUSE ELECTRICAL DIAGRAMS AND DETAILS

ADDENDUM 2 SUBMITTAL

SYMB	DESCRIPTION	DATE	APR
A	ADDENDUM 2 DRAWINGS	12/22/10	BRG
B	SHEET MODIFICATIONS FOR NEW ADMIN BLDG	11/01/10	BRG
A	BID DOCUMENT SUBMITTAL	09/09/10	BRG
	100% DESIGN SUBMITTAL	07/06/10	BRG
	95% DESIGN SUBMITTAL	06/03/10	NJB

This project was made possible by the United States Agency for International Development and the generous support of the American People through USAID Global Architecture and Engineering IQC Contracts.

DESIGNED BY: NJB
DATE: 12/22/2010
DWN BY: JLH
SUBMITTED BY: TETRA TECH
CHK BY: BRG
FILE NO.: LT0005-G-02

USAID FROM THE AMERICAN PEOPLE

A E S P

USAID – OIEE
GHAZI BOYS HIGH SCHOOL
INDEX OF DRAWINGS

SHEET REFERENCE NUMBER:
LT0005 G-02

P:\1298\Work Orders\WO-LT\WO-LT-0005 GBHS Utility Design\CAD\Conceptual\Civil\DWG\WOLT05-G-02.dwg 12/21/2010 4:25:44 PM Harris, Jessica

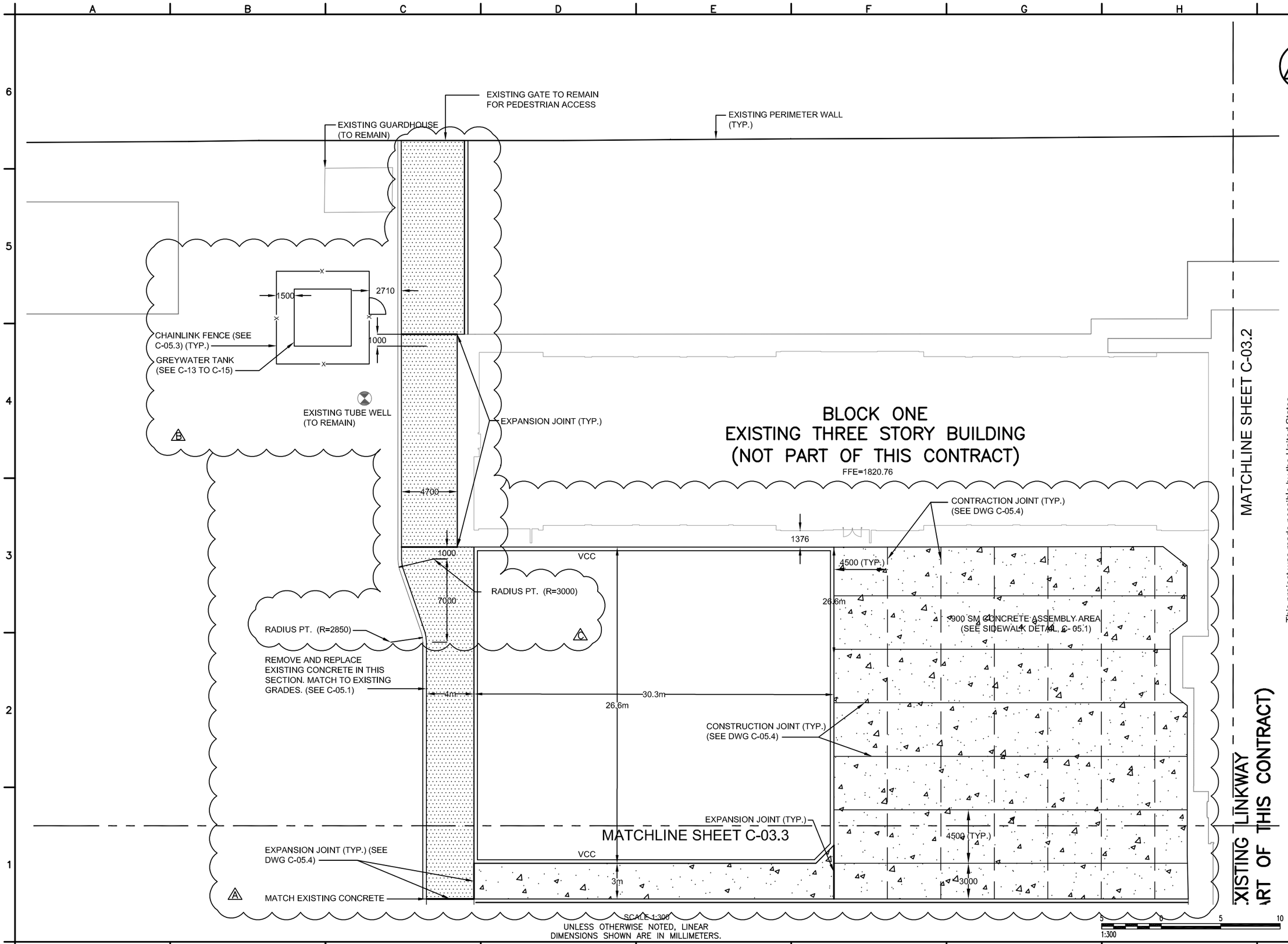

N

ADDENDUM 2 SUBMITTAL

SYMB	DESCRIPTION	DATE	APR
4	WIDENED SIDEWALK FOR ENTRANCE EX. GATE	12/22/10	BRG
3	MOVED GW TANK TO MISS EXISTING WELL	12/22/10	BRG
2	CONTROL JOINTS FOR CONCRETE	11/01/10	BRG
	BID DOCUMENT SUBMITTAL	09/09/10	BRG
	100% DESIGN SUBMITTAL	07/06/10	BRG
	95% DESIGN SUBMITTAL	06/03/10	NJB

This project was made possible by the United States Agency for International Development and the generous support of the American People through USAID Global Architecture and Engineering IQC Contracts.

USAID FROM THE AMERICAN PEOPLE

A E S P

DESIGNED BY: JLH	DATE: 12/22/2010
DWN BY: JLH	SUBMITTED BY: TETRA TECH
CHK BY: NJB	FILE NO.: LT0005-C-03

USAID – OIEE
GHAZI BOYS HIGH SCHOOL
SITE LAYOUT PLAN
SHEET 1 OF 6

SHEET REFERENCE NUMBER:
LT0005 C-03.1

P:\1298\Work Orders\WO-LT\WO-LT-0005 GBHS Utility Design\CAD\Conceptual\Civil\DWG\WOLT05-C-003.1 to 003.6 latest.dwg 12/22/2010 1:46:15 PM Harris, Jessica

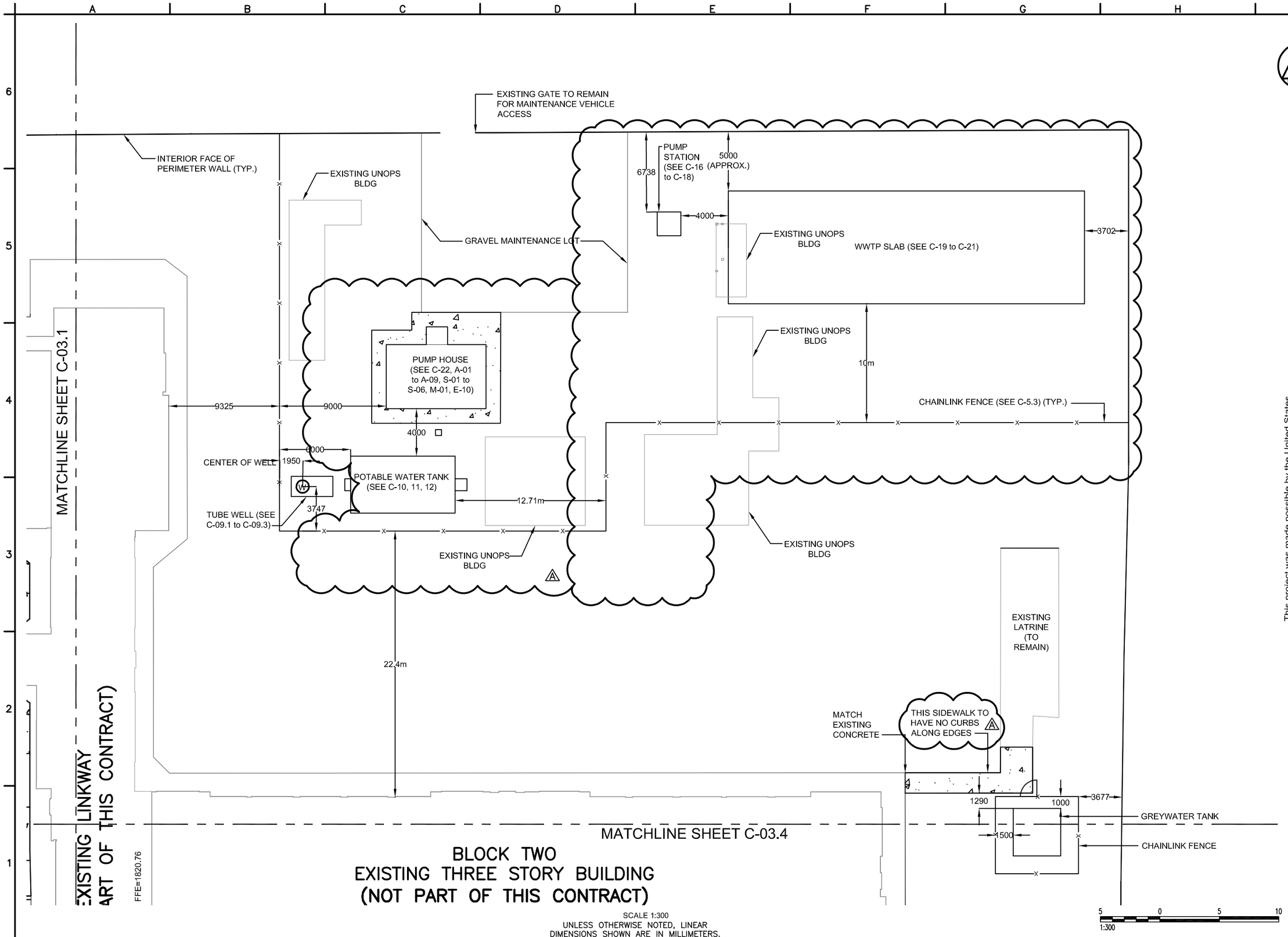

ADDENDUM 2 SUBMITTAL

SYMB	DESCRIPTION	DATE	APR
4	MOVED WATER RESERVOIR AND PUMP HOUSE	12/22/10	BRG
	BID DOCUMENT SUBMITTAL	09/09/10	BRG
	WWTP MOVEMENT/FENCE REALIGNMENT	09/09/10	BRG
	100% DESIGN SUBMITTAL	07/06/10	BRG
	95% DESIGN SUBMITTAL	06/03/10	NJB

This project was made possible by the United States Agency for International Development and the generous support of the American People through USAID Global Architecture and Engineering IQC Contracts.

DESIGNED BY: JLH | DATE: 12/22/2010
DWN BY: JLH | SUBMITTED BY: TETRA TECH
CHK BY: NJB | FILE NO.: LT0005-C-03

USAID FROM THE AMERICAN PEOPLE

A E S P

USAID – OIEE
GHAZI BOYS HIGH SCHOOL
SITE LAYOUT PLAN
SHEET 2 OF 6

SHEET REFERENCE NUMBER:
LT0005
C-03.2

P:\1298\Work Orders\WO-LT\WO-LT-0005 GBHS Utility Design\CAD\Conceptual\Civil\DWG\WOLT05-C-003.1 to 003.6.dwg 12/22/2010 10:17:30 AM Harris, Jessica

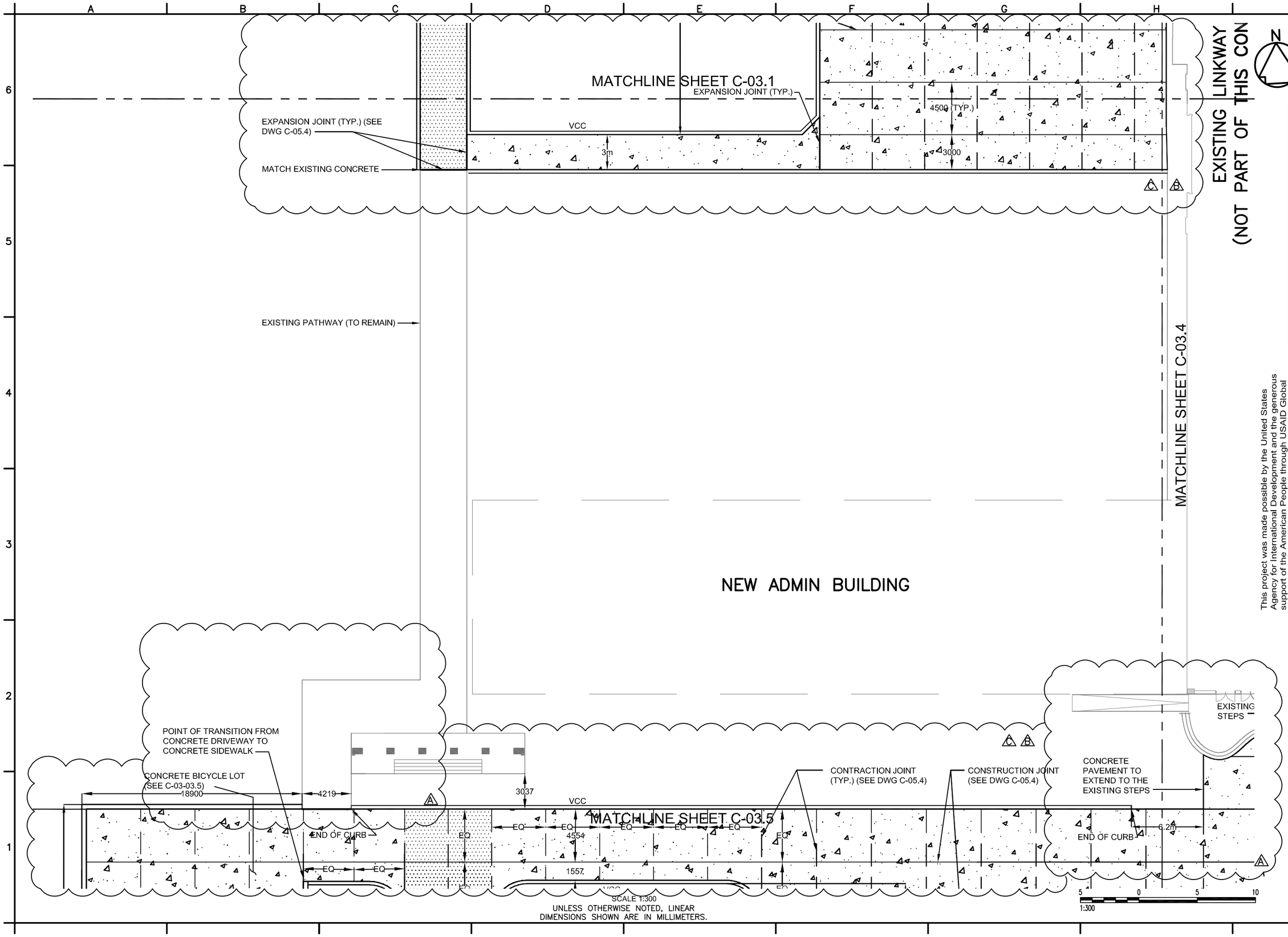

ADDENDUM 2 SUBMITTAL

SYMB	DESCRIPTION	DATE	APR
4	MODIFIED CONTROL JOINTS & BICYCLE PARKING AREA	12/22/10	BRG
3	CONTROL JOINTS FOR CONCRETE	11/01/10	BRG
2	SIDEWALK MODS FOR NEW ADMIN BUILDING	11/01/10	BRG
	BID DOCUMENT SUBMITTAL	09/09/10	BRG
	100% DESIGN SUBMITTAL	07/06/10	BRG
	95% DESIGN SUBMITTAL	06/03/10	NJB

This project was made possible by the United States Agency for International Development and the generous support of the American People through USAID Global Architecture and Engineering IQC Contracts.

USAID FROM THE AMERICAN PEOPLE

A E S P

DESIGNED BY: JLH | DATE: 12/22/2010
DWN BY: JLH | SUBMITTED BY: TETRA TECH
CHK BY: NJB | FILE NO.: LT0005-C-03

USAID - OIEE
GHAZI BOYS HIGH SCHOOL
SITE LAYOUT PLAN
SHEET 3 OF 6

SHEET REFERENCE NUMBER:
LT0005 C-03.3

P:\1298\Work Orders\WO-LT\WO-LT-0005 GBHS Utility Design\CAD\Conceptual\Civil\DWG\WOLT05-C-003.1 to 003.6.dwg 12/22/2010 10:17:53 AM Harris, Jessica

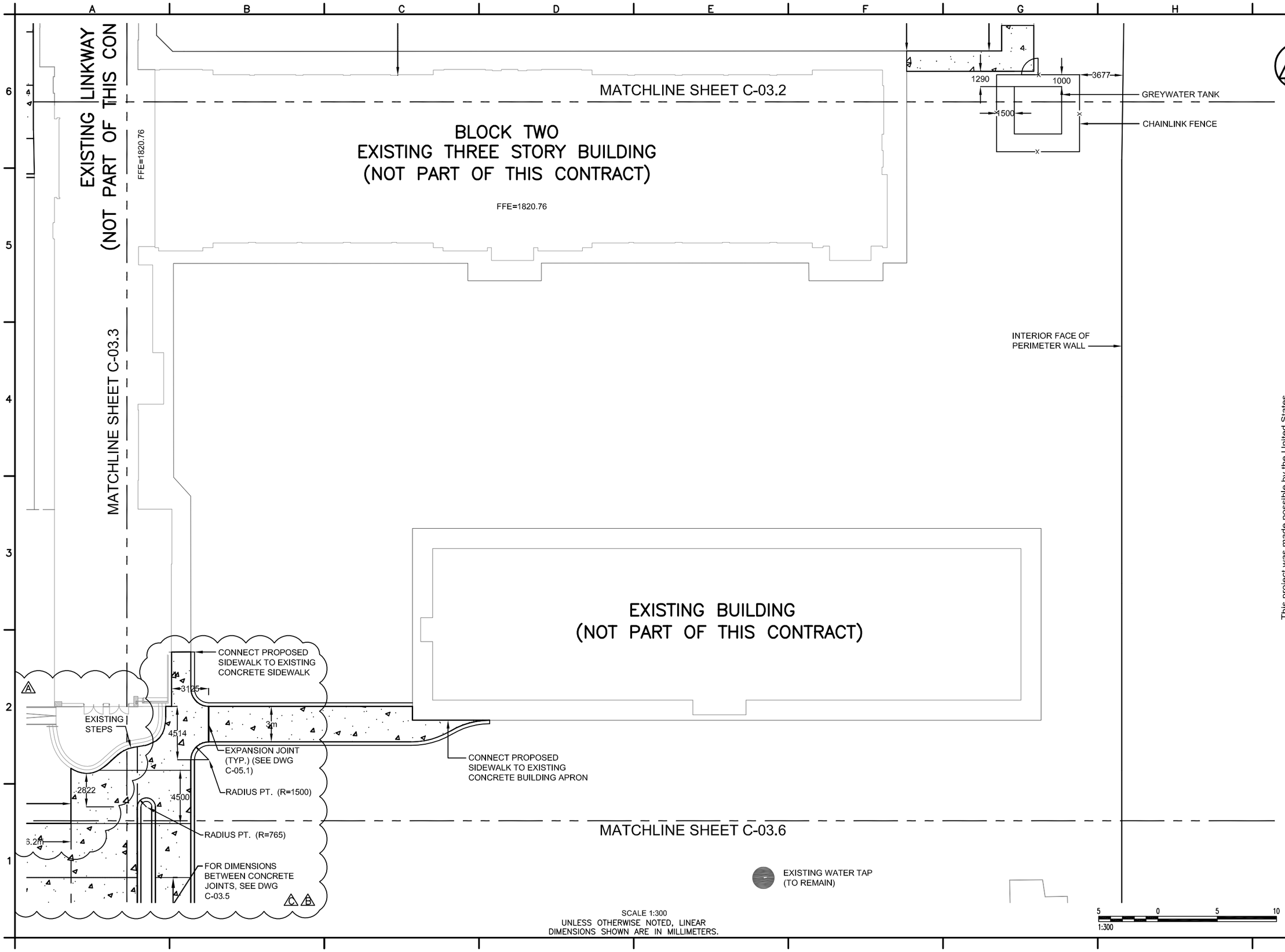

N

ADDENDUM 2 SUBMITTAL

SYMB	DESCRIPTION	DATE	APR
4	MODIFIED CONTROL JOINTS FOR CONCRETE	12/22/10	BRG
3	CONTROL JOINTS FOR CONCRETE	11/01/10	BRG
2	SIDEWALK MODS FOR NEW ADMIN BUILDING	11/01/10	BRG
1	BID DOCUMENT SUBMITTAL	09/09/10	BRG
	100% DESIGN SUBMITTAL	07/06/10	BRG
	95% DESIGN SUBMITTAL	06/03/10	NJB

This project was made possible by the United States Agency for International Development and the generous support of the American People through USAID Global Architecture and Engineering IQC Contracts.

DESIGNED BY: JLH
DATE: 12/22/2010
DWN BY: JLH
SUBMITTED BY: TETRA TECH
CHK BY: NJB
FILE NO.: LT0005-C-03

USAID FROM THE AMERICAN PEOPLE

A E S P

USAID - OIEE
GHAZI BOYS HIGH SCHOOL
SITE LAYOUT PLAN
SHEET 4 OF 6

SHEET REFERENCE NUMBER:
LT0005 C-03.4

P:\1298\Work Orders\WO-LT\WO-LT-0005 GBHS Utility Design\CAD\Conceptual\Civil\DWG\WOLT05-C-003.1 to 003.6.dwg 12/22/2010 10:35:23 AM Harris, Jessica

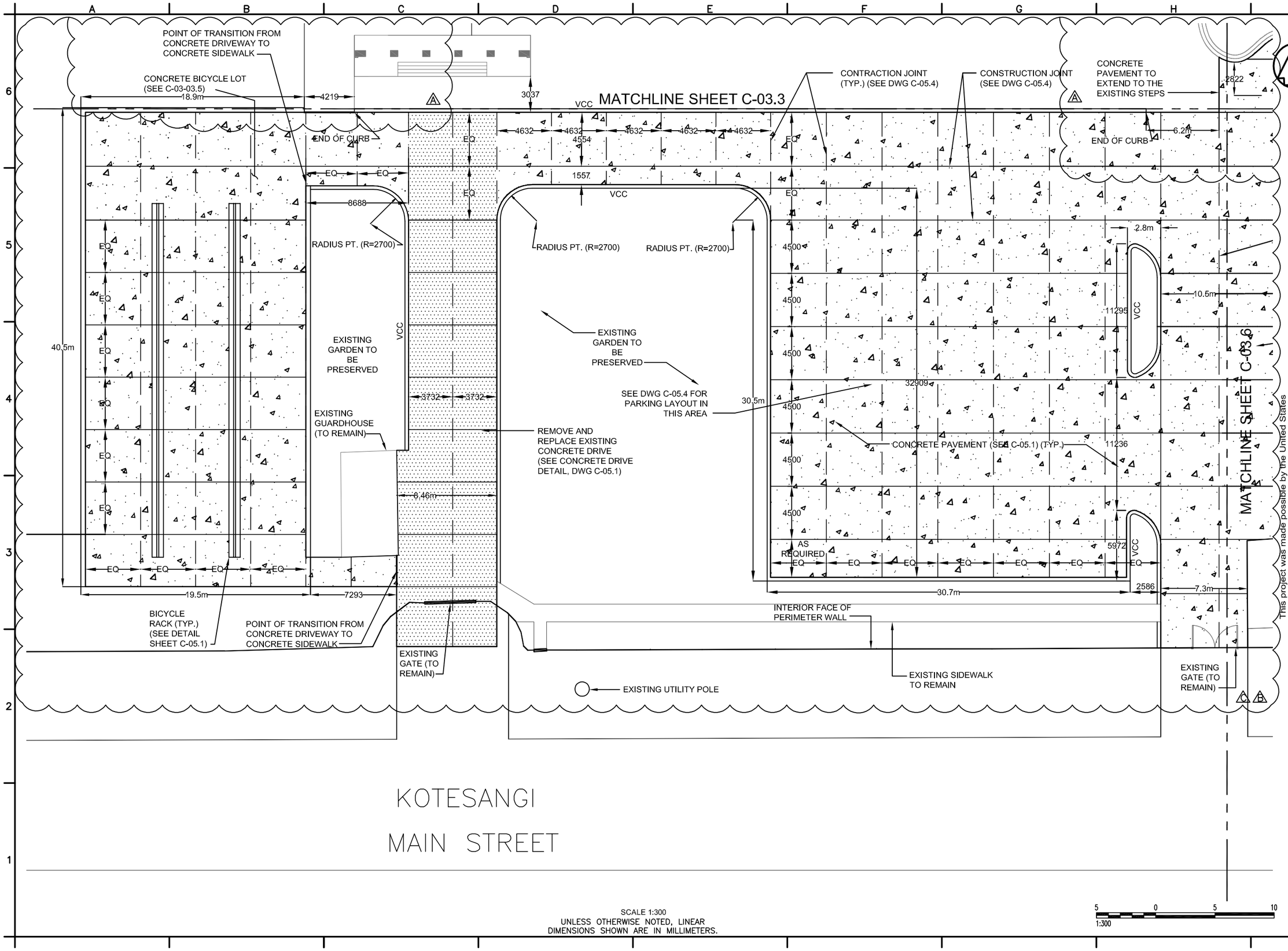

SCALE 1:300
UNLESS OTHERWISE NOTED, LINEAR DIMENSIONS SHOWN ARE IN MILLIMETERS.

1:300

ADDENDUM 2 SUBMITTAL

SYMB	DESCRIPTION	DATE	APR
4	MODIFIED CONTROL JOINTS & BICYCLE PARKING AREA	12/22/10	BRG
3	CONTROL JOINTS FOR CONCRETE SIDEWALK MODS FOR NEW ADMIN BUILDING	11/01/10	BRG
2	BID DOCUMENT SUBMITTAL	11/01/10	BRG
	100% DESIGN SUBMITTAL	09/09/10	BRG
	95% DESIGN SUBMITTAL	07/06/10	BRG
		06/03/10	NJB

DESIGNED BY: JLH
DATE: 12/22/2010
DWN BY: JLH
SUBMITTED BY: TETRA TECH
CHK BY: NJB
FILE NO.: LT0005-C-03

USAID FROM THE AMERICAN PEOPLE

A E S P

This project was made possible by the United States Agency for International Development and the generous support of the American People through USAID Global Architecture and Engineering IQC Contracts.

USAID - OIEE
GHAZI BOYS HIGH SCHOOL
SITE LAYOUT PLAN
SHEET 5 OF 6

SHEET REFERENCE NUMBER:
LT0005 C-03.5

P:\1298\Work Orders\WO-LT\WO-LT-0005 GBHS Utility Design\CAD\Conceptual\Civil\DWG\WOLT05-C-003.1 to 003.6.dwg 12/22/2010 12:59:50 PM Harris, Jessica

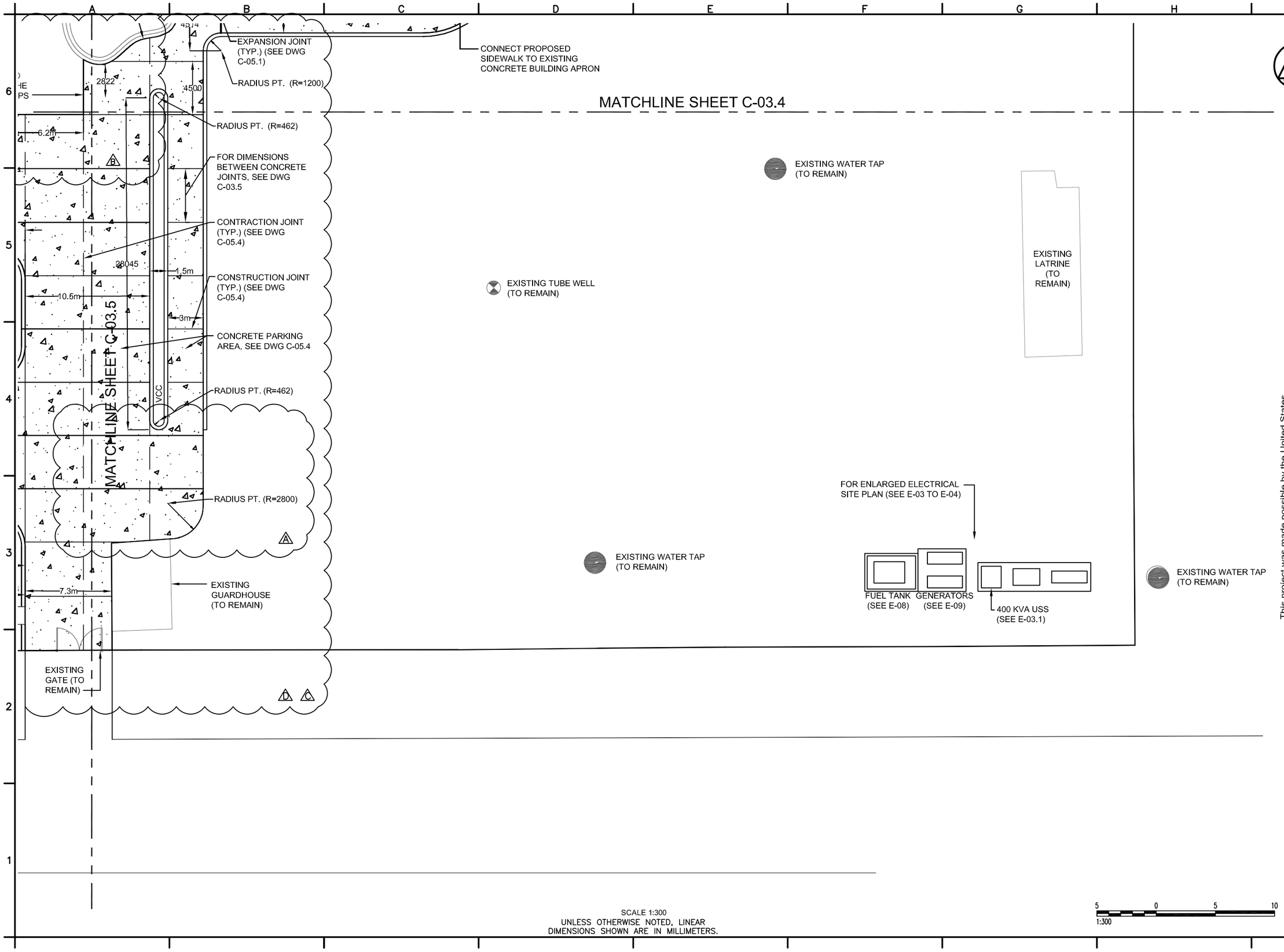

SCALE 1:300
UNLESS OTHERWISE NOTED, LINEAR DIMENSIONS SHOWN ARE IN MILLIMETERS.

5 0 5 10
1:300

ADDENDUM 2 SUBMITTAL

SYMB	DESCRIPTION	DATE	APR
4	MODIFIED CONTROL JOINTS FOR CONCRETE	12/22/10	BRG
3	CONTROL JOINTS FOR CONCRETE	11/01/10	BRG
2	SIDEWALK MODS FOR NEW ADMIN BUILDING	11/01/10	BRG
1	BID DOCUMENT SUBMITTAL	09/09/10	BRG
	ELIMINATION OF CURB	09/09/10	BRG
	100% DESIGN SUBMITTAL	07/06/10	BRG
	95% DESIGN SUBMITTAL	06/03/10	NJB

DESIGNED BY: JLH
DATE: 12/22/2010
DWN BY: JLH
SUBMITTED BY: TETRA TECH
CHK BY: NJB
FILE NO.: LT0005-C-03

This project was made possible by the United States Agency for International Development and the generous support of the American People through USAID Global Architecture and Engineering IQC Contracts.

USAID FROM THE AMERICAN PEOPLE

A E S P

USAID - OIEE
GHAZI BOYS HIGH SCHOOL
SITE LAYOUT PLAN
SHEET 6 OF 6

SHEET REFERENCE NUMBER:
LT0005 C-03.6

P:\1298\Work Orders\WO-LT\WO-LT-0005 GBHS Utility Design\CAD\Conceptual\Civil\DWG\WOLT05-C-003.1 to 003.6.dwg 12/22/2010 1:04:18 PM Harris, Jessica

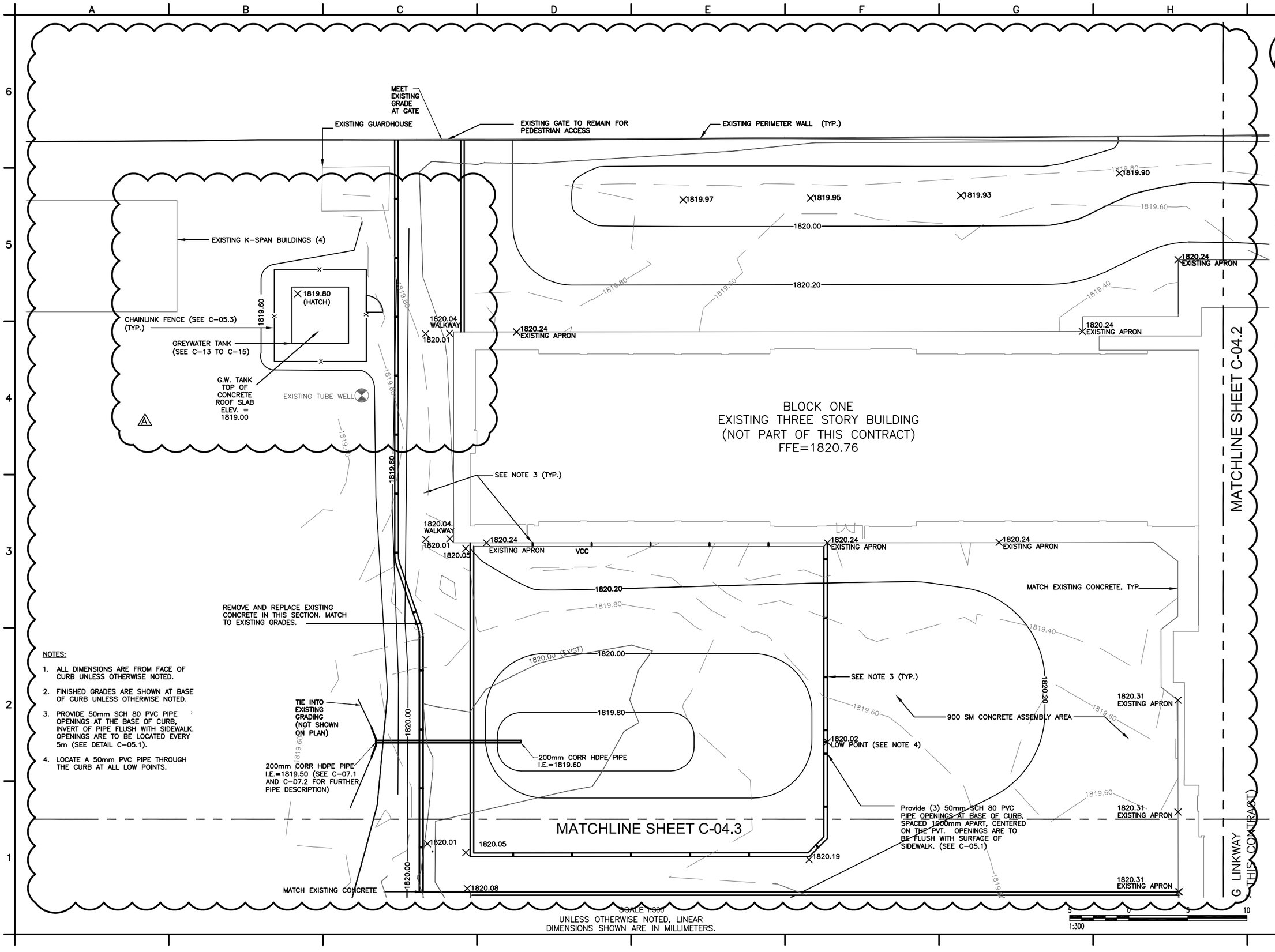

NOTES:

1. ALL DIMENSIONS ARE FROM FACE OF CURB UNLESS OTHERWISE NOTED.
2. FINISHED GRADES ARE SHOWN AT BASE OF CURB UNLESS OTHERWISE NOTED.
3. PROVIDE 50mm SCH 80 PVC PIPE OPENINGS AT THE BASE OF CURB, INVERT OF PIPE FLUSH WITH SIDEWALK. OPENINGS ARE TO BE LOCATED EVERY 5m (SEE DETAIL C-05.1).
4. LOCATE A 50mm PVC PIPE THROUGH THE CURB AT ALL LOW POINTS.

SCALE 1:300

UNLESS OTHERWISE NOTED, LINEAR DIMENSIONS SHOWN ARE IN MILLIMETERS.

ADDENDUM 2 SUBMITTAL

This project was made possible by the United States Agency for International Development and the generous support of the American People through USAID Global Architecture and Engineering IQC Contracts.

SYMB	DESCRIPTION	DATE	APR
4	MOVED GW TANK TO MISS EXISTING WELL	12/22/10	BRG
	BID DOCUMENT SUBMITTAL	09/09/10	BRG
	REVISED DRAINAGE PLAN	09/09/10	BRG
	100% DESIGN SUBMITTAL	07/06/10	BRG
	95% DESIGN SUBMITTAL	06/03/10	NJB

DESIGNED BY: JLH
DATE: 12/22/2010
DWN BY: JLH
SUBMITTED BY: TETRA TECH
CHK BY: BRG
FILE NO.: LT0005-C-04

USAID FROM THE AMERICAN PEOPLE

A E S P

USAID - OIEE
GHAZI BOYS HIGH SCHOOL
GRADING AND DRAINAGE PLAN
SHEET 1 OF 6

SHEET REFERENCE NUMBER:
LT0005 C-04.1

P:\1298\Work Orders\WO-LT\WO-LT-0005 GBHS Utility Design\CAD\Conceptual\Civil\DWG\LT0005-C-04\02-Civil\LT0005-C-04.dwg 12/22/2010 3:03:13 PM Harris, Jessica

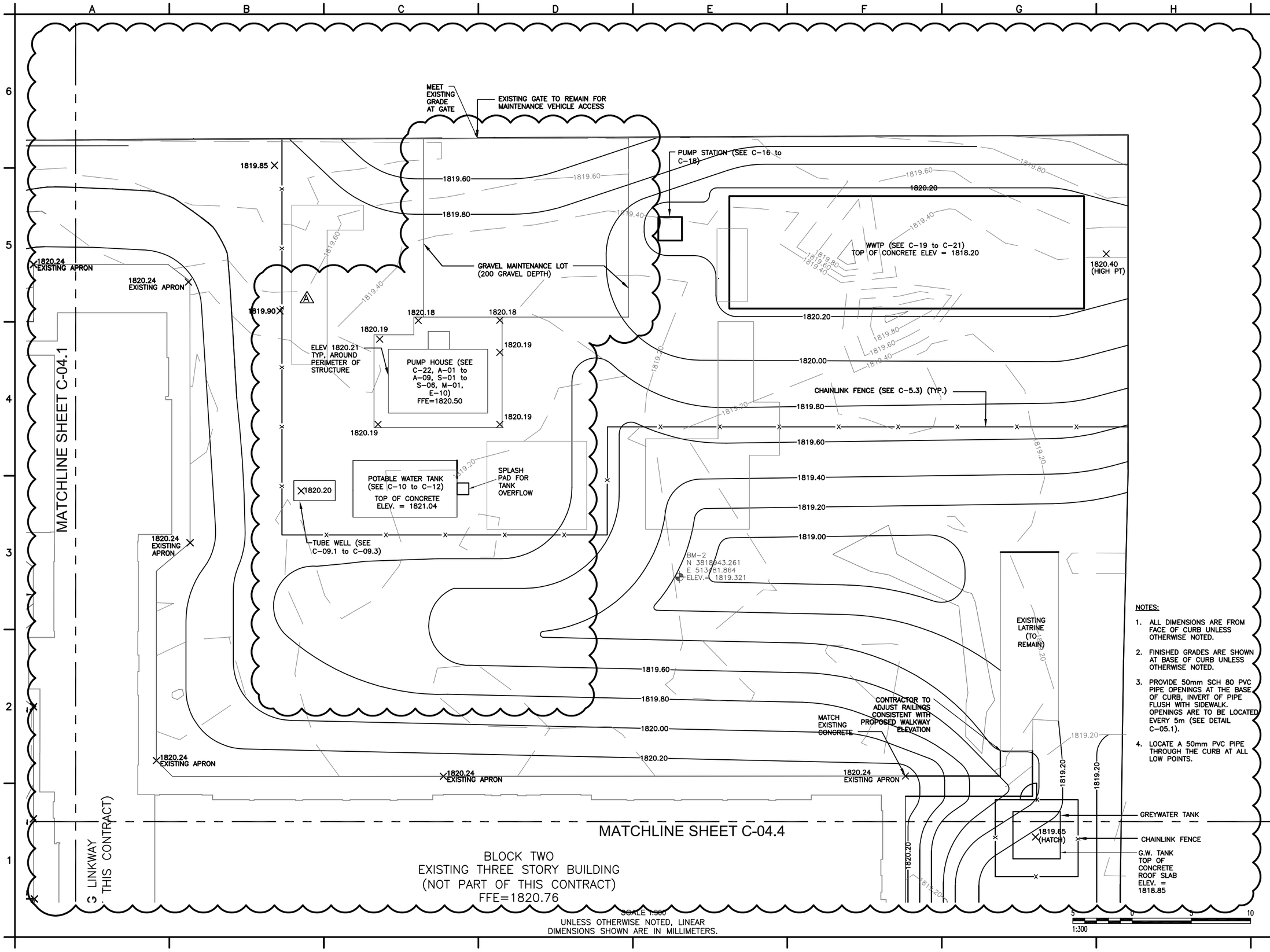

NOTES:

1. ALL DIMENSIONS ARE FROM FACE OF CURB UNLESS OTHERWISE NOTED.
2. FINISHED GRADES ARE SHOWN AT BASE OF CURB UNLESS OTHERWISE NOTED.
3. PROVIDE 50mm SCH 80 PVC PIPE OPENINGS AT THE BASE OF CURB, INVERT OF PIPE FLUSH WITH SIDEWALK. OPENINGS ARE TO BE LOCATED EVERY 5m (SEE DETAIL C-05.1).
4. LOCATE A 50mm PVC PIPE THROUGH THE CURB AT ALL LOW POINTS.

ADDENDUM 2 SUBMITTAL

This project was made possible by the United States Agency for International Development and the generous support of the American People through USAID Global Architecture and Engineering IQC Contracts.

SYMB	DESCRIPTION	DATE	APR
4	MOVED WATER RESERVOIR AND PUMP HOUSE	12/22/10	BRG
	BID DOCUMENT SUBMITTAL	09/09/10	BRG
	REVISED DRAINAGE PLAN	09/09/10	BRG
	100% DESIGN SUBMITTAL	07/06/10	BRG
	95% DESIGN SUBMITTAL	06/03/10	NJB

DESIGNED BY: JLH | DATE: 12/22/2010
DWN BY: JLH | SUBMITTED BY: TETRA TECH
CHK BY: BRG | FILE NO.: LT0005-C-04

USAID FROM THE AMERICAN PEOPLE

A E S P

USAID – OIEE
GHAZI BOYS HIGH SCHOOL
GRADING AND DRAINAGE PLAN
SHEET 2 OF 6

SHEET REFERENCE NUMBER:
LT0005 C-04.2

P:\1298\Work Orders\WO-LT\WO-LT-0005 GBHS Utility Design\CAD\Conceptual\Civil\DWG\LT0005-C-04\02-Civil\LT0005-C-04.dwg 12/22/2010 3:03:56 PM Harris, Jessica

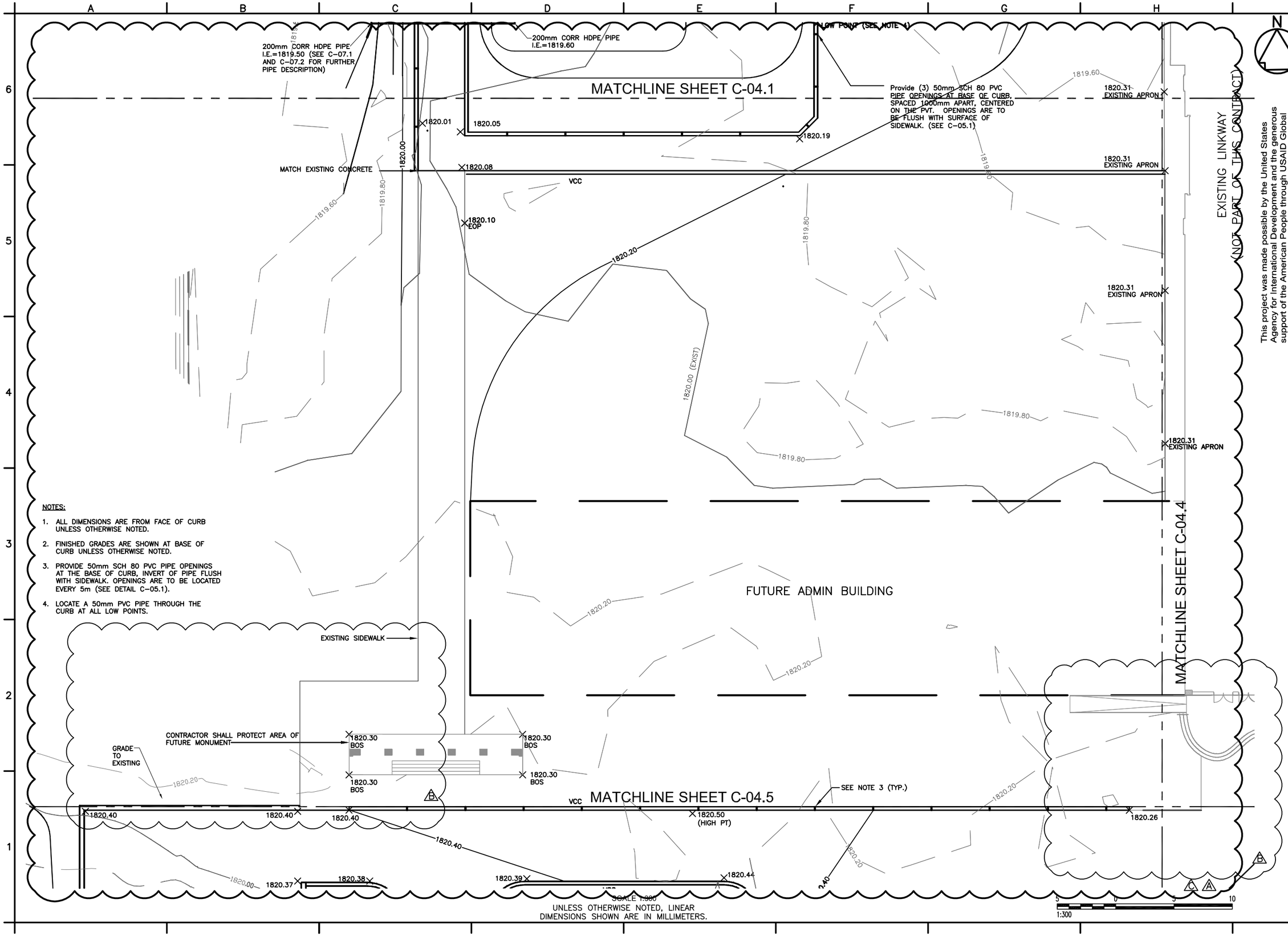

NOTES:

1. ALL DIMENSIONS ARE FROM FACE OF CURB UNLESS OTHERWISE NOTED.
2. FINISHED GRADES ARE SHOWN AT BASE OF CURB UNLESS OTHERWISE NOTED.
3. PROVIDE 50mm SCH 80 PVC PIPE OPENINGS AT THE BASE OF CURB, INVERT OF PIPE FLUSH WITH SIDEWALK. OPENINGS ARE TO BE LOCATED EVERY 5m (SEE DETAIL C-05.1).
4. LOCATE A 50mm PVC PIPE THROUGH THE CURB AT ALL LOW POINTS.

ADDENDUM 2 SUBMITTAL

This project was made possible by the United States Agency for International Development and the generous support of the American People through USAID Global Architecture and Engineering IQC Contracts.

SYMB	DESCRIPTION	DATE	APR
4	ADDED PERFORATED CURB	12/22/10	BRG
3	SIDEWALK MODS FOR NEW ADMIN BUILDING	11/01/10	BRG
2	BID DOCUMENT SUBMITTAL	09/09/10	BRG
1	REVISED DRAINAGE PLAN	09/09/10	BRG
	100% DESIGN SUBMITTAL	07/06/10	BRG
	95% DESIGN SUBMITTAL	06/03/10	NJB

DESIGNED BY: JLH
DATE: 12/22/2010
DWN BY: JLH
SUBMITTED BY: TETRA TECH
CHK BY: BRG
FILE NO.: LT0005-C-04

USAID FROM THE AMERICAN PEOPLE

A E S P

USAID – OIEE
GHAZI BOYS HIGH SCHOOL
GRADING AND DRAINAGE PLAN
SHEET 3 OF 6

SHEET REFERENCE NUMBER:
LT0005 C-04.3

P:\1298\Work Orders\WO-LT\WO-LT-0005 GBHS Utility Design\CAD\Conceptual\Civil\DWG\LT0005-C-04\02-Civil\LT0005-C-04.dwg 12/21/2010 3:18:48 PM Harris, Jessica

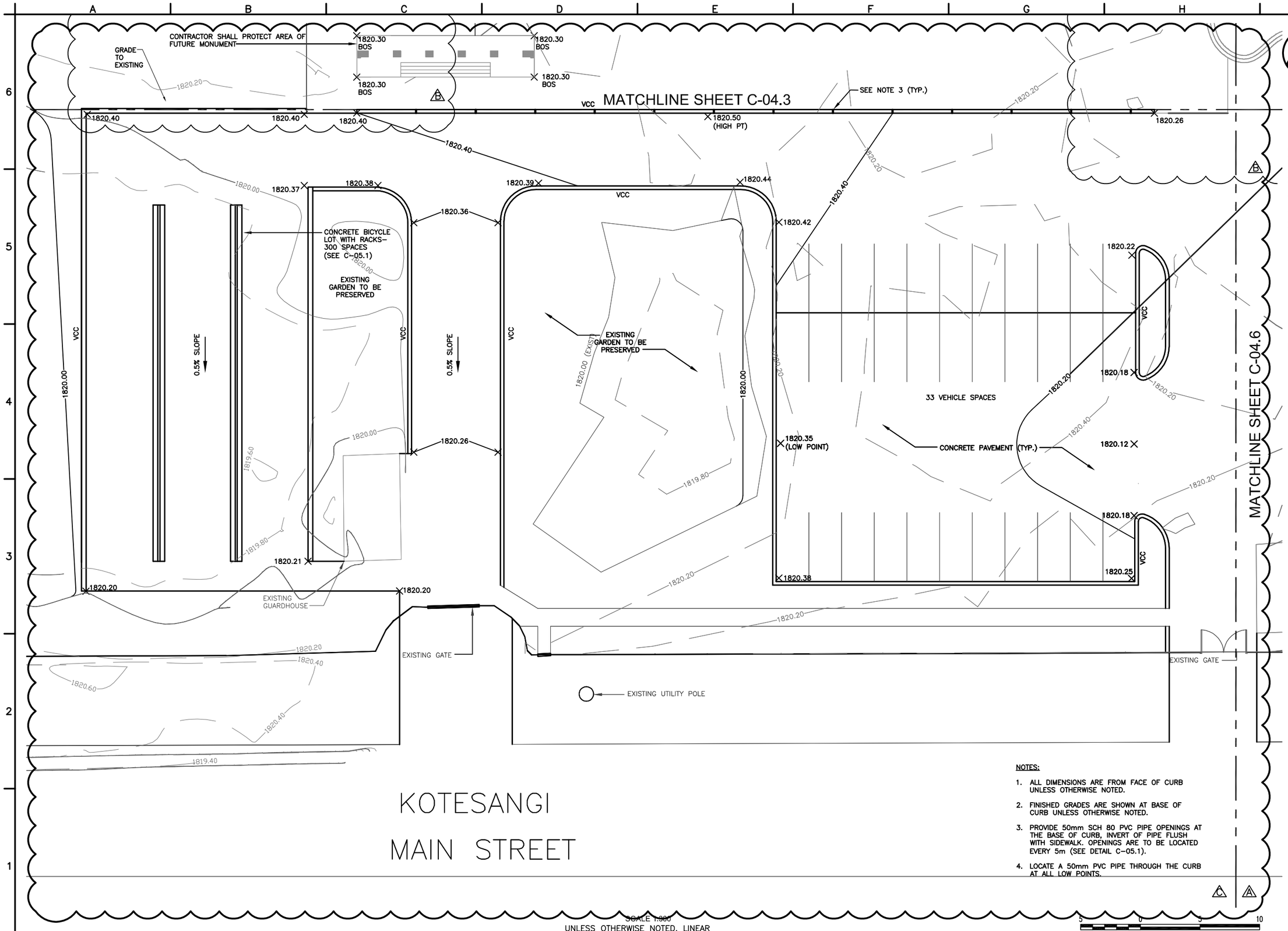

NOTES:

1. ALL DIMENSIONS ARE FROM FACE OF CURB UNLESS OTHERWISE NOTED.
2. FINISHED GRADES ARE SHOWN AT BASE OF CURB UNLESS OTHERWISE NOTED.
3. PROVIDE 50mm SCH 80 PVC PIPE OPENINGS AT THE BASE OF CURB, INVERT OF PIPE FLUSH WITH SIDEWALK. OPENINGS ARE TO BE LOCATED EVERY 5m (SEE DETAIL C-05.1).
4. LOCATE A 50mm PVC PIPE THROUGH THE CURB AT ALL LOW POINTS.

SCALE 1:300
UNLESS OTHERWISE NOTED, LINEAR DIMENSIONS SHOWN ARE IN MILLIMETERS.

5 0 5 10
1:300

ADDENDUM 2 SUBMITTAL

SYMB	DESCRIPTION	DATE	APR
4	MODIFIED GRADES IN BIKE PARKING AREA	12/22/10	BRG
3	SIDEWALK MODS FOR NEW ADMIN BUILDING	11/01/10	BRG
2	BID DOCUMENT SUBMITTAL	09/09/10	BRG
	REVISED DRAINAGE PLAN	09/09/10	BRG
	100% DESIGN SUBMITTAL	07/06/10	BRG
	95% DESIGN SUBMITTAL	06/03/10	NJB

This project was made possible by the United States Agency for International Development and the generous support of the American People through USAID Global Architecture and Engineering IQC Contracts.

DESIGNED BY: JLH
DATE: 12/22/2010
DWN BY: JLH
SUBMITTED BY: TETRA TECH
CHK BY: BRG
FILE NO.: LT0005-C-04

USAID FROM THE AMERICAN PEOPLE

A E S P

USAID - OIEE
GHAZI BOYS HIGH SCHOOL
GRADING AND DRAINAGE PLAN
SHEET 5 OF 6

SHEET REFERENCE NUMBER:
LT0005 C-04.5

P:\1298\Work Orders\WO-LT\WO-LT-0005 GBHS Utility Design\CAD\Conceptual\Civil\DWG\LT0005-C-04\02-Civil\LT0005-C-04.dwg 12/21/2010 3:20:35 PM Harris, Jessica

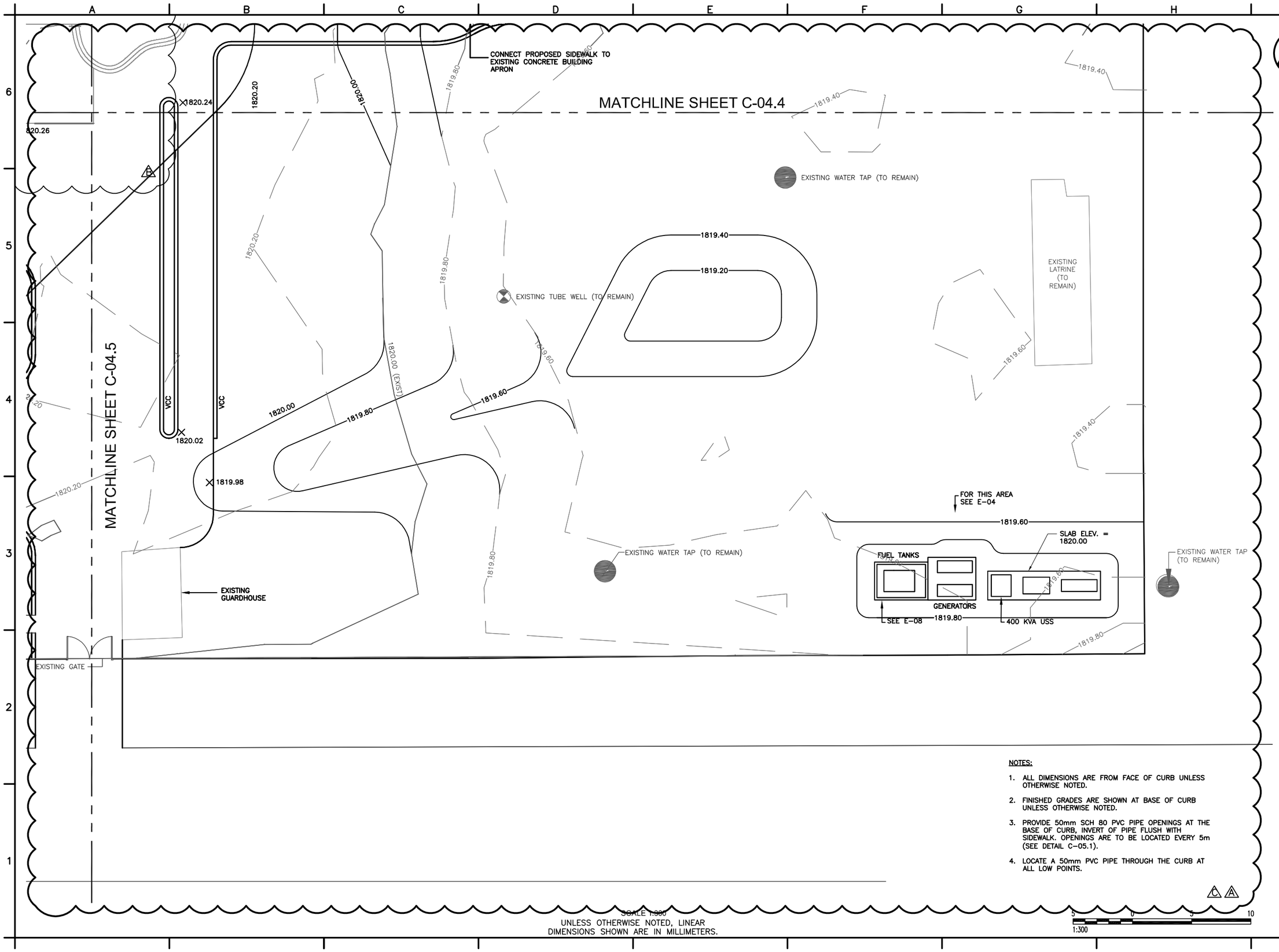

NOTES:

1. ALL DIMENSIONS ARE FROM FACE OF CURB UNLESS OTHERWISE NOTED.
2. FINISHED GRADES ARE SHOWN AT BASE OF CURB UNLESS OTHERWISE NOTED.
3. PROVIDE 50mm SCH 80 PVC PIPE OPENINGS AT THE BASE OF CURB, INVERT OF PIPE FLUSH WITH SIDEWALK. OPENINGS ARE TO BE LOCATED EVERY 5m (SEE DETAIL C-05.1).
4. LOCATE A 50mm PVC PIPE THROUGH THE CURB AT ALL LOW POINTS.

SCALE 1:300
UNLESS OTHERWISE NOTED, LINEAR DIMENSIONS SHOWN ARE IN MILLIMETERS.

ADDENDUM 2 SUBMITTAL

This project was made possible by the United States Agency for International Development and the generous support of the American People through USAID Global Architecture and Engineering IQC Contracts.

SYMB	DESCRIPTION	DATE	APR
4	MOD. GRADES FOR LOWER LINKWAY SIDEWALK	12/22/10	BRG
3	SIDEWALK MODS FOR NEW ADMIN BUILDING	11/01/10	BRG
2	BID DOCUMENT SUBMITTAL	09/09/10	BRG
1	REVISED DRAINAGE PLAN	09/09/10	BRG
	100% DESIGN SUBMITTAL	07/06/10	BRG
	95% DESIGN SUBMITTAL	06/03/10	NJB

DESIGNED BY: JLH
DATE: 12/22/2010
DWN BY: JLH
SUBMITTED BY: TETRA TECH
CHK BY: BRG
FILE NO.: LT0005-C-04

USAID FROM THE AMERICAN PEOPLE

A E S P

USAID - OIEE
GHAZI BOYS HIGH SCHOOL
GRADING AND DRAINAGE PLAN
SHEET 6 OF 6

SHEET REFERENCE NUMBER:
LT0005 C-04.6

P:\1298\Work Orders\WO-LT\WO-LT-0005 GBHS Utility Design\CAD\Conceptual\Civil\DWG\LT0005-C-04\02-Civil\LT0005-C-04.dwg 12/21/2010 3:22:04 PM Harris, Jessica

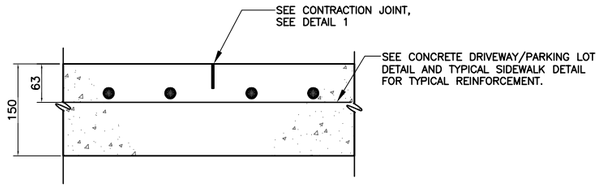

CONTRACTION JOINT DETAIL
N.T.S.

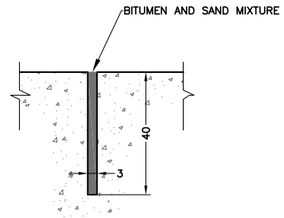

DETAIL 1 – CONTRACTION JOINT DETAIL
N.T.S.

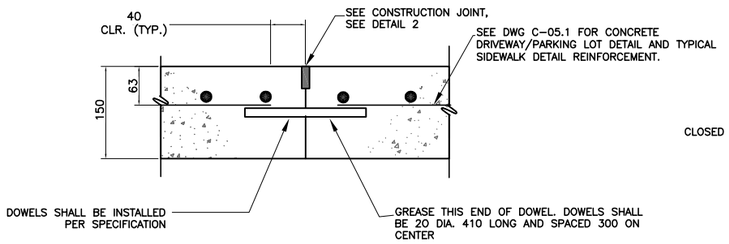

CONSTRUCTION JOINT DETAIL
N.T.S.

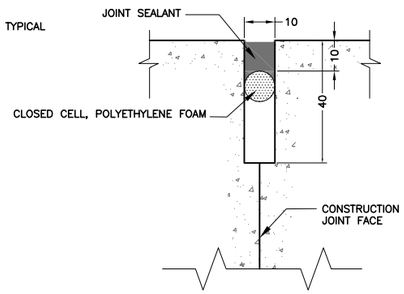

DETAIL 2 – CONSTRUCTION JOINT DETAIL
N.T.S.

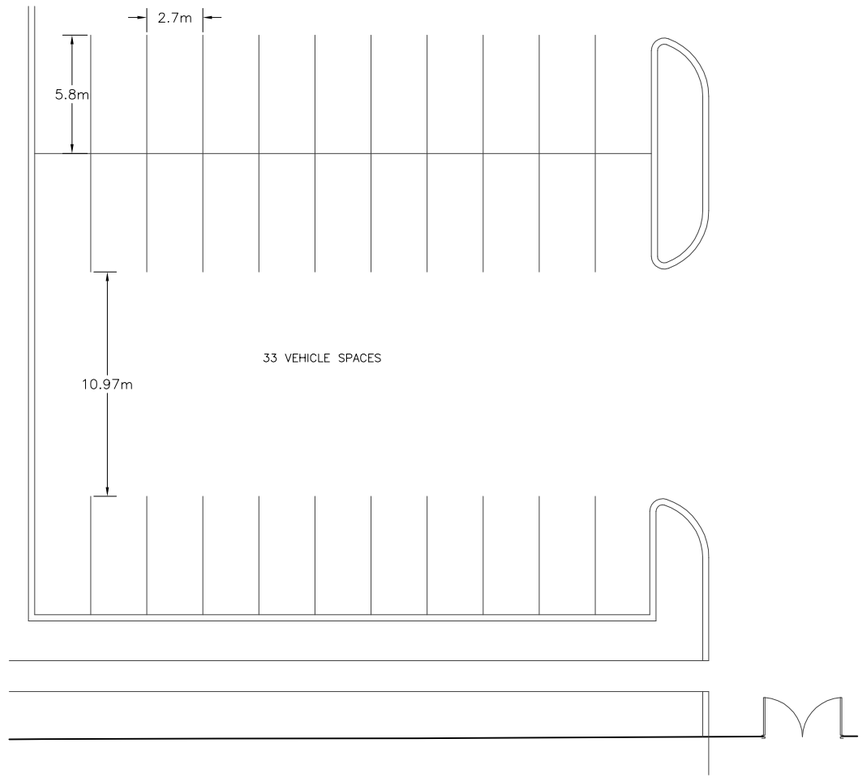

PARKING LAYOUT
SCALE 1:300

UNLESS OTHERWISE NOTED, LINEAR DIMENSIONS SHOWN ARE IN MILLIMETERS.

ADDENDUM 2 SUBMITTAL

This project was made possible by the United States Agency for International Development and the generous support of the American People through USAID Global Architecture and Engineering IQC Contracts.

SYMB	DESCRIPTION	DATE	APR
A	MODIFIED CONCRETE JOINT DETAILS	12/22/10	BRG
A	ADDED DETAIL SHEET FOR CONCRETE JOINTS	11/01/10	BRG

DESIGNED BY: RB
DATE: 12/22/10
DWN BY: ARC
SUBMITTED BY: TETRA TECH
CHK BY: KWC
FILE NO.: WOLT05-C-05.4

USAID FROM THE AMERICAN PEOPLE

A E S P

USAID – OIEE
GHAZI BOYS HIGH SCHOOL
SITE & GRADING DETAILS
SHEET 4 OF 4

SHEET REFERENCE NUMBER:
LT0005
C-05.4

P:\1298\Work Orders\WO-LT\WO-LT-0005 GBHS Utility Design\CAD\Conceptual\Civil\DWG\WOLT05-C-05.4.dwg 12/22/2010 6:31:07 PM Safai, Ahmad Shekib

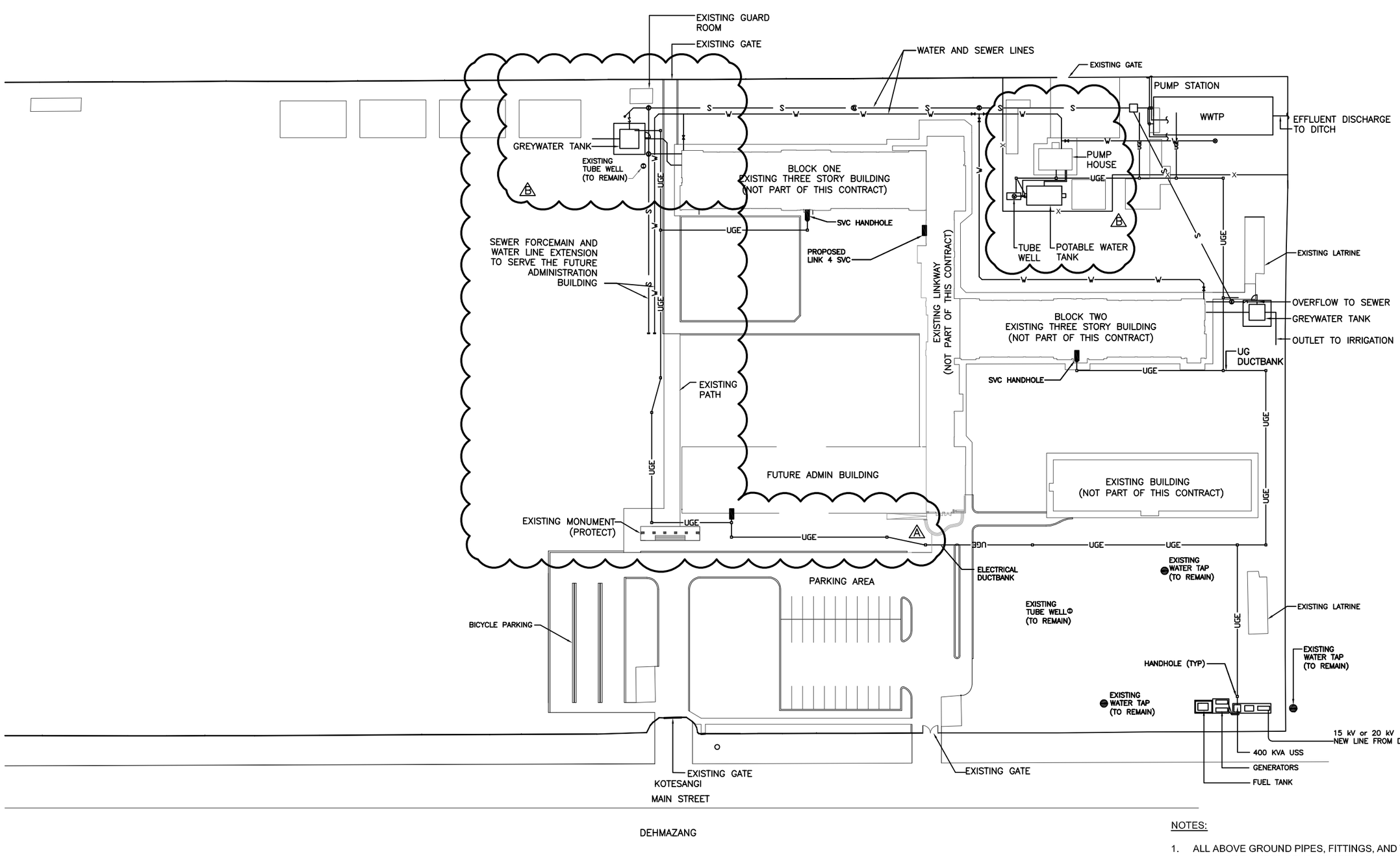

NOTES:

1. ALL ABOVE GROUND PIPES, FITTINGS, AND VALVES SHALL BE PAINTED CPVC OR STEEL PIPE UNLESS OTHERWISE NOTED.

0 25 50
1:1000

SCALE 1:1000
UNLESS OTHERWISE NOTED, LINEAR DIMENSIONS SHOWN ARE IN MILLIMETERS.

ADDENDUM 2 SUBMITTAL

SYMB	DESCRIPTION	DATE	APR
4	MOVED NEW FACILITIES TO MISS EXISTING STRUCTURES	12/22/10	BRG
3	SEWER & WATER FOR ADMIN BLDG CONNECTION	11/01/10	BRG
	BID DOCUMENT SUBMITTAL	09/09/10	BRG
	100% DESIGN SUBMITTAL	07/06/10	BRG
	95% DESIGN SUBMITTAL	06/03/10	NJB

This project was made possible by the United States Agency for International Development and the generous support of the American People through USAID Global Architecture and Engineering IQC Contracts.

DESIGNED BY: JLH
DWN BY: JLH
CHK BY: BRG
DATE: 12/22/2010
SUBMITTED BY: TETRA TECH
FILE NO.: LT0005-C-06

USAID FROM THE AMERICAN PEOPLE

A E S P

USAID – OIEE
GHAZI BOYS HIGH SCHOOL
COMBINED SITE INFRASTRUCTURE PLAN FOR UTILITIES

SHEET REFERENCE NUMBER:
LT0005 C–06

P:\1298\Work Orders\WO-LT\WO-LT-0005 GBHS Utility Design\CAD\Conceptual\Civil\DWG\WOLT05-C-006.dwg 12/21/2010 3:23:25 PM Harris, Jessica

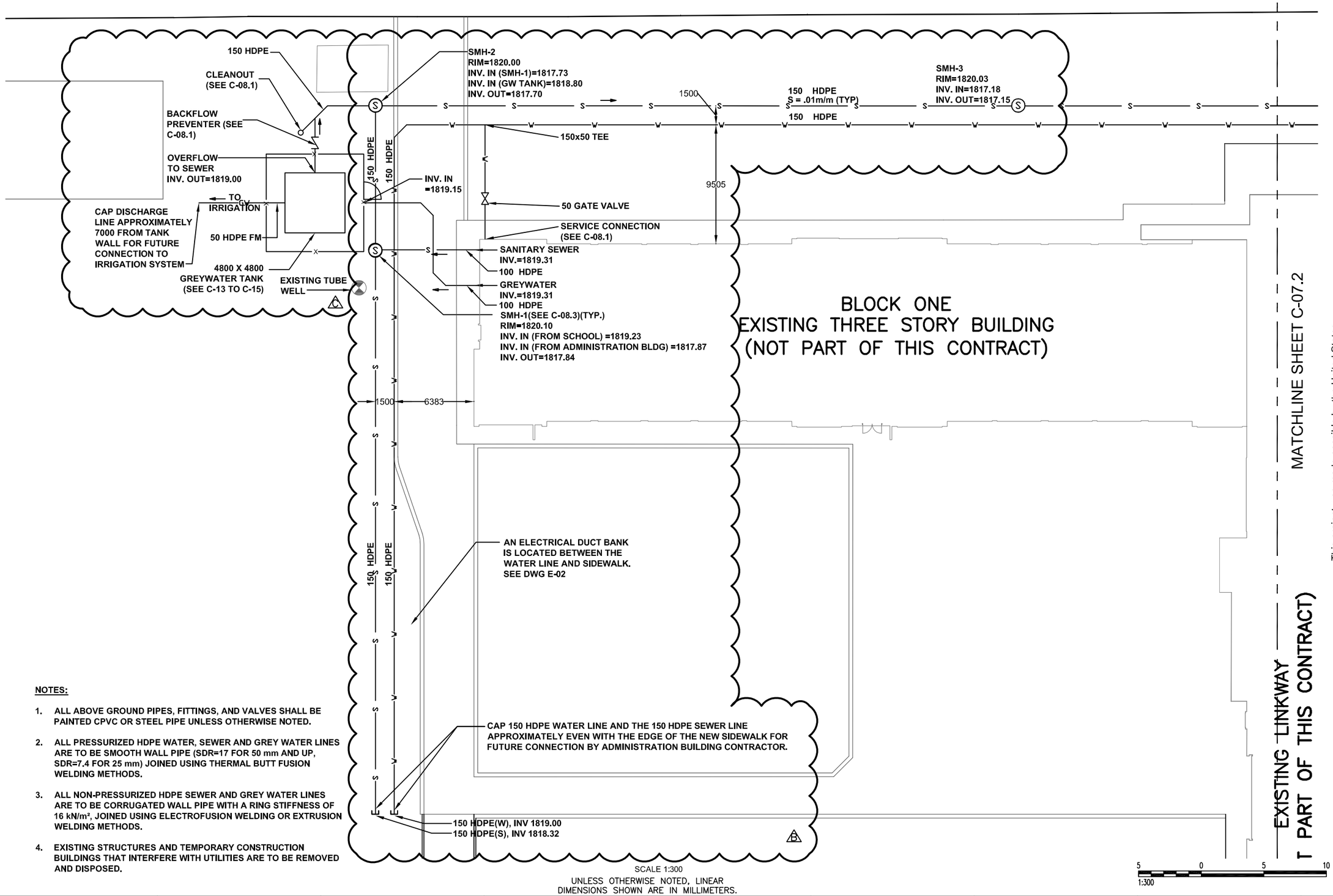

NOTES:

1. ALL ABOVE GROUND PIPES, FITTINGS, AND VALVES SHALL BE PAINTED CPVC OR STEEL PIPE UNLESS OTHERWISE NOTED.
2. ALL PRESSURIZED HDPE WATER, SEWER AND GREY WATER LINES ARE TO BE SMOOTH WALL PIPE (SDR=17 FOR 50 mm AND UP, SDR=7.4 FOR 25 mm) JOINED USING THERMAL BUTT FUSION WELDING METHODS.
3. ALL NON-PRESSURIZED HDPE SEWER AND GREY WATER LINES ARE TO BE CORRUGATED WALL PIPE WITH A RING STIFFNESS OF 16 kN/m², JOINED USING ELECTROFUSION WELDING OR EXTRUSION WELDING METHODS.
4. EXISTING STRUCTURES AND TEMPORARY CONSTRUCTION BUILDINGS THAT INTERFERE WITH UTILITIES ARE TO BE REMOVED AND DISPOSED.

SCALE 1:300

UNLESS OTHERWISE NOTED, LINEAR DIMENSIONS SHOWN ARE IN MILLIMETERS.

ADDENDUM 2 SUBMITTAL

SYMB	DESCRIPTION	DATE	APR
4	MOVED GW TANK TO MISS EXISTING WELL	12/22/10	BRG
3	SEWER & WATER FOR ADMIN. BLDG. CONN.	11/01/10	BRG
2	BID DOCUMENT SUBMITTAL	09/09/10	BRG
	100% DESIGN SUBMITTAL	07/06/10	BRG
	95% DESIGN SUBMITTAL	06/03/10	NJB

This project was made possible by the United States Agency for International Development and the generous support of the American People through USAID Global Architecture and Engineering IQC Contracts.

DESIGNED BY: JLH | DATE: 12/22/2010
DWN BY: JLH | SUBMITTED BY: TETRA TECH
CHK BY: BRG | FILE NO.: LT0005-C-07

USAID FROM THE AMERICAN PEOPLE

A E S P

USAID – OIEE
GHAZI BOYS HIGH SCHOOL
WATER AND SEWER UTILITY PLAN
SHEET 1 OF 2

SHEET REFERENCE NUMBER:
LT0005
C-07.1

P:\1298\Work Orders\WO-LT\WO-LT-0005 GBHS Utility Design\CAD\Conceptual\Civil\DWG\WOLT05-C-007.1 to 007.2.dwg 12/22/2010 4:01:37 PM Safai, Ahmad Shekib

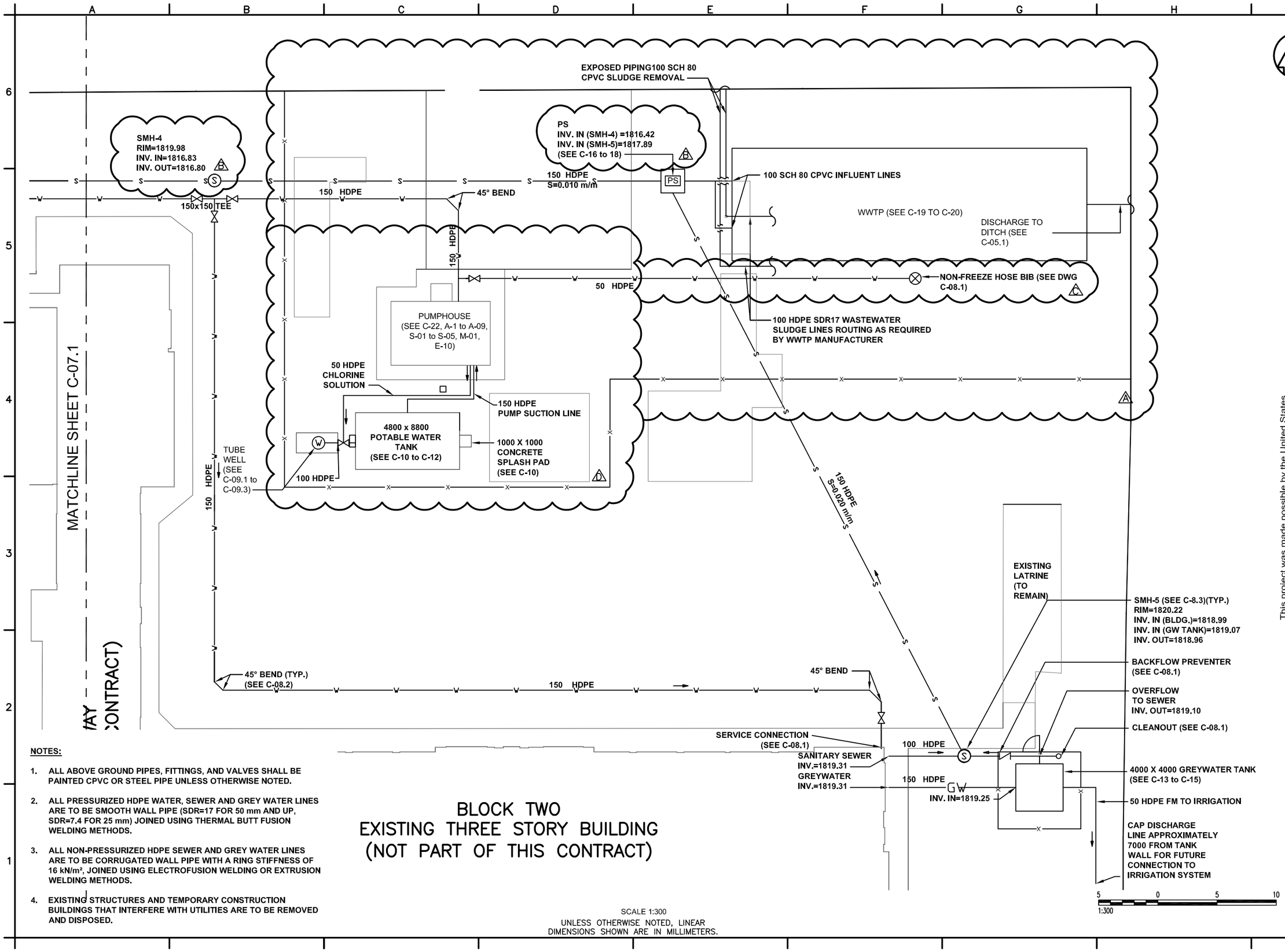

NOTES:

1. ALL ABOVE GROUND PIPES, FITTINGS, AND VALVES SHALL BE PAINTED CPVC OR STEEL PIPE UNLESS OTHERWISE NOTED.
2. ALL PRESSURIZED HDPE WATER, SEWER AND GREY WATER LINES ARE TO BE SMOOTH WALL PIPE (SDR=17 FOR 50 mm AND UP, SDR=7.4 FOR 25 mm) JOINED USING THERMAL BUTT FUSION WELDING METHODS.
3. ALL NON-PRESSURIZED HDPE SEWER AND GREY WATER LINES ARE TO BE CORRUGATED WALL PIPE WITH A RING STIFFNESS OF 16 kN/m², JOINED USING ELECTROFUSION WELDING OR EXTRUSION WELDING METHODS.
4. EXISTING STRUCTURES AND TEMPORARY CONSTRUCTION BUILDINGS THAT INTERFERE WITH UTILITIES ARE TO BE REMOVED AND DISPOSED.

SCALE 1:300
UNLESS OTHERWISE NOTED, LINEAR
DIMENSIONS SHOWN ARE IN MILLIMETERS.

ADDENDUM 2 SUBMITTAL

SYMB	DESCRIPTION	DATE	APR
4	MOVED WATER RESERVOIR AND PUMP HOUSE	12/22/10	BRG
3	ADDED NON-FREEZE HOSE BIB	11/01/10	BRG
2	DEEPENING SEWER FOR ADMIN. BLDG. CONN.	11/01/10	BRG
1	BID DOCUMENT SUBMITTAL	09/09/10	BRG
	MISCELLANEOUS SITE PLAN MODIFICATIONS	09/09/10	BRG
	100% DESIGN SUBMITTAL	07/06/10	BRG
	95% DESIGN SUBMITTAL	06/03/10	NJB

This project was made possible by the United States Agency for International Development and the generous support of the American People through USAID Global Architecture and Engineering IQC Contracts.

DESIGNED BY: JLH | DATE: 12/22/2010
DWN BY: JLH | SUBMITTED BY: TETRA TECH
CHK BY: BRG | FILE NO.: LT0005-C-07

USAID FROM THE AMERICAN PEOPLE

A E S P

USAID – OIEE
GHAZI BOYS HIGH SCHOOL
WATER AND SEWER UTILITY PLAN
SHEET 2 OF 2

SHEET REFERENCE NUMBER:
LT0005
C-07.2

P:\1298\Work Orders\WO-LT\WO-LT-0005 GBHS Utility Design\CAD\Conceptual\Civil\DWG\WOLT05-C-007.1 to 007.2.dwg 12/21/2010 3:46:56 PM Harris, Jessica

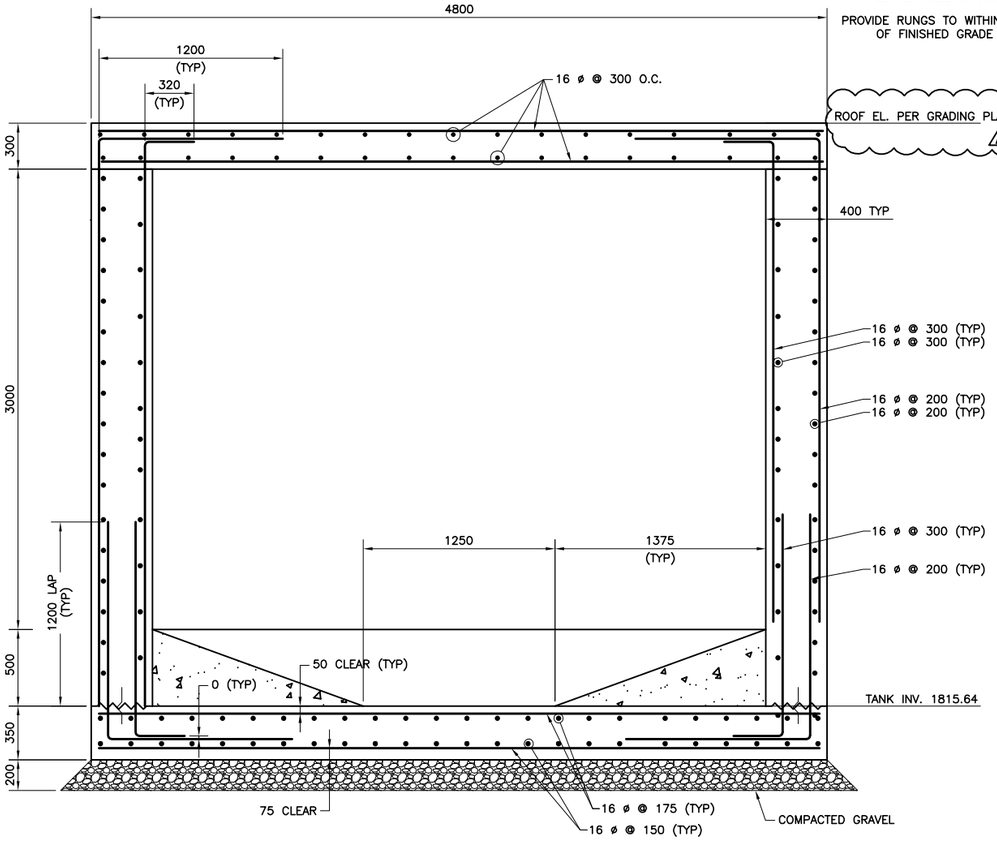

GREYWATER TANK SECTION
SCALE 1:40
D
C-13 | C-14

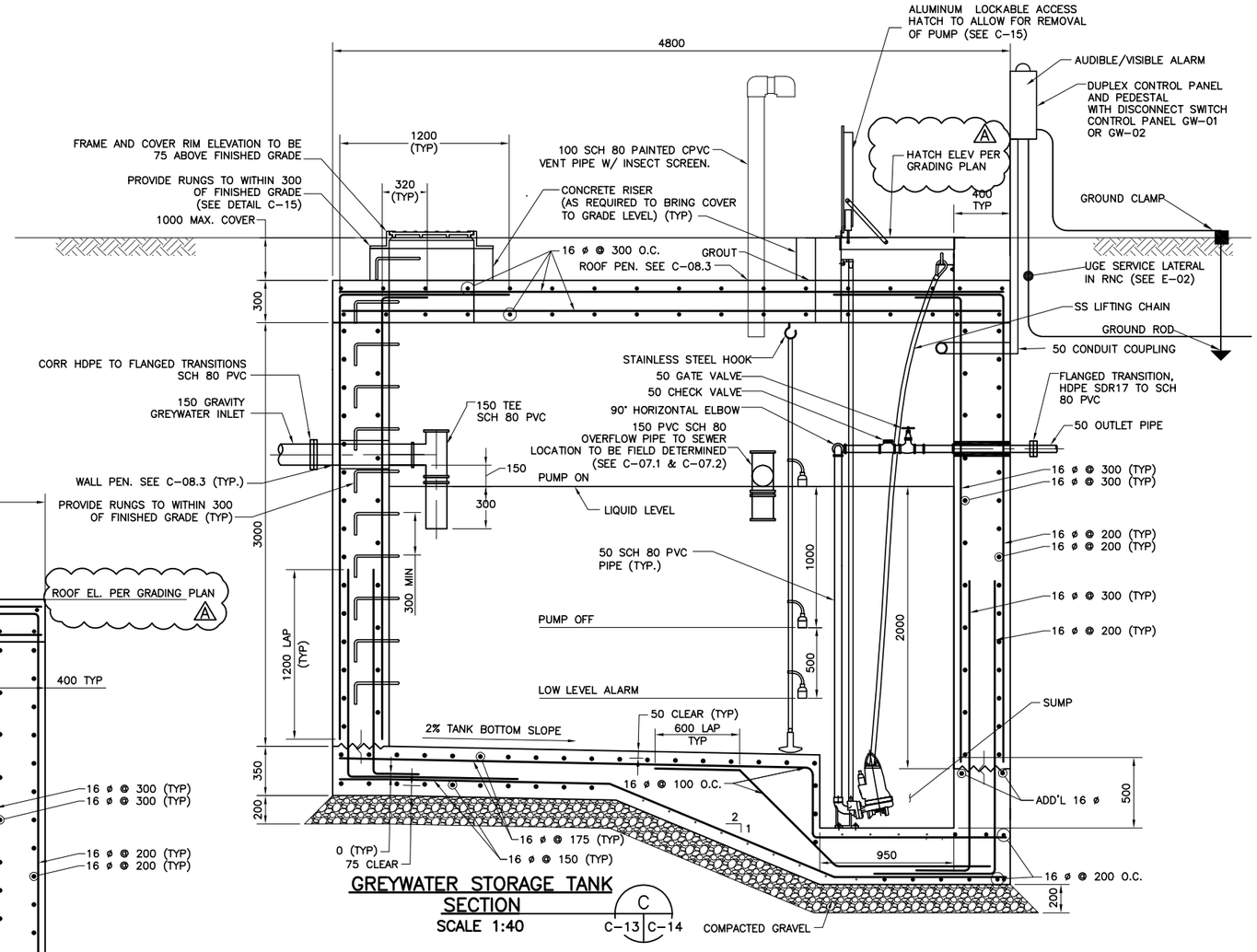

GREYWATER STORAGE TANK SECTION
SCALE 1:40
C
C-13 | C-14

GREYWATER PUMP SCHEDULE

NO. REQ.D	TYPE	RATING POINT			MIN. DISCH SIZE	TYPE SEAL	MOTOR						DRIVE TYPE
		CAP. l/s (GPM)	MIN. HEAD m (FT.)	MIN. EFF.			VOLTAGE	PHASE	WIRE	HZ	HP	ENCL	
2	GRINDER	2.35 (37.25)	14.6 (47.9)	30%	40mm	TANDEM MECH.	380	3	3	50	3	X PROOF	DIRECT

NOTE: SEE C-07.1 & C-07.2 FOR INLET, OUTLET FORCE MAIN, AND OVERFLOW INVERTS

UNLESS OTHERWISE NOTED, LINEAR DIMENSIONS SHOWN ARE IN MILLIMETERS.

ADDENDUM 2 SUBMITTAL

4	MISCELLANEOUS TANK MODS	12/22/10	BRG
3	BID DOCUMENT SUBMITTAL	09/09/10	BRG
2	100% DESIGN SUBMITTAL	07/06/10	
1	95% DESIGN SUBMITTAL	05/28/10	APR
	SUBMITTAL/REVISION DESCRIPTION	DATE	

SYMB

This project was made possible by the United States Agency for International Development and the generous support of the American People through USAID Global Architecture and Engineering IQC Contracts.

DESIGNED BY: JZ
DATE: 12/22/10
DRAWN BY: AC
SUBMITTED BY: TETRA TECH
CHECKED BY: APL
CAD FILE NAME: WOLT05-C-014

USAID FROM THE AMERICAN PEOPLE

AESP

USAID – OIEE
GHAZI BOYS HIGH SCHOOL (GBHS)

GREYWATER TANK SECTIONS

SHEET REFERENCE NUMBER:
C-14

P:\1298\Work Orders\WO-LT\WO-LT-0005 GBHS Utility Design\CAD\Conceptual\Civil\DWG\WOLT05-C-014.dwg 12/22/2010 6:14:22 PM Safai, Ahmad Shekib

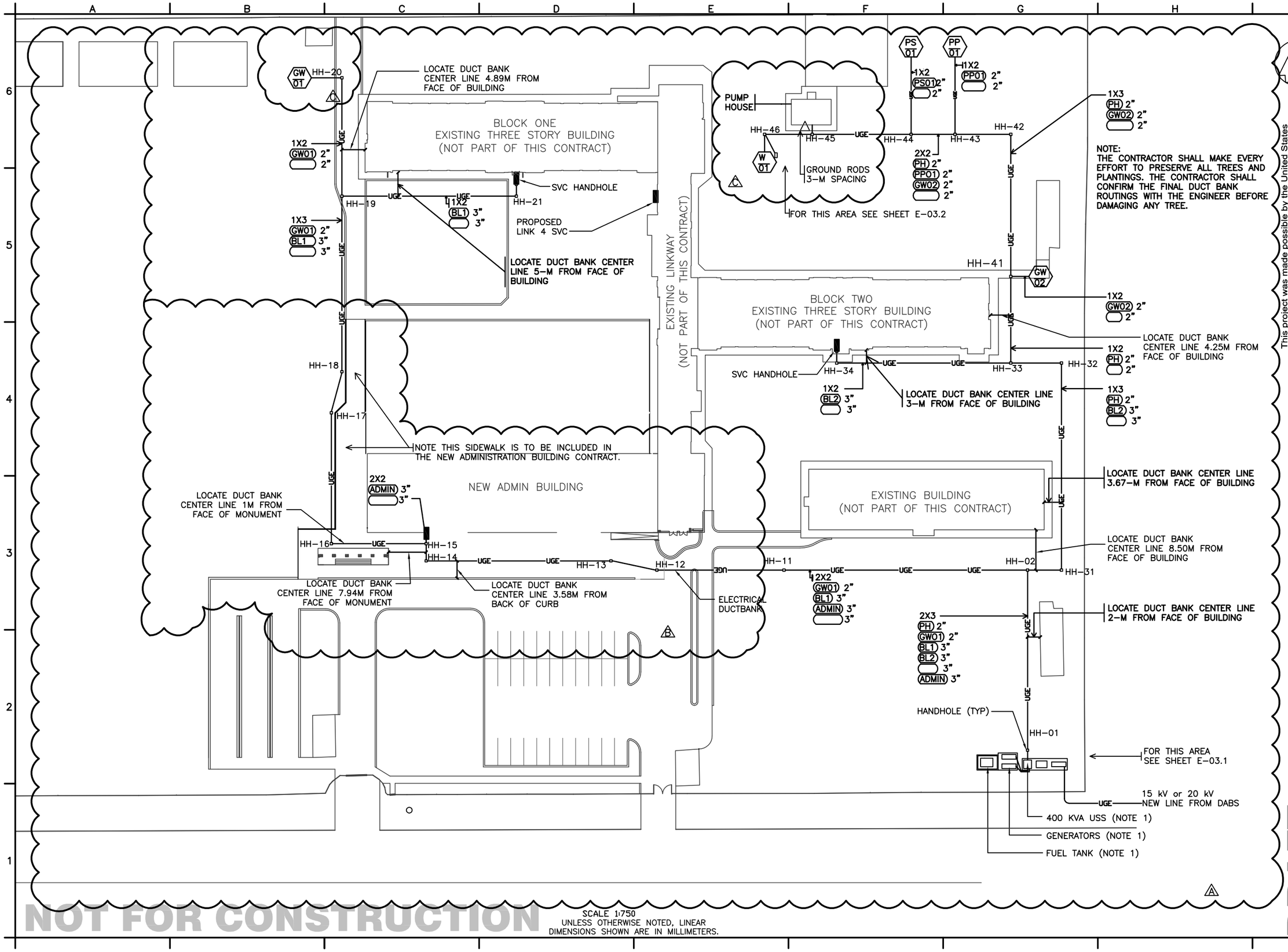

NOT FOR CONSTRUCTION

SCALE 1:750
UNLESS OTHERWISE NOTED, LINEAR DIMENSIONS SHOWN ARE IN MILLIMETERS.

DRAFT 12/22/2010 6:30 PM

ADDENDUM 2 SUBMITTAL

4	NEW DUCTBANK LAYOUT FOR RELOCATED FAC.	12/22/10	BRG
3	REVISED ELEC. ROUTING NEAR ADMIN BLDG	11/01/10	BRG
2	BID DOCUMENT SUBMITTAL	09/09/10	BRG
	ADDED CONDUIT DESIGNATIONS TO DUCT BANK	09/09/10	BRG
	95% DESIGN SUBMITTAL	06/03/10	NJB
SYMB	DESCRIPTION	DATE	APR

This project was made possible by the United States Agency for International Development and the generous support of the American People through USAID Global Architecture and Engineering IQC Contracts.

DESIGNED BY: MAL
DATE: 12/22/2010
DWN BY: EWK
SUBMITTED BY: TETRA TECH
CHK BY: BRG
FILE NO.: LT0005-E-02

USAID FROM THE AMERICAN PEOPLE

AESP

USAID – OIEE
GHAZI BOYS HIGH SCHOOL
ELECTRICAL SITE PLAN

SHEET REFERENCE NUMBER:
LT0005
E-02

P:\1298\Work Orders\WO-LT\WO-LT-0005 GBHS Utility Design\CAD\Conceptual\Electrical\DWG\WOLT05_E-002.dwg 12/22/2010 6:30:15 PM Safai, Ahmad Shekib

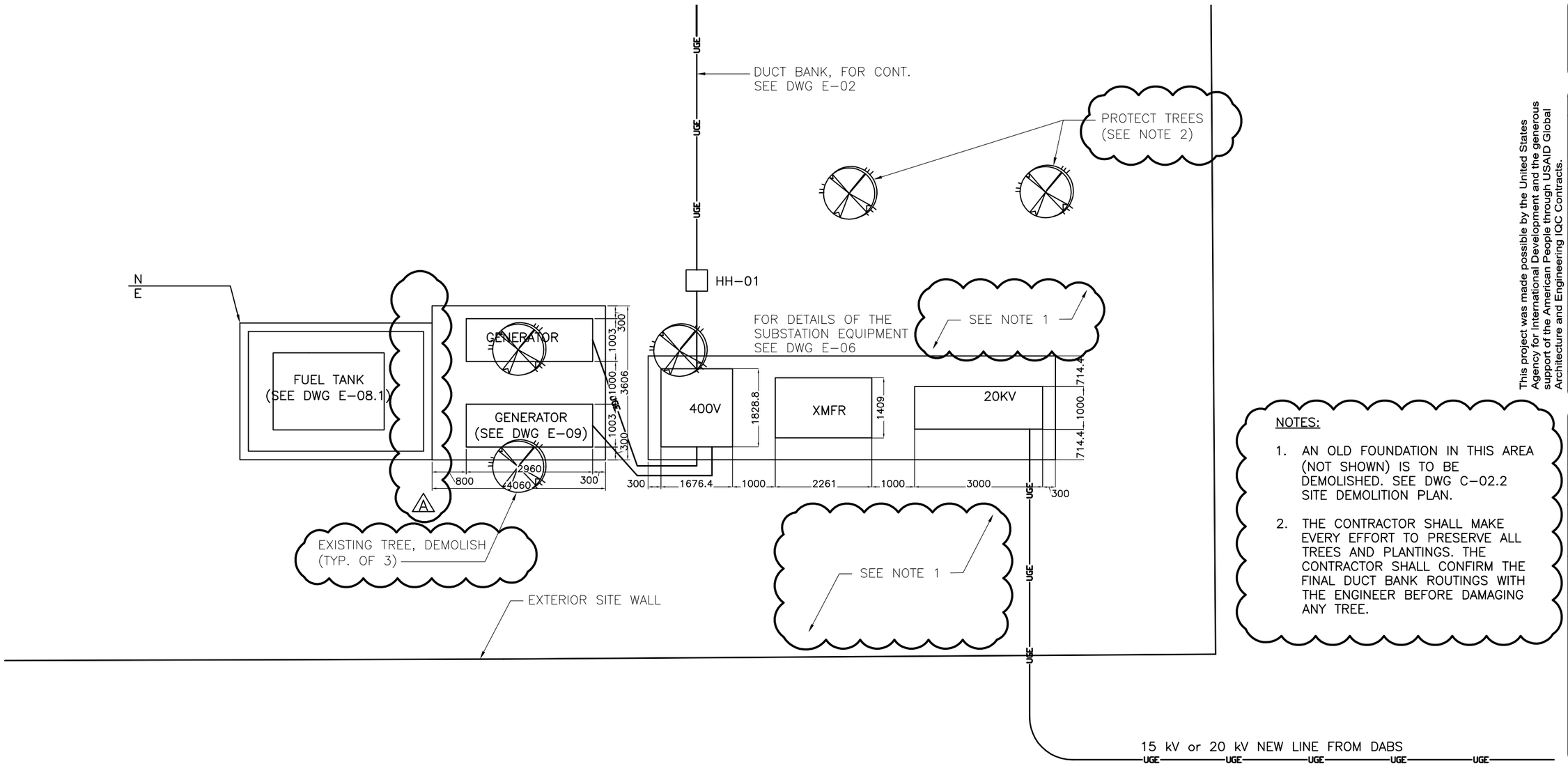

NOTES:

1. AN OLD FOUNDATION IN THIS AREA (NOT SHOWN) IS TO BE DEMOLISHED. SEE DWG C-02.2 SITE DEMOLITION PLAN.
2. THE CONTRACTOR SHALL MAKE EVERY EFFORT TO PRESERVE ALL TREES AND PLANTINGS. THE CONTRACTOR SHALL CONFIRM THE FINAL DUCT BANK ROUTINGS WITH THE ENGINEER BEFORE DAMAGING ANY TREE.

SCALE 1:100
UNLESS OTHERWISE NOTED, LINEAR DIMENSIONS SHOWN ARE IN MILLIMETERS.

1 0 1 2 3 4 5 6 7 8 9
1:100

ADDENDUM 2 SUBMITTAL

This project was made possible by the United States Agency for International Development and the generous support of the American People through USAID Global Architecture and Engineering IQC Contracts.

SYMB	DESCRIPTION	DATE	APR
4	EXTENDED GENERATOR AND FUEL TANK PADS	12/22/10	BRG
	BID DOCUMENT SUBMITTAL	09/09/10	BRG
	CLARIFIED DEMOLITION AND TREE PROTECTION	09/09/10	BRG
	100% DESIGN SUBMITTAL	07/06/10	BRG
	95% DESIGN SUBMITTAL	06/03/10	NJB

DESIGNED BY: MAL
DATE: 12/22/2010
DWN BY: EWK
SUBMITTED BY: TETRA TECH
CHK BY: BRG
FILE NO.: LT0005-E-03

USAID FROM THE AMERICAN PEOPLE

A E S P

USAID - OIEE
GHAZI BOYS HIGH SCHOOL
ENLARGED ELECTRICAL SITE PLAN
1 OF 2

SHEET REFERENCE NUMBER:
LT0005
E-03.1

P:\1298\Work Orders\WO-LT\WO-LT-0005 GBHS Utility Design\CAD\Conceptual\Electrical\DWG\WOLT05_E-003.1.dwg 12/21/2010 4:02:57 PM Harris, Jessica

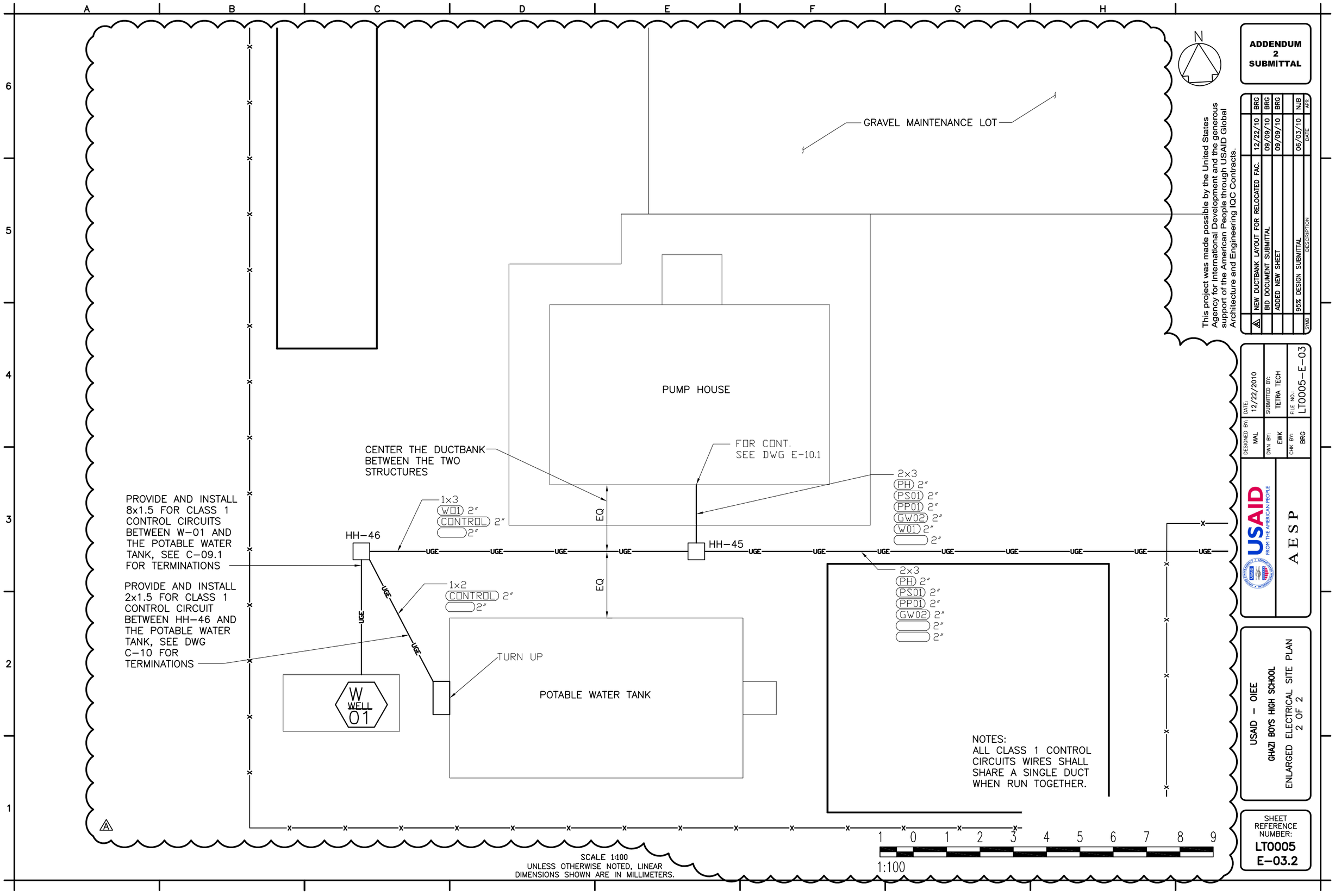

ADDENDUM 2 SUBMITTAL

This project was made possible by the United States Agency for International Development and the generous support of the American People through USAID Global Architecture and Engineering IQC Contracts.

SYMB	DESCRIPTION	DATE	APR
2	NEW DUCTBANK LAYOUT FOR RELOCATED FAC.	12/22/10	BRG
	BID DOCUMENT SUBMITTAL	09/09/10	BRG
	ADDED NEW SHEET	09/09/10	BRG
	95% DESIGN SUBMITTAL	06/03/10	NJB

DESIGNED BY: MAL
DATE: 12/22/2010
DWN BY: EWK
SUBMITTED BY: TETRA TECH
CHK BY: BRG
FILE NO.: LT0005-E-03

USAID FROM THE AMERICAN PEOPLE

A E S P

USAID – OIEE
GHAZI BOYS HIGH SCHOOL
ENLARGED ELECTRICAL SITE PLAN
2 OF 2

SHEET REFERENCE NUMBER:
LT0005 E-03.2

P:\1298\Work Orders\W0-LT\W0-LT-0005 GBHS Utility Design\CAD\Conceptual\Electrical\DWG\W0LT05_E-003.2.dwg 12/22/2010 6:29:43 PM Safai, Ahmad Shekib

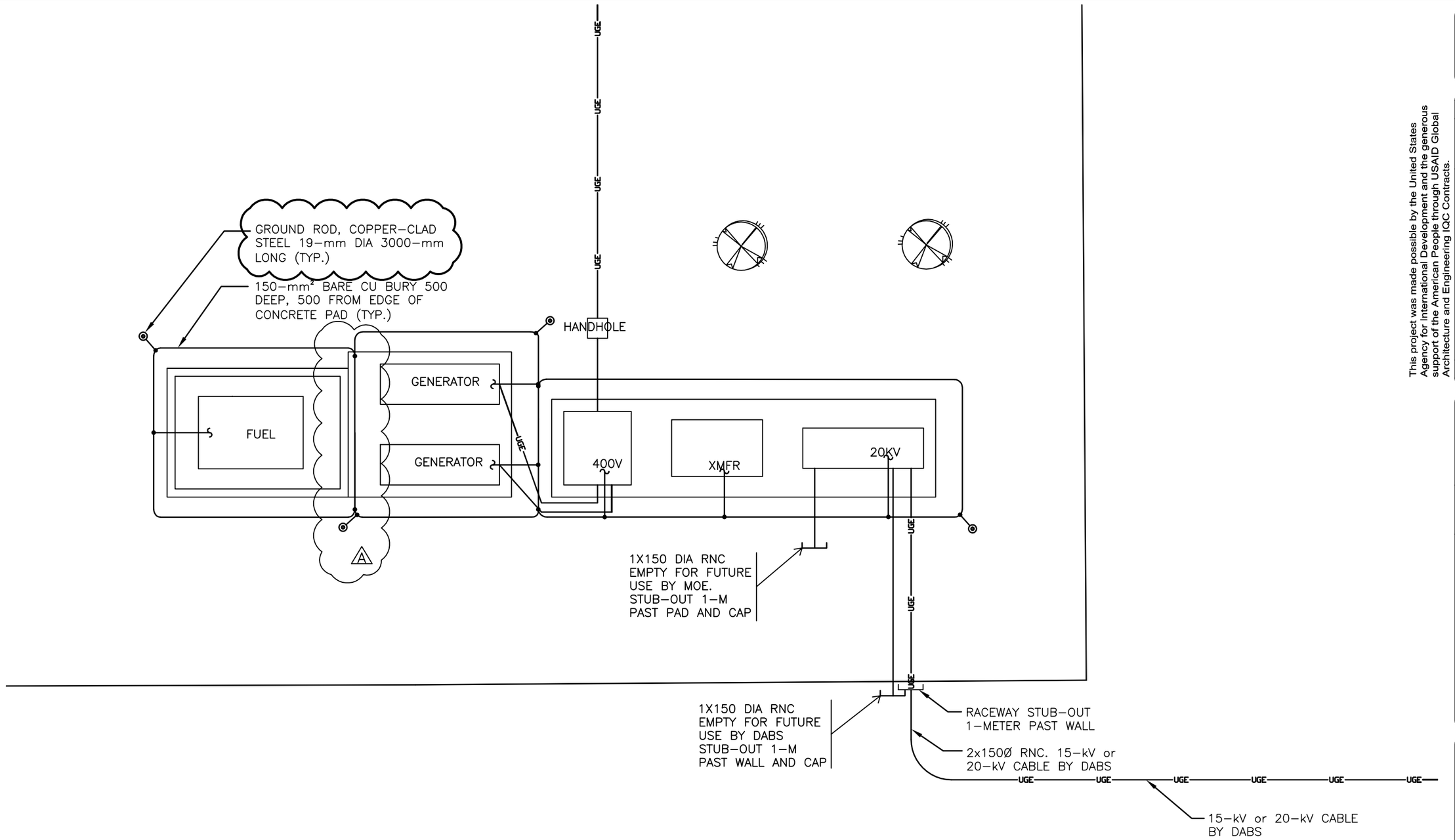

SCALE 1:100

UNLESS OTHERWISE NOTED, LINEAR DIMENSIONS SHOWN ARE IN MILLIMETERS.

1 0 1 2 3 4 5 6 7 8 9

1:100

ADDENDUM 2 SUBMITTAL

This project was made possible by the United States Agency for International Development and the generous support of the American People through USAID Global Architecture and Engineering IQC Contracts.

SYMB	DESCRIPTION	DATE	APR
4	EXTENDED GENERATOR AND FUEL TANK PADS	12/22/10	BRG
	BID DOCUMENT SUBMITTAL	09/09/10	BRG
	100% DESIGN SUBMITTAL	07/06/10	BRG
	95% DESIGN SUBMITTAL	06/03/10	NJB

DESIGNED BY: MAL
DATE: 12/22/2010
DWN BY: EWK
SUBMITTED BY: TETRA TECH
CHK BY: BRG
FILE NO.: LT0005-E-04

USAID FROM THE AMERICAN PEOPLE

A E S P

USAID - OIEE
GHAZI BOYS HIGH SCHOOL
ENLARGED
ELECTRICAL GROUNDING PLAN

SHEET REFERENCE NUMBER:
LT0005 E-04

P:\1298\Work Orders\WO-LT\WO-LT-0005 GBHS Utility Design\CAD\Conceptual\Electrical\DWG\WOLT05_E-004.dwg 12/21/2010 4:18:14 PM Harris, Jessica

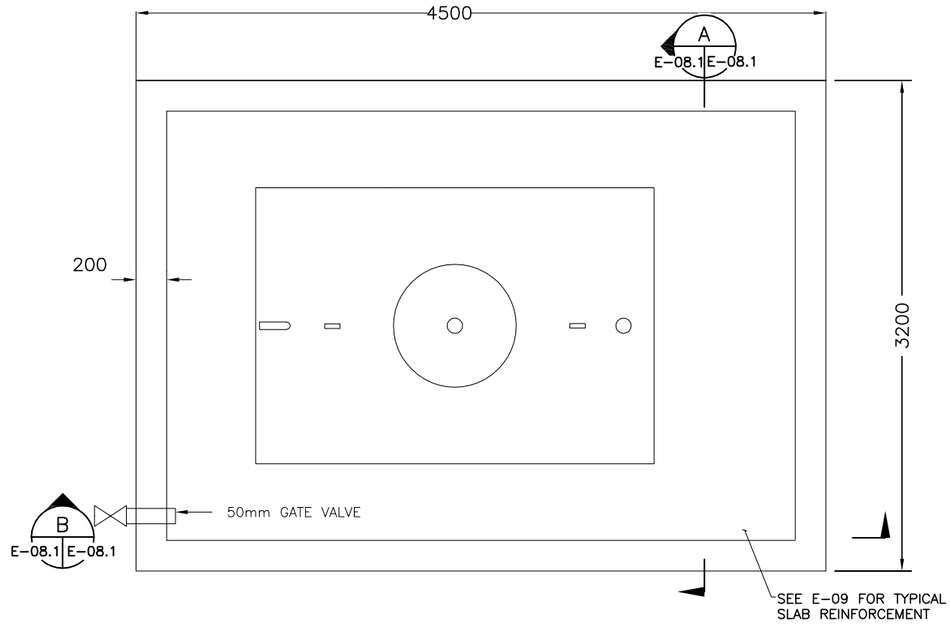

5,000 L FUEL TANK
1:40

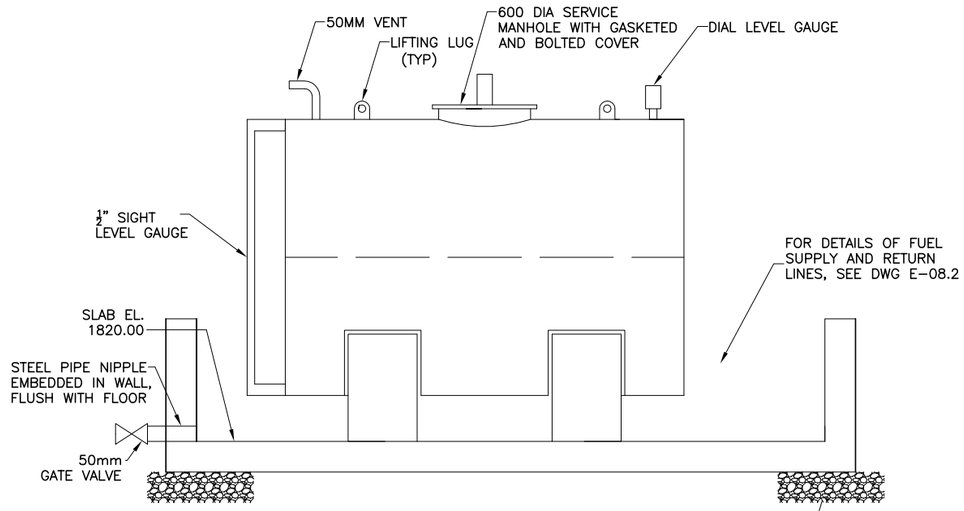

SECTION B
1:40
E-08.1 E-08.1

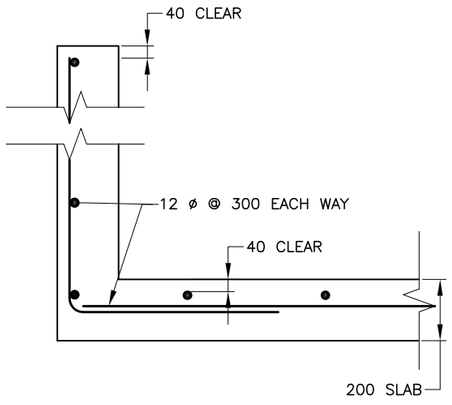

CONTAINMENT CORNER
REINFORCEMENT DETAIL
N.T.S

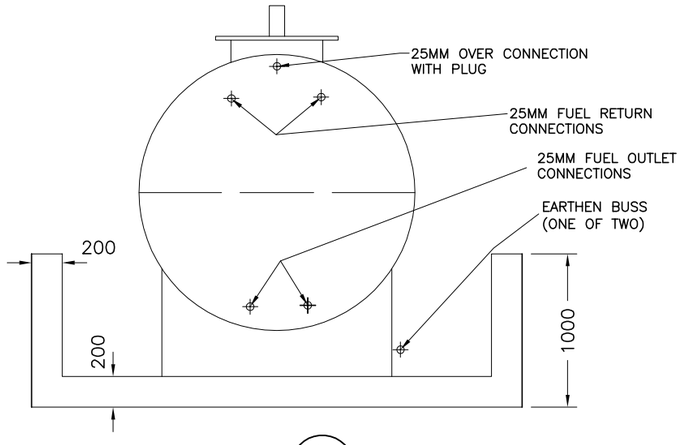

SECTION A
1:40
E-08.1 E-08.1

1 .50 0 1
1:40

UNLESS OTHERWISE NOTED, LINEAR
DIMENSIONS SHOWN ARE IN MILLIMETERS.

ADDENDUM 2 SUBMITTAL

SYMB	DESCRIPTION	DATE	APR
4	LENGTHENED FUEL TANK ENCLOSURE	12/22/10	BRG
	BID DOCUMENT SUBMITTAL	09/09/10	BRG
	100% DESIGN SUBMITTAL	07/06/10	BRG
	95% DESIGN SUBMITTAL	06/03/10	NJB

This project was made possible by the United States Agency for International Development and the generous support of the American People through USAID Global Architecture and Engineering IQC Contracts.

DESIGNED BY: MAL
DATE: 12/22/2010
DWN BY: EWK
SUBMITTED BY: TETRA TECH
CHK BY: BRG
FILE NO.: LT0005-E-08.1

USAID FROM THE AMERICAN PEOPLE
AESP

USAID – OIEE
GHAZI BOYS HIGH SCHOOL
ELECTRICAL DETAILS
FUEL OIL TANK

SHEET REFERENCE NUMBER:
LT0005
E-08.1

P:\1298\Work Orders\WO-LT\WO-LT-0005 GBHS Utility Design\CAD\Conceptual\Electrical\DWG\WOLT05_E-008.1, E-009.dwg 12/21/2010 4:20:42 PM Harris, Jessica

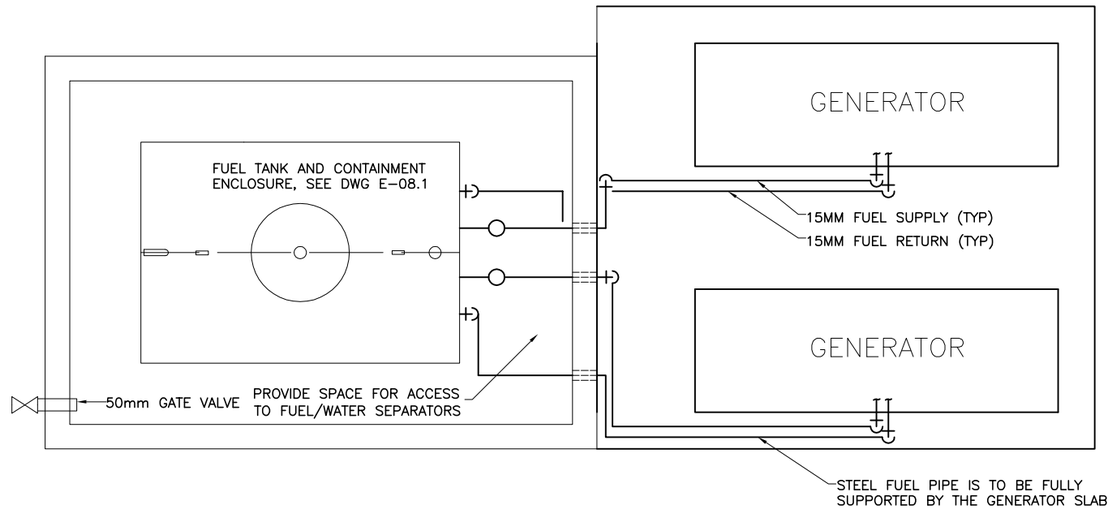

FUEL SYSTEM PLAN
1:50

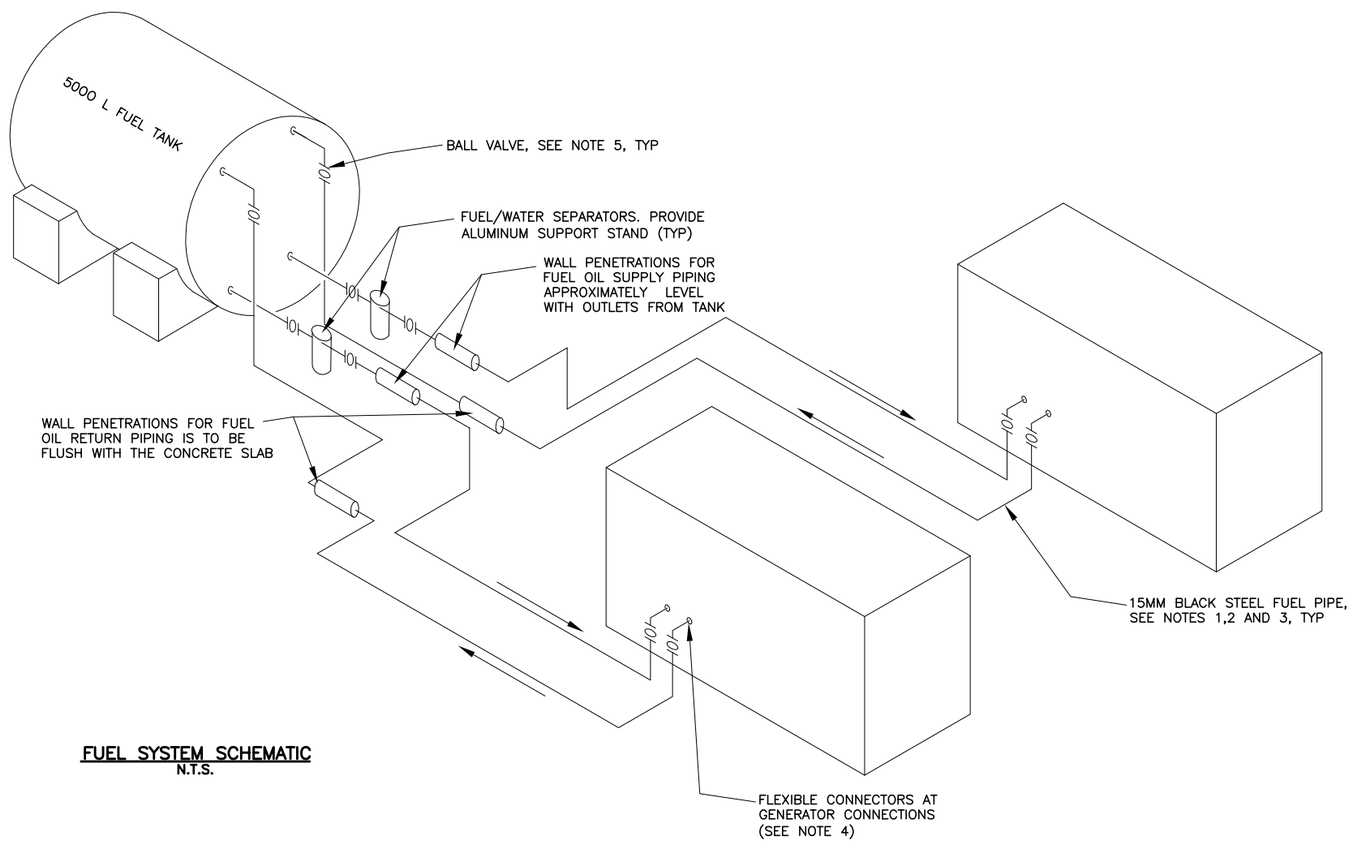

FUEL SYSTEM SCHEMATIC
N.T.S.

NOTES:

1. FUEL PIPE IS TO BE BLACK STEEL, SCHEDULE 40, TYPE E OR S, GRADE B (ASTM A53). ALL JOINTS TO BE BUTT WELDED.
2. WROUGHT-STEEL WELDING FITTINGS PER ASTM A243
3. MALLEABLE-IRON THREADED FITTINGS PER ASME B16.3, CLASS 150.
4. FLEXIBLE CONNECTORS ARE TO BE USED AT THE GENERATOR CONNECTIONS, THE CONNECTORS ARE TO BE IN ACCORDANCE WITH UL 567.
5. MANUAL FUEL-OIL SHUT OFF VALVES SHALL COMPLY WITH UL 842. PRESSURE RATING 860 KPA. PROVIDE LOCKING FEATURE ON ALL VALVES.

UNLESS OTHERWISE NOTED, LINEAR DIMENSIONS SHOWN ARE IN MILLIMETERS.

ADDENDUM 2 SUBMITTAL

This project was made possible by the United States Agency for International Development and the generous support of the American People through USAID Global Architecture and Engineering IQC Contracts.

SYMB	DESCRIPTION	DATE	APR
1	NEW SHEET-FUEL SYSTEM	12/22/10	BRG

DESIGNED BY: MAL
DATE: 12/22/2010
DWN BY: EWK
SUBMITTED BY: TETRA TECH
CHK BY: BRG
FILE NO.: LT0005-E-08.2

USAID FROM THE AMERICAN PEOPLE

A E S P

USAID - OIEE
GHAZI BOYS HIGH SCHOOL
ELECTRICAL DETAILS
FUEL SYSTEM

SHEET REFERENCE NUMBER:
LT0005
E-08.2

P:\1298\Work Orders\WO-LT\WO-LT-0005 GBHS Utility Design\CAD\Conceptual\Electrical\DWG\WOLT05_E-008.2.dwg 12/21/2010 4:22:15 PM Harris, Jessica