USAID | PAKISTAN
FROM THE AMERICAN PEOPLE

REACTIVE POWER PLANNING AND DESIGN STUDY OF PESHAWAR ELECTRIC SUPPLY COMPANY (PESCO)

November 2013

The report has been written by Power Planners International (PPI) under a subcontract with Advanced Engineering Associates International (AEAI). The contents of this report are the sole responsibility of PPI and. and do not necessarily reflect the views of AEAI, USAID or the United States Government.

REACTIVE POWER PLANNING AND DESIGN STUDY OF PESHAWAR ELECTRIC SUPPLY COMPANY (PESCO)

Contract No: AID-EPP-I-00-03-00004
Order No: AID-391-TO-12-00002

©USAID Energy Policy Program
House 4, Street 88, Sector G-6/3
Ataturk Avenue, Islamabad, Pakistan
Tel: +92 (51) 835 7072, Fax: +92 (51) 835 7071
Email: rsmith@aeai.net

ADVANCED
ENGINEERING
ASSOCIATES
INTERNATIONAL
CONTRACTOR OF USAID PAKISTAN

DISCLAIMER

This report is made possible by the support of the American People through the United States Agency for International Development (USAID). The contents of this report are the sole responsibility of Advanced Engineering Associates International Inc. and do not necessarily reflect the views of USAID or the United States Government.

Contents

Acronyms i

Executive Summary ii

1. Introduction 1

2. Problems of Existing Approach of Capacitor Installations 3

2.1 No Optimum Sizing and Siting of Capacitor Banks 3

2.2 Violation of Step Voltage Change Criteria 3

2.3 No remedy for Inrush Current 4

2.4 No Remedy for Resonance at Odd-Harmonics 4

3. Evaluation of Power Factors at 11 kV Buses of Substations 5

4. Base Case Study with No Additional Capacitors till 2015 7

4.1 **Must-To-Meet** Criteria of Grid Code for Voltage Regulation 7

4.2 Normal Load Flow of Peak Load Conditions of 2015 7

4.3 Inadequacy of Existing Capacitors in PESCO: Poor Voltage Profile 8

5. Additional Capacitors Requirement for Peak Load of 2015 through Optimal Power Flow Analysis 10

5.1 What is Optimal Power Flow 10

5.2 Setting up PSSE OPF for PESCO RPC Study 11

5.3 Optimal Sizing and Siting of Capacitors for Normal Case 12

5.4 Additional Capacitors to Meet Contingency Conditions 13

5.5 Total Capacitors Needed in 2015 13

5.6 Additional Benefits Gained from Capacitor Installations in 2015 16

6. Additional Capacitors Requirement for Peak Load of 2018 17

7. Switched Shunt Capacitor Banks' Step Sizing 21

7.1 Step Sizing of Switched Shunt Capacitor Banks 21

7.2 Voltage Control with PLC Settings of Switched Capacitor Banks 21

8. Series Reactors to Overcome In-rush Current and Resonance at Odd Harmonics 23

8.1 Electrical Resonance 23

8.2 Avoiding Resonance 23

8.3 Capacitor Switching Transients 23
8.3.1 Solution to This Problem 24
8.4 Our Strategy to Tackle These Problems 24
8.4.1 Design of Detuning Reactors 24
8.5 Final Sizing of Reactors 25
9. Dynamic Reactive Power Compensation (DRC) 27
9.1 Purpose of DRC: Voltage Stability Issues 27
9.1.1 Slow Voltage Recovery and Voltage Collapse 27
9.1.2 Motor Stalling and Voltage Instability 28
9.2 Composition of Loads in PESCO 29
9.3 Assumptions in Dynamic Stability Analysis of PESCO System 31
9.4 Dynamic Stability Analysis of PESCO System with No SVC 31
9.5 Dynamic Stability Analysis of PESCO System with SVC of 250 MVAR at Shahibagh 35
9.6 Dynamic Stability Analysis of PESCO System with SVC of 250 MVAR at Shahibagh 132 kV and 250 MVAR at Kohat 132 kV 40
9.7 Dynamic Stability Analysis of PESCO System with SVC of 250 MVAR at Shahibagh 132 kV, 250 MVAR at Kohat 132 kV and 250 MVAR at Peshawar University 132 kV 42
9.8 Conceptual Design of the Proposed SVCs 43
9.9 Conclusion of Dynamic Stability Analysis 44
10. Conclusions 45
Appendices 47
Appendix A: Existing Load Power Factors at 11 kV Bus Bars of PESCO Substations
Appendix B: Voltage Profile with Existing Capacitors in Year 2015
B.1: Voltage Summary of Bus Bars – Peak Load 2015 with Existing Capacitors
B.2: Load Flow Plots Peak Load – 2015 with Existing Capacitors
B.3: Load Flow Plots Off-peak Load (60%) with Existing Capacitors
B.4: Load Flow Plots Off-peak Load – 2015 with Existing Capacitors
Appendix C: Additional Capacitor Banks Required till 2015
C.1: Voltage Summary of Bus Bars – Peak Load 2015 with Additional Capacitors
C.2: Load Flow Plots Peak Load – 2015 with Additional Capacitors

C.3: Reduction in MVA Loading of Transmission Lines – Peak Load 2015 with Additional Capacitors

C.4: Reduction in MVA Loading of HV/LV Transformers (132/11 kV, 66/11 kV and 33/11 kV) – Peak Load 2015 with Additional Capacitors

Appendix D: Additional Capacitors Banks Required till 2018

D.1: Voltage Summary of Bus Bars – Peak Load 2018 with Additional Capacitors

D.2: Load Flow Plots Peak Load – 2018 with Additional Capacitors

Appendix E: Step Sizes of Switched Shunt Capacitors

Appendix F: Harmonic Resonance Analysis and Sizes of Detuning Reactors

F.1: Harmonic Resonance Analysis without/with Detuning Reactors

F.2: Summary of Recommended Sizes of Detuning Reactors

Appendix G: Dynamic Reactive Power Compensation (DRC)

G.1: Voltage Stability Results without DRC

G.2: Voltage Stability Results with Recommended SVC at Shahibagh 132 kV (250 MVAR)

G.3: Voltage Stability Results with Recommended SVCs at Shahibagh and Kohat 132 kV (250 MVAR each)

G.4: Voltage Stability Results with Recommended SVCs at Shahibagh, Kohat and Peshawar University 132 kV (250 MVAR each)

Acronyms

AEAI	Advanced Engineering Associates International
DRC	Dynamic Reactive Power Compensation
NTDC	National Transmission and Despatch Company
OPF	Optimal Power Flow
PESCO	Peshawar Electricity Supply Company
PSS/E	Power System Simulator for Engineers
RPC	Reactive Power Compensation
SVC	Static VAR Compensator
USAID	United States Agency for International Development

Executive Summary

- The final report is submitted herewith for the detailed "Reactive Power Planning and Design Study" carried out for PESCO.
- Present problems of existing method of capacitor installations in PESCO system has been identified such as:
  - No optimum sizing and siting of capacitor banks
  - Violation of step voltage change criteria
  - No remedy for Inrush Current
  - No remedy for resonance at odd-harmonics
- For correct evaluation of reactive power compensation in PESCO, accurate power factors at 11 kV bus bars incoming have been calculated using the recorded active and reactive monthly energy at grid stations of PESCO for 12 months of a year (2011-12), and averaging with power calculated on the basis of hourly active/reactive energy at peak /off-peak of each month.
- Base case load flow was prepared for peak load conditions of 2015 based on latest load forecast of PESCO and latest transmission and generation expansion plan of National Transmission and Despatch Company (NTDC). Also Asian Development Bank (ADB) Tr-IV projects have been included. The simulation was run with existing installed capacitor banks at 11 kV and 132 kV, total of 728 MVARs. The voltage profile at most of the bus bars was found to be very poor, the voltages less than 0.95.
- Optimal Power Flow (OPF) was used to calculate economically and technically the most optimal size and site of the new proposed capacitor banks for the base year of 2015.
- Additional capacitors of 942.5 MVARs are required at 11 kV to bring the voltage of all 11 kV bus bars at 1.0 PU (100%) voltage in 2015. OPF has found some of the capacitors at 132 kV superfluous and removed from its analysis. It retained 242.4 MVAR out of existing 287.2 MVAR at 132 kV. Total of 1368.8 MVAR including the existing and newly proposed are required at 11 kV in 2015 peak load conditions. Thus total requirement of compensation together at 11 kV and 132 kV in 2015 is 1611.2 MVAR.
- Additional benefits gained from capacitor installations under the Peak Load Conditions of 2015 are as follows:
  - 35.7 MW reduction in Transmission losses
  - A reduction of 1112.34 MVA in the loading of Transmission Lines is realized
  - A reduction of 373.31 MVA in the loading of HV/LV (132/11 kV, 66/11 kV and 33/11 kV) Transformers is attained
- OPF was performed for off-peak load conditions (60% of the peak load) and it switched of most of the capacitor banks to avoid any over voltage and keep the bus voltages within the margin of 5% off-nominal.
- OPF was performed for the peak load conditions of 2018 and it was found that additional 277.6 MVAR are required at 11 kV. No additional capacitors are required at 132 kV. Thus total MVAR to

be available in the network of PESCO by the year 2018, including the existing, the additional proposed in 2015 and 2018, put together would be **1888.8 MVAR**.

- The step sizes have been worked out to design switched shunt capacitor banks rather than having one fixed capacitor. The most common switching steps would be 1.2 MVAR, 2.4 MVAR or 3.6 MVAR. Maximum of five steps have been proposed on most of the substations. A voltage control strategy along with the set points for the PLC controller has been provided.
- To resolve the issue of inrush transient current and resonance of odd harmonics, detailed harmonic analysis has been carried out and appropriate sizes of detuning reactors have been calculated for each step size of capacitor bank corresponding to the 132/11 kV transformer MVA size at each grid station.
- Dynamic stability analysis has also been carried out. A composite load model has been assumed based on the percent composition of different categories of loads identified by the PMS Load Forecast Report of NTDC.
- To avoid motor stalling and voltage instability in case of very severe 3-Ph fault happening at main 500 kV grid system i.e. Tarbela-Peshawar 500 kV single circuit connected to Peshawar 500/220/132 kV grid station (Sh. Mohammadi), the dynamic stability analysis has concluded to have three SVCs to be connected at132 kV level at following grid stations:
  - Shahibagh 132 kV +250 MVAR (capacitive)
  - Kohat 132 kV +250 MVAR(capacitive)
  - Peshawar University 132 kV +250 MVAR(capacitive)
- The Study provides complete comprehensive Plan and Design for Reactive Power Compensation to boost voltage profile for steady state as well as dynamic/transient conditions in PESCO network.

1. Introduction

Reactive Power Compensation (RPC) and its criticality for a power distribution network is a subject of paramount importance. Correct evaluation of the reactive power needs of a distribution network is necessary as this has many implications. For a distribution company the provision of acceptable voltages to its consumers is vital. In order to do so, the steady stage reactive power requirements of the system have to be adequately met. Power System Security and Voltage Stability are additional issues that require provision of sufficient reactive power in the system. The deficiency of reactive power can have many adverse effects on the power system including

- Poor voltages throughout the network and consumer dissatisfaction
- Motor Stalling phenomena that is experienced where there is a deficiency of reactive power in the network
- Voltage Collapse under dynamic post-fault conditions or whenever a large reactive power demand is generated in a power network
- Stress on reactive power sources such as generators which are farther away from reactive power demand centers. Meeting the reactive demand from sources which are farther away decreases the voltage of the network even outside the domain of the Distribution Company
- Transmission line capacity is used to meet the reactive power demand leaving fewer margins available for carrying active power. This also increases the losses throughout the network

In summary, both the steady state and dynamic condition of a power network is dependent upon the reactive power available in the system. The need is not only to meet the reactive power demand of a network be to meet it right at the source of the demand in order to attain the maximum advantages and avoid the degradation of the power network.

For PESCO, which is a DISCO with significant load demand within its network, the importance of Reactive Power Compensation is critical. It is imperative that the reactive power needs within PESCO are met adequately not only for the sake of PESCO's own network and consumers but also to avoid placing any additional stress on the National Grid of Pakistan. The need for reactive power compensation within PESCO is further highlighted by the fact that the region already suffers from a deficit of reactive power from nearby sources and consequently has a poor voltage profile. Furthermore the position of the transmission infrastructure of PESCO requires that the maximum capacity of transmission lines be utilized for carrying active power (MW) rather than stressed by reactive power (MVAR). Thus it is important for PESCO to plan in advance to be able to meet the reactive power needs of its network in the future.

Having understood the importance of Reactive Power within a system in general and for PESCO in the context of its distribution network, it must also be realized that this requirement be met on the basis of engineering and financial best-practices. This means that the exercise used to evaluate the Reactive Power needs within a system must provide solutions that are not only technically correct and verifiable but also provide PESCO with a least-cost technically fit solution in order to maximize the value of any investment in this project.

There is limited local generation of VARs through some power plants connected at 132 kV level in PESCO area such as Warsak, Malakand etc. The distant hydel power sources are Tarbela,

Ghazi Brotha and Mangla; the big thermal sources such as Kot Addu, Muzaffargarh, Guddu, Jamshoro and HubCo are much farther away in the South of the Country.

High X/R ratio of transmission lines prevents long distance transfer of reactive power, since much of it is consumed in I^2X losses. Transfer of reactive power over long distances should be avoided, and localized means of voltage control should be used, if possible. Drop in voltage is associated with reactive power flow. Approximate relationship describing voltage difference between two adjacent buses and reactive power flow is:

$$\Delta V = \frac{RP + XQ}{V}$$

Since, for most networks, X >> R, then ΔV determines Q. Thus, deficiency in reactive power will cause voltage to drop to a very low level. For example, sometimes, especially in summer, the source voltage at Tarbela is 550 kV whereas at receiving end of Peshawar 500 /220 kV grid station it is 460 kV with nearly 10% voltage drop and that is because of huge reactive power demand of PESCO in summer.

It is in this context that Peshawar Electricity Supply Company (PESCO) has engaged the services of Power Planners International (PPI) to conduct the Reactive Power Compensation study for its 132/11 kV network.

2. Problems of Existing Approach of Capacitor Installations

Before proceeding with how PPI conducted the RPC study and discussing its results, it is important to understand how the current method of capacitor installation in PESCO deviates from engineering best-practices and does not provide the maximum value to the client i.e. PESCO.

2.1 No Optimum Sizing and Siting of Capacitor Banks

To date no exercise has been carried out to evaluate the optimal sizing and siting of capacitors within the PESCO network. Currently both the sizing and siting of the capacitors are based on estimates which have not been backed by simulations designed specifically for this purpose. This results in an un-optimized way of adding capacitor installations in the network. These installations are either unable to maintain the desired voltage range within the network and even if they do so there is no way of evaluating if they provide the maximum cost-benefit to PESCO. This results in the following two scenarios:

- Under-estimating the reactive power need of the whole network or a portion of it and as a result the voltage profile of the entire network or localized portions is pulled down
- Over-estimation, which results in over-investment and at times driving the voltages too high on certain portions of the network

Both scenarios are undesirable and a way should be sought to avoid them altogether.

2.2 Violation of Step Voltage Change Criteria

One of the key factors that determine the bank size for shunt capacitors being installed within a network is the Voltage Step Change Criteria or the fundamental frequency voltage change. Assuming an infinite source at the primary side of a distribution transformer, an estimate of the voltage rise can be calculated by the following formula:

$$\Delta V = \frac{kVAr\ x\ (\%age\ impedance\ of\ Transformer)}{kVA\ of\ Transformer}$$

It is desirable to keep this step change below 3% and the acceptable criterion is to keep it below 5%.

In the current scenario where fixed shunt capacitors are installed, the only options that exist are between completely switching ON the bank and switching it OFF. As a result of this switching operation there is an immediate step change in the bus voltage. Due to sub-optimal sizing of capacitor banks in the network violations of the acceptable Voltage Step Change criterion take place within the network. Switching ON of full size of capacitor may cause overvoltage and switching it fully OFF may lead to low voltage and in either case we might be operating beyond the permissible limits.

Optimal sizing of capacitor banks would ensure that the Voltage Step Change value remains within acceptable limits of 3 to 5%. Normally switched shunt capacitor banks of different step sizes are employed to switch only the desired compensation, not more or less than required by

the system to remain within the operating limits. The switching is normally controlled by Programmable Logic Controller (PLC).

Currently all capacitor banks in PESCO are full sized ON or OFF, no switching in steps, and no controller.

2.3 No remedy for Inrush Current

When a capacitor bank is energized the bank and the networks are subjected to transient voltage and Inrush current. Large and high frequency inrush currents can damage capacitors. To avoid this problem it is common practice to insert inrush current limiting reactors in series with the capacitor banks. The size of these current limiting reactors is normally in the range of 100 to 200μH (micro Henry).

In the present practice in PESCO, no current limiting reactors have been installed in series with the capacitor banks. Hence the capacitors are gradually damaged.

2.4 No Remedy for Resonance at Odd-Harmonics

During fault or any switching condition resonance may occur by equalizing of inductive reactance of the network behind the bus bar and the capacitor bank connected to the bus. The resonance at odd harmonics beyond permissible levels by IEC Standards would play havoc with the capacitors. The life of capacitors will be drastically reduced, cables, bus bars, transformers and switchgears will be thermally stressed and connected equipment such as control systems can malfunction or fail.

This problem with harmonic resonance can be avoided by selecting a different reactor in series with the capacitor bank. The purpose of this reactor is specifically to avoid tuning to any odd harmonic frequency where harmonic current may be present. For this reason these reactors are termed as detuning reactors. The size of detuning reactor is in the order of some mH (mili Henry) i.e. higher than current limiting reactor and therefore it can serve both purposes i.e. current limiting as well as detuning.

In present installations of capacitor banks in PESCO no detuning reactors have been installed and the capacitors are exposed to harmonic currents thus causing damage to the capacitors.

The present Study will address all the four issues highlighted above and develop an optimal, more comprehensive and secure plan of capacitors installation.

3. Evaluation of Power Factors at 11 kV Buses of Substations

An important step in developing the base case scenarios for the PESCO Reactive Power Compensation Study was to correctly evaluate the power factors at each 11 kV grid station in the PESCO network. This exercise was very important as the Load Forecast that is developed only specified the active loading on the network. This active loading has to be rationalized with accurate power factors in order to correctly evaluate the reactive loading at 11 kV buses. This is essential because it is the reactive loading of the PESCO network that will determine the voltage profile of the network and it is this reactive demand that will have to be met in order to achieve the objectives of the PESCO RPC Study.

The study basis for the evaluation of the power factors was taken from detailed data provided to PPI by PESCO on its substations in the form of substation data log sheets.

The reasons for using this as a starting point for power factor evaluation are as follows:

- The database for this power factor evaluation was gathered through a very detailed and exhaustive exercise and represents a very accurate measure of the power factors of the PESCO system
- The nature of the load centers of PESCO will not see any significant change in the timeline considered in this study. Even though the loads will see a gradual increase from year to year, but the nature of loads i.e. commercial, industrial etc. would generally remain consistent allowing the power factors from the year 2011-12 to be used for the spot years of 2015 and 2018

In order to have an accurate representation of loads at 11 kV bus bars, it was important to figure out the power factor of the loads as close to the actual. Using the substations data log sheets received from PESCO, three Power Factors were calculated; monthly PF, PF before peak (or off-peak) time, PF after peak (or off-peak) time.

$$Monthly\ PF = \frac{Total\ KWH\ Consumed\ in\ a\ Month}{Total\ KVAH\ Consumed\ in\ a\ Month}$$

Whereas, total KWH and KVARH consumed in a month are the difference between the readings of KWH and KVARH at the beginning and end of a month recorded at the incoming of 132/11 kV transformer.

Similarly, we calculated hourly PF for the energy consumed an hour before (or after) the peak or off-peak hour (Nth hour):

$$Hourly\ PF = \frac{Total\ KWH\ Consumed\ during\ 1\ Hr\ before\ (or\ after) Nth\ Hr}{Total\ KVAH\ Consumed\ during\ 1\ Hr\ before\ (or\ after) Nth\ Hr}$$

The readings from the Power Factor meters installed at some of the substations were also made available in the substations data log sheets, but not too much reliance was placed on this data because these meters were not calibrated or maintained on regular basis, or some of them were faulty and out of order. Therefore the main focus was on the three power factors evaluated

from the readings of energy meters which were normally calibrated and maintained for the sake of logging of energy imports/exports at 11 kV bus bars.

Averaging of the three values of PFs and keeping in view of the nature/type of load, engineering judgment was applied to rationalize the power factors and a reasonable value was assigned to each load fed from each transformer of every grid. The power factor for any subsequent 11 kV bus bars that have been added in the PESCO network since 2011-12 has been carefully evaluated considering the nature of that substation and the power factor of substations in the vicinity which have a similar load composition. This analysis for the power factors used in this study has been attached in Appendix A.

With this evaluation of power factor and the latest load forecast for the PESCO network which details the MW load at each substation, the MVAR load corresponding to the MW load at each 11 kV bus bar was determined as follows:

$$Load\ MVAR = tan\{cos^{-1}(Power\ Factor)\}\ x\ Load\ MW$$

Having calculated the Load MVAR, this was used as in input in developing the base cases for years 2015 and 2018. At some substations load had to be shed in order to avoid overloading of the 11 kV transformers. This had to be done because in the demand forecast the loading on these substations was projected to increase however insufficient augmentation has been done for these transformers according to the latest plans. Hence the transformers could not feed the projected loads and load had to be shed. However the overall load shed in the PESCO area was negligible. The resulting final MW and MVAR loads on each substation were then input in the cases.

4. Base Case Study with No Additional Capacitors till 2015

4.1 **Must-To-Meet** Criteria of Grid Code for Voltage Regulation

The must-to-meet criteria of Grid Code for voltage regulation are as follows:

- Normal condition ± 5% Off-Nominal
- Contingency (N-1) condition ± 10% Off-Nominal

4.2 Normal Load Flow of Peak Load Conditions of 2015

In order to have a reference benchmark scenario under which the results of the RPC study could be evaluated objectively, the PESCO system was at first modeled with only the currently existing capacitors in the PESCO system. This would not only highlight the voltage profile of the PESCO network in the future if only the current capacitor installations were maintained but also serve as a base case against which the results of the different spot years of the RPC study could be compared.

The base case which has been used for benchmarking purposes is that of the spot year of 2015. This has been chosen because it is a realistic timeline in which PESCO will be in a position to have executed the findings of this study and upgrade its capacitor installations. Also PPI as sub-consultant for ADB Tranche-IV (under SMEC), has carried out study of augmentations/extensions of 132/11 kV transformers implemented in 2015 and have included them in the present RPC Study as well, to fully update the benchmark base case. The base case was developed for both Peak and Off-Peak (60% of the peak) conditions of PESCO.

Summer peak conditions of June 2015 were studied when the diversified peak demand of Peshawar Distribution Area, as forecasted by PESCO/NTDC (PMS), would be nearly 2865 MW (computed including load shedding). Developing a Peak-Load scenario was necessary to evaluate the network under the most voltage stressed conditions. Similarly developing an off-peak scenario was also important not only for evaluating the voltage conditions during light load conditions but also to serve as a basis to find out the minimum online capacitors that would be required in 2015.

The case has been simulated on the basis of the data provided for ADB Tranche-IV. This includes the latest generation and transmission plans of NTDC and PESCO, load forecast as well as any further details that were provided by PESCO during the preparation for ADV Trance-IV cases. This allowed PPI to set up the most accurate and realistic model of PESCO system conditions in 2015. The data for the existing capacitor installations was supplied by GSO, PESCO; the detail is as shown in Table 4.1.

Table 4.1

Base kV Level	Existing Capacitors, MVAR
132 kV	287.2
66 kV	0
33 kV	0
11 kV	440.7
Total	**727.9**

Using this data set, base cases were developed in PSS/E for the Peak and Off-Peak conditions of 2015 which modeled the Power System of Pakistan with a specific focus on PESCO. The Off-Peak scenario was developed by reducing the load on PESCO buses to 60% of Peak Load. These cases were then used to carry out Load Flow Simulations in PSS/E.

The Steady State Load Flow Simulation results of this case have been attached in Appendix B. The results show that the current capacitor installations are unable to maintain an acceptable voltage profile on several 132 kV, 66 kV and 11 kV buses under the peak load conditions of 2015. This is tabulated in Appendices B-1.1 and B-1.2 for 132/66 kV and 11 kV respectively in the form of a voltage summary of all the buses in the PESCO system.

Additionally, the steady state load flows have been plotted in Appendix B-2 for the peak load conditions of 2015. The results show that the power flows on all circuits do not remain within their rated limits. A close investigation reveals that this is due to the heavy reactive loading on lines which causes the lines to become overloaded. Furthermore, the voltage on many buses is below the acceptable criteria.

Appendix B-3.1 shows that under 60% off-peak conditions the voltage profile of PESCO was maintained within acceptable limits by switching OFF all the capacitors at 132 kV and 11 kV.

Appendix B-1 and B-2 show that additional investigation needs to be carried out to quantify the poor voltage profile of PESCO in order to understand the need for capacitor additions in the future.

4.3 Inadequacy of Existing Capacitors in PESCO: Poor Voltage Profile

After the base case scenario of 2015 was developed and the results were analyzed it was found that the existing capacitor installations of 728 MVAR are insufficient to maintain an acceptable voltage profile on the transmission and distribution network of PESCO under Peak-Load conditions of 2015. The details of the voltages on individual bus bars in the PESCO network under Peak-Load conditions are attached in Appendix B-1.1 and B-1.2 and these results have been plotted in Appendix B-2

A statistical analysis of these results was carried out and Table 4.2.1 summarizes the scenario of the peak load conditions of 2015:

Table 4.2.1

Voltage Level	Average Voltage (PU)	Average Voltage (kV)	Standard Deviation (kV)
132 kV	0.971	128.13	6.78
66 kV	0.921	60.80	9.11
33 kV	0.885	29.20	2.06
11 kV	0.943	10.37	0.90

In order to have a complete understanding of the exact magnitude of the poor voltage profile, additional analysis was carried out and the results are presented in Table 4.2.2 as follows:

Table 4.2.2

Voltage Level	Minimum Voltage (PU)	Percentage of Buses below 0.95 P.U. Voltage
132 kV	0.785	28.7%
66 kV	0.505*	31.6%
33 kV	0.821	80.0%
11 kV	0.456*	40.7%

* Result of load flow simulations for projected loads of 2015 but may not happen in real; load would be shed to maintain acceptable voltage level if capacitors are not installed.

The results of the statistical analysis clearly point out that the current capacitor installations in the PESCO network are under-sized to deal with the projected load growth in the future scenario of 2015 and the consequent voltage stress that it places on the transmission and distribution network of PESCO. Of particular concern are the 33 kV and 11 kV voltage scenarios which clearly highlights that 80% of the 33 kV buses and 40.7% of the 11 kV buses are below the acceptable voltage limit of 0.95 PU under normal conditions. If we consider the criteria of a minimum voltage of 1 P.U. at 11 kV buses the results show that up to 78.9% of 11 kV buses will fail to meet this criteria with current capacitor installations under the peak load scenario of 2015. The feeders emanating from these 11 kV bus bars would have an even worse voltage profile. Under contingency conditions on the 132 kV network of PESCO, the voltage profile would tend to become even worse as the increased load on the intact circuits would result on an even greater voltage drop on receiving end 132 kV buses and this would consequently drive the voltage on the 11 kV buses and their feeders even lower.

The results of the base case simulations as well as the analysis carried out clearly points to the fact that PESCO needs to enhance the reactive power installations within its network and needs to install additional capacitors in its network in order to deal with the increased voltage stress that that system will be subjected to in the future. PESCO would require additional capacitors not only to attain an acceptable voltage profile on its network under normal conditions, but these capacitors would also be needed to deal with contingency conditions.

5. Additional Capacitors Requirement for Peak Load of 2015 through Optimal Power Flow Analysis

5.1 What is Optimal Power Flow

Having identified the need for additional capacitor installations, we will now consider the methodology for evaluating the size and placement of these capacitors. Optimal Power Flow has been selected as the technique for this purpose.

The selection of OPF as a tool for the RPC study is a matter that requires elaboration.

- The Transmission and Distribution Network of PESCO in the year of 2015 represents a significantly large power system with diversified peak demand of 2865 MW. There are one hundred and one 132kV, nineteen 66kV and ten 33kV sub-stations. Many of these substations are overloaded or loaded close to their installed capacity.
- Each bus bar is connected to the network either through transformers or through transmission lines making the entire network a highly meshed entity.
- Furthermore, in order for the results to be applicable in the context of the entire Power System of Pakistan, the simulation has to be carried out over the entire Power network of Pakistan making this problem a hugely complex one
- A traditional power flow solution exercise would require an engineer to take note of the system conditions, manually place shunt capacitors in the system, solve the simulation, take note of the results and then re-iterate the process until an acceptable solution was found.
- The traditional power flow exercise would have been a very tedious and inefficient process and even though an acceptable solution could have been found in terms of bringing the entire PESCO under acceptable voltage limits, no means of verification would exist to ensure that this was the least cost or 'optimal' solution.
- The Power System will become even larger in the scenario of 2018 making such evaluations even more difficult
- As capacitor additions represent a considerable financial investment for PESCO, it is imperative that a solution be found that would be the least cost solution that would be able to meet the required objectives. It is in this context that the powerful tool of OPF was considered for the PESCO RPC study.
- Optimal Power Flow represents a very powerful tool that allows the problem for minimal capacitor additions to be translated into an analytical domain where an optimal least cost solution can be found on a mathematical basis as compared to conventional hit-and-trial methods

PPI has therefore selected the state of the art Power System Simulator for Engineers (PSS®/E) and its Optimal Power Flow module for carrying out the simulations for PESCO RPC Study.

Optimal Power Flow (OPF) is a technique for Power System Simulation and Analysis which has its roots in the subject of Mathematical Optimization. Mathematical Optimization is the selection of a best element (with regard to some criteria) from some set of available alternatives. In the context of Optimal Power Flow, it is sought to solve an optimization problem consisting of an objective function under some equality and inequality constraints. This translates into a non-linear problem of the form:

Minimize f(x,y….)

Subject to: Equality constraints and Inequality constraints

For the purpose of the RPC study we are programming the OPF algorithms to solve the problem where we seek to minimize the amount of shunt capacitors required at PESCO buses subject to equality constraints, such as power flow equations which ensure that the net power injection at each bus equals the sum of the power flows on the connected branches etc., and inequality constraints which in the PESCO RPC scenario are the maximum and minimum magnitudes of the acceptable bus voltages in the PESCO network which have been chosen to be:

- A voltage range of 1.0 P.U. to 1.05 P.U. for 11 kV Buses in the PESCO system. This voltage range will ensure that an acceptable voltage is maintained at the tail end of feeders emanating from 11 kV Bus Bars of substations of PESCO
- A voltage range of 0.95 P.U. to 1.05 P.U. for all other buses of 66 kV, 132 kV and 220 kV

5.2 Setting up PSSE OPF for PESCO RPC Study

The particular function in PSS/E OPF that is set up to solve the problem for least cost of installed capacitors is:

$$F(B) = \sum_{i=1}^{NVARS} |B_i| C_i$$

And:

$$B_{IND,MAXi} \leq B_i \leq B_{CAP,MAXi}$$

Where:

$B = adjustable\ bus\ shunt\ susceptance\ (per\ unit)$

$B_{CAP,MAX} = capacitive\ limit\ (per\ unit)$

$B_{IND,MAX}$= inductive limit (per unit), considered zero for capacitor installations

$C = shunt\ cost\ /\ per\ unit\ MVAR$

$NVARS = number\ of\ adjustable\ shunt\ candidate\ buses$

By setting up the function F(B) stated above as a cost function we are solving for the minimal cost of capacitors that need to be added to the system in order to meet our specified objectives.

An important consideration in this analysis would be the varying cost of capacitors on different voltage levels. This is an important factor as it lends strength to the OPF analysis making it very comprehensive. It allows not only the optimal siting and sizing of capacitor banks but allows us to make this optimal solution the most cost effective. For the purposes of this study we have taken the cost ratio of 132 kV, 66 kV and 33 kV capacitors to that of 11 kV capacitors as 3.75:1. This assumption was taken after evaluating the market conditions for the cost of current 132 kV, 66 kV, 33 kV and 11 kV capacitor installations in place within distribution companies in Pakistan and data supplied by PESCO in this regard.

Thus we have ensured that the study results will provide PESCO with a solution with the least cost and maximum value addition.

The objective criterion that has been considered **must-to-meet** under normal and contingency conditions in this study is:

- A voltage range of 1.0 P.U. to 1.05 P.U. for 11 kV Buses in the PESCO system. This voltage range will ensure that an acceptable voltage is maintained at the end of feeders emanating from 11 kV Bus Bars of PESCO
- A voltage range of 0.95 P.U. to 1.05 P.U. for all other buses

The base case of 2015 with existing PESCO capacitors is then loaded into the OPF module and prepared with the assumptions stated in this section. After having set up the case with these assumptions the simulation can be progressed.

5.3 Optimal Sizing and Siting of Capacitors for Normal Case

The problem was programmed in PSS/E OPF module and the simulation was run up. Next, the results of the simulation were analyzed. PSS/E evaluates the optimal sizing and siting of the capacitors based on the exact values required to meet the set voltage criteria. With these exact values the entire solution converges at the point where the voltage range criteria is met for all buses.

After calculation of these exact values, they then have to be rationalized into a capacitor bank size based on the industry standard capacitor sizes available. Engineering judgment was applied in rationalizing these values by selecting the nearest possible capacitor bank size which is a multiple of 1.2 MVAR in PESCO system.

After rationalizing the values and evaluating the bank sizes, a case of 2015 was developed with these capacitor banks and subjected to normal Load Flow Analysis. The results of the load flow analysis showed that apart from very few violations, the voltage profile of the PESCO network met the objective criteria. Where violations were found, they were trivial in nature and manual fine tuning and minimal capacitor addition or reduction allowed these violations to be removed.

The final results of the capacitor sizing were then simulated in PSS/E to verify that the acceptable voltage criterion was met. For meeting the acceptable voltage criteria in the base case a total of 758.9 MVAR needed to be added at 11 kV bus bars. OPF has made all capacitor additions at 11 kV to provide most optimal solution technically and economically. OPF has found some of the capacitors at 132 kV superfluous and removed from its analysis. It retained 242.4 MVAR out of existing 287.2 MVAR at 132 kV.

5.4 Additional Capacitors to Meet Contingency Conditions

The Peak Load conditions of a network present an accurate picture of the voltage stress on a network under normal conditions. PPI has studied an even more detailed scenario of studying the PESCO network under N-1 contingency conditions as well.

The importance of studying the network under N-1 contingency conditions must be understood in the context that any 132 kV, 66 kV or 33 kV circuit outage in the PESCO network would result in the load of that line being shared by any circuit in parallel to it. The electrical model of a transmission line is such that the inductive effect of a line increases when additional current flows through the line leading to a greater voltage drop across it. The additional loading on intact parallel circuits during N-1 contingency conditions thus leads to a scenario where the voltage profile becomes worse.

In order for the PESCO network to meet the objective voltage criteria under contingency conditions, PPI conducted a study of N-1 contingency conditions on the PESCO network. As a result of this study it was found that under certain contingency conditions the voltage on certain buses fell below the **must-to-meet** criteria. Corrective action was taken based on the results of the N-1 contingency analysis and some additional capacitors had to be placed and at certain buses capacitors had to be removed in the PESCO network in order to satisfy the **must-to-meet** criteria.

5.5 Total Capacitors Needed in 2015

When the results of the normal and contingency conditions were evaluated for the scenario of 2015 for normal and contingency conditions, the total picture is shown in Table 5.2.1.

Table 5.2.1

Base kV	Existing (MVAR)	Additional for Normal Conditions (MVAR)	Additional for Contingency Conditions (MVAR)	Total (MVAR)
132 kV	287.2	-44.8	-	242.4
66 kV	0	0	0	0
33 kV	0	0	0	0
11 kV	440.7-14.4=426.3	758.9	183.6	1368.8
			Total	**1611.2**

To quantify the benefits gained from this capacitor addition we look at Table 5.2.2 and Table 5.2.3.

Table 5.2.2

Voltage Level	Average Voltage (PU)	Average Voltage (kV)	Standard Deviation (kV)
132 kV	1.027	135.50	1.72
66 kV	1.019	67.22	1.31
33 kV	1.028	33.93	0.15
11 kV	1.035	11.38	0.09

Table 5.2.3

Voltage Level	Minimum Voltage (PU)	Percentage of Buses below 0.95 P.U. Voltage
132 kV	0.980	0%
66 kV	0.973	0%
33 kV	1.024	0%
11 kV	1.011	0%

The results immediately show that not only is the average voltage profile of the network is considerably improved but we have 0% buses below 0.95 P.U. voltage mark. In addition no 11 kV bus is below the minimum 1.0 P.U. mark. Figure 5.4.1 shows the voltages of the post-capacitor addition scenario compared to the pre-capacitor addition scenario.

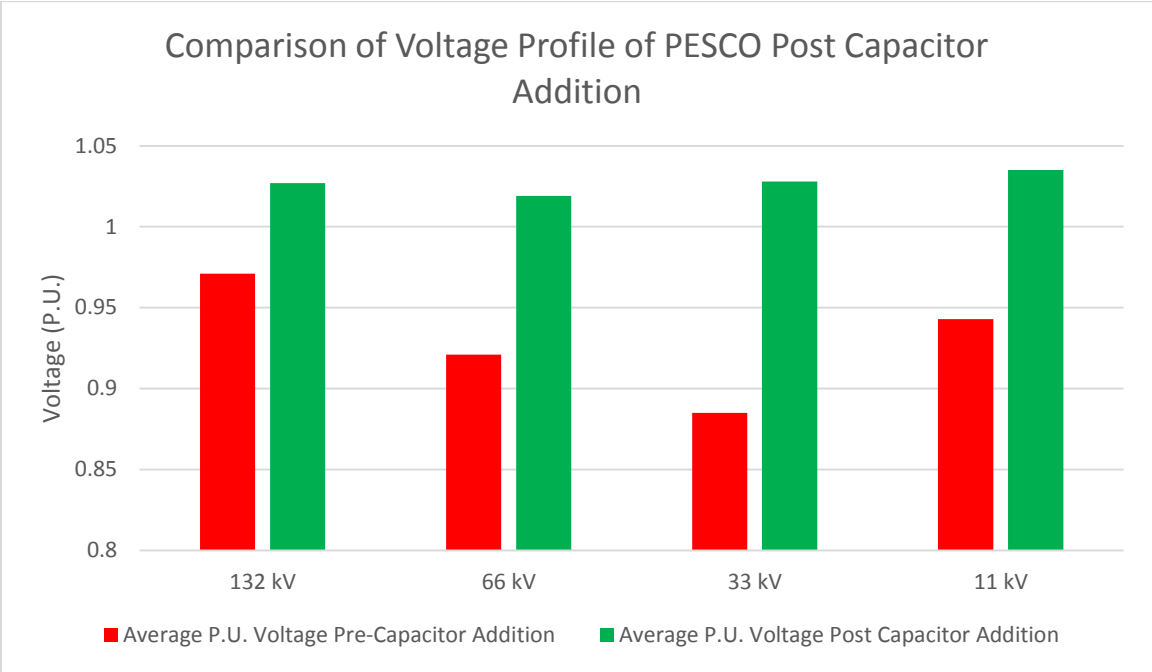

Figure 5.4.1

The comparison of standard deviations in Table 4.2.1 and Table 5.2.2 reveal that another benefit that will be achieved upon placement of capacitors in accordance with the OPF study results is that not only will the voltage profile be better in terms of the voltage on individual bus bars, the average voltage of the network but also the variability in the voltage across the network will be reduced. This is best described by comparing Figure 5.4.2 and Figure 5.4.3

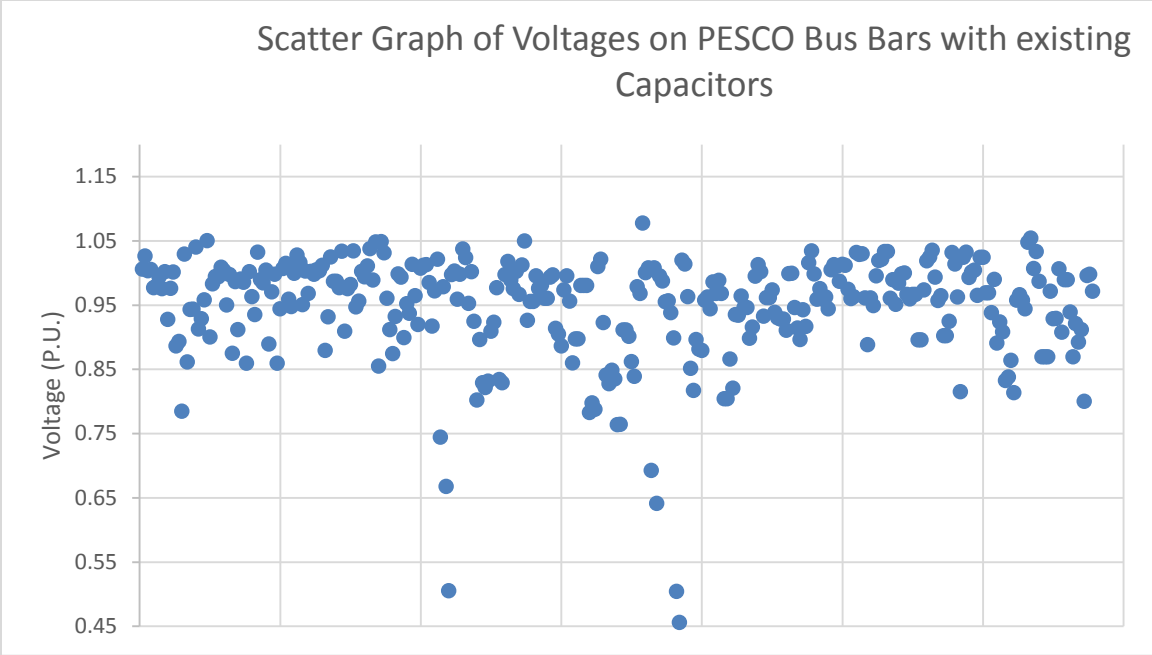

Figure 5.4.2

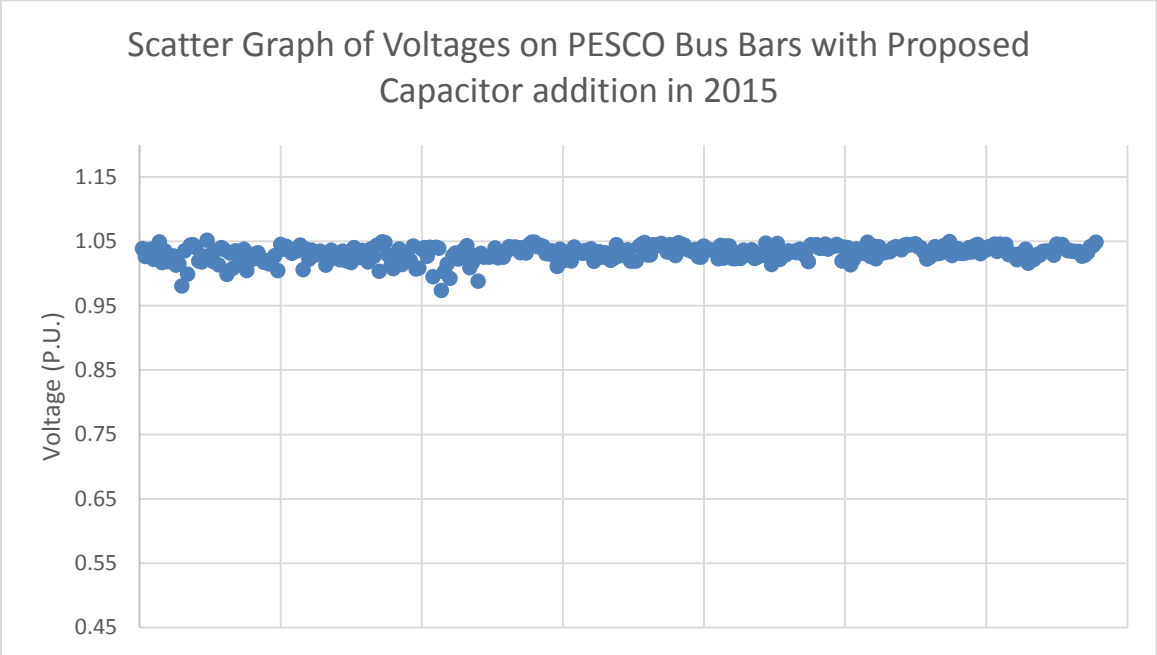

Figure 5.4.3

The objective of the study was to satisfy the **must-to-meet** criteria of:

- A voltage range of 1.0 P.U. to 1.05 P.U. for 11 kV Buses in the PESCO system. This voltage range will ensure that an acceptable voltage is maintained at the end of feeders emanating from 11 kV Bus Bars of PESCO
- A voltage range of 0.95 P.U. to 1.05 P.U. for all other buses

The results show that this criteria was completely satisfied. In addition to this the added benefit of a more consistent voltage profile across the whole network was also achieved.

5.6 Additional Benefits Gained from Capacitor Installations in 2015

Apart from the advantages in improvement in the voltage profile of the entire PESCO network, the following additional benefits are realized by the implementation of capacitor installations:

- With reactive power being supplied closer to the demand centers i.e. 11 kV Bus Bars the loading on 132 kV, 66 kV and 33 kV lines is reduced allowing this margin to be used to deliver more active power instead of catering to the reactive power needs of the PESCO Network. The total reduction of MVA loading on 132 kV, 66 kV and 33 kV lines is 1112.34 MVA. A detailed table of the reduction in the line loading within the PESCO network after capacitor installation is given in Appendix C-3.
- As a result of capacitor installations and the subsequent reduction in the loading on 132 kV, 66 kV and 33 kV lines, under the peak load conditions of 2015,
  reduction of transmission losses up to 34.7 MW can be attained in PESCO. However as the loading varies through the year these losses would also vary in future.
- Similarly meeting the reactive demand of the PESCO network at the 11 kV Bus Bars reduces the reactive power flowing through the HV/LV (132/11 kV, 66/11 kV and 33/11 kV) Transformers. As a result of these capacitors the total reduction in the MVA loading of the HV/LV transformers is 373.31 MVA and this gain in MVA capacity can be used to supply additional demand in the PESCO network. A detailed table of this reduction in transformer loadings is given in Appendix C-4.

It is important to note that although additional MVA capacity has been gained as a result of capacitor installations, other infrastructure requirements and the availability of generation needed to supply this will have to be evaluated in a separate study.

6. Additional Capacitors Requirement for Peak Load of 2018

For studying the medium term scenario of the PESCO network the Peak-Load scenario of 2018 was studied. This case was also prepared on the basis of the data provided for ADB Tranche-IV. This includes the latest generation and transmission plans of NTDC and PESCO, load forecast as well as any further details that were provided by PESCO during the preparation for ADB Trance-IV cases.

With this data, PPI was able to maintain an accurate model of the system conditions, particularly that of PESCO, for the Peak-Load Scenario of 2018.

The capacitors for the finalized case of 2015 were added to this model so as to calculate the additional values of the capacitors required to sustain the must-to-meet criteria in 2018. The case was set up in OPF and the simulations were run find the capacitors required to meet the criteria under normal conditions.

After the case of peak load conditions of 2018 was converged for normal conditions, the exercise of rationalizing these capacitor values was carried out. This model was then subjected to Load Flow Analysis and N-1 contingency analysis. Some fine tuning was required to ensure that the model could meet the study criteria for contingency conditions and engineering judgment was applied during this trivial fine tuning exercise.

The results showed that a total of 277.6 MVAR capacitors had to be added to the PESCO network in order to satisfy the must-to-meet criteria in 2018 under normal and contingency conditions. With this the total sum of capacitors at 132 kV and 11 kV in the PESCO network comes out to be 1888.8 MVAR in 2018 as detailed in Table 6.1

Table 6.1

Base kV	Existing (MVAR)	Total Additional for 2015 (MVAR)	Total Additional for 2018 (MVAR)	Total (MVAR)
132 kV	287.2	-44.8	-	242.4
66 kV	0	0	0	0
33 kV	0	0	0	0
11 kV	440.7-14.4=426.3	942.5	277.6	1646.4
			Total	**1888.8**

The detailed results of the study for 2018 are attached in Appendix-D. The details of the voltages and capacitor additions are attached in Appendix D-1.Load flow results are shown plotted in Appendix D-2 for the 2018 Peak-Load conditions. A statistical analysis of these results is shown in Table 6.2 and Table 6.3.

Table 6.2

Voltage Level	Average Voltage (PU)	Average Voltage (kV)	Standard Deviation (kV)
132 kV	1.022	134.88	1.76
66 kV	1.016	67.08	1.32
33 kV	1.027	33.81	0.28
11 kV	1.027	11.29	0.11

Table 6.3

Voltage Level	Minimum Voltage (PU)	Percentage of Buses below 0.95 P.U. Voltage
132 kV	0.978	0%
66 kV	0.981	0%
33 kV	1.008	0%
11 kV	1.001	0%

The results show that the capacitors banks are successful in boosting the voltage profile of the network to the required acceptable conditions. Furthermore, no 11 kV bus in the network goes below the **must-to-meet** criteria of 1.0 P.U. Compared to the case of 2015, the average voltage on 132 kV, 66 kV, 33 kV and 11 kV bus bars has decreased nominally. Since the average voltage of the 132 kV, 66 kV and 33 kV bus bars is well above the **must-to-meet** minimum voltage criterion of 0.95 P.U. and similarly the voltage of 11 kV bus bars is well above the **must-to-meet** minimum voltage criterion of 1.0 P.U. the results are considered a success and an attempt to increase this voltage beyond this point would be considered an over-investment and would not provide any value addition.

Figure 6.1 serves as a quick reference for comparison between the results of the base case of 2015 without any capacitors and the final results of the cases of 2015 and 2018 post capacitor addition.

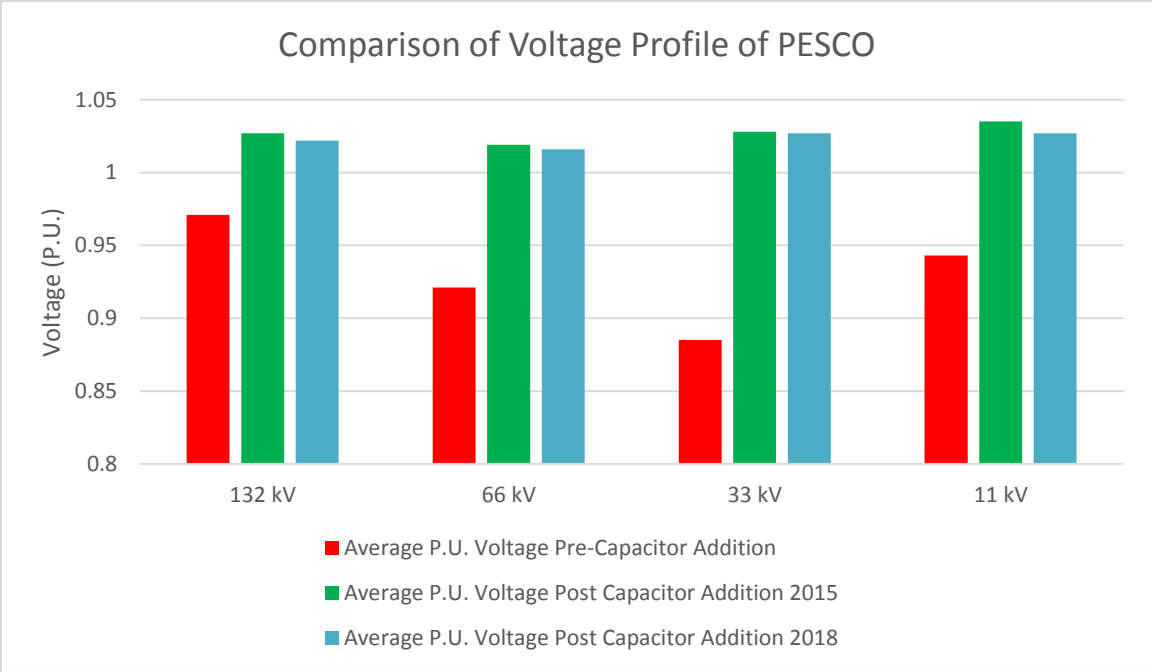

Figure 6.1

A scatter graph was plotted for the case of 2018 as well in order to see how consistent the voltage profile was over the network. Figure 6.2 shows this scatter graph.

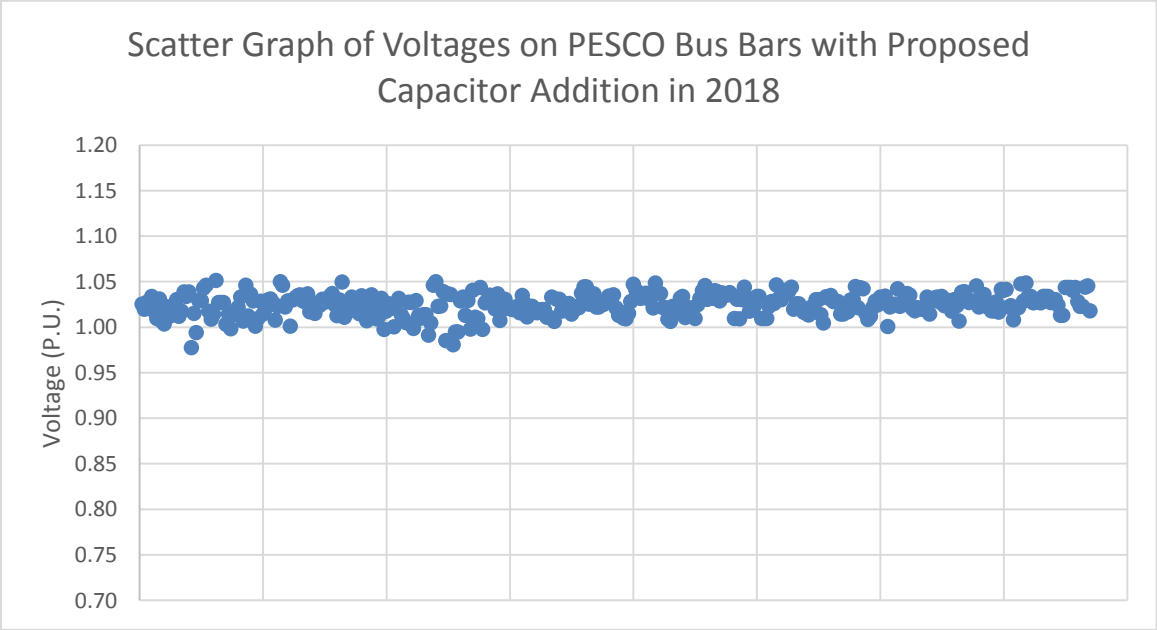

Figure 6.2

The graph shows that the network profile of PESCO is consistent throughout the network even in the case of Peak-Load conditions of 2018.

In conclusion the objectives of the study in terms of controlling the network voltage profile have been met for both the scenario of 2015 and that of 2018 under normal and contingency conditions. The results of the study the power flows on all circuits remain within their ratings and the voltage on all buses in the PESCO network can be maintained to satisfy the targeted objectives of the study.

7. Switched Shunt Capacitor Banks' Step Sizing

7.1 Step Sizing of Switched Shunt Capacitor Banks

Presently the capacitor banks in PESCO are fixed and not switchable in steps. For relatively bigger size of capacitors installed at substations with low short circuit MVA or low rating of 132/11 kV, 66/11 kV or 33/11 kV transformer i.e. at weak node, the ΔV i.e. the step voltage change at switching On or OFF of the capacitor might be more than the acceptable 3 to 5% and the system may feel jerk.

$$\Delta V = \frac{kVAr\ x\ (\%age\ impedance\ of\ Transformer)}{kVA\ of\ Transformer}$$

Also switching ON of full size of capacitor may cause overvoltage and switching it fully OFF may lead to low voltage and in either case we might be operating beyond the permissible limits.

To overcome these problems we have proposed switched shunt capacitors instead of fixed capacitors. The step sizes have been worked out keeping in view of short circuit strength and ΔV. The basic building blocks or step sizes have been assumed either 1.2 MVAR, 2.4 MVAR and 3.6 MVAR depending on the size of the total capacitor bank required at that bus bar. We have tried to keep maximum of five steps in one bus bar. Aiming to keep the steps at a lower number would result in larger step sizes and lead to an unacceptable voltage step change of over 5% on some bus bars. The list of proposed step sizes along with analysis of ΔV is attached as Appendix-E.

7.2 Voltage Control with PLC Settings of Switched Capacitor Banks

Each step will be switched through contactors of 11 kV through Programmable Logic Controller (PLC) as shown in Fig 7.1

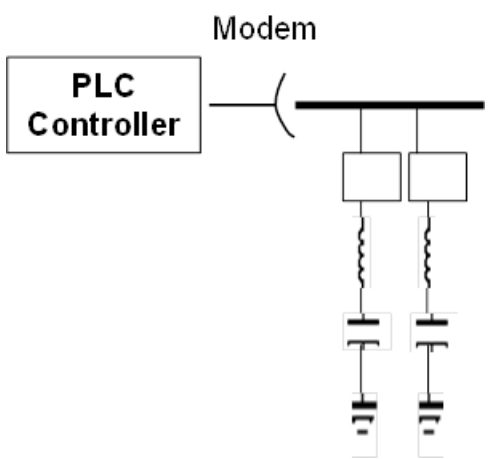

Fig. 7.1

The signals from PT and CT of 11 kV incoming may be used to communicate to the PLC controller.

A voltage based control strategy has been developed for the PLCs as part of the study. PPI has evaluated the step sizes for each capacitor banks. The voltage settings for the PLC based controller would be as follows:

- For 132 kV the voltage set-points will be at 0.95 P.U. or 125.4 kV as the lower threshold and 1.05 P.U. or 138.6 kV as the upper threshold
- For the capacitors at 11 kV the voltage set-points will be at 1.0 P.U. or 11 kV as the lower threshold and 1.05 P.U. or 11.55 kV as the upper threshold. This would ensure that the voltage at the tail ends of feeders is maintained above 0.95 P.U.

The PLC based controller will be used to switch the individual steps in the capacitor banks on or off till the voltage is within the desired threshold.

The PLC control may also be made by defining the set points of MVAR or Power Factor based on the signals communicated from the 11 kV incoming.

8. Series Reactors to Overcome In-rush Current and Resonance at Odd Harmonics

8.1 Electrical Resonance

In an electrical system, when line inductive reactance becomes equal in magnitude with capacitive reactance there occurs a phenomenon called resonance which damages the capacitor banks installed. At resonance, electrical circuit oscillates at resonant frequency causing resonant current to flow through capacitors damaging the capacitor banks.

In Fig 8.1 the switched shunt capacitor bank is directly connected to 11 kV bus bar with no measures to mitigate the inrush current or avoid resonance with the source reactance (system behind 11 kV bus bar).

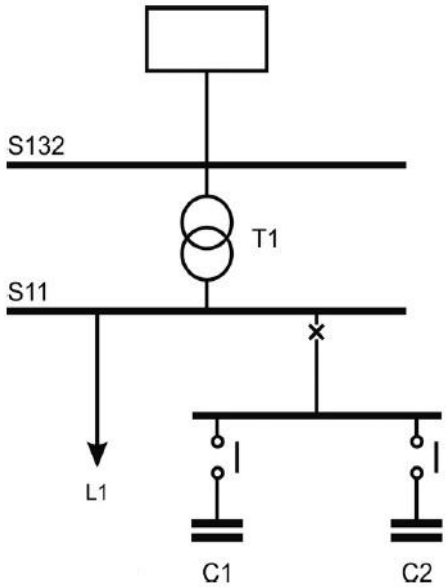

Fig. 8.1

8.2 Avoiding Resonance

This problem with harmonic resonance can be avoided by selecting a reactor in series with the capacitor bank. The purpose of such reactors is to avoid tuning to any frequency where odd harmonic current may be present. For this reason these reactors are termed as detuning reactors.

8.3 Capacitor Switching Transients

When a capacitor bank is energized, the bank and the electrical network are subject to transient voltage and current. High inrush current flows into the capacitor bank which can damage the

capacitor bank. The severity of this effect is determined by the size of the capacitor and the network impedance.

8.3.1 Solution to This Problem

To decrease the effect of capacitor switching transients, current limited reactors are inserted in series with the capacitor banks.

8.4 Our Strategy to Tackle These Problems

The strategy that we have adopted to tackle these problems is simple and serves the purpose of both detuning and current limiting reactors. We have designed detuning reactors in such a way that they not only tune the resonant frequency to that frequency where no harmonic current will be present but also solves the problems of capacitor switching transients.

8.4.1 Design of Detuning Reactors

The parameters that we know already are the line inductive reactance and shunt MVAR of capacitors installed on each bus.

From line inductive reactance, line inductance is calculated as

$$L = \frac{X}{2\pi f}$$

Where,

L = Line Inductance in Henrys

X = Line impedance in ohms

f = System Frequency

From Shunt MVAR, capacitance in Farad is calculated as

$$C = \frac{B}{2\pi f * kV^2}$$

Where,

B = Shunt MVAR

C = Capacitance in Farad

f = System Frequency

kV = Bus voltage in kV

Then resonant frequency is calculated as

$$f_r = \frac{1}{2\pi\sqrt{LC}}$$

Where,

f_r = Resonant Frequency

L = Line inductance in Henry

C = Capacitance in Farad

Then Harmonic number is calculated as

$$Harmonic\ No. = \frac{f_r}{f}$$

If this Harmonic No. is odd, then even harmonic number close to it is selected and new resonant frequency is calculated using this equation.

$$\mathrm{f}_{r(new)} = Even\ Harmonic\ No. * f$$

Then using this $\mathrm{f}_{r(new)}$ inductance is calculated as

$$L_{(new)} = \frac{1}{4\pi^2 {f_{r(new)}}^2 C}$$

Then Detuning Reactor in Henrys is calculated as

$$L_{Detun} = L_{(new)} - L$$

The detuning reactor designed will avoid both resonance and capacitor switching issues efficiently. The proposed configuration is shown in Fig. 8.2

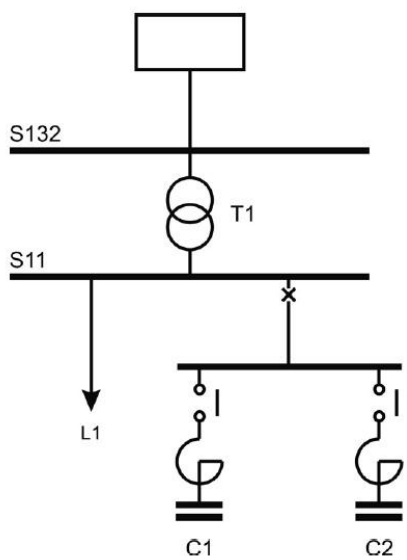

Fig. 8.2

8.5 Final Sizing of Reactors

Proposing different sizes of detuning reactors for each bus bar is not practical. So this procedure of designing is developed for each bus bar where capacitor is installed. Analyzing the values of detuning reactors obtained, symmetry is found in values of detuning reactor for fixed MVA rating and capacitor size. Using this symmetry, reactor values are standardized. Then these

standard detuning reactors are checked for each bus bars and capacitor block. The results are satisfactory. They tune the resonant harmonic number of each bus to the nearest even harmonic number efficiently. Summary of recommended sizes of detuning reactors is given in Table 8.1.

Table 8.1: Summary of Recommended Sizes of Detuning Reactors

Sr. No.	Transformer Rating (MVA)	Capacitor Block (MVAR)	Detuning Reactor (mH)
1	40	1.2	3.162
2	40	2.4	3.152
3	40	3.6	3.95
4	40	4.8	3.678
5	40	6	3
6	26	1.2	0.166
7	26	2.4	0.405
8	26	3.6	0.743
9	26	4.8	0.01
10	26	6	1.78
11	15	1.2	0.783
12	15	2.4	4.04
13	13	1.2	0.869
14	13	2.4	0.222
15	13	3.6	2.4
16	13	4.8	1.01
17	10	1.2	0.338
18	7.5	1.2	3.48
19	7.5	2.4	4.85
20	6.3	1.2	3
21	6.3	2.4	2.7
22	4	1.2	8.8

9. Dynamic Reactive Power Compensation (DRC)

9.1 Purpose of DRC: Voltage Stability Issues

The reactive power demand is highest during summer due to air-conditioning, refrigeration loads and other motor loads, and when system faces voltage dip due to any fault followed by trip of a circuit of 500 kV, the voltage recovery gets very slow and lead to voltage collapse. In order to meet the reactive power demand for steady state conditions, the amount of switched shunt capacitor banks to be installed in PESCO network in 2015 and 2018 has already been quantified and discussed in the previous chapters. However, these capacitor banks are not so helpful under transient/dynamic conditions when motor load is dominant in the system during summer. In fact the air-conditioning motors and other motors, while re-accelerating after clearance of fault, do not get enough voltage support for re-accelerating torque, and set to stall. This motor stalling phenomenon causes to draw huge reactive current from the system, and leads the voltage to drop down further, and this vicious circle causes the system to face voltage-instability leading to wide spread voltage-collapse and brown-out or blackout across the whole system. This phenomenon was studied in detail, by carrying out the stability studies using the dynamic load models, and the results indicated that installation of SVC would be a remedy to overcome it.

9.1.1 Slow Voltage Recovery and Voltage Collapse

Voltage stability is the ability of the system to maintain acceptable voltages at all buses, following a disturbance. A disturbance (trip of a generator or line) near a load center causes a voltage drop (reactive power supply deficiency). Because of the voltage drop, load is initially reduced. Transformers (LTC's) begin restoring voltage at the distribution levels, hence, restoring load. The rising load keeps depleting the reactive power reserves. Transmission line currents increase and so do the reactive losses. The reactive power supplied by shunt capacitors and lines decreases due to the low voltage because reactive power is proportional to square of the voltage:

$$MVAR = \frac{kV^2}{Xc}$$

When the voltage dips to say 70% (0.7 PU), the output of capacitor bank will reduce to nearly 49% (i.e. 0.72 =0.49). Therefore under disturbed conditions of faults/dips the capacitors do not come up to the instantaneous need of quick injection of VARs into the system. The tap changers are also manual and even if they are changeable on-load (OLTR) they are too slow for quick restoration of voltage.

Other automatically controlled reactive reserves that respond rapidly to voltage deviations are typically the synchronous generators. There is limited local generation of VARs through some power plants that are available in PESCO area. When generators in the PESCO area reach their reactive power limits, the supply of reactive power generation will shift to more distant plants, such as Tarbela, Ghazi Brotha , Mangla, Kot Addu, Muzaffargarh, Guddu , Jamshoro and HubCo, hence contributing to further voltage drops as discussed earlier. (In the limit, those generators may also reach their limit, thus worsening the problem). This transient deficiency of VARs in PESCO system causes slow voltage recovery in case of disturbances on the main 500 kV

network supplying power to PESCO. The slow voltage recovery may lead to voltage collapse causing brown out or wider black out. Thus main symptoms that can lead to voltage collapse are:

- Low voltage profiles
- Heavy reactive power flows
- Inadequate reactive support
- Heavily loaded systems

9.1.2 Motor Stalling and Voltage Instability

The problem of voltage collapse normally occurs in heavily stressed systems. Voltage collapse is the progressive, uncontrollable drop in voltage following a change in the system condition.

While the events leading to voltage collapse may be caused by different disturbances, the key issue is the difficulty in balancing reactive power supply and demand (including losses). Voltage collapse is a process in which a voltage unstable system experiences an uncontrolled reduction in system voltage. Transient voltage collapse occurs over a much shorter time (takes less than 5 seconds from initial disturbance). It is normally caused by response of induction motor load.

When an induction motor is first started (or has stalled and is rebuilding speed) it may draw 5 to 8 times its normal MVAR to build magnetic field. The in-rush of MVAR to return the motors to rated speed may be enough to trigger a transient voltage collapse. This in-rush of reactive power typically lasts only a few seconds but can severely depress system voltages. If a severe voltage disturbance strikes a system with a heavy concentration of induction motors, during voltage drop induction motors will slow down. Once the system voltage start to recover the motor load will automatically try to pick up speed, but if the recovery of voltage is very slow then the motors would start stalling as the reacceleration torques of induction motor is proportional to square of the voltage. The Torque/Speed Curves shown in Fig. 9.1 explains this phenomenon.

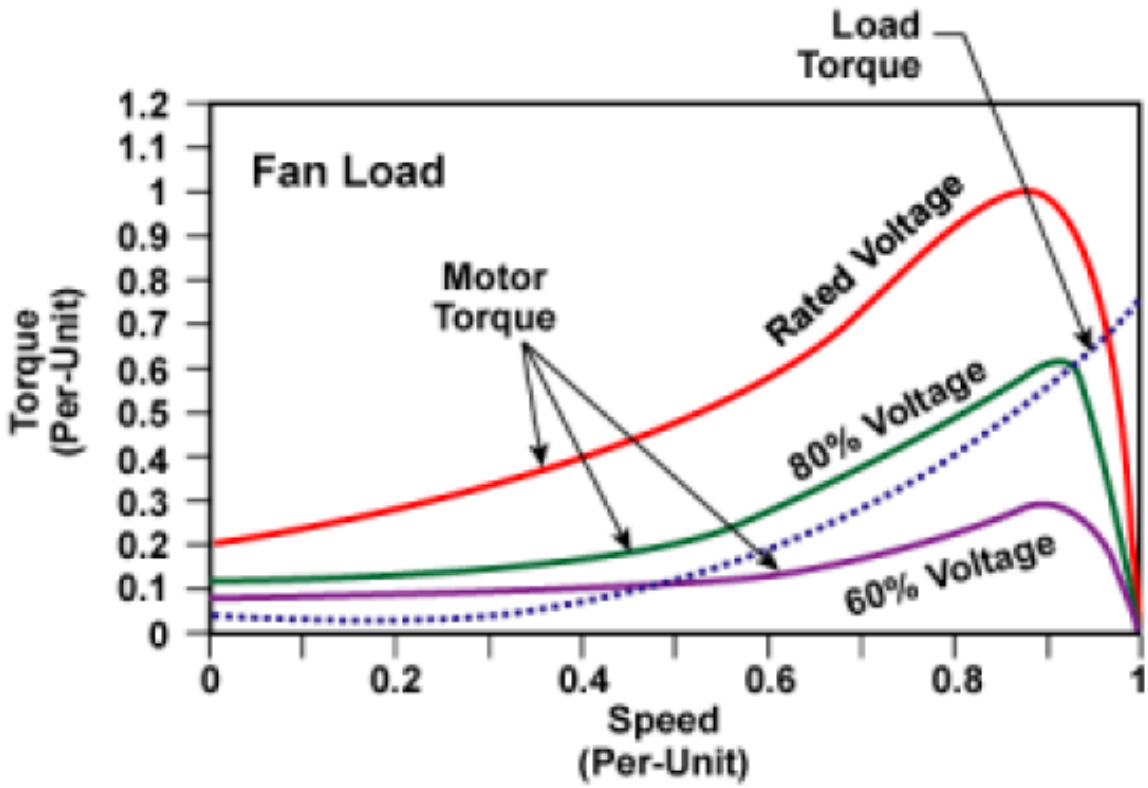

Fig. 9.1

9.2 Composition of Loads in PESCO

The latest Power Market Survey Report of NTDC for Electricity Demand Forecast of PESCO indicates the category wise percentage sale for the years 1999-00, 2005-06 and 2011-12 as given in Figure 9.2. The share of domestic sector and industrial sector was 64.68% and 25.16% (M & L and small industries) respectively with respect to total sale in the year 2011-12.

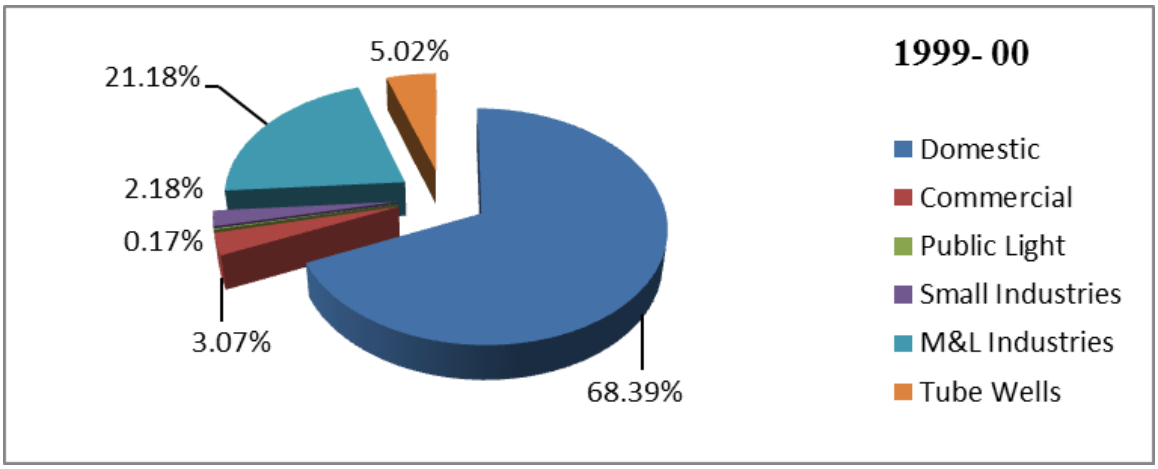

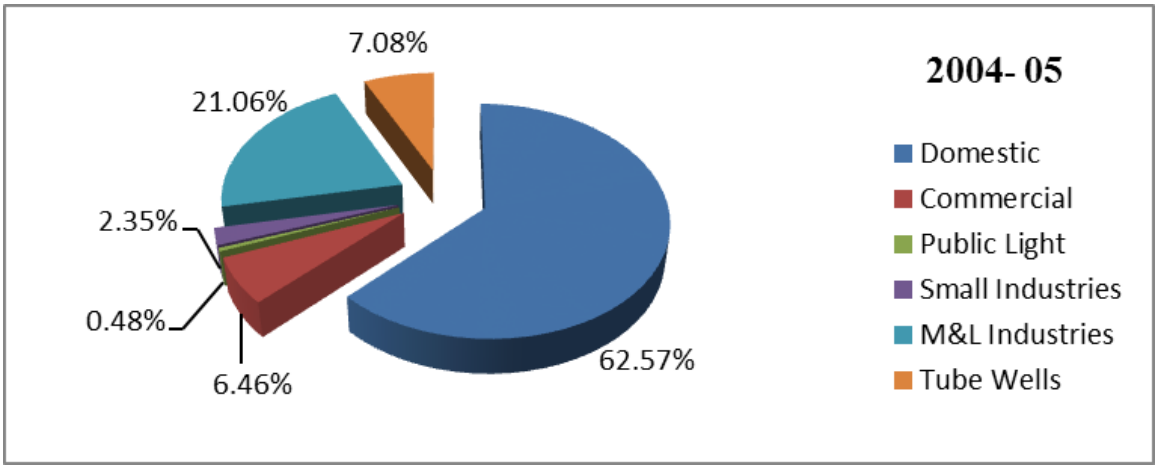

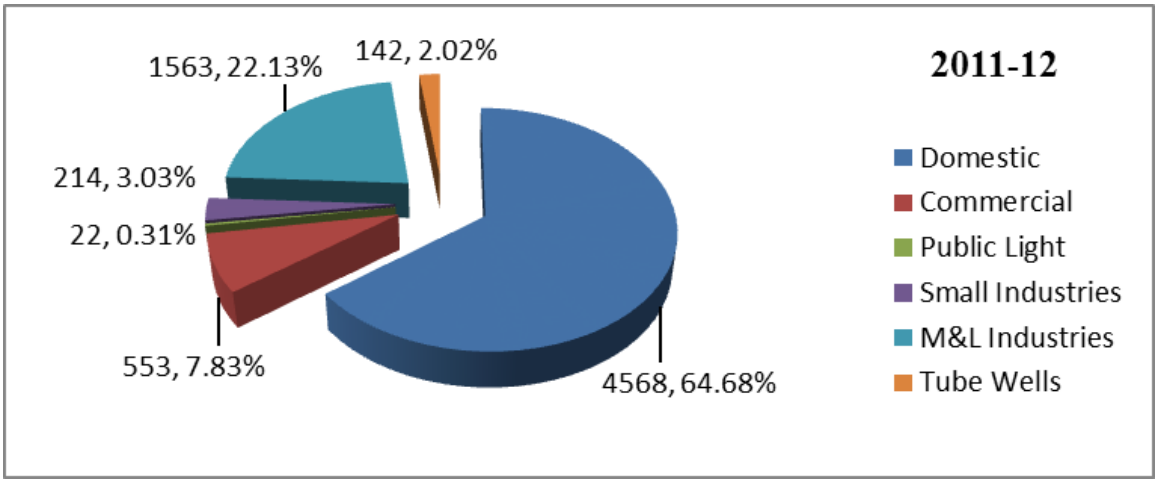

Fig 9.2

It is to be noted that maximum component of domestic and commercial loads now constitute air conditioning, refrigeration and other small motor loads. The load composition also indicates that medium to large industrial load (M & L) component is quite significant i.e. 22.13% and that too comprises sizeable medium to large motor loads. The other categories such as tube well and small industries also comprise motor loads. Based on the significantly high growth of motor

loads in PESCO system, we have developed a load model to represent the dynamic load conditions in the transient/dynamic simulations using the composite load model CLODAR of dynamic model library of software PSS/E as shown in Table 10.1.

Table 10.1

Load Type	Percentage
Large Motors	5%
Small Motors	60%
Transformer Exciting Current	1%
Discharge Lighting	10%
Constant Power	15%
Constant Impedance	9%

9.3 Assumptions in Dynamic Stability Analysis of PESCO System

Summer peak conditions of June 2015 were studied when the diversified peak demand of Peshawar Distribution Area, as forecasted by PESCO/NTDC (PMS), would be nearly 2865 MW. The capacitors at 11 kV and 132 kV as optimized for 2015 for normal and contingency conditions analyzed earlier in this Report i.e. 1368.8 MVAR at 11 kV and 242.4 MVAR at 132 kV were assumed connected. The voltage profile under steady state conditions was within ± 5% off-nominal voltage criteria at 132 kV and 66 kV bus bars of the system whereas all kV bus bars maintained nominal 100% (1.0 PU) or higher upto + 5%. The dynamic load model CLODAR of PSS/E model library was used to model all the loads of PESCO.

9.4 Dynamic Stability Analysis of PESCO System with No SVC

Base case dynamic stability analysis was carried out without any SVC in PESCO area. The simulations have been run for first one second without any disturbance to ascertain that the system was fine in pre-fault steady state condition. For worst case scenario, the disturbance was created at 500 kV system as follows:

- Three phase fault at Peshawar 500 kV bus
- Fault cleared in 5 cycles (100 ms)
- Trip Tarbela-Peshawar 500 kV single circuit

We monitored the following variables for 9 seconds after fault clearing:

- Voltage at significant bus bars of 220 kV, 132 kV and 11 kV
- Small motor speed at load buses of 11 kV (i.e. mostly air-conditioning loads)

The results have been plotted and attached in Appendix G-1. The voltages plotted in Fig. 1.1 indicate very poor voltage response; the voltage at 220 kV bus bars of Peshawar, Shahibagh, Daudkhel and Bannu could not recover to 0.9 PU. Other plots in Fig. 1.2 to Fig.1.14 show that voltage at 132 kV bus bars in PESCO area remain nearly at or below 0.75 PU and the voltages fail to recover to acceptable levels of minimum of 90% off-nominal. This means that the simple switched shunt capacitor banks for PF correction will not be able to rescue the system from voltage collapse under transient disturbances on the main national grid.

The situation at 11 kV load bus bars is even worst; the voltages monitored 3 seconds after the clearance of fault indicate the following PU voltages:

Buses with voltage less than 0.8000 after 3 seconds of clearance of fault:

BUS#	BUS NAME	BASKV	V(PU)	V(KV)	BUS#	BUS NAME	BASKV	V(PU)	V(KV)
1069	DOBIAN	132	0.7249	95.684	1070	MARDAN	132	0.7613	100.49
1072	HUSSAI	132	0.6872	90.704	1074	MARDAN II	132	0.7402	97.705
1075	KATLANG	132	0.721	95.173	1077	MARDAN-SP	132	0.7783	102.73
1078	DAGGAR	132	0.6062	80.014	1080	SWABI	132	0.7466	98.554
1090	CHARSADA	132	0.7153	94.418	1095	RAJJAR	132	0.6871	90.698
1100	PPCCHARS	132	0.715	94.386	1110	TANGI	132	0.6674	88.093
1115	SHABQDAR	132	0.6716	88.657	1118	JALALA	132	0.6776	89.443
1120	DARGAI	132	0.7512	99.159	1122	MALAKAND III	132	0.7533	99.432
1123	DARGAI P	132	0.7512	99.163	1125	TIMERGARA	132	0.6935	91.54
1130	CHAKDARA	132	0.6736	88.92	1140	SWAT	132	0.6085	80.324
1142	K.KHELA	132	0.5889	77.734	1144	MADYAN	132	0.5887	77.705
1146	SHANGLAP	132	0.5846	77.163	1150	JEHANGRA	132	0.7837	103.44
1165	NOWSHCTY	132	0.7484	98.79	1168	LOCOMOTV	132	0.7482	98.764
1170	NOWSHR-I	132	0.7495	98.928	1175	CHERATCE	132	0.7438	98.186
1180	PABBI	132	0.6997	92.357	1185	PESH CTY	132	0.6816	89.969
1187	DALZAK	132	0.7056	93.14	1189	SHAIBG-N	132	0.712	93.986
1190	SHAHIBAGH	132	0.7017	92.618	1192	SAKHI-CH	132	0.703	92.794
1196	PESHFORT	132	0.6929	91.462	1200	WARSAK P	132	0.7221	95.322
1210	WARSAK	132	0.717	94.643	1240	JAMRUD-I	132	0.6283	82.938
1245	HAYATABD	132	0.6333	83.592	1257	R-BABA	132	0.6866	90.629
1260	PESHCANT	132	0.6365	84.012	1270	PESH UNI	132	0.6217	82.059
1280	PESH.IND	132	0.6173	81.48	1290	SHMUHDI-2	132	0.6768	89.333
1291	SHMUHDI-1	132	0.7041	92.941	1294	MATANI	132	0.6819	90.011
1300	KOHAT	132	0.7409	97.8	1301	KOHAT-SP	132	0.6744	89.02
1302	GURGURI	132	0.6993	92.308	1303	HANGU	66	0.7024	46.36
1305	KOHATCEM	132	0.7334	96.81	1306	K.T SHIP	132	0.6781	89.506
1307	GUMBAT	132	0.7304	96.407	1312	HANGU	132	0.6591	86.995
1315	TALL	132	0.6888	90.922	1316	TALL	66	0.6971	46.011
1320	LACHI	132	0.7027	92.763	1332	BANNU-N	132	0.7017	92.629
1335	KARAK	132	0.6681	88.187	1336	SABIR ABAD	132	0.6582	86.884
1338	SIRAJ BABA	132	0.6648	87.75	1340	BANNU	132	0.6723	88.747
1344	T-MIRALI	132	0.6246	82.445	1345	S.NURANG	132	0.6677	88.134
1440	TARBELA-R	132	0.7899	104.27	1445	G.AMAZAI	132	0.775	102.3
1448	PEHUR POWER	132	0.7759	102.41	1460	TANK	132	0.6861	90.56
1461	GOMAL-ZAM	132	0.7159	94.494	1520	SHABQDAR	66	0.6826	45.052
1570	KHESHKI	66	0.7475	49.337	1580	NSR CITY	66	0.7482	49.382
1600	SHAHIBAG	66	0.6939	45.796	1601	T-SSPS	66	0.6783	44.77
1620	BADABER	66	0.6645	43.854	1622	DB-BDBER	66	0.685	45.208
1670	TIMRGARH	66	0.6431	42.442	1675	WARAI	66	0.5403	35.657
1690	DIR	66	0.4856	32.051	1691	DIR	33	0.4246	14.013

1700	KOHAT	66	0.7405	48.872	1780	BANNU	66	0.6014	39.689
1790	KRM.GRHI	66	0.5738	37.87	1830	PEZU	132	0.6765	89.296
1870	KULACHI	132	0.6881	90.831	1880	DARABAN	132	0.6558	86.57
1890	BUNDKURI	66	0.6038	39.848	1910	HAVELIAN	66	0.6254	41.274
1920	T-HAVLAN	66	0.6545	43.199	1930	HARIPUR	66	0.7336	48.415
5011	SHISHI	33	0.3955	13.052	5012	DAROSH	33	0.3954	13.049
5015	TAJAZAI	132	0.6723	88.741	5017	RESHUN	33	0.3913	12.912
5019	JUTILIST	33	0.3903	12.878	7415	T-PAROVA	132	0.7013	92.566
7420	PAROVA	132	0.7007	92.493	7424	D.I.KH GOMAL	132	0.7111	93.86
7430	D.I.KHAN	132	0.7215	95.239	7985	D.I.KHAN	66	0.6862	45.289
10691	DOBIAN-T1	11	0.6985	7.684	10692	DOBIAN-T2	11	0.7007	7.708
10701	MARDAN-T1	11	0.6936	7.629	10702	MARDAN-T2	11	0.6847	7.531
10721	HUSSAI-T1	11	0.5955	6.55	10722	HUSSAI-T2	11	0.5971	6.568
10741	MARDAN 2-T1	11	0.661	7.271	10742	MARDAN 2-T2	11	0.6595	7.255
10751	KATLANG-T1	11	0.6574	7.231	10752	KATLANG-T2	11	0.6472	7.12
10781	DAGGAR-T1	11	0.5332	5.866	10782	DAGGAR-T2	11	0.5229	5.751
10783	DAGGAR-T3	11	0.5176	5.694	10801	SWABI-T1	11	0.7173	7.891
10802	SWABI-T2	11	0.7199	7.919	10803	SWABI-T3	11	0.72	7.92
10901	CHARSADA-T1	11	0.6332	6.965	10902	CHARSADA-T2	11	0.6379	7.017
10903	CHARSADA-T3	11	0.6291	6.92	10951	RAJJAR-T1	11	0.6484	7.132
10952	RAJJAR-T2	11	0.6478	7.125	11001	PPCCHARS-T1	11	0.6851	7.536
11101	TANGI-T1	11	0.6133	6.746	11102	TANGI-T2	11	0.6116	6.727
11103	TANGI-T3	11	0.6162	6.778	11151	SHABQADAR-T3	11	0.5727	6.3
11152	SHABQADAR-T4	11	0.5766	6.343	11153	SHABQADAR-T5	11	0.5722	6.294
11181	JALALA-T3	11	0.6022	6.625	11182	JALALA-T4	11	0.6004	6.605
11183	JALALA-T5	11	0.6073	6.68	11201	DARGAI-T1	11	0.6093	6.702
11202	DARGAI-T2	11	0.5966	6.563	11203	DARGAI-T3	11	0.6003	6.604
11251	TIMERGARA-T2	11	0.6166	6.783	11252	TIMERGARA-T3	11	0.6068	6.675
11253	TIMERGARA-T4	11	0.6144	6.759	11301	CHAKDARA-T2	11	0.5948	6.543
11302	CHAKDARA-T3	11	0.5924	6.516	11303	CHAKDARA-T4	11	0.5807	6.387
11401	SWAT-T1	11	0.5272	5.8	11402	SWAT-T2	11	0.529	5.819
11403	SWAT-T3	11	0.5328	5.861	11405	SWAT-T5	11	0.5241	5.765
11421	K.KHELA-T1	11	0.5308	5.839	11422	K.KHELA-T2	11	0.5245	5.77
11441	MADYAN-T1	11	0.6007	6.607	11442	MADYAN-T2	11	0.6007	6.607
11461	SANGLAP-T1	11	0.5142	5.657	11501	JEHANGRA-T1	11	0.7332	8.065
11502	JEHANGRA-T2	11	0.7497	8.247	11503	JEHANGRA-T3	11	0.7339	8.073
11601	NIZAMPUR-T1	11	0.7827	8.61	11651	NOWSHCITY-T1	11	0.705	7.755
11652	NOWSHCITY-T3	11	0.7027	7.729	11653	NOWSHCITY-T4	11	0.6838	7.522
11701	NOWSHR I-T1	11	0.7023	7.725	11702	NOWSHR I-T2	11	0.7022	7.724
11703	NOWSHR I-T3	11	0.6814	7.495	11801	PABBI-T1	11	0.6253	6.878
11802	PABBI-T2	11	0.6244	6.868	11803	PABBI-T3	11	0.6293	6.923
11851	PESH CITY-T1	11	0.5793	6.372	11852	PESH CITY-T2	11	0.5731	6.304
11853	PESH CITY-T3	11	0.5727	6.299	11871	DALZAK-T1	11	0.6332	6.966
11872	DALZAK-T2	11	0.6257	6.882	11891	SHAIBG N-T1	11	0.6347	6.981
11892	SHAIBG N-T2	11	0.6347	6.981	11902	SHAHIBAGH-T3	11	0.6211	6.832

11903	SHAHIBAGH-T5	11	0.6228	6.851	11904	SHAHIBAGH-T6	11	0.6114	6.725
11921	SAKHI CH-T1	11	0.6464	7.11	11922	SAKHI CH-T2	11	0.6476	7.124
11923	SAKHI CH-T3	11	0.6419	7.061	11961	PESH FRT-T1	11	0.5868	6.455
11962	PESH FRT-T2	11	0.5866	6.453	12101	WARSAK-T1	11	0.6468	7.115
12102	WARSAK-T2	11	0.6483	7.132	12103	WARSAK-T3	11	0.6502	7.152
12401	JAMRUD I-T1	11	0.527	5.797	12402	JAMRUD I-T2	11	0.5277	5.805
12403	JAMRUD I-T3	11	0.53	5.829	12404	JAMRUD I-T4	11	0.5321	5.853
12451	HAYATABD-T1	11	0.5755	6.331	12452	HAYATABD-T2	11	0.5703	6.273
12453	HAYATABD-T3	11	0.5689	6.258	12571	R BABA-T1	11	0.6026	6.628
12572	R BABA-T2	11	0.6067	6.674	12573	R BABA-T3	11	0.615	6.765
12601	PESHCANT-T1	11	0.5622	6.184	12602	PESHCANT-T2	11	0.5626	6.188
12603	PESHCANT-T3	11	0.5637	6.201	12604	PESHCANT-T4	11	0.5601	6.161
12701	PESH UNIV-T1	11	0.5409	5.95	12702	PESH UNIV-T2	11	0.5456	6.001
12703	PESH UNIV-T3	11	0.5467	6.014	12801	PESH IND-T1	11	0.5024	5.526
12802	PESH IND-T2	11	0.5026	5.529	12803	PESH IND-T3	11	0.5044	5.548
12901	SHMUHDI-T1	11	0.5401	5.941	12902	SHMUHDI-T2	11	0.5401	5.941
12941	MATANI-T2	11	0.6129	6.742	12942	MATANI-T3	11	0.6113	6.724
12943	MATANI-T4	11	0.6131	6.744	13001	KOHAT-T4	11	0.6398	7.038
13011	KOHAT SP-T1	11	0.5711	6.282	13012	KOHAT SP-T2	11	0.5687	6.255
13021	GURGURI-T1	11	0.6297	6.927	13061	K.T SHIP-T1	11	0.5297	5.827
13062	K.T SHIP-T2	11	0.5246	5.771	13071	GUMBAT-T1	11	0.6662	7.328
13072	GUMBAT-T2	11	0.6672	7.339	13121	HANGU-T1	11	0.5939	6.533
13122	HANGU-T2	11	0.5939	6.533	13151	TALL-T2	11	0.6305	6.935
13152	TALL-T3	11	0.6305	6.935	13201	LACHI-T1	11	0.6222	6.844
13202	LACHI-T2	11	0.6152	6.767	13321	BANNU N-T1	11	0.5744	6.318
13322	BANNU N-T2	11	0.5744	6.318	13351	KARAK-T1	11	0.6041	6.645
13352	KARAK-T2	11	0.6041	6.645	13353	KARAK-T3	11	0.6041	6.645
13361	SABIR ABD-T1	11	0.5543	6.097	13381	SIRAJ BBA-T1	11	0.6293	6.923
13382	SIRAJ BBA-T2	11	0.6313	6.944	13401	BANNU-T3	11	0.5995	6.594
13402	BANNU-T4	11	0.6004	6.604	13403	BANNU-T5	11	0.5743	6.317
13451	S NURANG-T1	11	0.5815	6.397	13452	S NURANG-T2	11	0.5756	6.332
13453	S NURANG-T3	11	0.58	6.38	14401	TARBELA R-T1	11	0.7838	8.622
14402	TARBELA R-T2	11	0.7844	8.628	14403	TARBELA R-T3	11	0.7799	8.579
14451	G.AMAZAI-T1	11	0.7058	7.763	14452	G.AMAZAI-T2	11	0.7053	7.758
14453	G.AMAZAI-T3	11	0.7053	7.758	14601	TANK-T4	11	0.6268	6.895
14602	TANK-T6	11	0.6268	6.895	14603	TANK-T7	11	0.6268	6.895
15701	KHESHKI-T1	11	0.7427	8.17	16201	BADABER-T1	11	0.6196	6.816
16202	BADABER-T2	11	0.605	6.655	16701	TIMRGARH-T1	11	0.5756	6.332
16702	TIMRGARH-T2	11	0.5349	5.884	16751	WARAI-T1	11	0.4273	4.7
16901	DIR-T1	11	0.4368	4.804	16902	DIR-T2	11	0.4688	5.157
17901	KRM.GRHI-T1	11	0.4911	5.402	17902	KRM.GRHI-T2	11	0.535	5.885
18301	PEZU-T1	11	0.6572	7.229	18302	PEZU-T2	11	0.6529	7.182
18701	KULACHI-T1	11	0.6539	7.192	18801	DARABAN-T1	11	0.6073	6.681
18901	BUNDKARI-T1	11	0.5594	6.153	18902	BUNDKARI-T2	11	0.5111	5.622
19101	HAVELIAN-T1	11	0.5792	6.371	19102	HAVELIAN-T2	11	0.5365	5.902

19301	HARIPUR-T2	11	0.7155	7.871	19302	HARIPUR-T3	11	0.6666	7.333
50121	DAROSH-T1	11	0.3725	4.097	50151	TAJAZAI-T1	11	0.6242	6.866
50152	TAJAZAI-T2	11	0.6252	6.877	50162	TAJAZAI-T2	11	0.7979	8.777
50191	JUTILIST-T1	11	0.3659	4.025	50192	JUTILIST-T2	11	0.3659	4.025
74201	PAROVA-T1	11	0.6841	7.525	74202	PAROVA-T2	11	0.6934	7.628
74203	PAROVA-T3	11	0.6805	7.486	74241	D.I.KH GM-T1	11	0.7039	7.743
74242	D.I.KH GM-T2	11	0.6994	7.694	74301	D.I.KHAN-T1	11	0.6638	7.302
74302	D.I.KHAN-T3	11	0.6699	7.369	74303	D.I.KHAN-T4	11	0.6638	7.302

It is revealed that almost all the 11 kV bus bars do not recover voltage more than 60-70% off-nominal and this is voltage-unstable case. Just to highlight the motor stalling phenomenon, we have plotted some results of stability simulations for voltage and the speeds of AC motors at some typical 11 kV load bus bars representing different areas in PESCO 132 kV network as described below:

Fig. 1.2	Voltage and Motor Speed at Shahibagh
Fig. 1.3	Voltage and Motor Speed at Charsadda
Fig. 1.4	Voltage and Motor Speed at Mardan
Fig. 1.5	Voltage and Motor Speed at Peshawar City
Fig. 1.6	Voltage and Motor Speed at Peshawar Fort
Fig. 1.7	Voltage and Motor Speed at Jamrud
Fig. 1.8	Voltage and Motor Speed at Peshawar University
Fig. 1.9	Voltage and Motor Speed at Kohat
Fig. 1.10	Voltage and Motor Speed at Karak
Fig. 1.11	Voltage and Motor Speed at Lachi
Fig. 1.12	Voltage and Motor Speed at Tajazai
Fig. 1.13	Voltage and Motor Speed at Tank
Fig. 1.14	Voltage and Motor Speed at Bannu

It can be clearly seen that the voltages on 11 kV bus bars do not recover to more than 65 to 70% off-nominal voltage and the motors' speed keep on dropping down never to recover. This is typical voltage instability due to motor stalling phenomenon or vice a versa. Therefore it is evident that simple shunt capacitor banks do not provide enough reactive power support PESCO to stand up to face the worst 3-phase fault disturbance at 500 kV system. It needs SVC or SVCs to be installed in PESCO.

9.5 Dynamic Stability Analysis of PESCO System with SVC of 250 MVAR at Shahibagh

Following factors are considered while selecting the site and size of the SVC:

- To be located in the heart of the network of lowest voltage sag

- Central position amongst the load center with high VAR demand but distant from VAR generating sources such as Generating Plants and existing SVCs
- Availability of enough space i.e. approximately 60 x 40 meters near the switchyard of 132 kV with availability of line bay to connect the SVC at 132 kV level
- Clean environment to avoid damage to sensitive equipment involved in SVC. The grid stations near the sewage drains are totally discarded from site selection process
- Reasonably enough number of 132 kV circuits emanating from this site to cater for VAR supply to many neighboring grid stations when quick or swift injection of VAR is required.

Keeping in view of these factors we find that grid stations with very high load density in Peshawar 132 kV ring may qualify as the first instance. Shahibagh 132 kV grid station lie in the in the very heart of the Peshawar network from where VARs can be injected not only into Peshawar 132 kV ring but also VARs would flow towards Nowshera, Mardan and Shabqadar because nine 132 kV circuits are emanating from here in all directions in the city center. Availability of space was confirmed by GSO PESCO at these locations, there is enough space available near 132 kV switchyard with space of a line bay. A reasonable size that this site with nine 132 kV circuits could afford is 200 to 250 MVAR.

Dynamic stability simulation was carried out with an SVC of 250 MVAR at Shahibagh. The worst case disturbance was applied as follows:

- Three phase fault at Peshawar 500 kV bus
- Fault cleared in 5 cycles (100 ms)
- Trip Tarbela-Peshawar 500 kV single circuit

The results of the simulation with 250 MVAR are reported here and plotted in Appendix G-2.

The voltages plotted in Fig. 2.1 indicate still very poor voltage response; the voltage at 220 kV bus bars of Peshawar, Shahibagh, Daudkhel and Bannu could not recover to 0.9 PU. The proposed SVC of 250 MVAR at Shahibagh gave its full output of 0.25 PU (i.e. 250 MVAR at 1.0 PU voltage) as shown in Fig. 2.2, but still the voltages fail to recover to acceptable levels of minimum of 90% off-nominal. Other plots in Fig. 2.3 to Fig.2.14 show that voltage at 132 kV bus bars in PESCO area remain nearly at or below 0.75 PU and the voltages fail to recover to acceptable levels of minimum of 90% off-nominal. This means that the proposed SVC of 250 MVAR at Shahibagh would not be adequate to fully cater the dynamic VAR requirements of PESCO network.

The situation at 11 kV load bus bars is also worst; the voltages monitored 3 seconds after the clearance of fault indicate the following PU voltages:

Buses with voltage less than 0.8000 after 3 seconds of clearance of fault:

BUS#	BUS NAME	BASKV	V(PU)	V(KV)	BUS#	BUS NAME	BASKV	V(PU)	V(KV)
1069	DOBIAN	132	0.7917	104.51	1072	HUSSAI	132	0.7515	99.203
1075	KATLANG	132	0.797	105.2	1078	DAGGAR	132	0.6642	87.672
1090	CHARSADA	132	0.7952	104.97	1095	RAJJAR	132	0.7699	101.62
1100	PPCCHARS	132	0.7951	104.95	1110	TANGI	132	0.7502	99.032
1115	SHABQDAR	132	0.7515	99.195	1118	JALALA	132	0.7387	97.506
1125	TIMERGARA	132	0.7385	97.477	1130	CHAKDARA	132	0.7272	95.997

1140	SWAT	132	0.6581	86.865	1142	K.KHELA	132	0.6372	84.113
1144	MADYAN	132	0.637	84.082	1146	SHANGLAP	132	0.6326	83.504
1180	PABBI	132	0.77	101.64	1185	PESH CTY	132	0.7495	98.938
1187	DALZAK	132	0.7902	104.31	1189	SHAIBG-N	132	0.7919	104.54
1190	SHAHIBAGH	132	0.7879	104	1192	SAKHI-CH	132	0.7881	104.03
1196	PESHFORT	132	0.7785	102.77	1200	WARSAK P	132	0.799	105.47
1210	WARSAK	132	0.7958	105.04	1240	JAMRUD-I	132	0.6905	91.152
1245	HAYATABD	132	0.6951	91.754	1257	R-BABA	132	0.7463	98.515
1260	PESHCANT	132	0.7027	92.753	1270	PESH UNI	132	0.6835	90.219
1280	PESH.IND	132	0.6762	89.257	1290	SHMUHDI-2	132	0.7369	97.273
1291	SHMUHDI-1	132	0.756	99.788	1294	MATANI	132	0.7305	96.427
1300	KOHAT	132	0.7745	102.24	1301	KOHAT-SP	132	0.7189	94.893
1302	GURGURI	132	0.7286	96.172	1303	HANGU	66	0.7355	48.542
1305	KOHATCEM	132	0.768	101.38	1306	K.T SHIP	132	0.7215	95.238
1307	GUMBAT	132	0.7642	100.87	1312	HANGU	132	0.7016	92.612
1315	TALL	132	0.7192	94.94	1316	TALL	66	0.7291	48.123
1320	LACHI	132	0.733	96.763	1332	BANNU-N	132	0.7245	95.633
1335	KARAK	132	0.6926	91.423	1336	SABIR ABAD	132	0.6824	90.081
1338	SIRAJ BABA	132	0.6892	90.978	1340	BANNU	132	0.6951	91.749
1344	T-MIRALI	132	0.6486	85.609	1345	S.NURANG	132	0.6882	90.847
1460	TANK	132	0.7033	92.835	1461	GOMAL-ZAM	132	0.7334	96.806
1520	SHABQDAR	66	0.7655	50.52	1600	SHAHIBAG	66	0.7848	51.799
1601	T-SSPS	66	0.769	50.757	1620	BADABER	66	0.7541	49.771
1622	DB-BDBER	66	0.7758	51.201	1670	TIMRGARH	66	0.6857	45.257
1675	WARAI	66	0.5767	38.06	1690	DIR	66	0.5187	34.231
1691	DIR	33	0.4552	15.02	1700	KOHAT	66	0.7743	51.106
1780	BANNU	66	0.6222	41.064	1790	KRM.GRHI	66	0.5935	39.171
1830	PEZU	132	0.6947	91.707	1870	KULACHI	132	0.7037	92.885
1880	DARABAN	132	0.6709	88.558	1890	BUNDKURI	66	0.6156	40.628
1910	HAVELIAN	66	0.6625	43.724	1920	T-HAVLAN	66	0.6928	45.728
1930	HARIPUR	66	0.7751	51.157	5011	SHISHI	33	0.4231	13.963
5012	DAROSH	33	0.423	13.959	5015	TAJAZAI	132	0.6919	91.33
5017	RESHUN	33	0.4182	13.8	5019	JUTILIST	33	0.4171	13.766
7415	T-PAROVA	132	0.7169	94.633	7420	PAROVA	132	0.7164	94.566
7424	D.I.KH GOMAL	132	0.726	95.829	7430	D.I.KHAN	132	0.7351	97.029
7985	D.I.KHAN	66	0.6994	46.158	10691	DOBIAN-T1	11	0.7868	8.655
10692	DOBIAN-T2	11	0.7884	8.672	10701	MARDAN-T1	11	0.7948	8.743
10702	MARDAN-T2	11	0.787	8.657	10721	HUSSAI-T1	11	0.6608	7.269
10722	HUSSAI-T2	11	0.6625	7.287	10741	MARDAN 2-T1	11	0.78	8.58
10742	MARDAN 2-T2	11	0.7789	8.568	10751	KATLANG-T1	11	0.7761	8.537
10752	KATLANG-T2	11	0.7652	8.417	10781	DAGGAR-T1	11	0.5868	6.455
10782	DAGGAR-T2	11	0.5753	6.329	10783	DAGGAR-T3	11	0.5696	6.266
10901	CHARSADA-T1	11	0.761	8.371	10902	CHARSADA-T2	11	0.7669	8.436
10903	CHARSADA-T3	11	0.7563	8.32	10951	RAJJAR-T1	11	0.7596	8.356
10952	RAJJAR-T2	11	0.7596	8.355	11001	PPCCHARS-T1	11	0.7833	8.616

11101	TANGI-T1	11	0.7196	7.915	11102	TANGI-T2	11	0.7172	7.889
11103	TANGI-T3	11	0.7229	7.952	11151	SHABQADAR-T3	11	0.6476	7.123
11152	SHABQADAR-T4	11	0.6519	7.171	11153	SHABQADAR-T5	11	0.6469	7.115
11181	JALALA-T3	11	0.6719	7.391	11182	JALALA-T4	11	0.6692	7.361
11183	JALALA-T5	11	0.6772	7.449	11201	DARGAI-T1	11	0.7336	8.07
11202	DARGAI-T2	11	0.7097	7.806	11203	DARGAI-T3	11	0.7176	7.894
11251	TIMERGARA-T2	11	0.6701	7.371	11252	TIMERGARA-T3	11	0.6577	7.234
11253	TIMERGARA-T4	11	0.668	7.348	11301	CHAKDARA-T2	11	0.649	7.139
11302	CHAKDARA-T3	11	0.6462	7.108	11303	CHAKDARA-T4	11	0.6333	6.966
11401	SWAT-T1	11	0.5724	6.296	11402	SWAT-T2	11	0.5743	6.317
11403	SWAT-T3	11	0.5784	6.363	11405	SWAT-T5	11	0.5689	6.258
11421	K.KHELA-T1	11	0.5761	6.337	11422	K.KHELA-T2	11	0.5693	6.263
11441	MADYAN-T1	11	0.6501	7.151	11442	MADYAN-T2	11	0.6501	7.151
11461	SANGLAP-T1	11	0.5583	6.141	11653	NOWSHCITY-T4	11	0.7901	8.691
11703	NOWSHR I-T3	11	0.7829	8.611	11801	PABBI-T1	11	0.7213	7.935
11802	PABBI-T2	11	0.7195	7.915	11803	PABBI-T3	11	0.7273	8
11851	PESH CITY-T1	11	0.6413	7.054	11852	PESH CITY-T2	11	0.6345	6.98
11853	PESH CITY-T3	11	0.634	6.974	11871	DALZAK-T1	11	0.7588	8.347
11872	DALZAK-T2	11	0.7512	8.263	11891	SHAIBG N-T1	11	0.7545	8.299
11892	SHAIBG N-T2	11	0.7545	8.299	11902	SHAHIBAGH-T3	11	0.7502	8.253
11903	SHAHIBAGH-T5	11	0.7527	8.279	11904	SHAHIBAGH-T6	11	0.7362	8.098
11921	SAKHI CH-T1	11	0.7682	8.45	11922	SAKHI CH-T2	11	0.7691	8.46
11923	SAKHI CH-T3	11	0.7631	8.394	11961	PESH FRT-T1	11	0.6724	7.397
11962	PESH FRT-T2	11	0.6722	7.394	12101	WARSAK-T1	11	0.7665	8.432
12102	WARSAK-T2	11	0.7682	8.45	12103	WARSAK-T3	11	0.7711	8.482
12401	JAMRUD I-T1	11	0.5817	6.398	12402	JAMRUD I-T2	11	0.5825	6.407
12403	JAMRUD I-T3	11	0.5848	6.433	12404	JAMRUD I-T4	11	0.5872	6.459
12451	HAYATABD-T1	11	0.634	6.974	12452	HAYATABD-T2	11	0.6283	6.911
12453	HAYATABD-T3	11	0.6267	6.894	12571	R BABA-T1	11	0.6594	7.253
12572	R BABA-T2	11	0.664	7.304	12573	R BABA-T3	11	0.673	7.403
12601	PESHCANT-T1	11	0.6236	6.859	12602	PESHCANT-T2	11	0.6239	6.863
12603	PESHCANT-T3	11	0.6252	6.877	12604	PESHCANT-T4	11	0.6213	6.834
12701	PESH UNIV-T1	11	0.5969	6.566	12702	PESH UNIV-T2	11	0.6021	6.623
12703	PESH UNIV-T3	11	0.6034	6.637	12801	PESH IND-T1	11	0.5525	6.077
12802	PESH IND-T2	11	0.5528	6.081	12803	PESH IND-T3	11	0.5546	6.101
12901	SHMUHDI-T1	11	0.5909	6.5	12902	SHMUHDI-T2	11	0.5909	6.5
12941	MATANI-T2	11	0.6595	7.254	12942	MATANI-T3	11	0.6577	7.235
12943	MATANI-T4	11	0.6596	7.255	13001	KOHAT-T4	11	0.6731	7.404
13011	KOHAT SP-T1	11	0.611	6.722	13012	KOHAT SP-T2	11	0.6085	6.693
13021	GURGURI-T1	11	0.6577	7.235	13061	K.T SHIP-T1	11	0.5657	6.223
13062	K.T SHIP-T2	11	0.5603	6.163	13071	GUMBAT-T1	11	0.7075	7.783
13072	GUMBAT-T2	11	0.7082	7.791	13121	HANGU-T1	11	0.6343	6.977
13122	HANGU-T2	11	0.6343	6.977	13151	TALL-T2	11	0.6596	7.255
13152	TALL-T3	11	0.6596	7.255	13201	LACHI-T1	11	0.6513	7.164
13202	LACHI-T2	11	0.6439	7.083	13321	BANNU N-T1	11	0.5943	6.538

13322	BANNU N-T2	11	0.5943	6.538	13351	KARAK-T1	11	0.6275	6.902
13352	KARAK-T2	11	0.6275	6.902	13353	KARAK-T3	11	0.6275	6.902
13361	SABIR ABD-T1	11	0.5758	6.334	13381	SIRAJ BBA-T1	11	0.6535	7.189
13382	SIRAJ BBA-T2	11	0.6556	7.212	13401	BANNU-T3	11	0.6209	6.83
13402	BANNU-T4	11	0.6218	6.84	13403	BANNU-T5	11	0.5948	6.543
13451	S NURANG-T1	11	0.6004	6.605	13452	S NURANG-T2	11	0.5944	6.538
13453	S NURANG-T3	11	0.5989	6.588	14601	TANK-T4	11	0.6439	7.083
14602	TANK-T6	11	0.6439	7.083	14603	TANK-T7	11	0.6439	7.083
16201	BADABER-T1	11	0.7236	7.959	16202	BADABER-T2	11	0.701	7.711
16701	TIMRGARH-T1	11	0.6157	6.772	16702	TIMRGARH-T2	11	0.5723	6.295
16751	WARAI-T1	11	0.4571	5.029	16901	DIR-T1	11	0.4672	5.139
16902	DIR-T2	11	0.5012	5.513	17901	KRM.GRHI-T1	11	0.5085	5.593
17902	KRM.GRHI-T2	11	0.5538	6.092	18301	PEZU-T1	11	0.676	7.436
18302	PEZU-T2	11	0.6716	7.388	18701	KULACHI-T1	11	0.6704	7.374
18801	DARABAN-T1	11	0.6223	6.845	18901	BUNDKARI-T1	11	0.5708	6.279
18902	BUNDKARI-T2	11	0.5217	5.738	19101	HAVELIAN-T1	11	0.6164	6.78
19102	HAVELIAN-T2	11	0.5704	6.275	19301	HARIPUR-T2	11	0.7719	8.491
19302	HARIPUR-T3	11	0.7483	8.232	50121	DAROSH-T1	11	0.3987	4.386
50151	TAJAZAI-T1	11	0.6435	7.078	50152	TAJAZAI-T2	11	0.6445	7.09
50191	JUTILIST-T1	11	0.3914	4.305	50192	JUTILIST-T2	11	0.3914	4.305
74201	PAROVA-T1	11	0.7045	7.749	74202	PAROVA-T2	11	0.715	7.866
74203	PAROVA-T3	11	0.7008	7.709	74241	D.I.KH GM-T1	11	0.7277	8.004
74242	D.I.KH GM-T2	11	0.7231	7.954	74301	D.I.KHAN-T1	11	0.6823	7.505
74302	D.I.KHAN-T3	11	0.6886	7.575	74303	D.I.KHAN-T4	11	0.6823	7.505

We see that voltage recovery is slightly improved but not to the acceptable level that could avoid the motor stalling. Again to highlight the motor stalling phenomenon, we have plotted some results of stability simulations for voltage and the speeds of AC motors at some typical 11 kV load bus bars representing different areas of PESCO 132 kV system as described below:

Fig. 2.3 Voltage and Motor Speed at Shahibagh

Fig. 2.4 Voltage and Motor Speed at Charsadda

Fig. 2.5 Voltage and Motor Speed at Mardan

Fig. 2.6 Voltage and Motor Speed at Peshawar City

Fig. 2.7 Voltage and Motor Speed at Peshawar Fort

Fig. 2.8 Voltage and Motor Speed at Jamrud

Fig. 2.9 Voltage and Motor Speed at Peshawar University

Fig. 2.10 Voltage and Motor Speed at Kohat

Fig. 2.11 Voltage and Motor Speed at Karak

Fig. 2.12 Voltage and Motor Speed at Lachi

Fig. 2.13 Voltage and Motor Speed at Tajazai

Fig. 2.14 Voltage and Motor Speed at Tank

Fig. 2.15 Voltage and Motor Speed at Bannu

Again it is clearly seen that the voltages on 11 kV bus bars do not recover to more than 70 to 75% off-nominal voltage and the motors' speed keep on dropping down never to recover. Therefore it is evident that the proposed SVC of 250 MVAR at Shahibagh does not provide enough reactive power reserves to PESCO 132 kV network to withstand the worst 3-phase fault disturbance at 500 kV system. So we need additional SVC or SVCs to be installed in PESCO

9.6 Dynamic Stability Analysis of PESCO System with SVC of 250 MVAR at Shahibagh 132 kV and 250 MVAR at Kohat 132 kV

Another location which is in far south in PESCO and very heavily VAR deficient voltage sag area is Kohat, Bannu, Karak and further west and south. As confirmed by GSO PESCO, Kohat132 kV grid station has enough space to install SVC of 250 MVAR i.e. 60 x 40 meters near switchyard with a space of line bay available, and it has reasonable number of 132 kV circuits emanating to neighboring 132 kV grid stations with heavy VAR demand.

Dynamic stability simulation was carried out with an SVC of 250 MVAR at Kohat in addition to already proposed 250 MVAR at Shahibagh. The same worst case disturbance was repeated as follows:

- Three phase fault at Peshawar 500 kV bus
- Fault cleared in 5 cycles (100 ms)
- Trip Tarbela-Peshawar 500 kV single circuit

The results of the simulation are reported here and plotted in Appendix G-3.

The voltages plotted in Fig. 3.1 indicate good voltage response, the recovery of voltage at 220 kV bus bars of Peshawar, Shahibagh, Daudkhel and Bannu is much better than the previous case. The proposed SVCs each of 250 MVAR at Shahibagh and Kohat gave their full output of 0.25 PU (i.e. 250 MVAR at 1.0 PU voltage) each as shown in Fig. 3.2, to improve the voltage recovery. But still with improvement in post-fault voltage recovery we find many buses could not recover the voltage above 0.9 PU. This means that the proposed SVCs of 250 MVAR each at Shahibagh and Kohat would be inadequate to fully cater the dynamic VAR requirements of PESCO network under disturbed conditions at main primary grid of 500 kV feeding the PESCO loads.

Voltage recovery at many 11 kV load bus bars is still very poor and motors are still stalling to pull the voltages down. The voltages monitored 3 seconds after the clearance of fault indicate the following PU voltages:

Buses with voltage less than 0.80 PU after 3 seconds of clearance of fault:

BUS#	BUS NAME	BASKV	V(PU)	V(KV)	BUS#	BUS NAME	BASKV	V(PU)	V(KV)
1078	DAGGAR	132	0.7554	99.709	1140	SWAT	132	0.7615	100.51
1142	K.KHELA	132	0.7382	97.436	1144	MADYAN	132	0.738	97.415
1146	SHANGLAP	132	0.733	96.752	1240	JAMRUD-I	132	0.7869	103.87
1245	HAYATABD	132	0.7924	104.6	1260	PESHCANT	132	0.7984	105.39

1270	PESH UNI	132	0.7789	102.81	1280	PESH.IND	132	0.771	101.77
1670	TIMRGARH	66	0.7834	51.702	1675	WARAI	66	0.6599	43.555
1690	DIR	66	0.5941	39.209	1691	DIR	33	0.5249	17.322
1910	HAVELIAN	66	0.697	45.999	1920	T-HAVLAN	66	0.7281	48.055
5011	SHISHI	33	0.4857	16.029	5012	DAROSH	33	0.4856	16.026
5017	RESHUN	33	0.479	15.808	5019	JUTILIST	33	0.478	15.775
10781	DAGGAR-T1	11	0.6717	7.389	10782	DAGGAR-T2	11	0.6584	7.242
10783	DAGGAR-T3	11	0.6519	7.171	11401	SWAT-T1	11	0.6668	7.335
11402	SWAT-T2	11	0.6691	7.36	11403	SWAT-T3	11	0.6739	7.413
11405	SWAT-T5	11	0.6628	7.291	11421	K.KHELA-T1	11	0.671	7.381
11422	K.KHELA-T2	11	0.6631	7.294	11441	MADYAN-T1	11	0.7545	8.3
11442	MADYAN-T2	11	0.7545	8.3	11461	SANGLAP-T1	11	0.6505	7.155
11851	PESH CITY-T1	11	0.7769	8.546	11852	PESH CITY-T2	11	0.7674	8.441
11853	PESH CITY-T3	11	0.7622	8.384	12401	JAMRUD I-T1	11	0.6672	7.339
12402	JAMRUD I-T2	11	0.668	7.348	12403	JAMRUD I-T3	11	0.6704	7.375
12404	JAMRUD I-T4	11	0.6733	7.407	12451	HAYATABD-T1	11	0.7279	8.007
12452	HAYATABD-T2	11	0.7215	7.936	12453	HAYATABD-T3	11	0.7197	7.916
12601	PESHCANT-T1	11	0.7138	7.852	12602	PESHCANT-T2	11	0.7141	7.856
12603	PESHCANT-T3	11	0.7155	7.87	12604	PESHCANT-T4	11	0.7112	7.823
12701	PESH UNIV-T1	11	0.6842	7.526	12702	PESH UNIV-T2	11	0.6902	7.593
12703	PESH UNIV-T3	11	0.6917	7.609	12801	PESH IND-T1	11	0.6336	6.97
12802	PESH IND-T2	11	0.6341	6.976	12803	PESH IND-T3	11	0.636	6.996
12901	SHMUHDI-T1	11	0.6784	7.462	12902	SHMUHDI-T2	11	0.6784	7.462
13061	K.T SHIP-T1	11	0.7192	7.911	13062	K.T SHIP-T2	11	0.7121	7.833
16701	TIMRGARH-T1	11	0.7084	7.793	16702	TIMRGARH-T2	11	0.6577	7.235
16751	WARAI-T1	11	0.5252	5.778	16901	DIR-T1	11	0.5366	5.902
16902	DIR-T2	11	0.5751	6.327	17901	KRM.GRHI-T1	11	0.7172	7.89
17902	KRM.GRHI-T2	11	0.7795	8.575	18901	BUNDKARI-T1	11	0.7827	8.609
18902	BUNDKARI-T2	11	0.7076	7.784	19101	HAVELIAN-T1	11	0.6547	7.202
19102	HAVELIAN-T2	11	0.6027	6.63	50121	DAROSH-T1	11	0.4582	5.04
50191	JUTILIST-T1	11	0.4489	4.938	50192	JUTILIST-T2	11	0.4489	4.938

We see that voltage recovery is improved and the number of buses with voltages less than 0.8 PU is reduced compared to the previous case. However still there is significant number of grid stations where the bus voltages could not attain the acceptable voltage level that could avoid the motor stalling. Again to highlight the motor stalling phenomenon, we have plotted some results of stability simulations for voltage and the speeds of AC motors at some typical 11 kV load bus bars representing different areas of PESCO 132 kV system as described below:

Fig. 3.3 Voltage and Motor Speed at Shahibagh

Fig. 3.4 Voltage and Motor Speed at Charsadda

Fig. 3.5 Voltage and Motor Speed at Mardan

Fig. 3.6 Voltage and Motor Speed at Peshawar City

Fig. 3.7 Voltage and Motor Speed at Peshawar Fort

Fig. 3.8	Voltage and Motor Speed at Jamrud
Fig. 3.9	Voltage and Motor Speed at Peshawar University
Fig. 3.10	Voltage and Motor Speed at Kohat
Fig. 3.11	Voltage and Motor Speed at Karak
Fig. 3.12	Voltage and Motor Speed at Lachi
Fig. 3.13	Voltage and Motor Speed at Tajazai
Fig. 3.14	Voltage and Motor Speed at Tank
Fig. 3.15	Voltage and Motor Speed at Bannu

The results indicate that voltages and motor speeds recover at Shahibagh, Charsadda, Mardan, Peshawar Fort, Kohat, Karak, Lachi, Tajazai, Tank and Bannu. The voltage and speed recovered at Peshawar City but the rate of recovery is very slow. But the voltage could not recover at Peshawar University and Jamrud and still the motors are stalling never to recover their speed and can pull the system down to collapse.

Therefore it is evident that the proposed SVCs of 250 MVAR at Shahibagh and Kohat are still deficient in providing enough reactive power reserves to PESCO 132 kV network to recover the voltage stability after the worst 3-phase fault disturbance at 500 kV system. So we need additional SVC or SVCs to be installed in PESCO

9.7 Dynamic Stability Analysis of PESCO System with SVC of 250 MVAR at Shahibagh 132 kV, 250 MVAR at Kohat 132 kV and 250 MVAR at Peshawar University 132 kV

To improve post fault voltage recovery and avoid motor stalling at Jamrud, Peshawar University and other locations west of Peshawar we propose another SVC of 250 MVAR at Peshawar University 132 kV grid station. The availability of space of 60 x 40 meters near switchyard with a space of line bay available is still to be confirmed by GSO PESCO. Four 132 kV circuits are emanating from here to neighboring 132 kV grid stations with heavy VAR demand, therefor the SVC at this location will provide good voltage support in western flank of Peshawar 132 kV ring.

Dynamic stability simulation was carried out with a SVCs of 250 MVAR at Peshawar University in addition to already proposed two SVCs of 250 MVAR each at Shahibagh and Kohat. The same worst case disturbance was repeated as follows:

- Three phase fault at Peshawar 500 kV bus
- Fault cleared in 5 cycles (100 ms)
- Trip Tarbela-Peshawar 500 kV single circuit

The results of the simulation are reported here and plotted in Appendix G-4.

The voltages plotted in Fig. 4.1 indicate good voltage response, the recovery of voltage at 220 kV bus bars of Peshawar, Shahibagh, Daudkhel and Bannu is further improved to attain more than 0.9 PU at all these bus bars. The proposed SVCs each of 250 MVAR at Peshawar University, Shahibagh and Kohat gave their full output of 0.25 PU (i.e. 250 MVAR at 1.0 PU voltage) each as shown in Fig. 4.2, to bring the post fault voltages above 0.9 PU.

We have scanned the voltages after 3 seconds of fault clearance to see if still there are some poor voltages i.e. less than 0.80 PU and the results are as follows:

BUS#	BUS NAME	BASKV	V(PU)	V(KV)	BUS#	BUS NAME	BASKV	V(PU)	V(KV)
1675	WARAI	66	0.7928	52.326	1690	DIR	66	0.7149	47.182
1691	DIR	33	0.6373	21.031	5011	SHISHI	33	0.5863	19.346
5012	DAROSH	33	0.5862	19.343	5017	RESHUN	33	0.5766	19.027
5019	JUTILIST	33	0.5756	18.995	10781	DAGGAR-T1	11	0.7767	8.543
10782	DAGGAR-T2	11	0.7592	8.352	10783	DAGGAR-T3	11	0.7466	8.212
16751	WARAI-T1	11	0.636	6.996	16901	DIR-T1	11	0.6491	7.14
16902	DIR-T2	11	0.6947	7.642	17901	KRM.GRHI-T1	11	0.7866	8.652
50121	DAROSH-T1	11	0.5541	6.095	50191	JUTILIST-T1	11	0.5415	5.957
50192	JUTILIST-T2	11	0.5415	5.957					

We find that 66 kV network of far flung areas of Warai, Dir and 33 kV of Darosh, Reshun etc. is still facing poor voltage recovery prone to motor stalling. But since these far flung areas with cool atmosphere even in summer do not have significant motor loads such as air conditioning etc., and may not face motor stalling. Also the network would be upgraded to 132 kV in future and voltage profile will be much improved. Therefore we don't propose further investment of installing any more SVCs.

9.8 Conceptual Design of the Proposed SVCs

The conceptual configuration of proposed 250 MVAR SVC at each of the proposed locations of Shahibagh, Kohat and Peshawar University will be as shown in Fig. 10.3 below. The final configuration and design/specifications will be developed after detailed studies and analysis at the bidding stage.

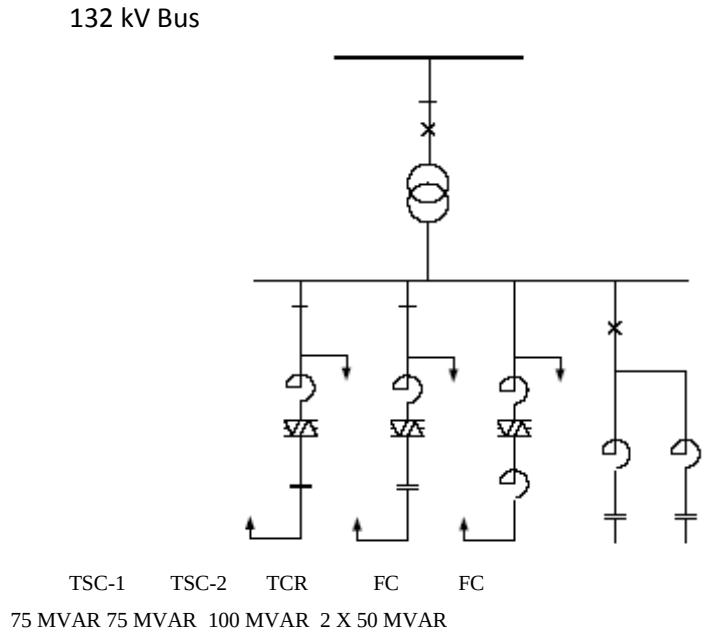

Fig.9. 3

The proposed components are:

SVC Transformer Rating	250 MVA
Filter Banks (FC)	Two Branches: Each of 50 MVAR
TCR	100 MVAR
TSC-1	75 MVAR
TSC_2	75 MVAR

9.9 Conclusion of Dynamic Stability Analysis

It is concluded that:

- Simple shunt capacitors for PF improvement in PESCO will not provide the dynamic reactive power requirements of PESCO.
- Three new SVCs would be required in 132 kV network of PESCO as follows:
  - Shahibagh 132 kV, 250 MVAR
  - Kohat 132 kV, 250 MVAR
  - Peshawar University 250 MVAR
- Enough space to accommodate the 250 MVAR SVC i.e. 40x60 meters near the switchyard of 132 kV with one line bay of 132 kV to connect the SVC at each of the above locations would be made available by PESCO.

10. Conclusions

- Additional capacitors of 942.5 MVARs are required at 11 kV to bring the voltage of all 11 kV bus bars at 1.0 PU (100%) voltage in 2015. OPF has found some of the capacitors at 132 kV superfluous and removed from its analysis. It retained 242.4 MVAR out of existing 287.2 MVAR at 132 kV. Total of 1368.8 MVAR including the existing and newly proposed are required at 11 kV in 2015 peak load conditions. Thus total requirement of compensation together at 11 kV and 132 kV in 2015 is **1611.2 MVAR.**
- Additional benefits gained from capacitor installations under the Peak Load Conditions of 2015 are as follows:
  - 35.7 MW reduction in Transmission losses
  - A reduction of 1112.34 MVA in the loading of Transmission Lines is realized.
  - A reduction of 373.31 MVA in the loading of HV/LV (132/11 kV, 66/11 kV and 33/11 kV) Transformers is attained.
- OPF was performed for off-peak load conditions (60% of the peak load) and it switched of most of the capacitor banks to avoid any over voltage and keep the bus voltages within the margin of 5% off-nominal.
- OPF was performed for the peak load conditions of 2018 and it was found that additional 277.6 MVAR are required at 11 kV. No additional capacitors are required at 132 kV. Thus total MVAR to be available in the network of PESCO by the year 2018, including the existing, the additional proposed in 2015 and 2018, put together would be **1888.8 MVAR**.
- The step sizes have been worked out to design switched shunt capacitor banks rather than having one fixed capacitor. The most common switching steps would be 1.2 MVAR, 2.4 MVAR or 3.6 MVAR. Maximum of five steps have been proposed on most of the substations. A voltage control strategy along with the set points for the PLC controller has been provided.
- To resolve the issue of inrush transient current and resonance of odd harmonics, detailed harmonic analysis has been carried out and appropriate sizes of detuning reactors have been calculated for each step size of capacitor bank corresponding to the 132/11 kV transformer MVA size at each grid station.
- Dynamic stability analysis has also been carried out. A composite load model has been assumed based on the percent composition of different categories of loads identified by the PMS Load Forecast Report of NTDC.
- To avoid motor stalling and voltage instability in case of very severe 3-Ph fault happening at main 500 kV grid system i.e. Tarbela-Peshawar 500 kV single circuit connected to Peshawar 500/220/132 kV grid station (Sh. Mohammadi), the dynamic stability analysis has concluded to have three SVCs to be connected at132 kV level at following grid stations:
  - Shahibagh 132 kV +250 MVAR (capacitive)
  - Kohat 132 kV +250 MVAR(capacitive)
  - Peshawar University 132 kV +250 MVAR(capacitive)

- The Study provides complete comprehensive Plan and Design for Reactive Power Compensation to boost voltage profile for steady state as well as dynamic/transient conditions in PESCO network.

Appendices

Appendix A

Existing Load Power Factors at 11 kV Bus Bars of PESCO Substations

Appendix-A

Reactive Power Compensation Study of PESCO

Existing Peak Load Power Factors at 11 KV Bus Bars

Sr. No.	Grid Station	T/F	July	Aug	Sep	Oct	Nov	Dec	Jan	Feb	Mar	Apr	May	June	Average PF	PF Rationalized
1	66KV KOHAT	T-1		0.00	0.00	0.00		0.00	0.00	0.00	0.00	0.00	0.00	0.00	0.00	0.85
		T-2	0.71	0.54	0.48	0.67	0.74	0.00	0.60	0.70	0.74	0.70	0.69	0.72	0.61	0.72
2	132KV GSS DALAZAK PESHAWAR	T-1	0.92	0.92	0.92	0.92	0.94	0.97	0.98	0.97	0.96	0.19	1.00	0.79	0.87	0.85
3	132KV GUMBAT-2	T-1	0.92	0.95	0.96	0.98	0.98	0.94	0.96	0.96	0.66	0.91	0.90	0.92	0.92	0.91
4	132KV GSS INDUSTRIAL ESTATE JAMRUD ROAD PESHAWAR	T-1	0.78	0.80	0.80	0.74	0.41	0.79	0.79	0.82	0.76	0.72	0.61	0.80	0.73	0.80
		T-2	0.80	0.84	0.78	0.81	0.82	0.84	0.83	0.85	0.74	0.82	0.83	0.89	0.82	0.82
		T-3	0.89	0.91	0.91	0.93	0.95	0.96	0.97	0.96	0.96	0.65	0.91	0.93	0.91	0.91
		T-4	0.92	0.70	0.87	0.90	0.86	0.92	0.92	0.95	0.93	0.65	0.91	0.92	0.87	0.85
5	132KV G.S.S. Kohat	T1	0.99	0.93	0.93	0.90	0.90	0.99	0.97	0.79	0.66	0.90	0.93	0.96	0.90	0.87
		T2	0.89	0.89	0.90	0.78	0.93	0.97	0.94	0.93	0.86	0.92	0.88	0.94	0.90	0.87
		T4	0.89	0.91	0.89	0.90	0.35	0.91	0.94	0.95	0.94	0.90	0.88	0.89	0.86	0.85
6	132kV GSS Lachi	T1	0.81	0.83	0.84	0.84	0.91	0.60	0.92	0.95	0.90	0.90	0.88	0.57	0.83	0.86
		T2	0.91	0.93	0.92	0.90	0.91	0.95	0.96	0.97	0.67	0.93	0.92	0.89	0.90	0.90
7	132kV GSS Matani	T-1	0.00	0.00	0.00	0.00	0.00	0.00	0.00	0.00	0.00	0.00	0.00	0.00	0.00	0.85
		T-2	0.90	0.89	0.90	0.91	0.78	0.94	0.94	0.95	0.95	0.92	0.91	0.89	0.91	0.88
		T-3	0.88	0.90	0.90	0.95	0.93	0.90	0.95	0.94	0.93	0.94	0.92	0.91	0.92	0.90
8	132kV Rehman Baba Peshawar	T-1	0.90	0.90	0.00	0.85	0.59	0.86	0.89	0.89	0.86	0.92	0.85	0.88	0.78	0.88
		T-2	0.81	0.55	0.00	0.89	0.94	0.95	0.99	0.98	0.98	0.63	0.94	0.93	0.80	0.85
		T-3	0.00	0.00	0.00	0.95	0.97	0.96	0.94	0.94	0.94	0.91	0.92	0.92	0.70	0.92
9	132kV GSS Peshawar Industrial	T-1	0.90	0.89	0.92	0.89	0.88	0.67	0.88	0.76	0.89	0.86	0.76	0.78	0.84	0.85
		T-2	0.73	0.73	1.00	0.88	0.48	0.68	0.75	0.68	0.46	0.63	0.44	0.55	0.67	0.80
		T-3	0.91	0.89	0.62	0.92	0.94	0.95	0.88	0.98	0.95	0.88	0.92	0.90	0.90	0.90
10	132kV Charsadda AE Grid	T-1	0.95	0.95	0.77	0.95	0.90	0.91	0.75	0.98	0.94	0.90	0.89	0.92	0.90	0.86
		T-2	0.97	0.97	0.98	0.97	0.98	0.97	0.97	0.66	0.97	0.98	0.95	0.93	0.94	0.86
11	132kV GSS Hayatabad RE Grid	T-1	0.96	0.86	0.97	0.98	0.77	0.81	0.87	0.91	0.62	0.83	0.84	0.91	0.86	0.85
		T-2	0.89	0.94	0.93	0.93	0.97	0.97	0.97	0.90	0.97	0.97	0.66	0.92	0.92	0.90
12	132kV GSS Peshawar Cantt	T-1	0.90	0.85	0.89	0.85	0.84	0.93	0.94	0.93	0.84	0.83	0.91	0.86	0.88	0.86
		T-2	0.86	0.89	0.90	0.88	0.86	0.92	0.93	0.93	0.89	0.85	0.88	0.91	0.89	0.88
		T-3	0.91	0.91	0.00	0.91	0.00	0.96	0.95	0.95	0.94	0.92	0.92	0.91	0.77	0.91
13	132kV GSS, PESHAWAR CITY AE Grid	T-1	0.95	0.92	0.93	0.86	0.90	0.96	0.93	0.94	0.84	0.87	0.88	0.93	0.91	0.87
		T-2	0.93	0.67	0.94	0.92	0.78	0.90	0.96	0.88	0.73	0.87	0.89	0.94	0.87	0.84
		T-3	1.00	1.00	0.99	1.00	0.00	1.00	1.00	1.00	1.00	0.00	0.00	0.00	0.67	0.85
14	132kV GSS Peshawar University RE Grid	T-1	0.89	0.99	0.97	0.96	0.86	0.65	0.95	0.96	0.92	0.96	0.93	0.92	0.91	0.89
		T-2	0.65	0.98	0.96	0.92	0.97	0.98	0.98	0.99	0.96	0.98	0.95	0.93	0.94	0.85
		T-3	0.76	0.54	0.64	1.00	1.00	0.96	0.95	0.99	0.93	0.90	0.92	0.94	0.88	0.86
15	132kV Rajjar	T-1	0.92	0.94	0.93	0.93	0.95	0.94	0.98	0.99	0.97	0.94	0.92	0.93	0.95	0.85
16	132kV GSS Tangi	T-1	0.92	0.90	0.93	0.93	0.96	0.98	0.98	0.97	0.96	0.94	0.92	0.95	0.95	0.91
		T-2	0.81	0.82	0.82	0.87	0.88	0.88	0.20	0.83	0.89	0.85	0.84	0.85	0.79	0.85
17	132kV GSS S/Bagh	T-1	0.92	0.89	0.97	0.91	0.92	0.48	0.00	0.00	0.98	0.00	0.00	0.00	0.51	0.91
		T-3	0.97	0.98	1.00	0.00	0.92	0.96	0.00	0.00	0.00	0.00	0.00	0.00	0.40	0.92
		T-5	1.00	1.00	0.66	0.00	0.00	1.00	0.00	0.00	0.97	0.00	0.00	0.00	0.39	0.85
18	132kV GSS S/chishma	T-1	1.00	0.95	0.95	0.95	0.97	0.99	0.99	0.54	0.99	0.89	0.95	0.94	0.93	0.85
		T-2	0.99	0.98	1.00	0.37	1.00	0.68	1.00	1.00	1.00	0.65	0.87	0.96	0.87	0.85
19	132kV GSS Warsak	T-1	0.90	0.93	0.76	0.95	0.97	0.96	0.96	0.98	0.88	0.96	0.94	0.93	0.93	0.85
		T-2	0.94	0.92	0.63	0.94	0.96	0.97	0.53	0.97	0.97	0.91	0.80	0.93	0.87	0.86
20	132 kV Abbotabad	T-1	0.55	0.81	0.69	0.70	0.37	0.73	0.79	0.67	0.64	0.77	0.66	0.74	0.67	0.80
		T-2	0.76	0.79	0.50	0.94	0.87	0.89	0.73	0.94	0.90	0.90	0.83	0.85	0.82	0.83
21	132 kV AMC	T-1	0.83	0.58	0.57	0.83	0.94	0.95	0.65	0.98	0.94	0.92	0.94	0.57	0.81	0.83
22	132 kV Battal	T-1	0.94	0.91	0.54	0.96	0.97	0.33	0.98	0.92	0.80	0.97	0.91	0.90	0.84	0.88
23	132 kV Oghi	T-1	0.15	0.52	0.92	0.87	0.93	0.90	0.67	0.62	0.93	0.93	0.96	0.74	0.76	0.84

Reactive Power Compensation Study of PESCO

Existing Peak Load Power Factors at 11 KV Bus Bars

Sr. No.	Grid Station	T/F	July	Aug	Sep	Oct	Nov	Dec	Jan	Feb	Mar	Apr	May	June	Average PF	PF Rationalized
24	132 kV Haripur	T-3	0.91	0.93	0.88	0.90	0.89	0.65	0.59	0.23	0.81	0.71	0.34	0.69	0.71	0.85
		T-4	0.94	0.75	0.97	0.48	0.66	0.72	0.81	0.82	0.88	0.80	0.82	0.84	0.79	0.81
25	132 kV Mansehra	T-1	0.72	0.67	0.69	0.88	0.00	0.00	0.00	0.00	0.05	0.00	0.00	0.00	0.25	0.80
		T-2	0.68	0.69	0.68	0.63	0.55	0.70	0.70	0.91	0.63	0.73	0.51	0.79	0.68	0.81
26	132 kV Nishat Tarbela	T-1	0.00	0.00	0.00	0.00	0.00	0.00	0.00	0.00	0.00	0.00	0.00	0.00	0.00	0.85
		T-2	0.00	0.00	0.00	0.00	0.00	0.00	0.00	0.00	0.00	0.00	0.00	0.00	0.00	0.85
27	132 kV Balakot	T-1	0.86	0.95	0.66	0.96	0.97	0.65	0.99	0.98	0.96	0.95	0.93	0.77	0.89	0.82
28	132 kV Nauseri	T-1	0.61	0.96	0.95	0.93	0.99	0.97	0.97	0.97	0.97	0.95	0.96	0.95	0.93	0.85
29	132 kV Hattar	T-1	0.95	0.85	0.37	0.88	0.87	0.86	0.86	0.95	0.85	0.95	0.92	0.85	0.85	0.87
		T-2	0.94	0.98	0.99	0.98	0.97	0.96	0.95	0.66	0.48	0.88	1.00	0.81	0.88	0.85
		T-3	0.80	0.84	0.13	0.93	0.96	0.93	0.92	0.88	0.86	0.98	0.78	0.66	0.80	0.83
30	132 kV Nathiagali	T-1	0.97	0.97	0.98	0.99	0.99	0.92	0.79	0.99	0.66	0.97	0.66	0.86	0.90	0.86
31	66 kV Abbotabad	T-1	0.89	0.95	0.80	0.89	1.00	0.66	0.79	0.75	0.84	0.68	0.82	0.00	0.75	0.82
32	66 kV Haripur	T-2	0.00	0.00	0.00	0.00	0.00		0.00	0.00	0.00	0.00	0.00	0.00	0.00	0.86
		T-3	0.00	0.00	0.00	0.00	0.00		0.00	0.00	0.00	0.00	0.00	0.00	0.00	0.85
33	66 kV Havelian	T-1	0.00	0.00	0.00	0.00	0.00		0.00	0.00	0.00	0.00	0.00	0.00	0.00	0.86
		T-2	0.00	0.00	0.00	0.00	0.00		0.00	0.00	0.00	0.00	0.00	0.00	0.00	0.86
34	Peshawar Fort 132 kV	T-1	0.98	0.98	0.98	0.94	0.84	0.87	0.00	0.88	0.79	0.00	0.90	0.97	0.76	0.86
		T-2	0.89	0.91	0.90	0.82	0.73	0.85	0.00	0.87	0.81	0.00	1.00	0.92	0.72	0.86
35	132kV GSS Mardan II	T1	0.90	0.93	0.92	0.91	0.90	0.95	0.92	0.99	0.94	0.90	0.91	0.94	0.92	0.90
		T2	0.00	0.00	0.00	0.00	0.00		0.00	0.00	0.00	0.00	0.00	0.00	0.00	0.85
36	132 kV Noshera	T-1	0.92	0.98	0.97	0.94	0.94	0.95	0.96	0.61	0.92	0.91	0.89	0.97	0.91	0.91
		T-3	0.94	0.95	0.96	0.90	0.90	0.93	0.95	0.90	0.90	0.87	0.00	0.90	0.84	0.89
37	132kV Grid Station Nowshehra industrial	T1	0.91	0.88	0.89	0.88	0.89	0.89	0.93	0.92	0.90	0.86	0.89	0.89	0.89	0.89
		T2	1.00	1.00	0.73	0.90	0.89	0.66	0.91	0.94	0.67	0.88	0.81	0.89	0.86	0.86
38	132 kV Grid Station Jehangira	T1	0.93	0.94	0.91	0.01	0.81	0.67	1.00	0.86	1.00	0.92	0.91	0.62	0.80	0.87
		T2	0.89	0.95	0.00	0.91	0.93	1.00	0.91	0.81	0.95	0.91	0.88	0.63	0.81	0.89
		T3	0.00	0.00	0	0.89	0.71	0.86	0.80	0.78	0.82	0.51	0.84	0.89	0.59	0.82
39	132 kV GSS Nizam Road	T1	0.00	0.00	0.00	0.00	0.00		0.00	0.00	0.00	0.00	0.00	0.00	0.00	0.85
40	132 kV GSS Gadoon Amazai	T1	0.00	0.00	0.97	0.21	0.00		1.00	0.00	0.00	0.00	0.00	0.01	0.18	0.85
		T2	0.00	0.00	0.98	0.00	0.00		0.02	0.00	0.00	0.00	0.00	0.00	0.08	0.85
		T3	0.95	0.95	0.96	0.97	0.96	0.98	0.99	0.97	0.66	0.97	0.96	0.97	0.94	0.90
41	132 kV R/B/Tarbela	T1	0.97	0.96	0.96	0.94	0.88	0.90	0.92	0.96	0.91	0.89	0.83	0.92	0.92	0.89
		T2	0.51	0.96	0.97	0.96	0.89	0.96	0.92	0.97	0.64	0.90	0.67	0.92	0.86	0.90
42	132 kV GSS Hussai	T1	0.87	0.99	0.97	0.97	0.91	0.97	0.23	0.97	0.47	0.97	0.99	1.00	0.86	0.89
		T2	0.98	0.92	0.98	0.92	0.95	0.97	0.98	0.98	0.97	0.99	0.96	0.97	0.97	0.85

Appendix-A

Reactive Power Compensation Study of PESCO

Existing Peak Load Power Factors at 11 KV Bus Bars

Sr. No.	Grid Station	T/F	July	Aug	Sep	Oct	Nov	Dec	Jan	Feb	Mar	Apr	May	June	Average PF	PF Rationalized
43	132 kV GSS Swabi	T1	0.51	0.88	0.88	1.00	0.66	0.82	0.33	0.70	0.70	0.71	0.34	0.59	0.68	0.80
		T2	0.99	0.87	0.87	0.81	0.62	0.96	0.61	0.68	0.86	0.96	0.84	0.59	0.80	0.85
		T3	0.77	0.99	0.68	0.93	0.93	0.98	0.54	0.66	0.93	0.93	0.89	0.68	0.83	0.83
44	132kV Katlang	T-1	0.93	0.91	0.90	0.90	0.85	0.96	0.00	0.97	0.90	0.89	0.89	0.62	0.81	0.89
45	132kV Dargai	T-1	0.94	0.91	0.98	0.97	0.93	0.96	0.22	0.89	0.93	0.93	0.87	0.81	0.86	0.87
		T-2	0.73	0.63	0.64	0.88	0.76	0.70	0.83	0.71	0.66	0.64	0.63	0.62	0.70	0.80
46	132kV GSS K.Khela Swat	T-1	0.63	0.89	0.92	0.92	0.96	0.97	0.96	0.95	0.96	0.94	0.92	0.90	0.91	0.90
47	132kV Shanglapur	T-1	0.98	0.69	0.99	0.97	0.75	0.86	0.89	0.97	0.84	0.97	0.95	0.97	0.90	0.83
48	132kV chakdara	T-2	0.30	0.87	0.92	0.32	0.95	0.96	0.65	0.65	0.96	0.95	0.90	0.85	0.77	0.87
		T-3	0.66	0.71	0.66	0.73	0.74	0.77	0.76	0.77	0.77	0.71	0.67	0.83	0.73	0.81
49	132kV Karak	T-1	0.00	0.00	0.00	0.00	0.00	0.00	0.00	0.00	0.00	0.00	0.00	0.00	0.00	0.85
		T-2	0.95	0.96	0.96	0.98	0.99	0.97	0.98	0.98	0.97	0.95	0.98	0.98	0.97	0.85
50	132kV PESCO Tank	T-4	0.89	0.88	0.90	0.83	0.98	0.95	0.92	0.76	0.94	0.95	0.89	0.88	0.90	0.90
		T-6	0.92	0.89	0.84	0.60	0.93	0.61	0.94	0.94	0.93	0.90	0.90	0.02	0.79	0.90
51	66 kV KULACHI	T-1	0.00	0.00	0.00	0.00	0.00	0.00	0.00			0.00	0.00		0.00	0.85
52	66kV DRABAN	T-1	0.00	0.00	0.00	0.00	0.00	0.00	0.00			0.00	0.00		0.00	0.85
53	132kV PESCO PAROVA	T-1	0.65	0.89	0.93	0.75	0.65		0.95	0.94	0.92	1.00	0.88	0.91	0.79	0.90
		T-3	0.66	0.99	0.99	0.70	0.98		0.98	0.98	0.99	0.00	0.94	0.95	0.76	0.90
54	132kV GSS D.I. Khan	T-1	0.98	0.99	0.98	0.97	0.99	0.80	1.00	0.97	0.98	0.90	0.97	0.81	0.94	0.90
		T-3	0.98	0.99	0.97	0.98	0.98	0.99	0.66	0.97	0.99	0.97	0.98	0.98	0.95	0.90
		T-4	0.98	0.98	0.98	0.99	0.97	1.00	1.00	0.98	0.97	0.92	0.99	0.99	0.98	0.90
55	132 kV BANNU	T-3	0.80	0.89	0.86	0.94	0.94	0.84	0.92	0.56	0.90	0.92	0.94	0.62	0.84	0.87
		T-4	0.91	0.92	0.84	0.92	0.94	0.95	0.97	0.95	0.94	0.89	0.91	0.89	0.92	0.89
		T-5	0.95	0.96	0.99	0.90	0.99	0.93	0.96	0.92	0.93	0.61	0.99	0.97	0.92	0.91
56	132 kV TAJAZAI	T-1	0.93	0.92	0.93	0.95	1.00	0.99	0.99	0.95	0.98	0.97	0.95	0.96	0.96	0.90
57	66 kV TAJAZAI	T-1	0.94	0.80	0.82	0.83	0.83	0.80	0.92	0.80	0.94	0.81	0.68	0.81	0.83	0.90
		T-2	0.74	0.66	0.45	0.66	0.53	0.74	0.62	0.68	0.64	0.65	0.65	0.63	0.64	0.90
58	132 kV SARAI NAURANG	T-1	0.91	0.92	0.61	0.88	0.96	0.89	0.85	0.98	0.97	0.89	0.93	0.92	0.89	0.90
		T-2	0.90	0.92	0.65	0.92	0.90	0.92	0.93	0.97	0.96	0.95	0.93	0.95	0.91	0.90
59	66 kV KURRUM GARHI	T-2	0.96	0.00	0.98	0.82	0.98	0.94	0.34	0.73	0.97	0.96	0.64	0.91	0.77	0.90
60	132 kV GURGURI	T-1	0.00	0.00	0.00	0.00	0.00	0.00	0.00	0.00	0.00		0.00	0.00	0.00	0.85
61	132kV TIMARGARA	T-2	0.86	0.82	0.81	0.83	0.85	0.89	0.88	0.90	0.87	0.92	0.86	0.85	0.86	0.86
		T-3	0.87	0.89	0.92	0.93	0.73	0.92	0.90	0.90	0.97	0.92	0.76	0.87	0.88	0.86
62	132 kV DAGGAR	T-1	0.71	0.84	0.71	0.94	0.96	0.85	0.96	0.96	0.94	0.73	0.86	0.87	0.86	0.80
		T-2			0	0.81	0.94	0.87	0.96	0.95	0.90	0.82	0.89	0.87	0.67	0.86
63	66 kV DAGGER	T-1	0.66	0.88	0.64	0.93	0.97	0.93	0.97	0.89	0.94	0.83	0.90	0.91	0.87	0.88
		T-2	0.84	0.87	0.93							0	0	0	0.22	0.86
		T-3	0.93	0.89	0.86							0	0	0	0.22	0.87
64	66 kV TIMARGARA	T-1	0.00	0.00	0.00	0.00	0.00	0.00	0.00	0.00	0.00	0.00	0	0.00	0.00	0.86
		T-2	0.00	0.00	0.00	0.00	0.00	0.00	0.00	1.00	0.98	0.97	0.94	0.85	0.40	0.86
65	66 kV DIR	T-1	0.95	0.94	0.94	0.98	0.99	0.99	0.97	0.99	0.98	0.98	0.98	0.96	0.97	0.85
66	66kV WARAI	T-1	0.94	0.92	0.93	0.99	0.95	0.98	0.97	0.96	0.97	0.94	0.95	0.90	0.95	0.90
67	132 kV JALALA	T-3	0.98	0.64	0.60	0.47	0.94	0.98	0.99	0.99	0.96	0.92	0.90	0.86	0.85	0.90
		T-4	0.93	0.64	0.84	0.75	0.93	0.68	0.96	0.95	0.94	0.91	0.90	0.74	0.85	0.83
		T-5				0.75	0.93	0.94	0.91	0.98	0.94	0.91	0.71	0.53	0.63	0.82

Appendix B

Voltage Profile with Existing Capacitors in Year 2015

B-I: Voltage Summary of Bus Bars - Peak Load 2015 with Existing Capacitors

B-2: Load Flow Plots Peak Load-2015 with Existing Capacitors

B-3: Voltage Summary of Bus Bars - Off-Peak Load (60 %) with Existing Capacitors

B-4: Load Flow Plots Off-Peak Load-2015 with Existing Capacitors

Reactive Power Study of PESCO

Peak Load, Year 2015

Voltage Summary of 132 KV, 66 KV and 33 kVBus Bars With Existing Capacitors

Sr. No.	Bus Name	Base kV	Existing Capacitors (MVAR)	Voltage (pu)	Voltage (kV)
1	ABBOTABD	132	0	1.01	132.8
2	ALAI-KHR	132	0	1.03	135.4
3	AWT	132	0	1.00	132.4
4	AYUB M.C	132	0	1.01	132.7
5	BALAKOT	132	0	0.98	129.0
6	BANNU	132	44.4	0.98	129.3
7	BANNU-N	132	0	0.99	131.2
8	BATAL	132	0	0.98	128.7
9	BEST-W-C	132	0	1.00	132.2
10	CHAKDARA	132	39.6	0.93	122.4
11	CHARSADA	132	0	0.98	128.8
12	CHERATCE	132	0	1.00	132.2
13	D.I.KH GOMAL	132	0	0.89	117.0
14	D.I.KHAN	132	36	0.89	117.9
15	DAGGAR	132	0	0.78	103.6
16	DALZAK	132	0	1.03	135.8
17	DARABAN	132	0	0.86	113.7
18	DARGAI	132	0	0.94	124.5
19	DARGAI P	132	0	0.94	124.5
20	DBR-KHWR	132	0	1.04	137.3
21	DOBIAN	132	0	0.91	120.5
22	G.AMAZAI	132	0	0.93	122.6
23	GHAZI-IS	132	0	0.96	126.4
24	GOLENGOL	132	0	1.05	138.6
25	GOMAL-ZAM	132	0	0.90	118.8
26	GUMBAT	132	0	0.98	129.7
27	GURGURI	132	0	0.99	131.2
28	HANGU	132	0	0.99	131.2
29	HARIPUR	132	24	1.01	133.2
30	HATTAR	132	0	1.00	132.5
31	HATTIAN	132	0	0.95	125.4
32	HAYATABD	132	0	1.00	131.6
33	HUSSAI	132	0	0.87	115.5
34	JAGRAN	132	0	0.99	130.2
35	JALALA	132	0	0.91	120.3
36	JAMRUD-I	132	0	0.99	130.7
37	JEHANGRA	132	36	0.99	130.1
38	K.KHELA	132	0	0.86	113.5
39	K.T SHIP	132	0	1.00	132.2
40	KARAK	132	0	0.96	127.1
41	KATLANG	132	0	0.94	123.4

Voltage Summary of 132 KV, 66 KV and 33 kVBus Bars With Existing Capacitors					
Sr. No.	Bus Name	Base kV	Existing Capacitors (MVAR)	Voltage (pu)	Voltage (kV)
42	KHANKHWR	132	0	1.03	136.2
43	KOHAT	132	0	0.99	130.6
44	KOHATCEM	132	0	0.98	130.0
45	KOHAT-SP	132	0	1.00	132.6
46	KULACHI	132	0	0.89	117.4
47	LACHI	132	0	0.97	128.1
48	LOCOMOTV	132	0	1.00	131.7
49	MADYAN	132	0	0.86	113.4
50	MALAKAND III	132	0	0.94	124.6
51	MANSEHRA	132	24	1.01	132.9
52	MANSHR-N	132	0	1.01	133.9
53	MARDAN	132	0	0.96	126.6
54	MARDAN II	132	0	0.95	125.1
55	MARDAN-SP	132	0	1.00	131.9
56	MATANI	132	0	1.03	135.6
57	MUSTHKCF	132	0	1.02	134.2
58	MUZAFBAD	132	0	0.95	125.5
59	NATIAGLI	132	0	1.00	132.4
60	NAUSERY	132	0	0.97	127.7
61	NIZAMPUR	132	0	1.00	132.3
62	NOWSHCTY	132	0	1.00	131.7
63	NOWSHR-I	132	0	1.00	132.6
64	OGHI	132	0	1.00	132.4
65	PABBI	132	0	1.01	133.6
66	PAROVA	132	0	0.88	116.1
67	PEHUR POWER	132	0	0.93	123.0
68	PESH CTY	132	0	1.02	135.3
69	PESH UNI	132	24	0.99	130.3
70	PESH.IND	132	0	0.99	130.3
71	PESHCANT	132	0	0.98	129.0
72	PESHFORT	132	0	1.03	136.5
73	PEZU	132	0	0.91	120.0
74	PPCCHARS	132	0	0.98	128.8
75	RAJJAR	132	0	0.98	129.6
76	R-BABA	132	0	1.03	136.5
77	S.NURANG	132	0	0.95	125.0
78	SABIR ABAD	132	0	0.96	126.2
79	SADI-C-F	132	0	1.00	132.3
80	SAKHI-CH	132	0	0.99	131.2
81	SHABQDAR	132	0	1.01	133.4
82	SHAHI BAG SP	132	0	1.04	137.0
83	SHAHIBAGH	132	24	0.99	130.5
84	SHAIBG-N	132	0	1.05	138.3
85	SHANGLAP	132	0	0.85	112.8
86	SHMUHDI-1	132	0	1.05	138.4

Voltage Summary of 132 KV, 66 KV and 33 kVBus Bars With Existing Capacitors					
Sr. No.	**Bus Name**	**Base kV**	**Existing Capacitors (MVAR)**	**Voltage (pu)**	**Voltage (kV)**
87	SHMUHDI-2	132	0	1.03	136.1
88	SIRAJ BABA	132	0	0.96	126.8
89	SWABI	132	0	0.91	120.3
90	SWAT	132	0	0.87	115.4
91	TAJAZAI	132	0	0.93	123.1
92	TALL	132	35.2	1.00	131.7
93	TANGI	132	0	0.99	131.1
94	TANK	132	0	0.90	118.7
95	TARBELA-N	132	0	0.95	125.7
96	TARBELA-R	132	0	0.94	123.7
97	TARNAWAN	132	0	1.01	133.8
98	THAKOT	132	0	0.96	127.3
99	TIMERGARA	132	0	0.92	121.4
100	WARSAK	132	0	1.01	133.0
101	WARSAK P	132	0	1.01	133.5
102	BADABER	66	0	1.01	66.8
103	BANNU	66	0	0.99	65.0
104	BUNDKURI	66	0	0.92	60.5
105	D.I.KHAN	66	0	0.97	64.2
106	DB-BDBER	66	0	1.02	67.4
107	DIR	66	0	0.74	49.1
108	HANGU	66	0	0.98	64.6
109	HARIPUR	66	0	0.67	44.1
110	HAVELIAN	66	0	0.51	33.3
111	KHESHKI	66	0	1.00	65.8
112	KOHAT	66	0	1.00	66.2
113	KRM.GRHI	66	0	0.96	63.3
114	NSR CITY	66	0	1.00	65.9
115	SHABQDAR	66	0	1.04	68.4
116	SHAHIBAG	66	0	1.02	67.6
117	TAJAZAI	66	0	0.95	62.9
118	TALL	66	0	1.00	66.1
119	TIMRGARH	66	0	0.92	61.0
120	WARAI	66	0	0.80	52.9
121	CHT KLASS	33	0	0.90	29.6
122	DAROSH	33	0	0.83	27.4
123	DIR	33	0	0.82	27.1
124	JUTILIST	33	0	0.83	27.4
125	MAJUHI	33	0	0.91	30.0
126	MUZFRABD	33	0	0.92	30.5
127	PATTAN	33	0	0.98	32.2
128	RESHUN	33	0	0.83	27.5
129	SHISHI	33	0	0.83	27.4
130	THAKOT	33	0	1.00	32.9
		Total	**287.2**		

Reactive Power Study of PESCO

Peak Load, Year 2015

Voltage Summary of 11 KV Bus Bars With Existing Capacitors

Sr. No.	Bus Name	Base kV	Existing Capacitors (MVAR)	Voltage (pu)	Voltage (kV)
1	ABBOTABAD-T1	11	6.4	1.02	11.2
2	ABBOTABAD-T2	11	4.8	0.99	10.9
3	ABBOTABAD-T3	11	0	0.98	10.7
4	AYUB M.C-T1	11	4.4	1.00	11.0
5	AYUB M.C-T2	11	0	0.97	10.6
6	BADABER-T1	11	0	1.01	11.1
7	BADABER-T2	11	7.2	1.05	11.5
8	BALAKOT-T1	11	0	0.93	10.2
9	BANNU N-T1	11	0	0.96	10.5
10	BANNU N-T2	11	0	0.96	10.5
11	BANNU-T3	11	7.2	1.00	10.9
12	BANNU-T4	11	3	0.98	10.7
13	BANNU-T5	11	7.2	0.98	10.8
14	BATAL-T1	11	0	0.96	10.6
15	BATAL-T2	11	0	0.96	10.6
16	BUNDKARI-T1	11	0	0.99	10.9
17	BUNDKARI-T2	11	2.4	1.00	11.0
18	CHAKDARA-T2	11	4.6	0.91	10.1
19	CHAKDARA-T3	11	4.2	0.90	10.0
20	CHAKDARA-T4	11	0	0.89	9.7
21	CHARSADA-T1	11	4.8	0.97	10.7
22	CHARSADA-T2	11	7.2	1.00	10.9
23	CHARSADA-T3	11	0	0.96	10.5
24	CHT KLASS-T1	11	0	0.86	9.5
25	D.I.KH GM-T1	11	0	0.90	9.9
26	D.I.KH GM-T2	11	0	0.90	9.9
27	D.I.KHAN-T1	11	4.8	0.98	10.8
28	D.I.KHAN-T3	11	4.8	0.98	10.8
29	D.I.KHAN-T4	11	4.8	0.98	10.8
30	DAGGAR-T1	11	1.2	0.78	8.6
31	DAGGAR-T2	11	0	0.80	8.8
32	DAGGAR-T3	11	0	0.79	8.7
33	DALZAK-T1	11	0	1.01	11.1
34	DALZAK-T2	11	0	1.02	11.2
35	DARABAN-T1	11	0	0.92	10.1

Voltage Summary of 11 KV Bus Bars With Existing Capacitors					
Sr. No.	Bus Name	Base kV	Existing Capacitors (MVAR)	Voltage (pu)	Voltage (kV)
36	DARGAI-T1	11	0	0.84	9.2
37	DARGAI-T2	11	0	0.83	9.1
38	DARGAI-T3	11	0	0.85	9.3
39	DAROSH-T1	11	0	0.84	9.2
40	DIR-T1	11	0	0.76	8.4
41	DIR-T2	11	0	0.76	8.4
42	DOBIAN-T1	11	0	0.91	10.0
43	DOBIAN-T2	11	0	0.91	10.0
44	G.AMAZAI-T1	11	4.8	0.90	9.9
45	G.AMAZAI-T2	11	4.8	0.86	9.5
46	G.AMAZAI-T3	11	0	0.84	9.2
47	GUMBAT-T1	11	0	0.98	10.8
48	GUMBAT-T2	11	0	0.97	10.6
49	GURGURI-T1	11	4.8	1.08	11.9
50	HANGU-T1	11	3.4	1.00	11.0
51	HANGU-T2	11	4.8	1.01	11.1
52	HARIPUR-T2	11	0	0.69	7.6
53	HARIPUR-T3	11	6	1.01	11.1
54	HARIPUR-T3	11	0	0.64	7.1
55	HARIPUR-T4	11	3	1.00	10.9
56	HARIPUR-T5	11	0	0.99	10.9
57	HATTAR-T1	11	4.8	0.95	10.5
58	HATTAR-T2	11	4.8	0.96	10.5
59	HATTAR-T3	11	0	0.94	10.3
60	HATTIAN-T1	11	0	0.90	9.9
61	HAVELIAN-T1	11	2.4	0.50	5.5
62	HAVELIAN-T2	11	0	0.46	5.0
63	HAYATABD-T1	11	6.8	1.02	11.2
64	HAYATABD-T2	11	7.2	1.01	11.2
65	HAYATABD-T3	11	0	0.96	10.6
66	HUSSAI-T1	11	4.8	0.85	9.4
67	HUSSAI-T2	11	0	0.82	9.0
68	JALALA-T3	11	0	0.90	9.9
69	JALALA-T4	11	0	0.88	9.7
70	JALALA-T5	11	0	0.88	9.7
71	JAMRUD I-T1	11	12	0.96	10.5
72	JAMRUD I-T2	11	12	0.96	10.6
73	JAMRUD I-T3	11	0	0.94	10.4
74	JAMRUD I-T4	11	0	0.99	10.8
75	JEHANGRA-T1	11	2.4	0.97	10.6

Voltage Summary of 11 KV Bus Bars With Existing Capacitors					
Sr. No.	Bus Name	Base kV	Existing Capacitors (MVAR)	Voltage (pu)	Voltage (kV)
76	JEHANGRA-T2	11	6	0.99	10.9
77	JEHANGRA-T3	11	0	0.97	10.6
78	JUTILIST-T1	11	0	0.80	8.8
79	JUTILIST-T2	11	0	0.80	8.8
80	K.KHELA-T1	11	4.8	0.87	9.5
81	K.KHELA-T2	11	0	0.82	9.0
82	K.T SHIP-T1	11	0	0.93	10.3
83	K.T SHIP-T2	11	0	0.93	10.3
84	KARAK-T1	11	3.6	0.96	10.6
85	KARAK-T2	11	0	0.95	10.4
86	KARAK-T3	11	0	0.95	10.4
87	KATLANG-T1	11	0	0.90	9.9
88	KATLANG-T2	11	0	0.92	10.1
89	KHESHKI-T1	11	0	0.99	10.9
90	KOHAT SP-T1	11	7.2	1.01	11.1
91	KOHAT SP-T2	11	7.2	1.00	11.0
92	KOHAT-T4	11	0	0.93	10.3
93	KRM.GRHI-T1	11	2.1	0.96	10.6
94	KRM.GRHI-T2	11	0	0.96	10.6
95	KULACHI-T1	11	1.2	0.97	10.7
96	LACHI-T1	11	2.4	0.94	10.3
97	LACHI-T2	11	0	0.93	10.2
98	MADYAN-T1	11	0	0.93	10.2
99	MADYAN-T2	11	0	0.93	10.2
100	MAJUHI-T1	11	0	0.91	10.0
101	MANSEHRA-T1	11	4.8	1.00	11.0
102	MANSEHRA-T2	11	7.2	1.00	11.0
103	MANSEHRA-T3	11	0	0.95	10.4
104	MARDAN 2-T1	11	2.2	0.91	10.1
105	MARDAN 2-T2	11	0	0.90	9.9
106	MARDAN-T1	11	0	0.94	10.4
107	MARDAN-T2	11	0	0.92	10.1
108	MATANI-T2	11	4.8	1.02	11.2
109	MATANI-T3	11	7.2	1.03	11.4
110	MATANI-T4	11	0	1.00	11.0
111	MUZAFABAD-T1	11	0	0.96	10.5
112	MUZAFABAD-T2	11	0	0.98	10.7
113	MUZAFABAD-T4	11	0	0.96	10.5
114	NATIAGALI-T1	11	0	0.96	10.6
115	NAUSERY-T1	11	0	0.94	10.4

Voltage Summary of 11 KV Bus Bars With Existing Capacitors					
Sr. No.	Bus Name	Base kV	Existing Capacitors (MVAR)	Voltage (pu)	Voltage (kV)
116	NIZAMPUR-T1	11	2.4	1.00	11.1
117	NOWSHCITY-T1	11	4.8	1.01	11.1
118	NOWSHCITY-T3	11	4.8	1.01	11.1
119	NOWSHCITY-T4	11	0	0.99	10.9
120	NOWSHR I-T1	11	7.2	1.01	11.1
121	NOWSHR I-T2	11	4.8	1.01	11.1
122	NOWSHR I-T3	11	0	0.97	10.7
123	OGHI-T1	11	0	0.96	10.6
124	OGHI-T2	11	0	0.96	10.6
125	PABBI-T1	11	7.2	1.03	11.3
126	PABBI-T2	11	7.2	1.03	11.3
127	PABBI-T3	11	0	1.03	11.3
128	PAROVA-T1	11	0	0.96	10.6
129	PAROVA-T2	11	2	0.89	9.8
130	PAROVA-T3	11	0	0.96	10.6
131	PATTAN-T1	11	0	0.95	10.4
132	PESH CITY-T1	11	0	1.00	10.9
133	PESH CITY-T2	11	7.2	1.02	11.2
134	PESH CITY-T3	11	7.2	1.02	11.2
135	PESH FRT-T1	11	7.2	1.03	11.4
136	PESH FRT-T2	11	7.2	1.03	11.4
137	PESH IND-T1	11	7.2	0.96	10.6
138	PESH IND-T2	11	12	0.99	10.9
139	PESH IND-T3	11	0	0.95	10.5
140	PESH UNIV-T1	11	6.8	0.98	10.8
141	PESH UNIV-T2	11	6.8	1.00	11.0
142	PESH UNIV-T3	11	6.8	1.00	11.0
143	PESHCANT-T1	11	0	0.97	10.6
144	PESHCANT-T2	11	0	0.96	10.6
145	PESHCANT-T3	11	0	0.97	10.6
146	PESHCANT-T4	11	0	0.97	10.6
147	PEZU-T1	11	0	0.90	9.9
148	PEZU-T2	11	0	0.90	9.9
149	PPCCHARS-T1	11	0	0.97	10.7
150	R BABA-T1	11	0	1.02	11.2
151	R BABA-T2	11	0	1.02	11.3
152	R BABA-T3	11	0	1.04	11.4
153	RAJJAR-T1	11	0	0.99	10.9
154	RAJJAR-T2	11	0	0.96	10.5
155	S NURANG-T1	11	7.2	0.96	10.6

Voltage Summary of 11 KV Bus Bars With Existing Capacitors					
Sr. No.	Bus Name	Base kV	Existing Capacitors (MVAR)	Voltage (pu)	Voltage (kV)
156	S NURANG-T2	11	0	0.90	9.9
157	S NURANG-T3	11	0	0.90	9.9
158	SABIR ABD-T1	11	0	0.92	10.2
159	SAKHI CH-T1	11	4.8	1.03	11.3
160	SAKHI CH-T2	11	4.8	1.01	11.2
161	SAKHI CH-T3	11	0	0.96	10.6
162	SANGLAP-T1	11	0	0.81	9.0
163	SHABQADAR-T3	11	4.8	1.02	11.3
164	SHABQADAR-T4	11	7.2	1.03	11.4
165	SHABQADAR-T5	11	0	0.99	10.9
166	SHAHIBAGH-T3	11	7	1.00	11.0
167	SHAHIBAGH-T5	11	7.2	1.00	11.0
168	SHAHIBAGH-T6	11	0	0.96	10.6
169	SHAIBG N-T1	11	0	1.02	11.3
170	SHAIBG N-T2	11	0	1.02	11.3
171	SHMUHDI-T1	11	0	0.97	10.7
172	SHMUHDI-T2	11	0	0.97	10.7
173	SIRAJ BBA-T1	11	0	0.94	10.3
174	SIRAJ BBA-T2	11	0	0.99	10.9
175	SWABI-T1	11	4.8	0.89	9.8
176	SWABI-T2	11	3.6	0.92	10.2
177	SWABI-T3	11	0	0.91	10.0
178	SWAT-T1	11	0	0.83	9.2
179	SWAT-T2	11	0	0.84	9.2
180	SWAT-T3	11	0	0.86	9.5
181	SWAT-T5	11	0	0.81	9.0
182	TAJAZAI-T1	11	4.8	0.96	10.5
183	TAJAZAI-T1	11	1.8	0.97	10.6
184	TAJAZAI-T2	11	4.8	0.96	10.5
185	TAJAZAI-T2	11	0	0.94	10.4
186	TALL-T2	11	3.6	1.05	11.5
187	TALL-T3	11	4.8	1.05	11.6
188	TANGI-T1	11	4.8	1.01	11.1
189	TANGI-T2	11	7.2	1.03	11.4
190	TANGI-T3	11	0	0.99	10.9
191	TANK-T4	11	0	0.87	9.6
192	TANK-T6	11	0	0.87	9.6
193	TANK-T7	11	0	0.87	9.6
194	TARBELA N-T1	11	4.8	0.97	10.7
195	TARBELA N-T2	11	0	0.93	10.2

Voltage Summary of 11 KV Bus Bars With Existing Capacitors					
Sr. No.	**Bus Name**	**Base kV**	**Existing Capacitors (MVAR)**	**Voltage (pu)**	**Voltage (kV)**
196	TARBELA R-T1	11	4.8	0.93	10.2
197	TARBELA R-T2	11	4.6	1.01	11.1
198	TARBELA R-T3	11	0	0.91	10.0
199	THAKOT-T1	11	0	0.99	10.9
200	THAKOT-T2	11	0	0.99	10.9
201	TIMERGARA-T2	11	3.6	0.94	10.3
202	TIMERGARA-T3	11	0	0.87	9.6
203	TIMERGARA-T4	11	0	0.92	10.1
204	TIMRGARH-T1	11	0	0.89	9.8
205	TIMRGARH-T2	11	2.4	0.91	10.0
206	WARAI-T1	11	0	0.80	8.8
207	WARSAK-T1	11	0	1.00	11.0
208	WARSAK-T2	11	0	1.00	11.0
209	WARSAK-T3	11	0	0.97	10.7
		Total	**440.7**		

Reactive Power Compensation Study of PESCO

With Existing Capacitor Banks

Peak Load : Year 2015

Exhibit No. 2015-1.1

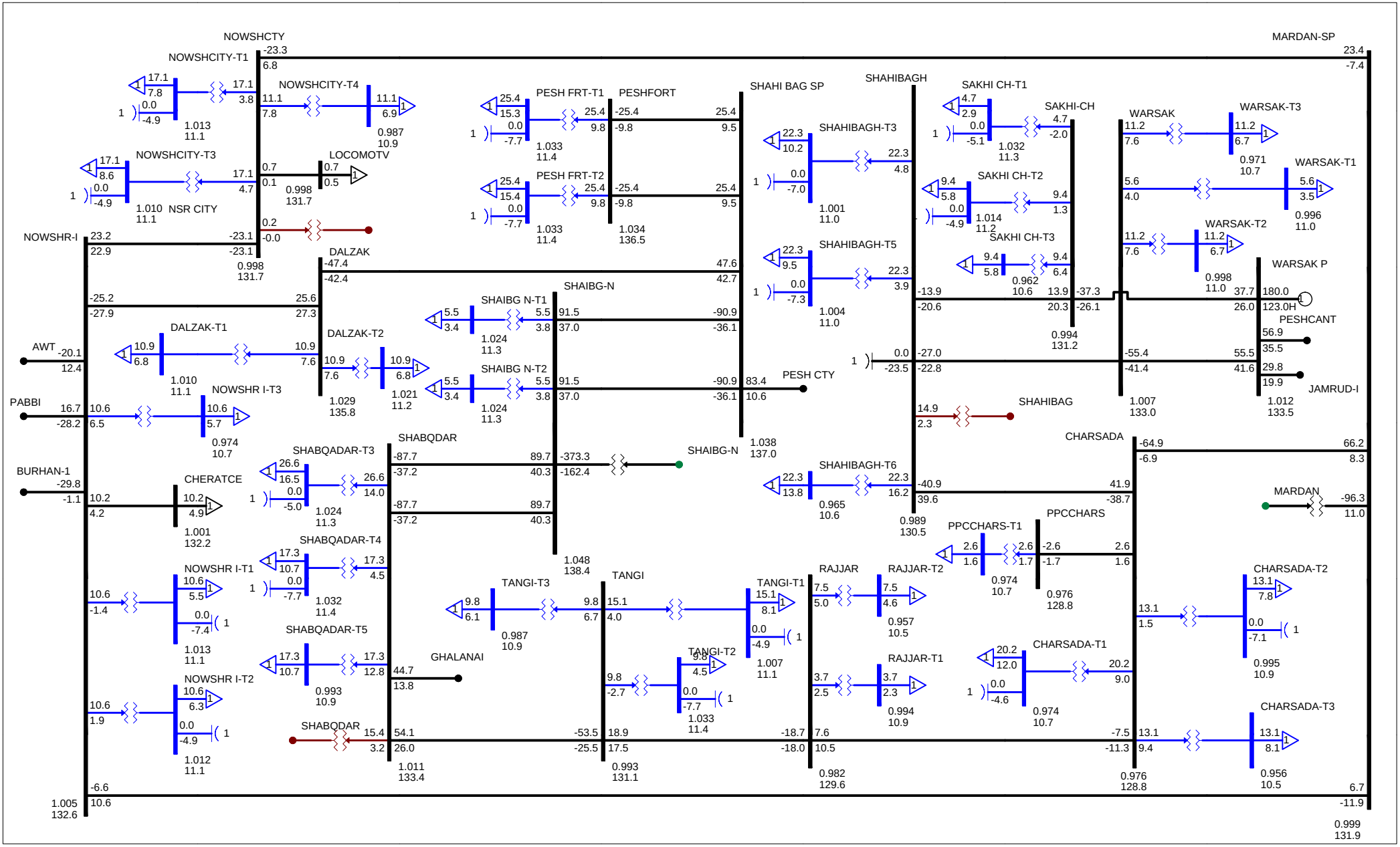

Reactive Power Compensation Study of PESCO

With Existing Capacitor Banks

Peak Load : Year 2015

Exhibit No. 2015-1.2

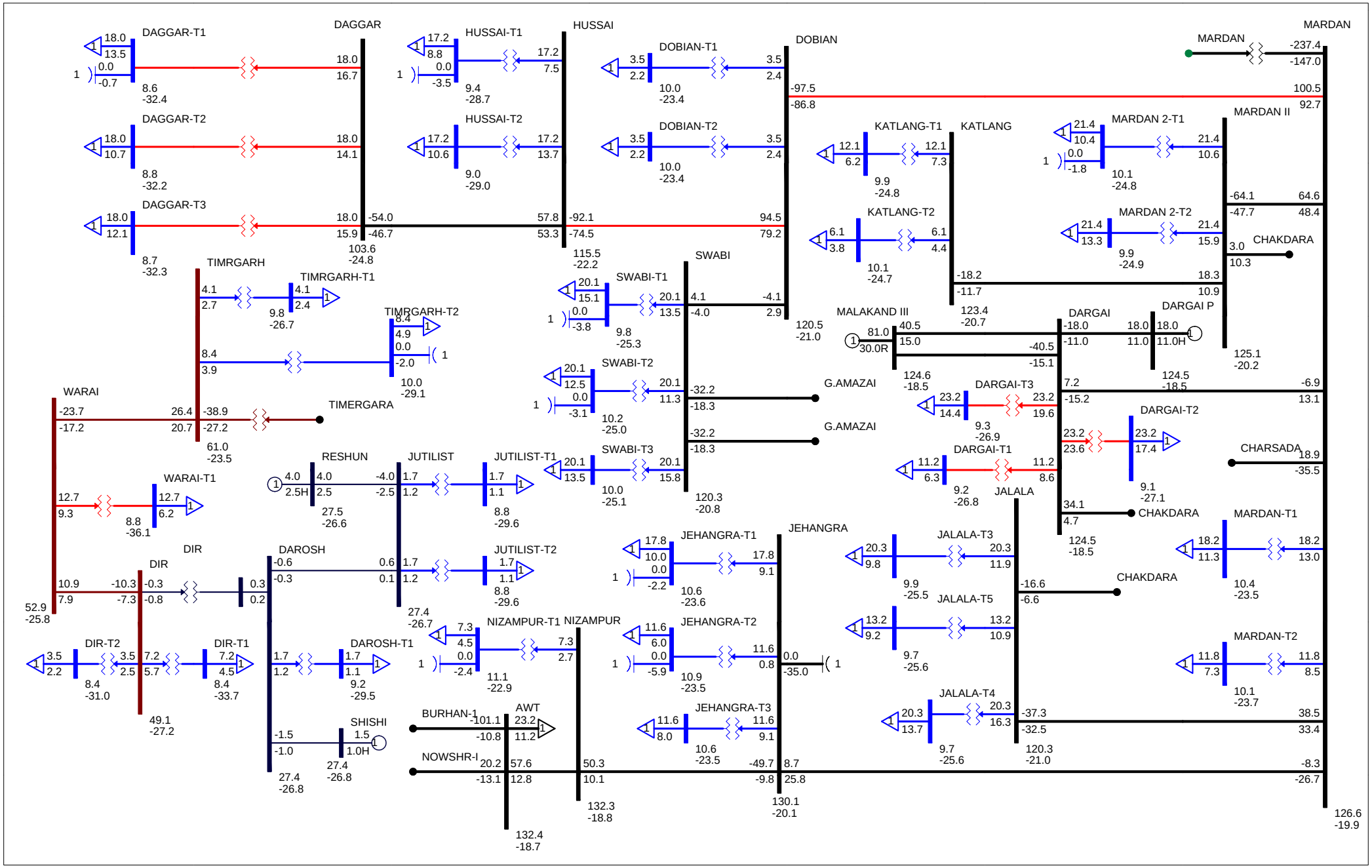

Reactive Power Compensation Study of PESCO

With Existing Capacitor Banks

Peak Load : Year 2015

Exhibit No. 2015-1.3

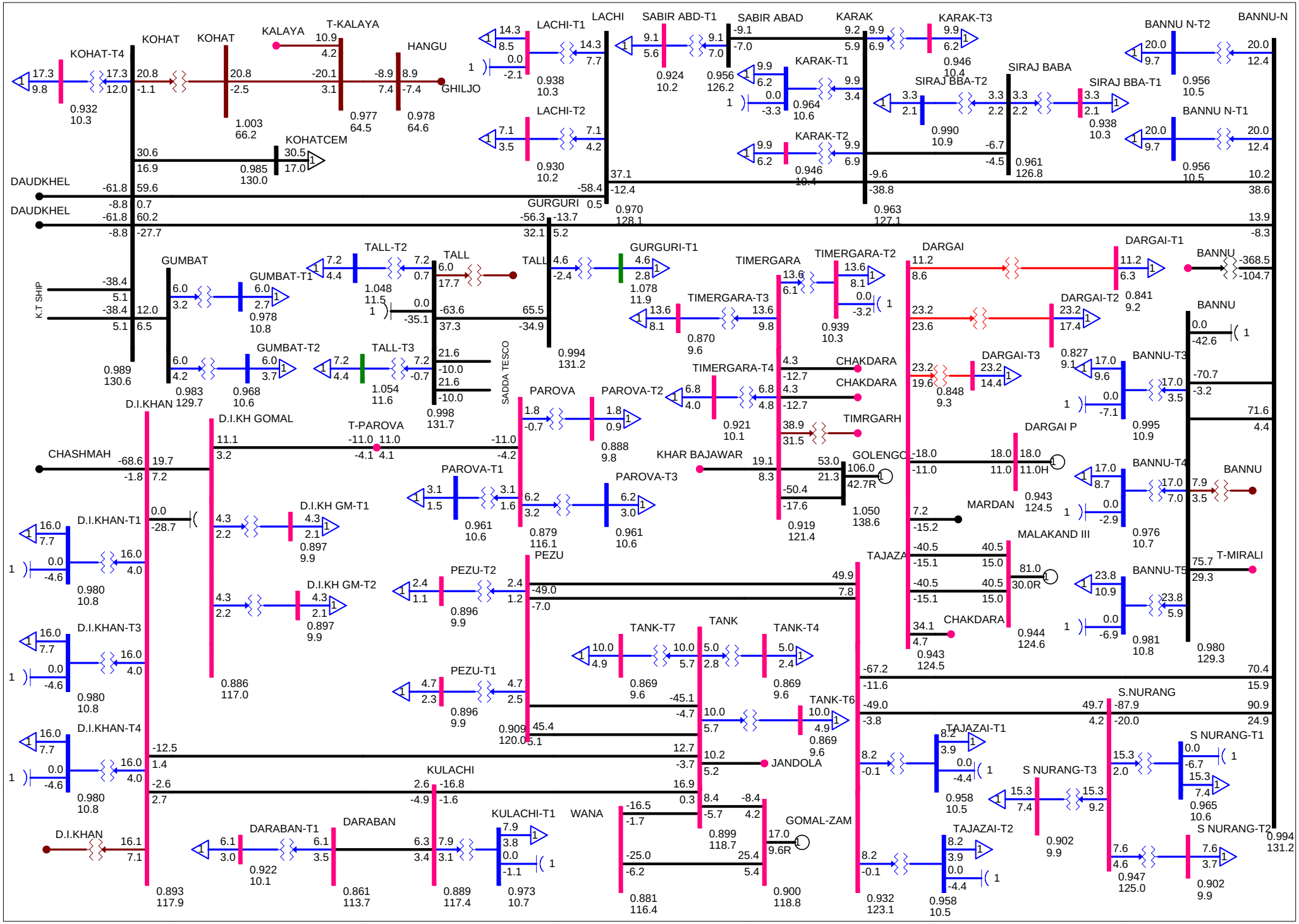

Reactive Power Compensation Study of PESCO

With Existing Capacitor Banks

Peak Load : Year 2015

Exhibit No. 2015-1.4

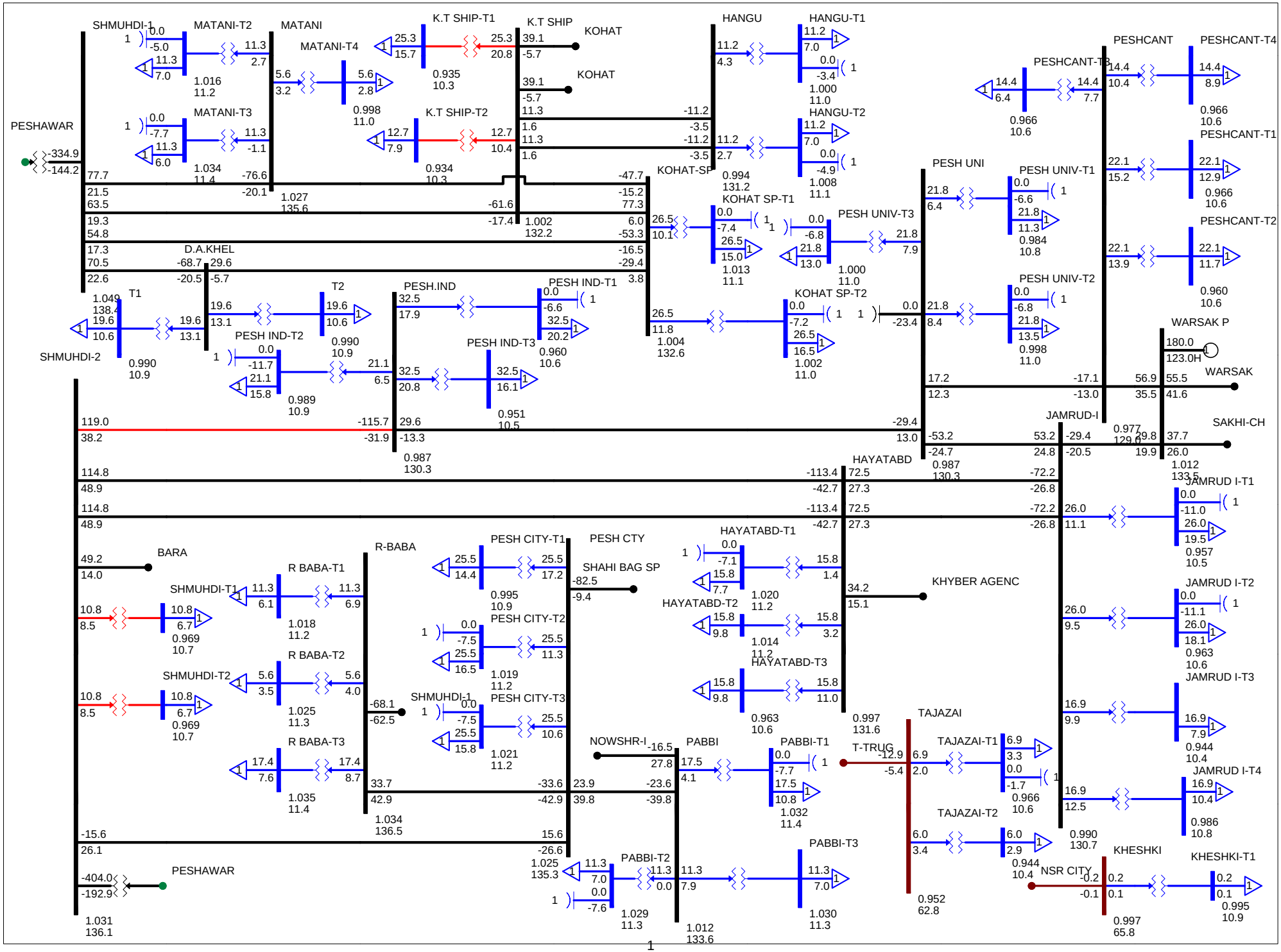

Reactive Power Compensation Study of PESCO

With Existing Capacitor Banks

Peak Load : Year 2015

Exhibit No. 2015-1.5

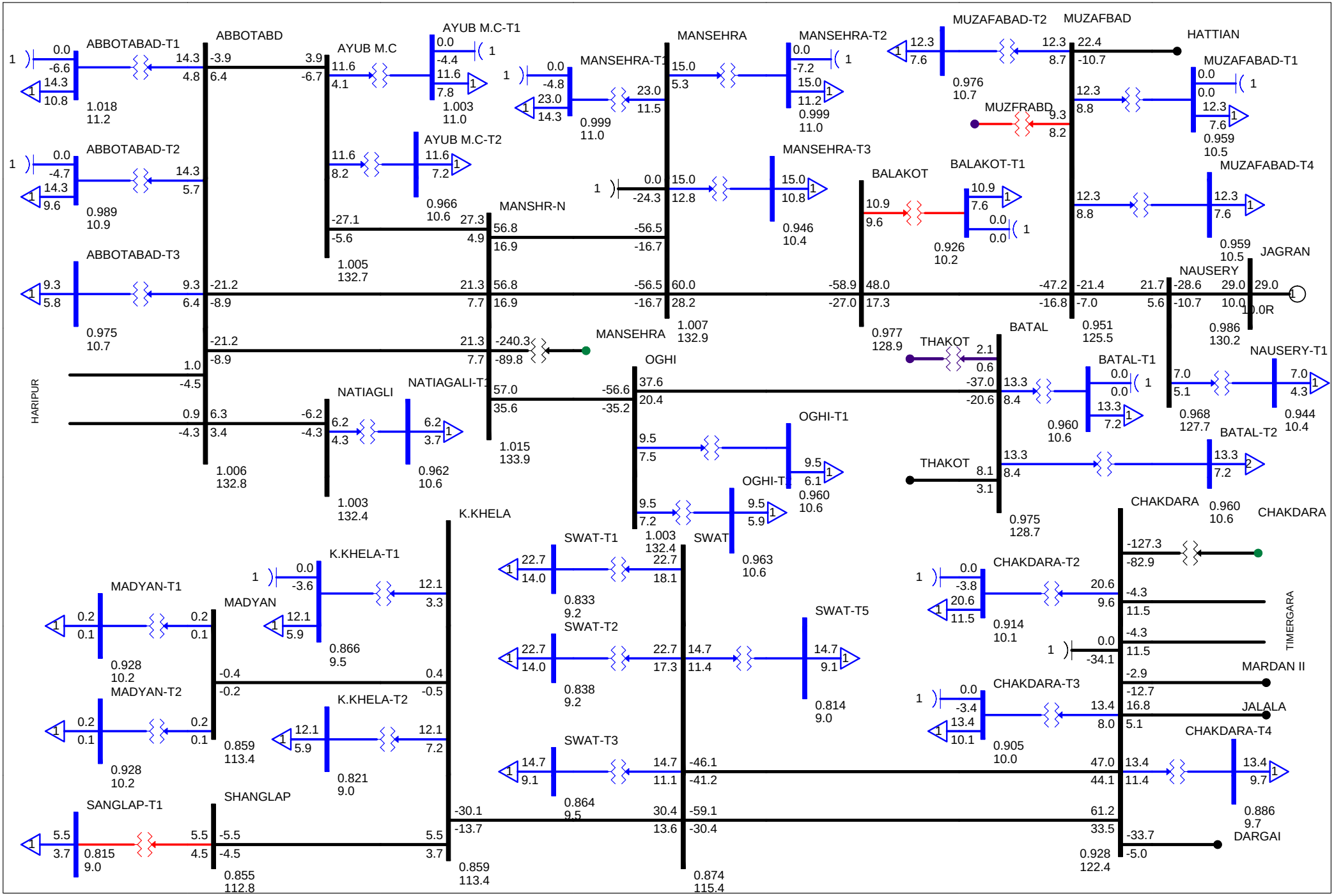

Reactive Power Compensation Study of PESCO

With Existing Capacitor Banks

Peak Load : Year 2015

Exhibit No. 2015-1.6

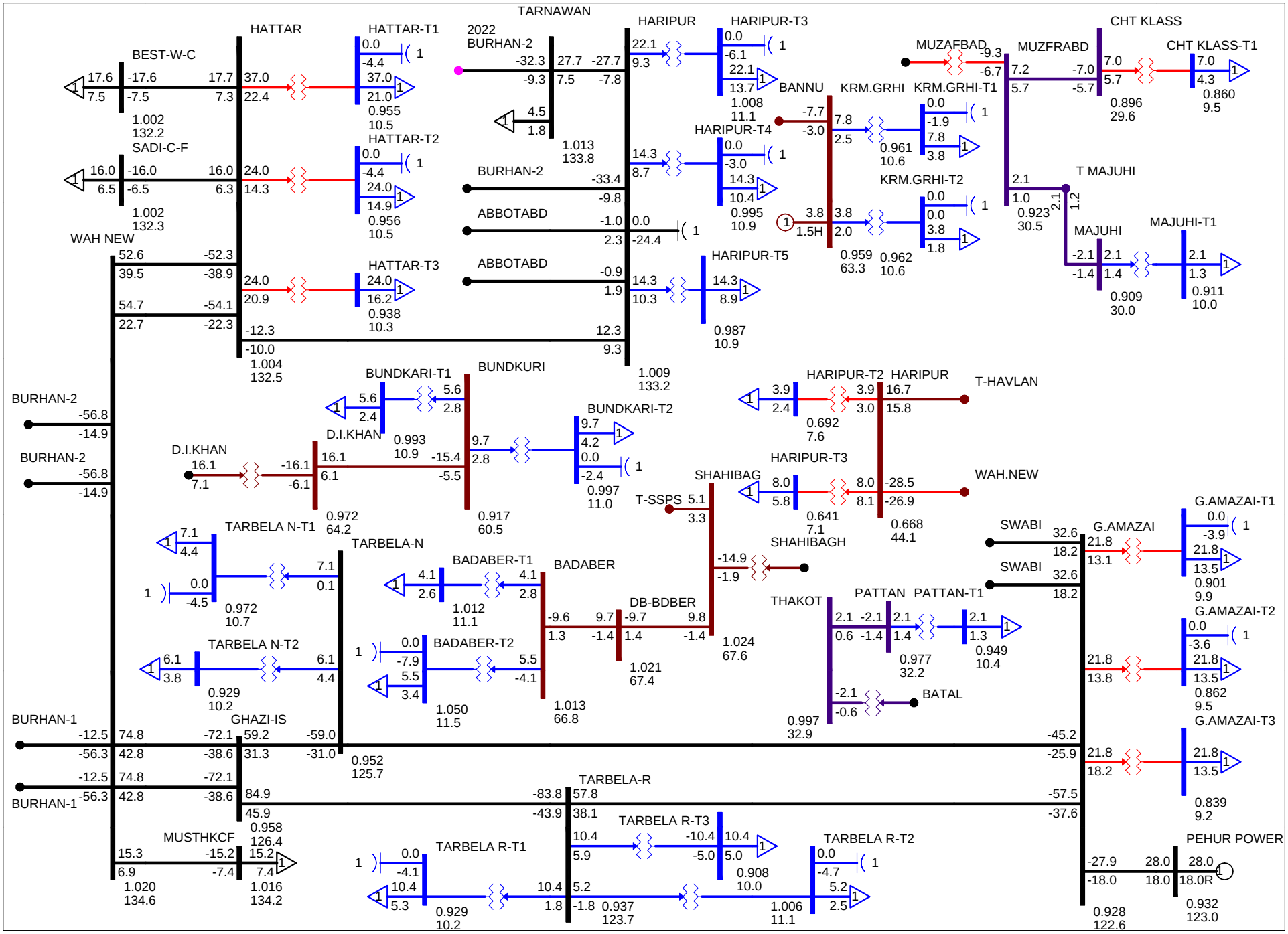

Reactive Power Study of PESCO

Off-Peak Load, Year 2015

Voltage Summary of 132 Kv, 66 Kv and 33 kV Bus Bars With Existing Capacitors

Sr. No.	Bus Name	Base kV	Existing Capacitors (MVAR)	Voltage (pu)	Voltage (kV)	Remarks
1	ABBOTABD	132	0	1.03	135.7	No Change
2	ALAI-KHR	132	0	1.04	137.0	No Change
3	AWT	132	0	1.04	137.1	No Change
4	AYUB M.C	132	0	1.03	135.7	No Change
5	BALAKOT	132	0	1.01	133.0	No Change
6	BANNU	132	44.4	1.04	136.8	No Change
7	BANNU-N	132	0	1.03	136.5	No Change
8	BATAL	132	0	1.02	134.0	No Change
9	BEST-W-C	132	0	1.01	133.0	No Change
10	CHAKDARA	132	39.6	1.03	136.4	No Change
11	CHARSADA	132	0	1.03	135.9	No Change
12	CHERATCE	132	0	1.03	136.4	No Change
13	D.I.KH GOMAL	132	0	0.99	131.1	No Change
14	D.I.KHAN	132	36	1.00	131.6	No Change
15	DAGGAR	132	0	0.96	127.2	No Change
16	DALZAK	132	0	1.04	136.8	No Change
17	DARABAN	132	0	0.98	129.4	No Change
18	DARGAI	132	0	1.04	137.2	No Change
19	DARGAI P	132	0	1.04	137.2	No Change
20	DBR-KHWR	132	0	1.04	137.5	No Change
21	DOBIAN	132	0	1.02	134.2	No Change
22	G.AMAZAI	132	0	1.00	131.5	No Change
23	GHAZI-IS	132	0	1.00	132.3	No Change
24	GOLENGOL	132	0	1.05	138.8	No Change
25	GOMAL-ZAM	132	0	1.00	131.9	No Change
26	GUMBAT	132	0	1.02	134.3	No Change
27	GURGURI	132	0	1.04	136.9	No Change
28	HANGU	132	0	1.02	134.0	No Change
29	HARIPUR	132	24	1.02	134.4	No Change
30	HATTAR	132	0	1.01	133.2	No Change
31	HATTIAN	132	0	0.99	130.6	No Change
32	HAYATABD	132	0	1.03	135.8	No Change
33	HUSSAI	132	0	1.00	132.2	No Change
34	JAGRAN	132	0	1.01	133.0	No Change
35	JALALA	132	0	1.02	135.1	No Change
36	JAMRUD-I	132	0	1.03	135.4	No Change
37	JEHANGRA	132	36	1.05	138.1	No Change
38	K.KHELA	132	0	1.01	132.8	No Change
39	K.T SHIP	132	0	1.02	134.6	No Change
40	KARAK	132	0	1.02	134.0	No Change
41	KATLANG	132	0	1.03	136.5	No Change
42	KHANKHWR	132	0	1.04	137.3	No Change
43	KOHAT	132	0	1.02	134.8	No Change

Voltage Summary of 132 Kv, 66 Kv and 33 kV Bus Bars With Existing Capacitors						
Sr. No.	Bus Name	Base kV	Existing Capacitors (MVAR)	Voltage (pu)	Voltage (kV)	Remarks
44	KOHATCEM	132	0	1.02	134.4	No Change
45	KOHAT-SP	132	0	1.02	134.7	No Change
46	KULACHI	132	0	0.99	131.3	No Change
47	LACHI	132	0	1.02	134.0	No Change
48	LOCOMOTV	132	0	1.03	136.6	No Change
49	MADYAN	132	0	1.01	132.8	No Change
50	MALAKAND III	132	0	1.04	137.3	No Change
51	MANSEHRA	132	24	1.03	136.0	No Change
52	MANSHR-N	132	0	1.03	136.6	No Change
53	MARDAN	132	0	1.05	138.0	No Change
54	MARDAN II	132	0	1.04	137.3	No Change
55	MARDAN-SP	132	0	1.05	138.0	No Change
56	MATANI	132	0	1.03	136.2	No Change
57	MUSTHKCF	132	0	1.01	133.7	No Change
58	MUZAFBAD	132	0	0.99	130.4	No Change
59	NATIAGLI	132	0	1.03	135.5	No Change
60	NAUSERY	132	0	1.00	131.7	No Change
61	NIZAMPUR	132	0	1.04	137.1	No Change
62	NOWSHCTY	132	0	1.03	136.6	No Change
63	NOWSHR-I	132	0	1.03	136.6	No Change
64	OGHI	132	0	1.03	135.8	No Change
65	PABBI	132	0	1.03	136.2	No Change
66	PAROVA	132	0	0.99	130.6	No Change
67	PEHUR POWER	132	0	1.00	131.8	No Change
68	PESH CTY	132	0	1.04	136.7	No Change
69	PESH UNI	132	24	1.02	135.2	No Change
70	PESH.IND	132	0	1.02	135.0	No Change
71	PESHCANT	132	0	1.02	134.6	No Change
72	PESHFORT	132	0	1.04	136.7	No Change
73	PEZU	132	0	1.00	131.9	No Change
74	PPCCHARS	132	0	1.03	135.9	No Change
75	RAJJAR	132	0	1.02	134.7	No Change
76	R-BABA	132	0	1.04	137.0	No Change
77	S.NURANG	132	0	1.01	133.6	No Change
78	SABIR ABAD	132	0	1.01	133.5	No Change
79	SADI-C-F	132	0	1.01	133.1	No Change
80	SAKHI-CH	132	0	1.03	136.0	No Change
81	SHABQDAR	132	0	1.02	134.2	No Change
82	SHAHI BAG SP	132	0	1.04	137.1	No Change
83	SHAHIBAGH	132	24	1.03	135.8	No Change
84	SHAIBG-N	132	0	1.04	137.6	No Change
85	SHANGLAP	132	0	1.00	132.5	No Change
86	SHMUHDI-1	132	0	1.04	137.7	No Change
87	SHMUHDI-2	132	0	1.05	138.1	No Change
88	SIRAJ BABA	132	0	1.01	133.8	No Change
89	SWABI	132	0	1.00	131.4	No Change
90	SWAT	132	0	1.01	133.4	No Change

Voltage Summary of 132 Kv, 66 Kv and 33 kV Bus Bars With Existing Capacitors						
Sr. No.	**Bus Name**	**Base kV**	**Existing Capacitors (MVAR)**	**Voltage (pu)**	**Voltage (kV)**	**Remarks**
91	TAJAZAI	132	0	1.01	132.9	No Change
92	TALL	132	35.2	1.04	137.9	No Change
93	TANGI	132	0	1.01	133.9	No Change
94	TANK	132	0	1.00	131.8	No Change
95	TARBELA-N	132	0	1.00	132.1	No Change
96	TARBELA-R	132	0	1.00	131.7	No Change
97	TARNAWAN	132	0	1.02	134.5	No Change
98	THAKOT	132	0	1.01	133.3	No Change
99	TIMERGARA	132	0	1.02	134.8	No Change
100	WARSAK	132	0	1.04	137.0	No Change
101	WARSAK P	132	0	1.04	137.3	No Change
102	BADABER	66	0	1.03	68.1	No Change
103	BANNU	66	0	1.04	68.4	No Change
104	BUNDKURI	66	0	1.00	66.2	No Change
105	D.I.KHAN	66	0	1.04	68.4	No Change
106	DB-BDBER	66	0	1.04	68.7	No Change
107	DIR	66	0	0.96	63.1	No Change
108	HANGU	66	0	1.01	66.9	No Change
109	HARIPUR	66	0	0.99	65.5	No Change
110	HAVELIAN	66	0	0.95	62.5	No Change
111	KHESHKI	66	0	1.03	68.3	No Change
112	KOHAT	66	0	1.03	68.0	No Change
113	KRM.GRHI	66	0	1.02	67.4	No Change
114	NSR CITY	66	0	1.04	68.3	No Change
115	SHABQDAR	66	0	1.02	67.2	No Change
116	SHAHIBAG	66	0	1.04	68.9	No Change
117	TAJAZAI	66	0	0.87	57.4	No Change
118	TALL	66	0	0.99	65.6	No Change
119	TIMRGARH	66	0	1.04	68.7	No Change
120	WARAI	66	0	0.98	65.0	No Change
121	CHT KLASS	33	0	0.99	32.8	No Change
122	DAROSH	33	0	1.02	33.7	No Change
123	DIR	33	0	1.03	33.9	No Change
124	JUTILIST	33	0	1.02	33.6	No Change
125	MAJUHI	33	0	1.00	33.0	No Change
126	MUZFRABD	33	0	1.01	33.3	No Change
127	PATTAN	33	0	1.03	34.1	No Change
128	RESHUN	33	0	1.02	33.7	No Change
129	SHISHI	33	0	1.02	33.7	No Change
130	THAKOT	33	0	1.04	34.4	No Change
		Total	**287.2**			

Reactive Power Study of PESCO

Off-Peak Load, Year 2015

Voltage Summary of 11 kV Bus Bars With Existing Capacitors

Sr. No.	Bus Name	Base kV	Existing Capacitors (MVAR)	Voltage (pu)	Voltage (kV)	Remarks
1	ABBOTABAD-T1	11	0	1.03	11.4	Capacitor Bank Switched Off
2	ABBOTABAD-T2	11	4.8	1.03	11.3	No Change
3	ABBOTABAD-T3	11	0	1.01	11.1	No Change
4	AYUB M.C-T1	11	4.4	1.04	11.5	No Change
5	AYUB M.C-T2	11	0	1.01	11.1	No Change
6	BADABER-T1	11	0	1.02	11.2	No Change
7	BADABER-T2	11	0	1.01	11.1	Capacitor Bank Switched Off
8	BALAKOT-T1	11	0	1.01	11.1	No Change
9	BANNU N-T1	11	0	1.03	11.3	No Change
10	BANNU N-T2	11	0	1.03	11.3	No Change
11	BANNU-T3	11	2.4	1.03	11.3	Capacitor Bank Reduced
12	BANNU-T4	11	0	1.05	11.5	Capacitor Bank Switched Off
13	BANNU-T5	11	0	1.04	11.5	Capacitor Bank Switched Off
14	BATAL-T1	11	0	1.02	11.2	No Change
15	BATAL-T2	11	0	1.02	11.2	No Change
16	BUNDKARI-T1	11	0	1.04	11.5	No Change
17	BUNDKARI-T2	11	0	1.05	11.5	Capacitor Bank Switched Off
18	CHAKDARA-T2	11	3.6	1.04	11.5	Capacitor Bank Reduced
19	CHAKDARA-T3	11	3.6	1.04	11.4	Capacitor Bank Reduced
20	CHAKDARA-T4	11	0	1.02	11.2	No Change
21	CHARSADA-T1	11	0	1.03	11.4	Capacitor Bank Switched Off
22	CHARSADA-T2	11	2.4	1.05	11.5	Capacitor Bank Reduced
23	CHARSADA-T3	11	0	1.03	11.3	No Change
24	CHT KLASS-T1	11	0	1.01	11.1	No Change
25	D.I.KH GM-T1	11	0	1.04	11.4	No Change
26	D.I.KH GM-T2	11	0	1.04	11.4	No Change
27	D.I.KHAN-T1	11	3.6	1.02	11.2	Capacitor Bank Reduced
28	D.I.KHAN-T3	11	3.6	1.02	11.2	Capacitor Bank Reduced
29	D.I.KHAN-T4	11	3.6	1.02	11.2	Capacitor Bank Reduced
30	DAGGAR-T1	11	1.2	1.04	11.4	No Change
31	DAGGAR-T2	11	0	1.04	11.4	No Change
32	DAGGAR-T3	11	0	1.03	11.4	No Change
33	DALZAK-T1	11	0	1.03	11.4	No Change
34	DALZAK-T2	11	0	1.04	11.5	No Change
35	DARABAN-T1	11	0	1.03	11.3	No Change
36	DARGAI-T1	11	0	1.00	11.0	No Change
37	DARGAI-T2	11	0	1.04	11.5	No Change
38	DARGAI-T3	11	0	1.01	11.1	No Change
39	DAROSH-T1	11	0	1.05	11.5	No Change
40	DIR-T1	11	0	1.01	11.1	No Change
41	DIR-T2	11	0	1.01	11.1	No Change
42	DOBIAN-T1	11	0	1.03	11.3	No Change
43	DOBIAN-T2	11	0	1.03	11.3	No Change
44	G.AMAZAI-T1	11	4.8	1.01	11.2	No Change
45	G.AMAZAI-T2	11	4.8	1.00	11.0	No Change

Voltage Summary of 11 kV Bus Bars With Existing Capacitors						
Sr. No.	Bus Name	Base kV	Existing Capacitors (MVAR)	Voltage (pu)	Voltage (kV)	Remarks
46	G.AMAZAI-T3	11	0	1.01	11.1	No Change
47	GUMBAT-T1	11	0	1.03	11.3	No Change
48	GUMBAT-T2	11	0	1.02	11.2	No Change
49	GURGURI-T1	11	0	1.02	11.2	Capacitor Bank Switched Off
50	HANGU-T1	11	3.4	1.04	11.4	No Change
51	HANGU-T2	11	0	1.02	11.2	Capacitor Bank Switched Off
52	HARIPUR-T2	11	0	1.04	11.4	No Change
53	HARIPUR-T3	11	6	1.04	11.4	No Change
54	HARIPUR-T3	11	0	1.02	11.2	No Change
55	HARIPUR-T4	11	3	1.03	11.3	No Change
56	HARIPUR-T5	11	0	1.02	11.2	No Change
57	HATTAR-T1	11	4.8	1.01	11.1	No Change
58	HATTAR-T2	11	4.8	1.01	11.1	No Change
59	HATTAR-T3	11	0	1.01	11.1	No Change
60	HATTIAN-T1	11	0	1.03	11.3	No Change
61	HAVELIAN-T1	11	2.4	1.04	11.5	No Change
62	HAVELIAN-T2	11	0	1.02	11.2	No Change
63	HAYATABD-T1	11	0	1.04	11.4	Capacitor Bank Switched Off
64	HAYATABD-T2	11	0	1.04	11.4	Capacitor Bank Switched Off
65	HAYATABD-T3	11	0	1.01	11.1	No Change
66	HUSSAI-T1	11	4.8	1.01	11.2	No Change
67	HUSSAI-T2	11	0	1.02	11.2	No Change
68	JALALA-T3	11	0	1.03	11.3	No Change
69	JALALA-T4	11	0	1.02	11.3	No Change
70	JALALA-T5	11	0	1.02	11.2	No Change
71	JAMRUD I-T1	11	12	1.03	11.3	No Change
72	JAMRUD I-T2	11	12	1.03	11.3	No Change
73	JAMRUD I-T3	11	0	1.00	11.0	No Change
74	JAMRUD I-T4	11	0	1.05	11.5	No Change
75	JEHANGRA-T1	11	2.4	1.05	11.5	No Change
76	JEHANGRA-T2	11	0	1.03	11.4	Capacitor Bank Switched Off
77	JEHANGRA-T3	11	0	1.02	11.2	No Change
78	JUTILIST-T1	11	0	1.01	11.1	No Change
79	JUTILIST-T2	11	0	1.01	11.1	No Change
80	K.KHELA-T1	11	4.8	1.04	11.4	No Change
81	K.KHELA-T2	11	0	1.00	11.0	No Change
82	K.T SHIP-T1	11	0	1.03	11.3	No Change
83	K.T SHIP-T2	11	0	1.03	11.3	No Change
84	KARAK-T1	11	0	1.01	11.2	Capacitor Bank Switched Off
85	KARAK-T2	11	0	1.01	11.2	No Change
86	KARAK-T3	11	0	1.01	11.2	No Change
87	KATLANG-T1	11	0	1.02	11.2	No Change
88	KATLANG-T2	11	0	1.04	11.4	No Change
89	KHESHKI-T1	11	0	1.03	11.4	No Change
90	KOHAT SP-T1	11	0	1.03	11.3	Capacitor Bank Switched Off
91	KOHAT SP-T2	11	6	1.04	11.4	Capacitor Bank Reduced
92	KOHAT-T4	11	0	1.02	11.2	No Change
93	KRM.GRHI-T1	11	2.1	1.02	11.2	No Change
94	KRM.GRHI-T2	11	0	1.04	11.4	No Change

Voltage Summary of 11 kV Bus Bars With Existing Capacitors						
Sr. No.	Bus Name	Base kV	Existing Capacitors (MVAR)	Voltage (pu)	Voltage (kV)	Remarks
95	KULACHI-T1	11	0	1.04	11.4	Capacitor Bank Switched Off
96	LACHI-T1	11	2.4	1.01	11.2	No Change
97	LACHI-T2	11	0	1.02	11.2	No Change
98	MADYAN-T1	11	0	1.03	11.3	No Change
99	MADYAN-T2	11	0	1.03	11.3	No Change
100	MAJUHI-T1	11	0	1.02	11.2	No Change
101	MANSEHRA-T1	11	4.8	1.05	11.5	No Change
102	MANSEHRA-T2	11	6	1.04	11.5	Capacitor Bank Reduced
103	MANSEHRA-T3	11	0	1.02	11.3	No Change
104	MARDAN 2-T1	11	2.2	1.03	11.3	No Change
105	MARDAN 2-T2	11	0	1.01	11.2	No Change
106	MARDAN-T1	11	0	1.04	11.4	No Change
107	MARDAN-T2	11	0	1.02	11.3	No Change
108	MATANI-T2	11	4.8	1.04	11.4	No Change
109	MATANI-T3	11	0	1.01	11.2	Capacitor Bank Switched Off
110	MATANI-T4	11	0	1.02	11.2	No Change
111	MUZAFABAD-T1	11	0	1.02	11.2	No Change
112	MUZAFABAD-T2	11	0	1.03	11.4	No Change
113	MUZAFABAD-T4	11	0	1.02	11.2	No Change
114	NATIAGALI-T1	11	0	1.00	11.0	No Change
115	NAUSERY-T1	11	0	1.02	11.3	No Change
116	NIZAMPUR-T1	11	0	1.04	11.4	Capacitor Bank Switched Off
117	NOWSHCITY-T1	11	0	1.05	11.5	Capacitor Bank Switched Off
118	NOWSHCITY-T3	11	0	1.04	11.5	Capacitor Bank Switched Off
119	NOWSHCITY-T4	11	0	1.04	11.5	No Change
120	NOWSHR I-T1	11	0	1.02	11.2	Capacitor Bank Switched Off
121	NOWSHR I-T2	11	0	1.03	11.4	Capacitor Bank Switched Off
122	NOWSHR I-T3	11	0	1.02	11.2	No Change
123	OGHI-T1	11	0	1.02	11.2	No Change
124	OGHI-T2	11	0	1.02	11.2	No Change
125	PABBI-T1	11	0	1.04	11.5	Capacitor Bank Switched Off
126	PABBI-T2	11	0	1.03	11.3	Capacitor Bank Switched Off
127	PABBI-T3	11	0	1.01	11.1	No Change
128	PAROVA-T1	11	0	1.05	11.5	No Change
129	PAROVA-T2	11	0	1.04	11.4	Capacitor Bank Switched Off
130	PAROVA-T3	11	0	1.05	11.5	No Change
131	PATTAN-T1	11	0	1.02	11.2	No Change
132	PESH CITY-T1	11	0	1.03	11.3	No Change
133	PESH CITY-T2	11	0	1.03	11.3	Capacitor Bank Switched Off
134	PESH CITY-T3	11	0	1.03	11.3	Capacitor Bank Switched Off
135	PESH FRT-T1	11	0	1.03	11.4	Capacitor Bank Switched Off
136	PESH FRT-T2	11	0	1.03	11.3	Capacitor Bank Switched Off
137	PESH IND-T1	11	7.2	1.03	11.4	No Change
138	PESH IND-T2	11	0	1.00	11.0	Capacitor Bank Switched Off
139	PESH IND-T3	11	0	1.02	11.2	No Change
140	PESH UNIV-T1	11	6.8	1.04	11.5	No Change
141	PESH UNIV-T2	11	0	1.04	11.4	Capacitor Bank Switched Off
142	PESH UNIV-T3	11	0	1.04	11.4	Capacitor Bank Switched Off
143	PESHCANT-T1	11	0	1.03	11.3	No Change

Voltage Summary of 11 kV Bus Bars With Existing Capacitors						
Sr. No.	Bus Name	Base kV	Existing Capacitors (MVAR)	Voltage (pu)	Voltage (kV)	Remarks
144	PESHCANT-T2	11	0	1.02	11.3	No Change
145	PESHCANT-T3	11	0	1.03	11.3	No Change
146	PESHCANT-T4	11	0	1.03	11.4	No Change
147	PEZU-T1	11	0	1.05	11.5	No Change
148	PEZU-T2	11	0	1.05	11.5	No Change
149	PPCCHARS-T1	11	0	1.04	11.4	No Change
150	R BABA-T1	11	0	1.04	11.4	No Change
151	R BABA-T2	11	0	1.03	11.3	No Change
152	R BABA-T3	11	0	1.02	11.3	No Change
153	RAJJAR-T1	11	0	1.04	11.5	No Change
154	RAJJAR-T2	11	0	1.01	11.1	No Change
155	S NURANG-T1	11	1.2	1.02	11.2	Capacitor Bank Reduced
156	S NURANG-T2	11	0	1.04	11.5	No Change
157	S NURANG-T3	11	0	1.04	11.5	No Change
158	SABIR ABD-T1	11	0	1.01	11.1	No Change
159	SAKHI CH-T1	11	0	1.03	11.3	Capacitor Bank Switched Off
160	SAKHI CH-T2	11	0	1.04	11.4	Capacitor Bank Switched Off
161	SAKHI CH-T3	11	0	1.01	11.1	No Change
162	SANGLAP-T1	11	0	1.00	11.0	No Change
163	SHABQADAR-T3	11	0	1.04	11.4	Capacitor Bank Switched Off
164	SHABQADAR-T4	11	0	1.02	11.3	Capacitor Bank Switched Off
165	SHABQADAR-T5	11	0	1.02	11.3	No Change
166	SHAHIBAGH-T3	11	0	1.04	11.4	Capacitor Bank Switched Off
167	SHAHIBAGH-T5	11	0	1.04	11.4	Capacitor Bank Switched Off
168	SHAHIBAGH-T6	11	0	1.03	11.3	No Change
169	SHAIBG N-T1	11	0	1.04	11.4	No Change
170	SHAIBG N-T2	11	0	1.03	11.4	No Change
171	SHMUHDI-T1	11	0	1.02	11.2	No Change
172	SHMUHDI-T2	11	0	1.02	11.2	No Change
173	SIRAJ BBA-T1	11	0	1.03	11.3	No Change
174	SIRAJ BBA-T2	11	0	1.03	11.3	No Change
175	SWABI-T1	11	4.8	1.01	11.1	No Change
176	SWABI-T2	11	2.4	1.03	11.3	Capacitor Bank Reduced
177	SWABI-T3	11	0	1.02	11.2	No Change
178	SWAT-T1	11	0	1.01	11.1	No Change
179	SWAT-T2	11	0	1.01	11.1	No Change
180	SWAT-T3	11	0	1.04	11.4	No Change
181	SWAT-T5	11	0	1.02	11.2	No Change
182	TAJAZAI-T1	11	0	1.02	11.2	Capacitor Bank Switched Off
183	TAJAZAI-T1 (66k'	11	1.8	0.96	10.6	No Change
184	TAJAZAI-T2	11	0	1.02	11.2	Capacitor Bank Switched Off
185	TAJAZAI-T2 (66k'	11	0	0.95	10.4	No Change
186	TALL-T2	11	0	1.03	11.3	Capacitor Bank Switched Off
187	TALL-T3	11	0	1.03	11.3	Capacitor Bank Switched Off
188	TANGI-T1	11	0	1.02	11.3	Capacitor Bank Switched Off
189	TANGI-T2	11	0	1.03	11.3	Capacitor Bank Switched Off
190	TANGI-T3	11	0	1.02	11.2	No Change
191	TANK-T4	11	0	1.04	11.4	No Change
192	TANK-T6	11	0	1.04	11.4	No Change

Voltage Summary of 11 kV Bus Bars With Existing Capacitors						
Sr. No.	**Bus Name**	**Base kV**	**Existing Capacitors (MVAR)**	**Voltage (pu)**	**Voltage (kV)**	**Remarks**
193	TANK-T7	11	0	1.04	11.4	No Change
194	TARBELA N-T1	11	4.8	1.04	11.4	No Change
195	TARBELA N-T2	11	0	1.00	11.0	No Change
196	TARBELA R-T1	11	4.8	1.01	11.1	No Change
197	TARBELA R-T2	11	0	1.04	11.4	Capacitor Bank Switched Off
198	TARBELA R-T3	11	0	1.01	11.1	No Change
199	THAKOT-T1	11	0	1.05	11.5	No Change
200	THAKOT-T2	11	0	1.05	11.5	No Change
201	TIMERGARA-T2	11	0	1.04	11.4	Capacitor Bank Switched Off
202	TIMERGARA-T3	11	0	1.04	11.4	No Change
203	TIMERGARA-T4	11	0	1.04	11.4	No Change
204	TIMRGARH-T1	11	0	1.02	11.3	No Change
205	TIMRGARH-T2	11	0	1.02	11.3	Capacitor Bank Switched Off
206	WARAI-T1	11	0	1.02	11.2	No Change
207	WARSAK-T1	11	0	1.04	11.5	No Change
208	WARSAK-T2	11	0	1.04	11.5	No Change
209	WARSAK-T3	11	0	1.02	11.2	No Change
		Total	**165.3**			

Reactive Power Compensation Study of PESCO

With Existing Capacitor Banks

Off-Peak Load : Year 2015

Exhibit No. 2015-2.1

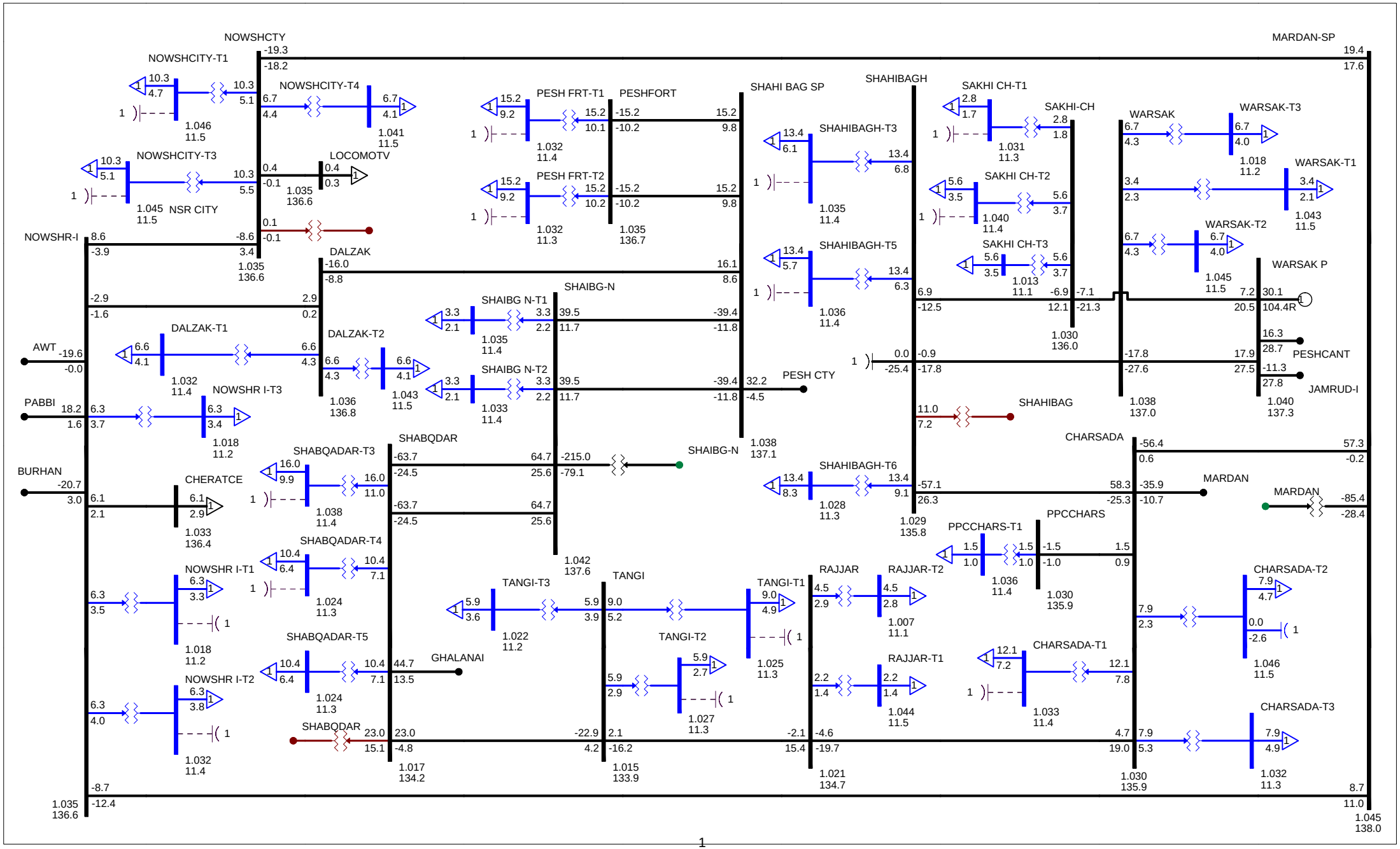

Reactive Power Compensation Study of PESCO

With Existing Capacitor Banks

Off-Peak Load : Year 2015

Exhibit No. 2015-2.2

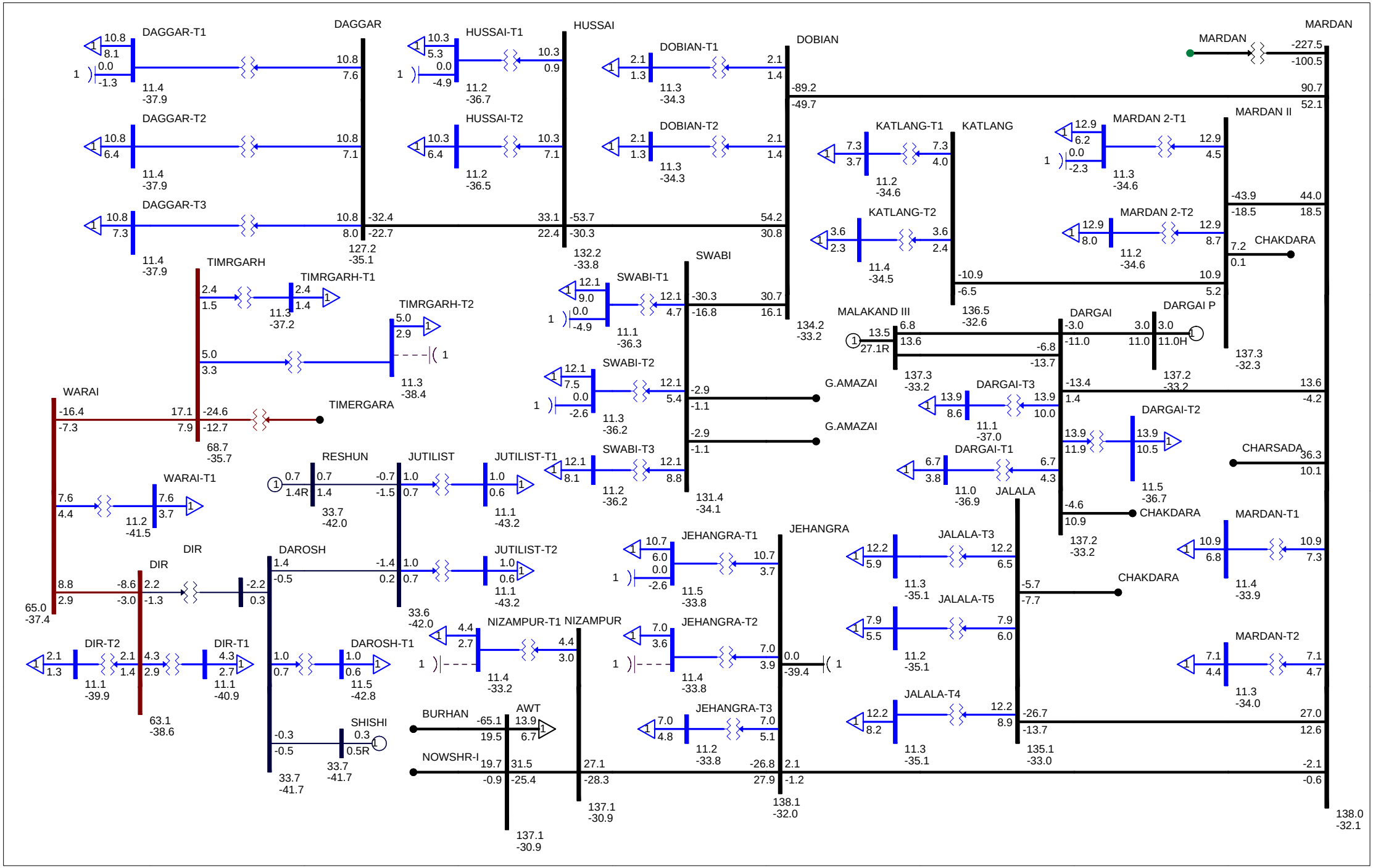

Reactive Power Compensation Study of PESCO

With Existing Capacitor Banks

Off-Peak Load : Year 2015

Exhibit No. 2015-2.3

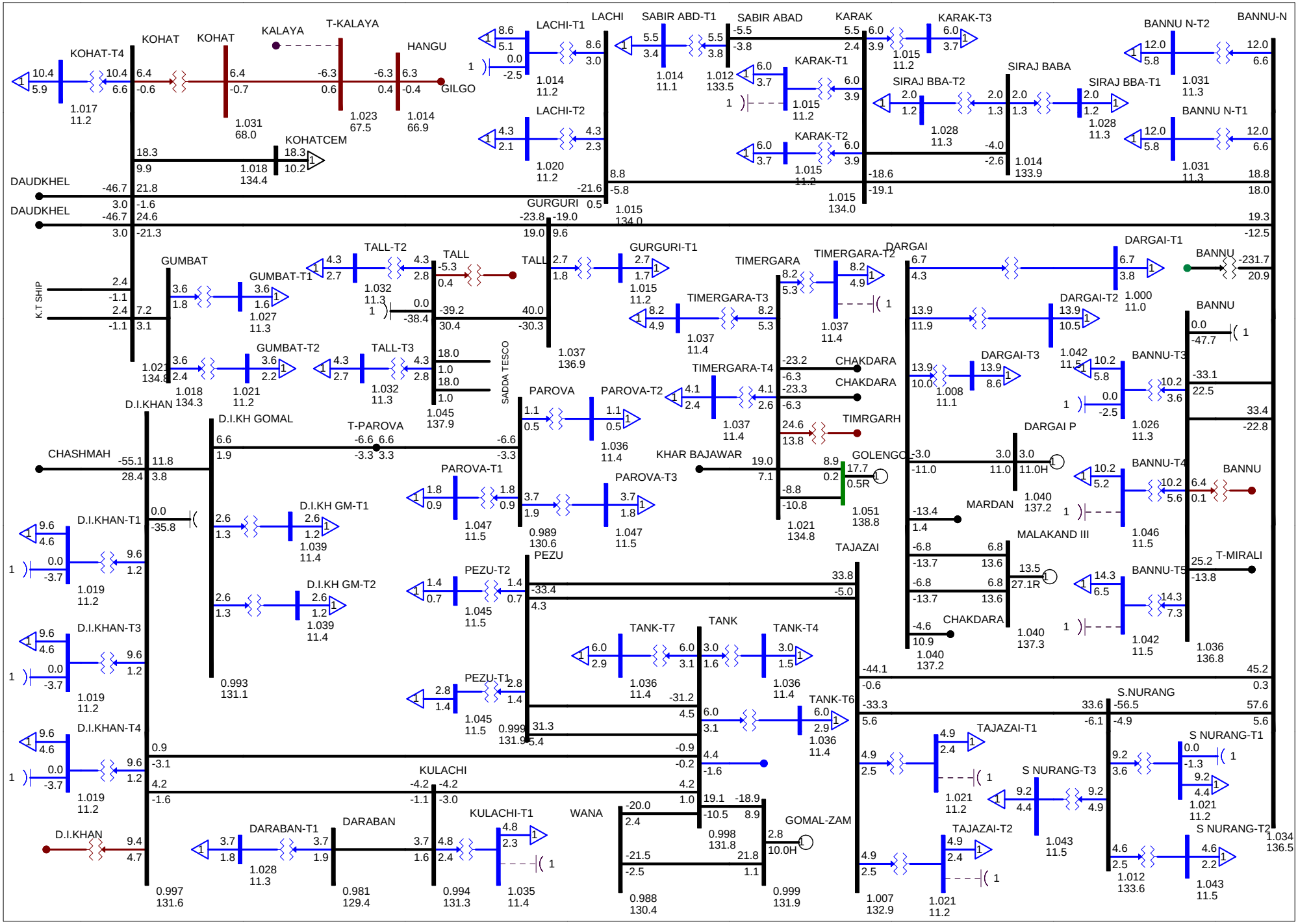

Reactive Power Compensation Study of PESCO

With Existing Capacitor Banks

Off-Peak Load : Year 2015

Exhibit No. 2015-2.4

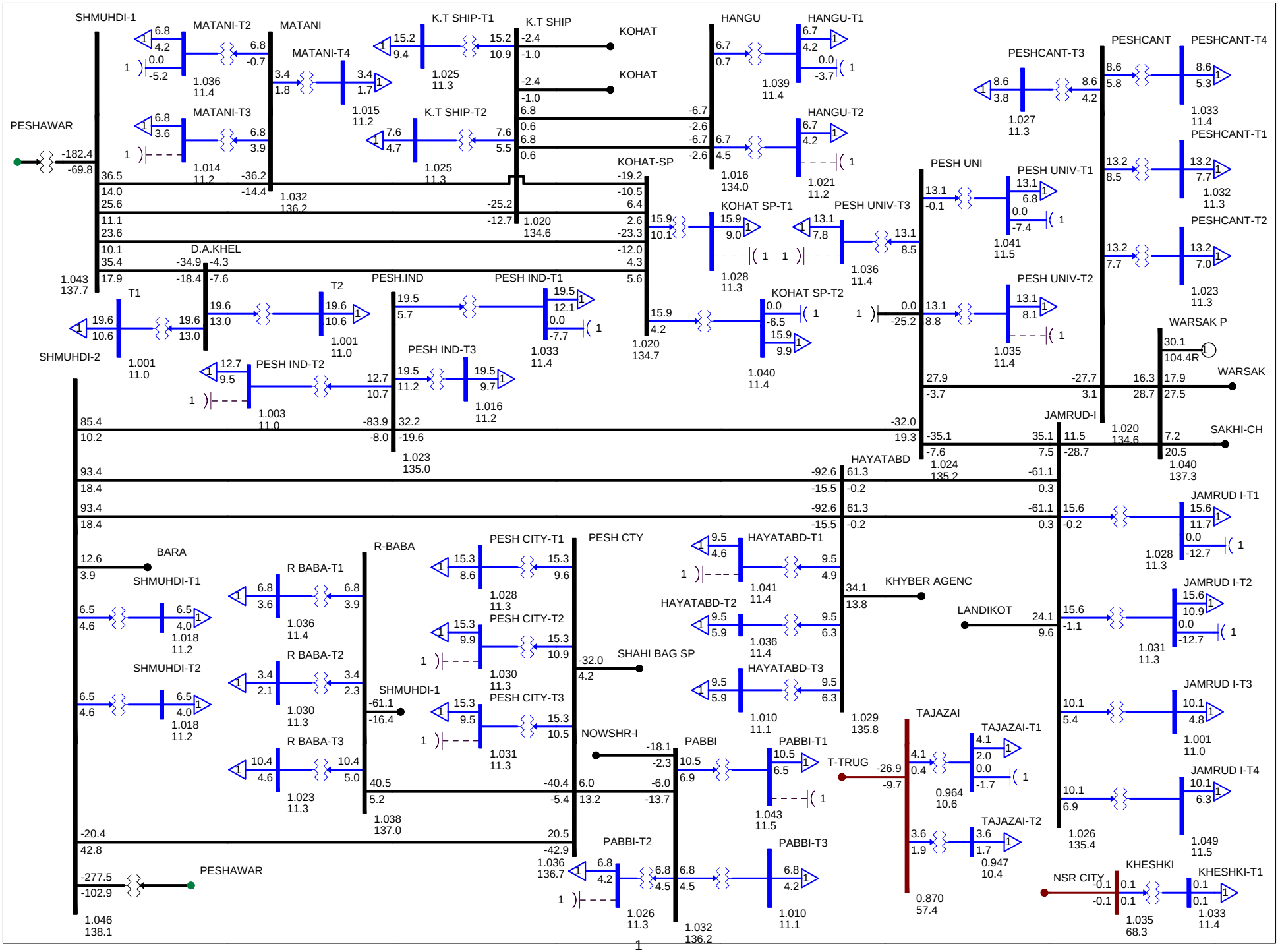

Reactive Power Compensation Study of PESCO

With Existing Capacitor Banks

Off-Peak Load : Year 2015

Exhibit No. 2015-2.5

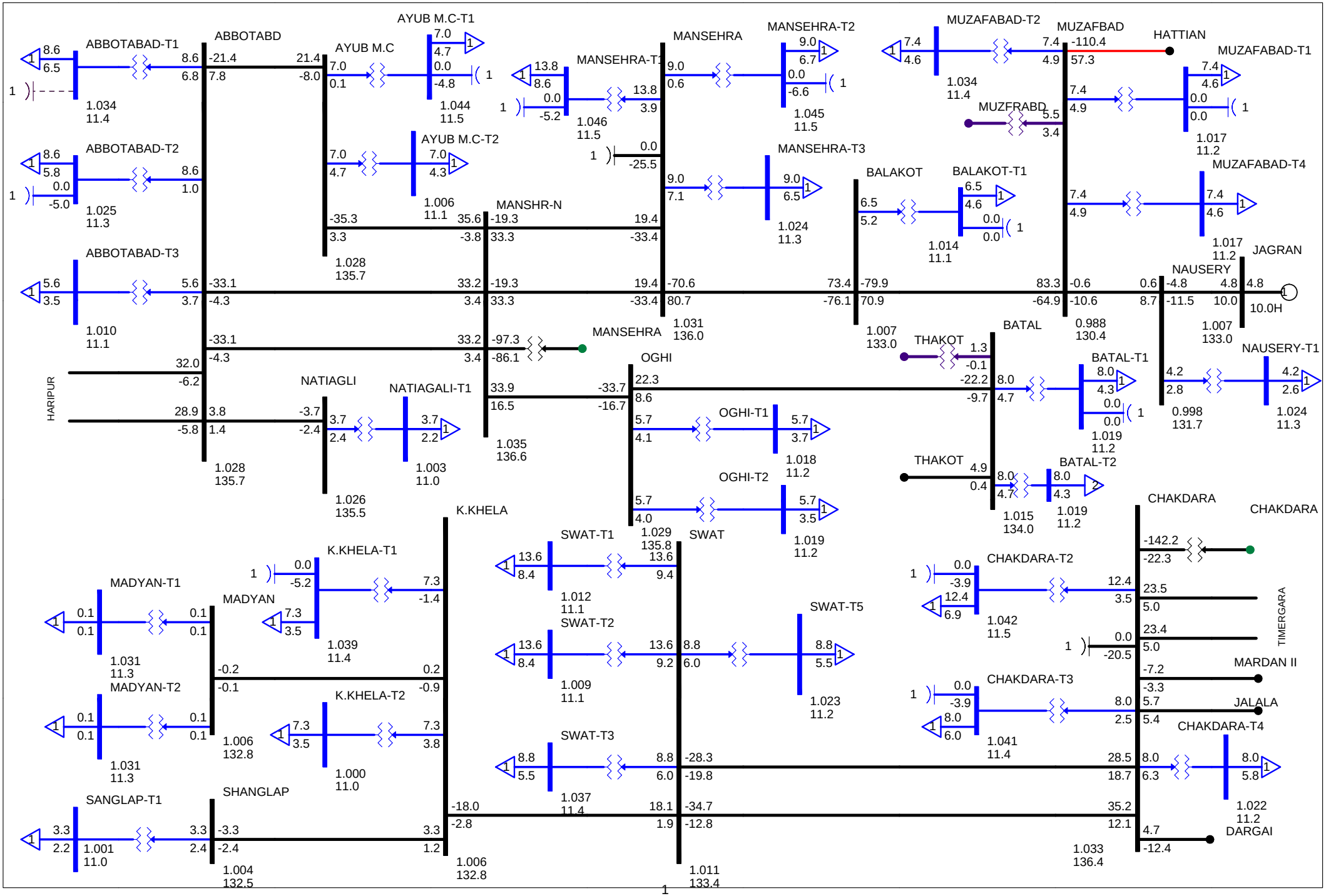

Reactive Power Compensation Study of PESCO

With Existing Capacitor Banks

Off-Peak Load : Year 2015

Exhibit No. 2015-2.6

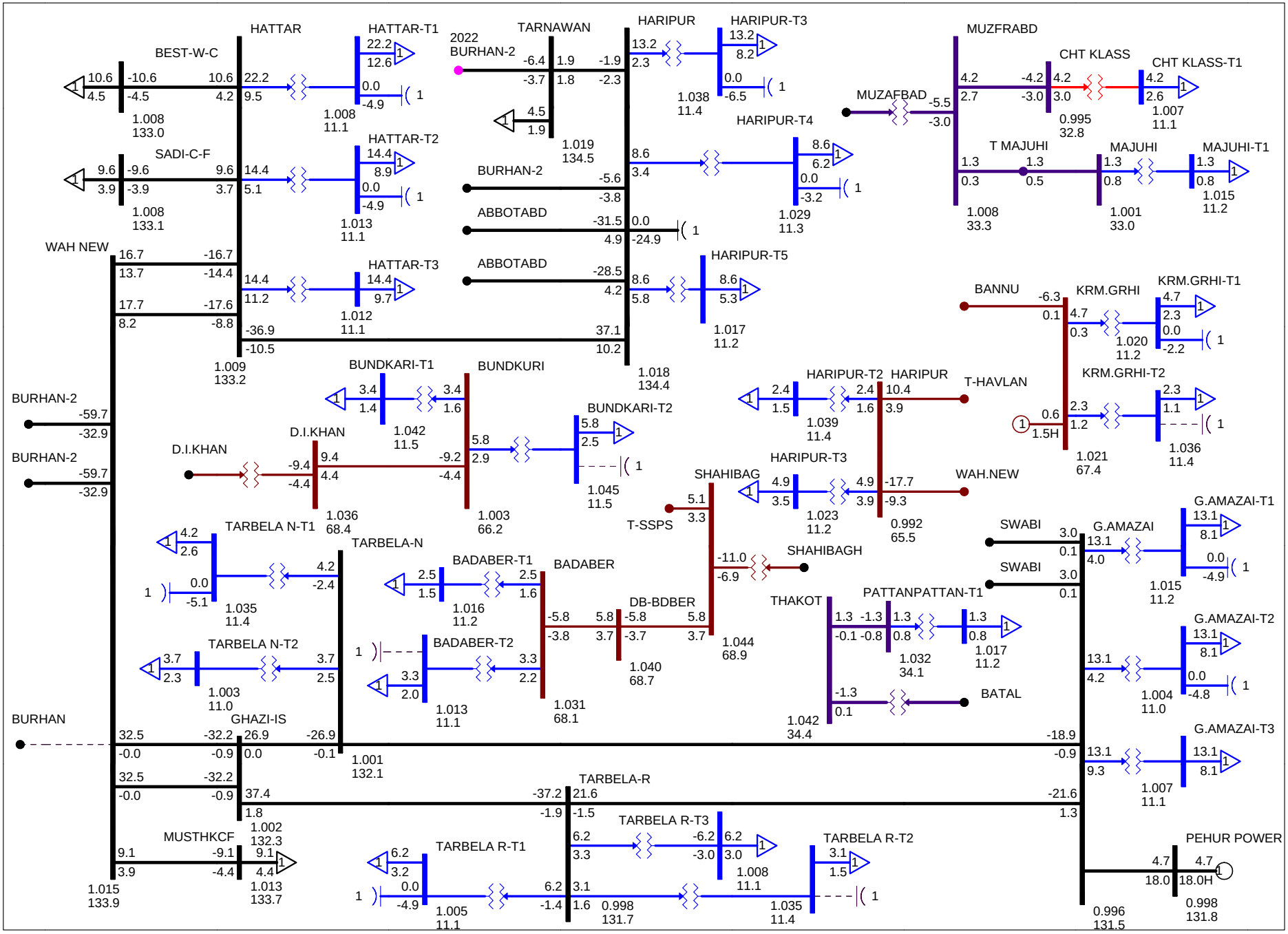

Appendix C

Additional Capacitor Banks Required Till 2015

C-I: Voltage Summary of Bus Bars - Peak Load 2015 with Additional Capacitors

C-2: Load Flow Plots Peak Load-2015 with Additional Capacitors

C-3: Reduction in MVA Loading of Transmission Lines - Peak Load 2015 with Additional Capacitors

C-4: Reduction in MVA Loading of HV/LV Transformers (132/11 kV, 66/11 kV & 33/11 kV) - Peak Load 2015 with Additional Capacitors

Reactive Power Compensation Study of PESCO

Peak Load, Year 2015

Voltage Summary of 132, 66 and 33 kV Bus Bars After Addition of Capacitors Obtained from OPF and Contingency

Sr. No.	Bus Name	Base kV	Existing Capacitors	Reduction in Existing Capacitors	Capacitors Required till 2015 Base Case (OPF)	Capacitors Required to Meet (N-1) Contingency	Final List of Capacitors required till 2015	Voltage (pu)	Voltage (kV)	Remarks
1	ABBOTABD	132	0	0	0	0	0	1.04	137.1	No Change
2	ALAI-KHR	132	0	0	0	0	0	1.03	135.4	No Change
3	AWT	132	0	0	0	0	0	1.04	136.8	No Change
4	AYUB M.C	132	0	0	0	0	0	1.04	137.0	No Change
5	BALAKOT	132	0	0	0	0	0	1.02	134.9	No Change
6	BANNU	132	44.4	0	0	0	44.4	1.04	137.2	No Change
7	BANNU-N	132	0	0	0	0	0	1.05	138.4	No Change
8	BATAL	132	0	0	0	0	0	1.02	134.2	No Change
9	BEST-W-C	132	0	0	0	0	0	1.04	136.6	No Change
10	CHAKDARA	132	39.6	-39.6	0	0	0	1.02	134.4	Reduced
11	CHARSADA	132	0	0	0	0	0	1.02	135.0	No Change
12	CHERATCE	132	0	0	0	0	0	1.03	135.6	No Change
13	D.I.KH GOMAL	132	0	0	0	0	0	1.01	133.7	No Change
14	D.I.KHAN	132	36	0	0	0	36	1.01	133.9	No Change
15	DAGGAR	132	0	0	0	0	0	0.98	129.4	No Change
16	DALZAK	132	0	0	0	0	0	1.03	136.6	No Change
17	DARABAN	132	0	0	0	0	0	1.00	131.8	No Change
18	DARGAI	132	0	0	0	0	0	1.04	137.8	No Change
19	DARGAI P	132	0	0	0	0	0	1.04	137.8	No Change
20	DBR-KHWR	132	0	0	0	0	0	1.04	137.3	No Change
21	DOBIAN	132	0	0	0	0	0	1.02	134.5	No Change
22	G.AMAZAI	132	0	0	0	0	0	1.02	134.3	No Change
23	GHAZI-IS	132	0	0	0	0	0	1.03	135.5	No Change
24	GOLENGOL	132	0	0	0	0	0	1.05	138.8	No Change
25	GOMAL-ZAM	132	0	0	0	0	0	1.03	135.7	No Change
26	GUMBAT	132	0	0	0	0	0	1.02	134.5	No Change
27	GURGURI	132	0	0	0	0	0	1.04	136.7	No Change
28	HANGU	132	0	0	0	0	0	1.01	133.7	No Change
29	HARIPUR	132	24	0	0	0	24	1.04	137.3	No Change
30	HATTAR	132	0	0	0	0	0	1.04	136.9	No Change
31	HATTIAN	132	0	0	0	0	0	1.00	131.7	No Change
32	HAYATABD	132	0	0	0	0	0	1.03	136.2	No Change
33	HUSSAI	132	0	0	0	0	0	1.01	133.0	No Change
34	JAGRAN	132	0	0	0	0	0	1.04	136.6	No Change
35	JALALA	132	0	0	0	0	0	1.01	133.7	No Change
36	JAMRUD-I	132	0	0	0	0	0	1.03	135.7	No Change
37	JEHANGRA	132	36	0	0	0	36	1.04	136.9	No Change
38	K.KHELA	132	0	0	0	0	0	1.00	132.5	No Change
39	K.T SHIP	132	0	0	0	0	0	1.02	134.6	No Change
40	KARAK	132	0	0	0	0	0	1.03	135.9	No Change
41	KATLANG	132	0	0	0	0	0	1.02	135.0	No Change
42	KHANKHWR	132	0	0	0	0	0	1.03	136.2	No Change
43	KOHAT	132	0	0	0	0	0	1.02	134.8	No Change
44	KOHATCEM	132	0	0	0	0	0	1.02	134.2	No Change
45	KOHAT-SP	132	0	0	0	0	0	1.02	134.6	No Change
46	KULACHI	132	0	0	0	0	0	1.01	133.9	No Change
47	LACHI	132	0	0	0	0	0	1.02	134.8	No Change
48	LOCOMOTV	132	0	0	0	0	0	1.03	135.7	No Change
49	MADYAN	132	0	0	0	0	0	1.00	132.5	No Change
50	MALAKAND III	132	0	0	0	0	0	1.05	137.9	No Change
51	MANSEHRA	132	24	0	0	0	24	1.04	137.0	No Change
52	MANSHR-N	132	0	0	0	0	0	1.04	137.5	No Change
53	MARDAN	132	0	0	0	0	0	1.04	136.9	No Change
54	MARDAN II	132	0	0	0	0	0	1.03	136.1	No Change
55	MARDAN-SP	132	0	0	0	0	0	1.04	136.8	No Change

Voltage Summary of 132, 66 and 33 kV Bus Bars After Addition of Capacitors Obtained from OPF and Contingency										
Sr. No.	Bus Name	Base kV	Existing Capacitors	Reduction in Existing Capacitors	Capacitors Required till 2015 Base Case (OPF)	Capacitors Required to Meet (N-1) Contingency	Final List of Capacitors required till 2015	Voltage (pu)	Voltage (kV)	Remarks
56	MATANI	132	0	0	0	0	0	1.03	136.6	No Change
57	MUSTHKCF	132	0	0	0	0	0	1.04	137.8	No Change
58	MUZAFBAD	132	0	0	0	0	0	1.01	132.7	No Change
59	NATIAGLI	132	0	0	0	0	0	1.04	136.9	No Change
60	NAUSERY	132	0	0	0	0	0	1.02	134.9	No Change
61	NIZAMPUR	132	0	0	0	0	0	1.04	136.7	No Change
62	NOWSHCTY	132	0	0	0	0	0	1.03	135.7	No Change
63	NOWSHR-I	132	0	0	0	0	0	1.03	136.0	No Change
64	OGHI	132	0	0	0	0	0	1.03	136.6	No Change
65	PABBI	132	0	0	0	0	0	1.03	135.9	No Change
66	PAROVA	132	0	0	0	0	0	1.01	133.7	No Change
67	PEHUR POWER	132	0	0	0	0	0	1.02	134.6	No Change
68	PESH CTY	132	0	0	0	0	0	1.04	136.7	No Change
69	PESH UNI	132	24	0	0	0	24	1.03	135.4	No Change
70	PESH.IND	132	0	0	0	0	0	1.02	135.2	No Change
71	PESHCANT	132	0	0	0	0	0	1.02	134.8	No Change
72	PESHFORT	132	0	0	0	0	0	1.03	136.5	No Change
73	PEZU	132	0	0	0	0	0	1.02	134.6	No Change
74	PPCCHARS	132	0	0	0	0	0	1.02	135.0	No Change
75	RAJJAR	132	0	0	0	0	0	1.02	134.2	No Change
76	R-BABA	132	0	0	0	0	0	1.04	137.3	No Change
77	S.NURANG	132	0	0	0	0	0	1.03	136.0	No Change
78	SABIR ABAD	132	0	0	0	0	0	1.02	135.2	No Change
79	SADI-C-F	132	0	0	0	0	0	1.04	136.7	No Change
80	SAKHI-CH	132	0	0	0	0	0	1.03	135.8	No Change
81	SHABQDAR	132	0	0	0	0	0	1.02	134.3	No Change
82	SHAHI BAG SP	132	0	0	0	0	0	1.04	137.0	No Change
83	SHAHIBAGH	132	24	0	0	0	24	1.03	135.5	No Change
84	SHAIBG-N	132	0	0	0	0	0	1.04	137.7	No Change
85	SHANGLAP	132	0	0	0	0	0	1.00	132.4	No Change
86	SHMUHDI-1	132	0	0	0	0	0	1.05	138.5	No Change
87	SHMUHDI-2	132	0	0	0	0	0	1.05	138.3	No Change
88	SIRAJ BABA	132	0	0	0	0	0	1.03	135.7	No Change
89	SWABI	132	0	0	0	0	0	1.01	133.5	No Change
90	SWAT	132	0	0	0	0	0	1.01	132.9	No Change
91	TAJAZAI	132	0	0	0	0	0	1.03	135.4	No Change
92	TALL	132	35.2	-5.2	0	0	30	1.04	137.0	Reduced
93	TANGI	132	0	0	0	0	0	1.01	133.8	No Change
94	TANK	132	0	0	0	0	0	1.02	134.9	No Change
95	TARBELA-N	132	0	0	0	0	0	1.02	135.3	No Change
96	TARBELA-R	132	0	0	0	0	0	1.02	134.7	No Change
97	TARNAWAN	132	0	0	0	0	0	1.04	137.6	No Change
98	THAKOT	132	0	0	0	0	0	1.01	132.9	No Change
99	TIMERGARA	132	0	0	0	0	0	1.01	133.1	No Change
100	WARSAK	132	0	0	0	0	0	1.04	137.0	No Change
101	WARSAK P	132	0	0	0	0	0	1.04	137.3	No Change
102	BADABER	66	0	0	0	0	0	1.03	67.8	No Change
103	BANNU	66	0	0	0	0	0	1.04	68.7	No Change
104	BUNDKURI	66	0	0	0	0	0	0.99	65.7	No Change
105	D.I.KHAN	66	0	0	0	0	0	1.04	68.7	No Change
106	DB-BDBER	66	0	0	0	0	0	1.04	68.6	No Change
107	DIR	66	0	0	0	0	0	0.97	64.2	No Change
108	HANGU	66	0	0	0	0	0	1.00	66.1	No Change
109	HARIPUR	66	0	0	0	0	0	1.01	66.9	No Change
110	HAVELIAN	66	0	0	0	0	0	0.99	65.5	No Change
111	KHESHKI	66	0	0	0	0	0	1.03	67.8	No Change
112	KOHAT	66	0	0	0	0	0	1.03	68.1	No Change
113	KRM.GRHI	66	0	0	0	0	0	1.02	67.4	No Change

Voltage Summary of 132, 66 and 33 kV Bus Bars After Addition of Capacitors Obtained from OPF and Contingency										
Sr. No.	**Bus Name**	**Base kV**	**Existing Capacitors**	**Reduction in Existing Capacitors**	**Capacitors Required till 2015 Base Case (OPF)**	**Capacitors Required to Meet (N-1) Contingency**	**Final List of Capacitors required till 2015**	**Voltage (pu)**	**Voltage (kV)**	**Remarks**
114	NSR CITY	66	0	0	0	0	0	1.03	67.8	No Change
115	SHABQDAR	66	0	0	0	0	0	1.04	68.4	No Change
116	SHAHIBAG	66	0	0	0	0	0	1.04	68.8	No Change
117	TAJAZAI	66	0	0	0	0	0	1.01	66.6	No Change
118	TALL	66	0	0	0	0	0	1.02	67.1	No Change
119	TIMRGARH	66	0	0	0	0	0	1.03	67.8	No Change
120	WARAI	66	0	0	0	0	0	0.99	65.2	No Change
121	CHT KLASS	33	0	0	0	0	0	1.03	34.0	No Change
122	DAROSH	33	0	0	0	0	0	1.02	33.8	No Change
123	DIR	33	0	0	0	0	0	1.03	33.9	No Change
124	JUTILIST	33	0	0	0	0	0	1.03	33.8	No Change
125	MAJUHI	33	0	0	0	0	0	1.03	33.9	No Change
126	MUZFRABD	33	0	0	0	0	0	1.04	34.3	No Change
127	PATTAN	33	0	0	0	0	0	1.02	33.8	No Change
128	RESHUN	33	0	0	0	0	0	1.03	33.9	No Change
129	SHISHI	33	0	0	0	0	0	1.03	33.8	No Change
130	THAKOT	33	0	0	0	0	0	1.03	34.1	No Change
		Total	**287.2**	**-44.8**	**0**	**0**	**242.4**			

Reactive Power Compensation Study of PESCO

Peak Load, Year 2015

Voltage Summary of 11 KV Bus Bars After Addition of Capacitors Obtained from OPF and Contingency

Sr. No.	Bus Name	Base kV	Existing Capacitors	Reduction in existing capacitors	Capacitors Required till 2015 Base Case (OPF)	Capacitors Required to Meet (N-1) Contingency	Final List of Capacitors required till 2015	Voltage (pu)	Voltage (kV)	Remarks
1	ABBOTABAD-T1	11	6.4	0	0.8	0	7.2	1.04	11.5	New Addition
2	ABBOTABAD-T2	11	4.8	0	4.8	0	9.6	1.04	11.4	New Addition
3	ABBOTABAD-T3	11	0	0	6	0	6	1.04	11.5	New Addition
4	AYUB M.C-T1	11	4.4	0	0.4	0	4.8	1.04	11.4	New Addition
5	AYUB M.C-T2	11	0	0	6	0	6	1.03	11.4	New Addition
6	BADABER-T1	11	0	0	1.2	0	1.2	1.04	11.4	New Addition
7	BADABER-T2	11	7.2	-4.8	0	0	2.4	1.03	11.3	Reduced
8	BALAKOT-T1	11	0	0	7.2	3.6	10.8	1.04	11.5	New Addition
9	BANNU N-T1	11	0	0	6	0	6	1.05	11.5	New Addition
10	BANNU N-T2	11	0	0	6	0	6	1.05	11.5	New Addition
11	BANNU-T3	11	7.2	-1.2	0	0	6	1.04	11.5	Reduced
12	BANNU-T4	11	3	0	6.6	0	9.6	1.04	11.5	New Addition
13	BANNU-T5	11	7.2	-1.2	0	0	6	1.04	11.5	Reduced
14	BATAL-T1	11	0	0	4.8	0	4.8	1.03	11.3	New Addition
15	BATAL-T2	11	0	0	4.8	0	4.8	1.03	11.3	New Addition
16	BUNDKARI-T1	11	0	0	1.2	0	1.2	1.03	11.4	New Addition
17	BUNDKARI-T2	11	2.4	0	0	3.6	6	1.03	11.3	New Addition
18	CHAKDARA-T2	11	4.6	0	5	0	9.6	1.01	11.1	New Addition
19	CHAKDARA-T3	11	4.2	0	4.2	0	8.4	1.04	11.4	New Addition
20	CHAKDARA-T4	11	0	0	4.8	0	4.8	1.02	11.2	New Addition
21	CHARSADA-T1	11	4.8	0	0	0	4.8	1.02	11.3	No Change
22	CHARSADA-T2	11	7.2	0	0	0	7.2	1.03	11.4	No Change
23	CHARSADA-T3	11	0	0	2.4	0	2.4	1.02	11.2	New Addition
24	CHT KLASS-T1	11	0	0	3.6	1.2	4.8	1.04	11.5	New Addition
25	D.I.KH GM-T1	11	0	0	1.2	2.4	3.6	1.03	11.4	New Addition
26	D.I.KH GM-T2	11	0	0	1.2	0	1.2	1.03	11.4	New Addition
27	D.I.KHAN-T1	11	4.8	0	0	0	4.8	1.03	11.3	No Change
28	D.I.KHAN-T3	11	4.8	0	0	3.6	8.4	1.04	11.4	New Addition
29	D.I.KHAN-T4	11	4.8	0	0	0	4.8	1.03	11.3	No Change
30	DAGGAR-T1	11	1.2	0	13.2	0	14.4	1.04	11.4	New Addition
31	DAGGAR-T2	11	0	0	8.4	0	8.4	1.02	11.2	New Addition
32	DAGGAR-T3	11	0	0	14.4	0	14.4	1.03	11.3	New Addition
33	DALZAK-T1	11	0	0	1.2	0	1.2	1.03	11.4	New Addition
34	DALZAK-T2	11	0	0	4.8	0	4.8	1.03	11.3	New Addition
35	DARABAN-T1	11	0	0	2.4	3.6	6	1.03	11.4	New Addition
36	DARGAI-T1	11	0	0	4.8	0	4.8	1.03	11.3	New Addition
37	DARGAI-T2	11	0	0	13.2	0	13.2	1.02	11.2	New Addition
38	DARGAI-T3	11	0	0	10.8	0	10.8	1.02	11.3	New Addition
39	DAROSH-T1	11	0	0	0	0	0	1.04	11.5	No Change
40	DIR-T1	11	0	0	6	2.4	8.4	1.03	11.3	New Addition
41	DIR-T2	11	0	0	3.6	2.4	6	1.03	11.3	New Addition
42	DOBIAN-T1	11	0	0	4.8	13.2	18	1.03	11.4	New Addition
43	DOBIAN-T2	11	0	0	0	6	6	1.04	11.4	New Addition
44	G.AMAZAI-T1	11	4.8	0	7.2	2.4	14.4	1.02	11.2	New Addition
45	G.AMAZAI-T2	11	4.8	0	9.6	0	14.4	1.02	11.2	New Addition
46	G.AMAZAI-T3	11	0	0	14.4	0	14.4	1.02	11.2	New Addition
47	GUMBAT-T1	11	0	0	2.4	0	2.4	1.04	11.5	New Addition
48	GUMBAT-T2	11	0	0	3.6	0	3.6	1.05	11.5	New Addition
49	GURGURI-T1	11	4.8	-1.2	0	0	3.6	1.05	11.5	Reduced
50	HANGU-T1	11	3.4	0	1.4	0	4.8	1.03	11.3	New Addition
51	HANGU-T2	11	4.8	0	0	0	4.8	1.03	11.3	No Change
52	HARIPUR-T2	11	0	0	3.6	0	3.6	1.04	11.5	New Addition
53	HARIPUR-T3	11	6	0	0	0	6	1.04	11.5	No Change
54	HARIPUR-T3	11	0	0	4.8	0	4.8	1.04	11.5	New Addition
55	HARIPUR-T4	11	3	0	3	0	6	1.05	11.5	New Addition
56	HARIPUR-T5	11	0	0	3.6	0	3.6	1.04	11.4	New Addition
57	HATTAR-T1	11	4.8	0	10.8	0	15.6	1.03	11.4	New Addition
58	HATTAR-T2	11	4.8	0	8.4	0	13.2	1.04	11.5	New Addition
59	HATTAR-T3	11	0	0	10.8	0	10.8	1.04	11.4	New Addition
60	HATTIAN-T1	11	0	0	8.4	1.2	9.6	1.03	11.3	New Addition
61	HAVELIAN-T1	11	2.4	0	9.6	0	12	1.05	11.5	New Addition
62	HAVELIAN-T2	11	0	0	4.8	0	4.8	1.05	11.5	New Addition
63	HAYATABD-T1	11	6.8	0	0.4	0	7.2	1.04	11.5	New Addition
64	HAYATABD-T2	11	7.2	0	0	0	7.2	1.04	11.4	No Change
65	HAYATABD-T3	11	0	0	10.8	0	10.8	1.04	11.4	New Addition
66	HUSSAI-T1	11	4.8	0	4.8	6	15.6	1.03	11.4	New Addition
67	HUSSAI-T2	11	0	0	10.8	7.2	18	1.04	11.4	New Addition
68	JALALA-T3	11	0	0	3.6	7.2	10.8	1.03	11.3	New Addition
69	JALALA-T4	11	0	0	8.4	2.4	10.8	1.02	11.3	New Addition

Voltage Summary of 11 KV Bus Bars After Addition of Capacitors Obtained from OPF and Contingency										
Sr. No.	Bus Name	Base kV	Existing Capacitors	Reduction in existing capacitors	Capacitors Required till 2015 Base Case (OPF)	Capacitors Required to Meet (N-1) Contingency	Final List of Capacitors required till 2015	Voltage (pu)	Voltage (kV)	Remarks
70	JALALA-T5	11	0	0	8.4	1.2	9.6	1.04	11.5	New Addition
71	JAMRUD I-T1	11	12	0	9.6	0	21.6	1.04	11.4	New Addition
72	JAMRUD I-T2	11	12	0	8.4	0	20.4	1.04	11.4	New Addition
73	JAMRUD I-T3	11	0	0	9.6	0	9.6	1.04	11.4	New Addition
74	JAMRUD I-T4	11	0	0	1.2	0	1.2	1.03	11.4	New Addition
75	JEHANGRA-T1	11	2.4	0	0	0	2.4	1.02	11.2	No Change
76	JEHANGRA-T2	11	6	0	0	0	6	1.04	11.5	No Change
77	JEHANGRA-T3	11	0	0	0	0	0	1.02	11.3	No Change
78	JUTILIST-T1	11	0	0	1.2	0	1.2	1.04	11.5	New Addition
79	JUTILIST-T2	11	0	0	1.2	0	1.2	1.04	11.5	New Addition
80	K.KHELA-T1	11	4.8	0	1.2	1.2	7.2	1.02	11.3	New Addition
81	K.KHELA-T2	11	0	0	9.6	1.2	10.8	1.02	11.2	New Addition
82	K.T SHIP-T1	11	0	0	13.2	0	13.2	1.03	11.3	New Addition
83	K.T SHIP-T2	11	0	0	6	0	6	1.02	11.3	New Addition
84	KARAK-T1	11	3.6	0	2.4	4.8	10.8	1.04	11.4	New Addition
85	KARAK-T2	11	0	0	6	3.6	9.6	1.03	11.3	New Addition
86	KARAK-T3	11	0	0	6	3.6	9.6	1.03	11.3	New Addition
87	KATLANG-T1	11	0	0	4.8	2.4	7.2	1.04	11.4	New Addition
88	KATLANG-T2	11	0	0	0	4.8	4.8	1.02	11.3	New Addition
89	KHESHKI-T1	11	0	0	0	0	0	1.02	11.3	No Change
90	KOHAT SP-T1	11	7.2	0	0	0	7.2	1.03	11.3	No Change
91	KOHAT SP-T2	11	7.2	0	2.4	0	9.6	1.03	11.3	New Addition
92	KOHAT-T4	11	0	0	14.4	0	14.4	1.05	11.5	New Addition
93	KRM.GRHI-T1	11	2.1	0	2.7	0	4.8	1.03	11.4	New Addition
94	KRM.GRHI-T2	11	0	0	1.2	1.2	2.4	1.01	11.2	New Addition
95	KULACHI-T1	11	1.2	0	0	1.2	2.4	1.04	11.5	New Addition
96	LACHI-T1	11	2.4	0	9.6	0	12	1.05	11.5	New Addition
97	LACHI-T2	11	0	0	6	0	6	1.02	11.2	New Addition
98	MADYAN-T1	11	0	0	0	0	0	1.03	11.3	No Change
99	MADYAN-T2	11	0	0	0	0	0	1.03	11.3	No Change
100	MAJUHI-T1	11	0	0	0	3.6	3.6	1.03	11.4	New Addition
101	MANSEHRA-T1	11	4.8	0	0	0	4.8	1.03	11.4	No Change
102	MANSEHRA-T2	11	7.2	0	0	0	7.2	1.03	11.4	No Change
103	MANSEHRA-T3	11	0	0	9.6	0	9.6	1.03	11.4	New Addition
104	MARDAN 2-T1	11	2.2	0	6.2	6	14.4	1.04	11.4	New Addition
105	MARDAN 2-T2	11	0	0	9.6	6	15.6	1.04	11.4	New Addition
106	MARDAN-T1	11	0	0	0	0	0	1.03	11.3	No Change
107	MARDAN-T2	11	0	0	3.6	0	3.6	1.02	11.2	New Addition
108	MATANI-T2	11	4.8	0	1.2	0	6	1.04	11.5	New Addition
109	MATANI-T3	11	7.2	0	0	1.2	8.4	1.04	11.5	New Addition
110	MATANI-T4	11	0	0	3.6	0	3.6	1.04	11.5	New Addition
111	MUZAFABAD-T1	11	0	0	0	8.4	8.4	1.04	11.4	New Addition
112	MUZAFABAD-T2	11	0	0	0	7.2	7.2	1.04	11.4	New Addition
113	MUZAFABAD-T4	11	0	0	4.8	0	4.8	1.05	11.5	New Addition
114	NATIAGALI-T1	11	0	0	3.6	0	3.6	1.04	11.4	New Addition
115	NAUSERY-T1	11	0	0	4.8	4.8	9.6	1.04	11.4	New Addition
116	NIZAMPUR-T1	11	2.4	0	0	0	2.4	1.04	11.5	No Change
117	NOWSHCITY-T1	11	4.8	0	0	0	4.8	1.04	11.5	No Change
118	NOWSHCITY-T3	11	4.8	0	0	0	4.8	1.04	11.5	No Change
119	NOWSHCITY-T4	11	0	0	0	0	0	1.02	11.2	No Change
120	NOWSHR I-T1	11	7.2	0	0	0	7.2	1.04	11.4	No Change
121	NOWSHR I-T2	11	4.8	0	0	0	4.8	1.04	11.4	No Change
122	NOWSHR I-T3	11	0	0	2.4	0	2.4	1.01	11.1	New Addition
123	OGHI-T1	11	0	0	2.4	0	2.4	1.02	11.2	New Addition
124	OGHI-T2	11	0	0	3.6	0	3.6	1.04	11.4	New Addition
125	PABBI-T1	11	7.2	0	0	0	7.2	1.03	11.3	No Change
126	PABBI-T2	11	7.2	0	0	0	7.2	1.03	11.3	No Change
127	PABBI-T3	11	0	0	0	0	0	1.03	11.4	No Change
128	PAROVA-T1	11	0	0	3.6	0	3.6	1.05	11.5	New Addition
129	PAROVA-T2	11	2	0	0	3.6	5.6	1.03	11.3	New Addition
130	PAROVA-T3	11	0	0	3.6	0	3.6	1.04	11.5	New Addition
131	PATTAN-T1	11	0	0	1.2	0	1.2	1.02	11.2	New Addition
132	PESH CITY-T1	11	0	0	12	0	12	1.04	11.5	New Addition
133	PESH CITY-T2	11	7.2	0	0	0	7.2	1.03	11.3	No Change
134	PESH CITY-T3	11	7.2	0	3.6	0	10.8	1.03	11.4	New Addition
135	PESH FRT-T1	11	7.2	0	0	0	7.2	1.03	11.4	No Change
136	PESH FRT-T2	11	7.2	0	0	0	7.2	1.03	11.4	No Change
137	PESH IND-T1	11	7.2	0	8.4	2.4	18	1.04	11.4	New Addition
138	PESH IND-T2	11	12	0	1.2	0	13.2	1.04	11.5	New Addition
139	PESH IND-T3	11	0	0	13.2	0	13.2	1.04	11.4	New Addition
140	PESH UNIV-T1	11	6.8	0	2.8	0	9.6	1.04	11.4	New Addition
141	PESH UNIV-T2	11	6.8	0	0.4	0	7.2	1.04	11.5	New Addition

Voltage Summary of 11 KV Bus Bars After Addition of Capacitors Obtained from OPF and Contingency										
Sr. No.	Bus Name	Base kV	Existing Capacitors	Reduction in existing capacitors	Capacitors Required till 2015 Base Case (OPF)	Capacitors Required to Meet (N-1) Contingency	Final List of Capacitors required till 2015	Voltage (pu)	Voltage (kV)	Remarks
142	PESH UNIV-T3	11	6.8	0	0.4	0	7.2	1.05	11.5	New Addition
143	PESHCANT-T1	11	0	0	7.2	1.2	8.4	1.04	11.5	New Addition
144	PESHCANT-T2	11	0	0	9.6	1.2	10.8	1.05	11.5	New Addition
145	PESHCANT-T3	11	0	0	4.8	1.2	6	1.05	11.5	New Addition
146	PESHCANT-T4	11	0	0	4.8	1.2	6	1.04	11.4	New Addition
147	PEZU-T1	11	0	0	6	0	6	1.04	11.4	New Addition
148	PEZU-T2	11	0	0	2.4	2.4	4.8	1.03	11.4	New Addition
149	PPCCHARS-T1	11	0	0	0	0	0	1.02	11.2	No Change
150	R BABA-T1	11	0	0	0	0	0	1.02	11.3	No Change
151	R BABA-T2	11	0	0	0	0	0	1.03	11.3	No Change
152	R BABA-T3	11	0	0	0	0	0	1.04	11.5	No Change
153	RAJJAR-T1	11	0	0	0	0	0	1.03	11.3	No Change
154	RAJJAR-T2	11	0	0	4.8	0	4.8	1.03	11.3	New Addition
155	S NURANG-T1	11	7.2	0	0	1.2	8.4	1.04	11.5	New Addition
156	S NURANG-T2	11	0	0	4.8	0	4.8	1.04	11.5	New Addition
157	S NURANG-T3	11	0	0	10.8	0	10.8	1.05	11.5	New Addition
158	SABIR ABD-T1	11	0	0	3.6	3.6	7.2	1.03	11.3	New Addition
159	SAKHI CH-T1	11	4.8	-1.2	0	0	3.6	1.04	11.4	Reduced
160	SAKHI CH-T2	11	4.8	0	0	0	4.8	1.04	11.4	No Change
161	SAKHI CH-T3	11	0	0	6	0	6	1.03	11.3	New Addition
162	SANGLAP-T1	11	0	0	4.8	0	4.8	1.03	11.3	New Addition
163	SHABQADAR-T3	11	4.8	0	0	0	4.8	1.03	11.3	No Change
164	SHABQADAR-T4	11	7.2	0	0	0	7.2	1.04	11.4	No Change
165	SHABQADAR-T5	11	0	0	6	0	6	1.03	11.4	New Addition
166	SHAHIBAGH-T3	11	7	0	0.2	0	7.2	1.04	11.5	New Addition
167	SHAHIBAGH-T5	11	7.2	0	0	0	7.2	1.05	11.5	No Change
168	SHAHIBAGH-T6	11	0	0	7.2	0	7.2	1.03	11.3	New Addition
169	SHAIBG N-T1	11	0	0	0	0	0	1.04	11.4	No Change
170	SHAIBG N-T2	11	0	0	0	0	0	1.04	11.4	No Change
171	SHMUHDI-T1	11	0	0	4.8	0	4.8	1.04	11.5	New Addition
172	SHMUHDI-T2	11	0	0	4.8	0	4.8	1.04	11.5	New Addition
173	SIRAJ BBA-T1	11	0	0	3.6	0	3.6	1.05	11.5	New Addition
174	SIRAJ BBA-T2	11	0	0	0	4.8	4.8	1.03	11.4	New Addition
175	SWABI-T1	11	4.8	0	12	0	16.8	1.05	11.5	New Addition
176	SWABI-T2	11	3.6	0	2.4	0	6	1.04	11.5	New Addition
177	SWABI-T3	11	0	0	7.2	0	7.2	1.05	11.5	New Addition
178	SWAT-T1	11	0	0	15.6	1.2	16.8	1.03	11.3	New Addition
179	SWAT-T2	11	0	0	12	1.2	13.2	1.03	11.3	New Addition
180	SWAT-T3	11	0	0	6	2.4	8.4	1.03	11.3	New Addition
181	SWAT-T5	11	0	0	12	3.6	15.6	1.02	11.2	New Addition
182	TAJAZAI-T1	11	4.8	0	0	2.4	7.2	1.03	11.3	New Addition
183	TAJAZAI-T1	11	1.8	0	0.6	0	2.4	1.03	11.3	New Addition
184	TAJAZAI-T2	11	4.8	-1.2	0	0	3.6	1.04	11.4	Reduced
185	TAJAZAI-T2	11	0	0	2.4	0	2.4	1.02	11.2	New Addition
186	TALL-T2	11	3.6	0	0	4.8	8.4	1.02	11.2	New Addition
187	TALL-T3	11	4.8	0	0	3.6	8.4	1.02	11.2	New Addition
188	TANGI-T1	11	4.8	0	0	0	4.8	1.03	11.3	No Change
189	TANGI-T2	11	7.2	0	0	0	7.2	1.03	11.3	No Change
190	TANGI-T3	11	0	0	4.8	0	4.8	1.03	11.4	New Addition
191	TANK-T4	11	0	0	3.6	2.4	6	1.03	11.4	New Addition
192	TANK-T6	11	0	0	7.2	0	7.2	1.03	11.4	New Addition
193	TANK-T7	11	0	0	7.2	0	7.2	1.03	11.4	New Addition
194	TARBELA N-T1	11	4.8	0	0	0	4.8	1.03	11.3	No Change
195	TARBELA N-T2	11	0	0	3.6	0	3.6	1.05	11.5	New Addition
196	TARBELA R-T1	11	4.8	0	2.4	0	7.2	1.04	11.5	New Addition
197	TARBELA R-T2	11	4.6	0	0.2	0	4.8	1.05	11.5	New Addition
198	TARBELA R-T3	11	0	0	6	0	6	1.04	11.4	New Addition
199	THAKOT-T1	11	0	0	0	0	0	1.03	11.4	No Change
200	THAKOT-T2	11	0	0	0	0	0	1.03	11.4	No Change
201	TIMERGARA-T2	11	3.6	-3.6	0	0	0	1.03	11.4	Reduced
202	TIMERGARA-T3	11	0	0	0	0	0	1.03	11.4	No Change
203	TIMERGARA-T4	11	0	0	0	0	0	1.03	11.4	No Change
204	TIMRGARH-T1	11	0	0	0	0	0	1.03	11.3	No Change
205	TIMRGARH-T2	11	2.4	0	0	0	2.4	1.03	11.3	No Change
206	WARAI-T1	11	0	0	7.2	3.6	10.8	1.03	11.4	New Addition
207	WARSAK-T1	11	0	0	0	2.4	2.4	1.04	11.5	New Addition
208	WARSAK-T2	11	0	0	2.4	0	2.4	1.04	11.5	New Addition
209	WARSAK-T3	11	0	0	6	2.4	8.4	1.05	11.5	New Addition
		Total	**440.7**	**-14.4**	**758.9**	**183.6**	**1368.8**			

Reactive Power Compensation Study of PESCO

With Additional Capacitor Banks

Peak Load : Year 2015

Exhibit No. 2015-3.1

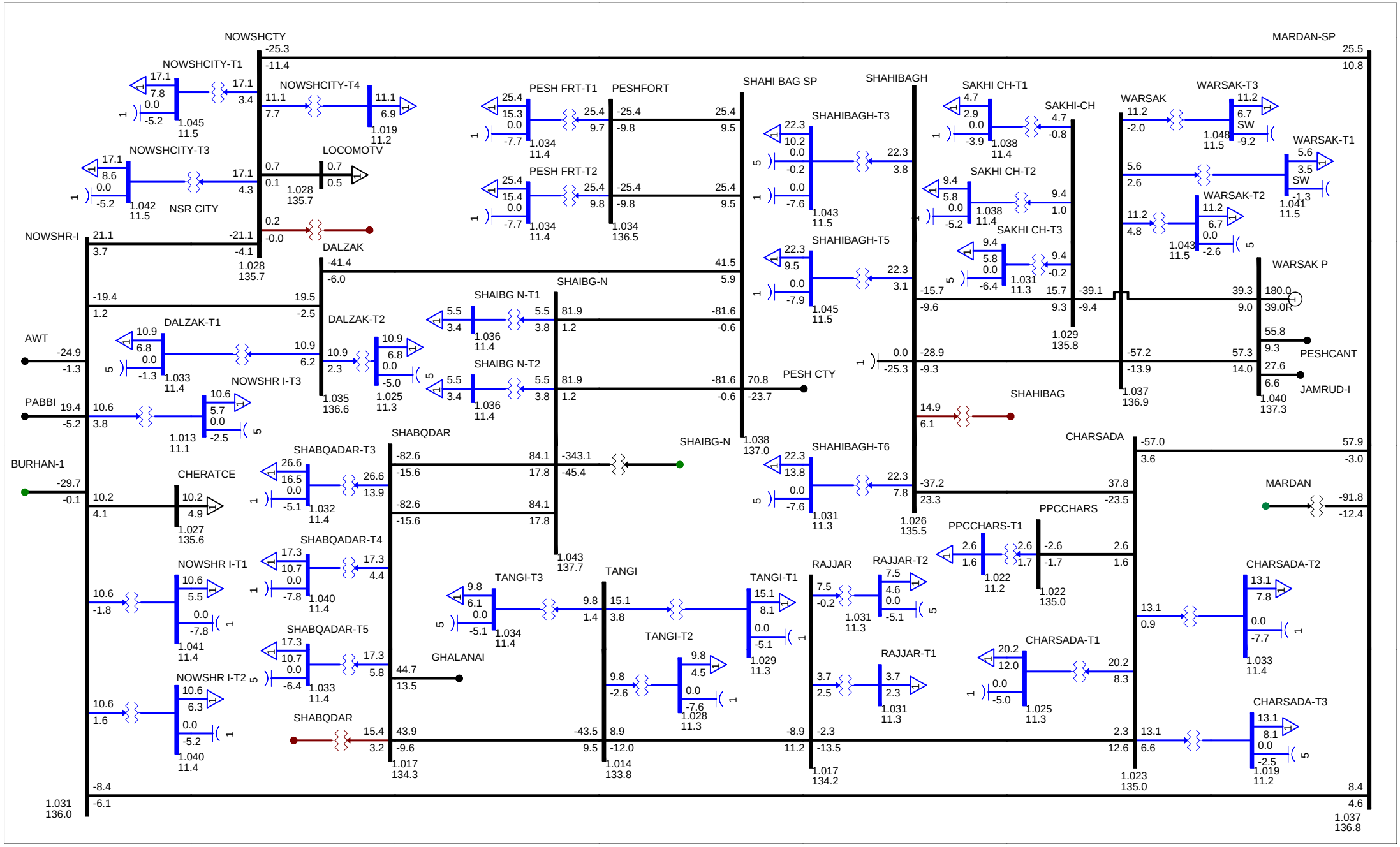

Reactive Power Compensation Study of PESCO

With Additional Capacitor Banks

Peak Load : Year 2015

Exhibit No. 2015-3.2

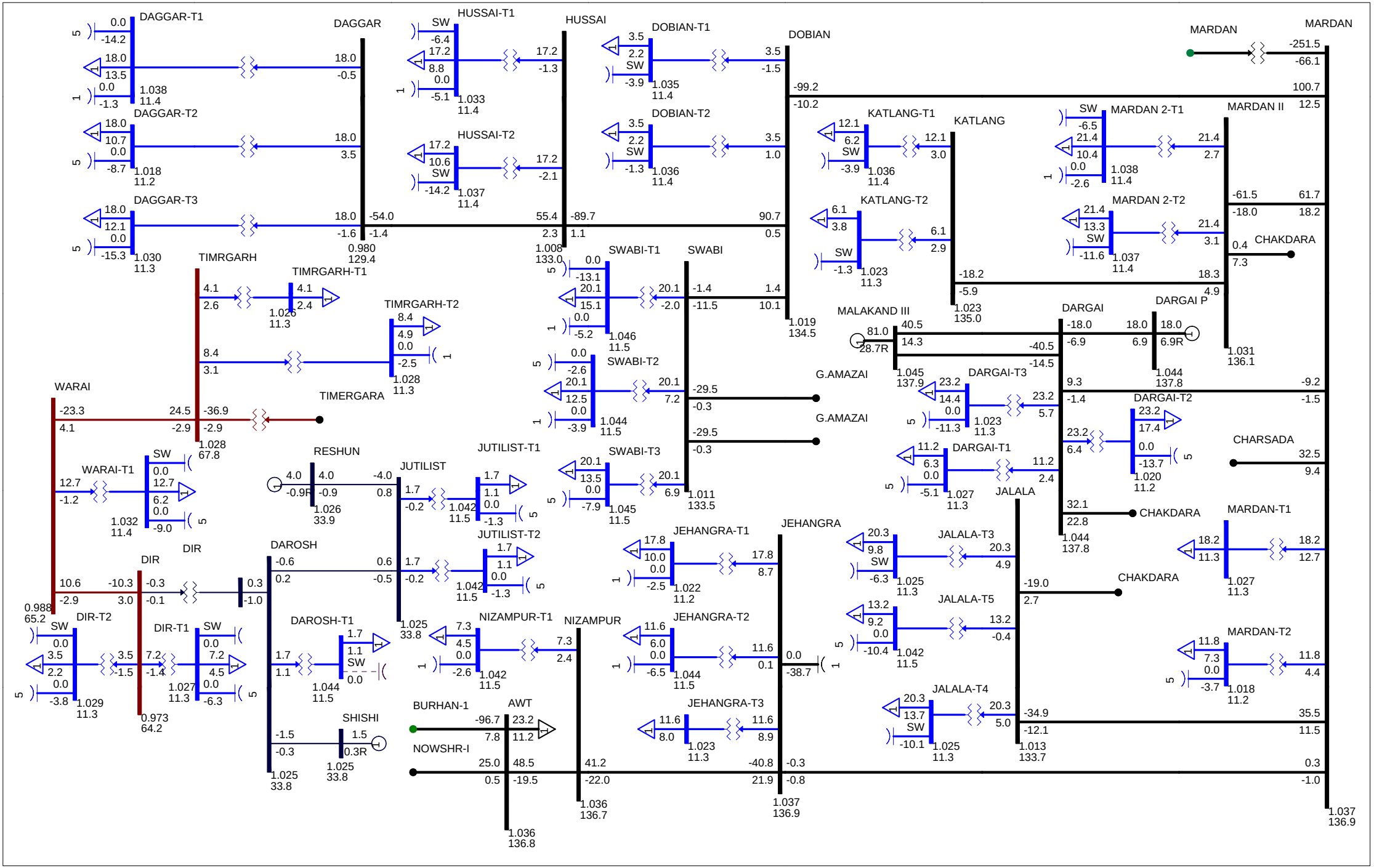

Reactive Power Compensation Study of PESCO

With Additional Capacitor Banks

Peak Load : Year 2015

Exhibit No. 2015-3.3

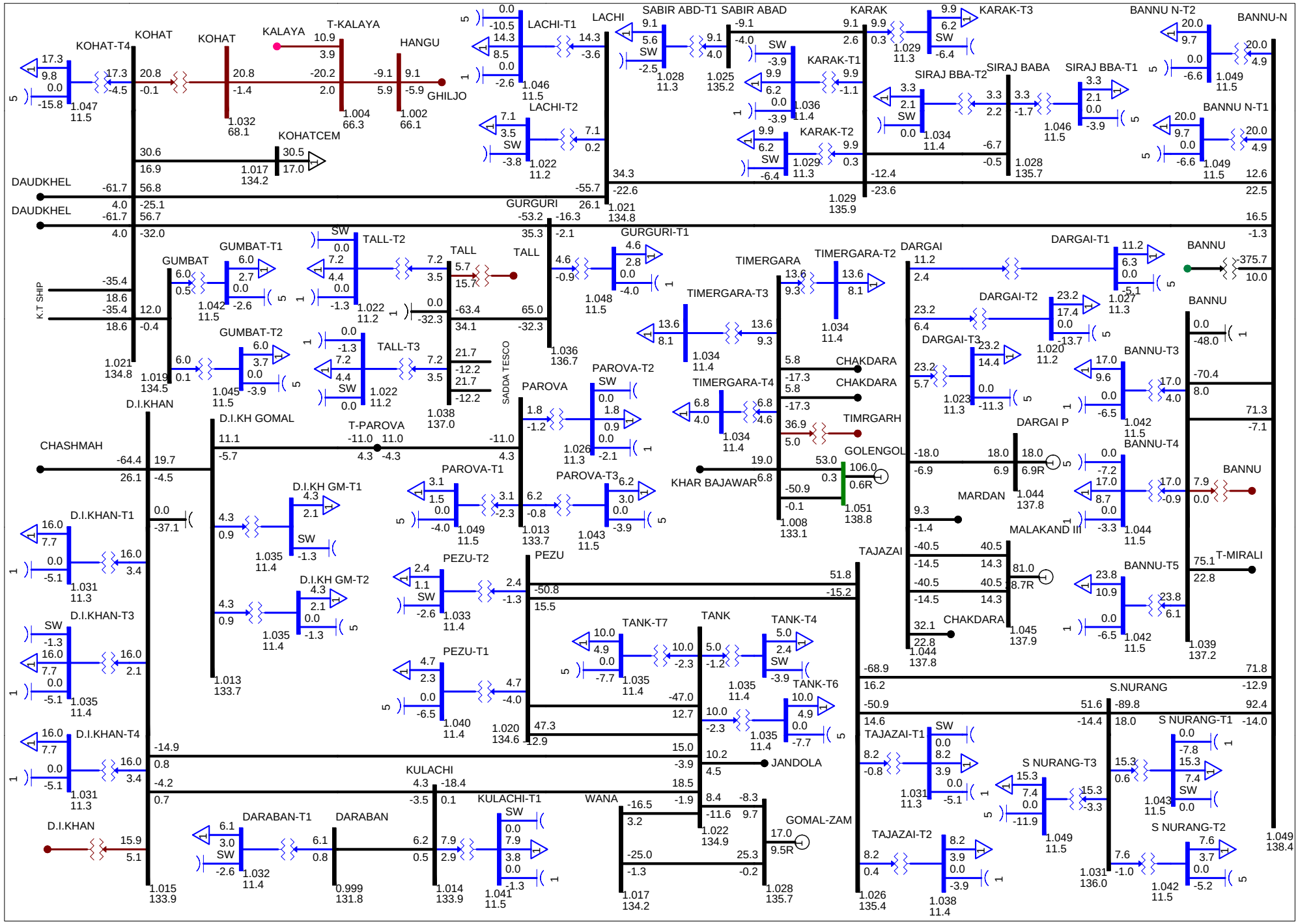

Reactive Power Compensation Study of PESCO

With Additional Capacitor Banks

Peak Load : Year 2015

Exhibit No. 2015-3.4

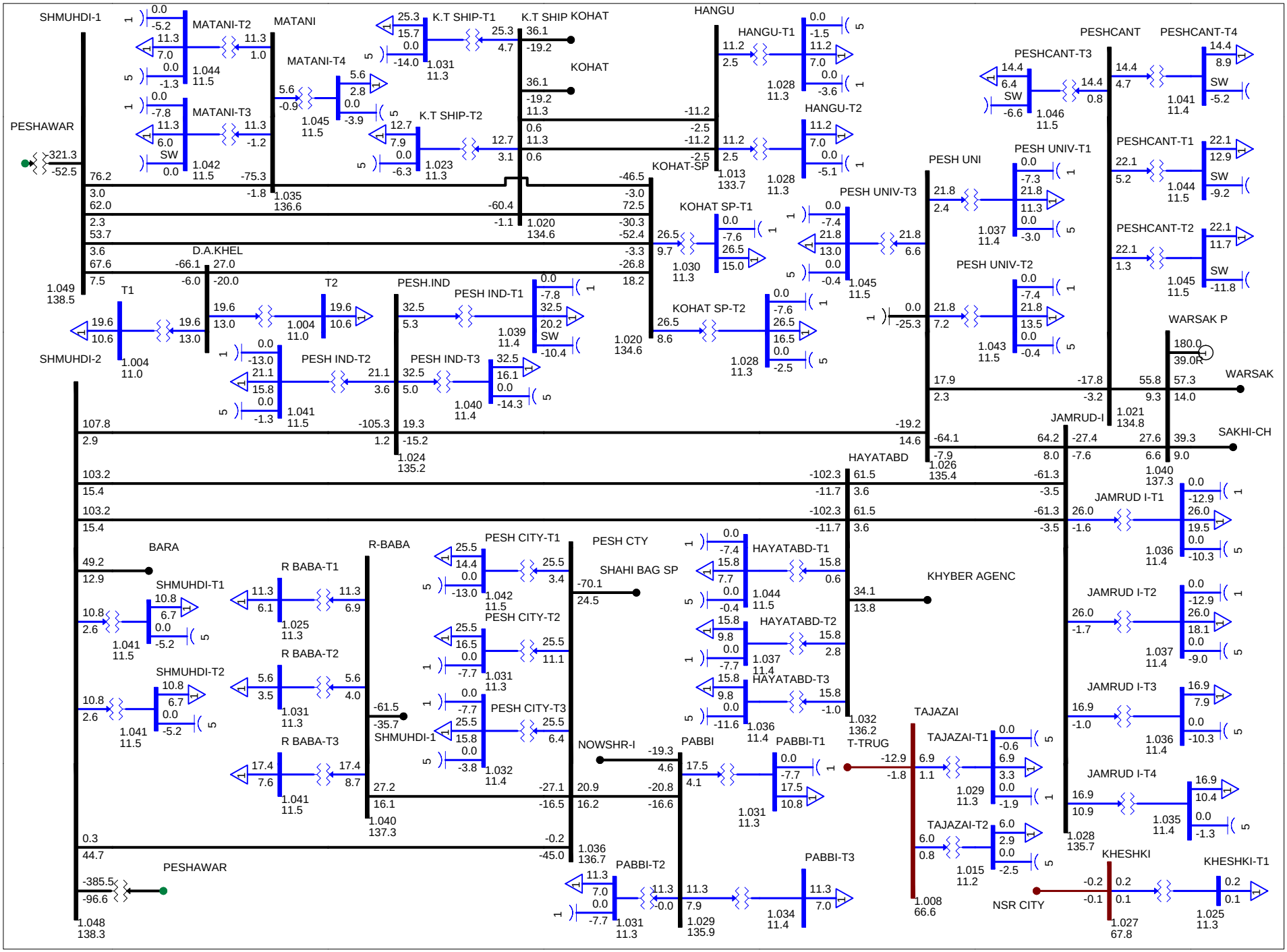

Reactive Power Compensation Study of PESCO

With Additional Capacitor Banks

Peak Load : Year 2015

Exhibit No. 2015-3.5

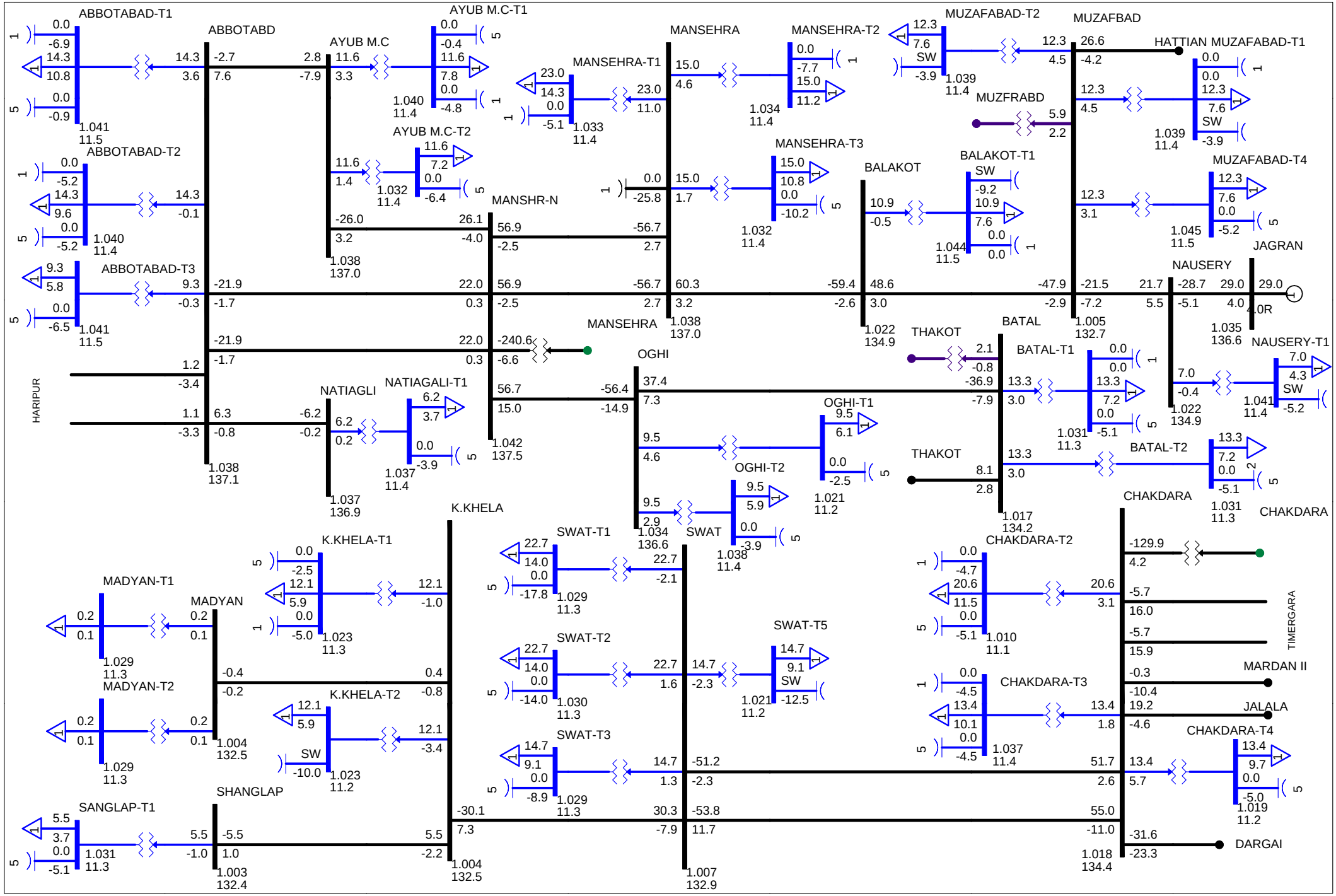

Reactive Power Compensation Study of PESCO

With Additional Capacitor Banks

Peak Load : Year 2015

Exhibit No. 2015-3.6

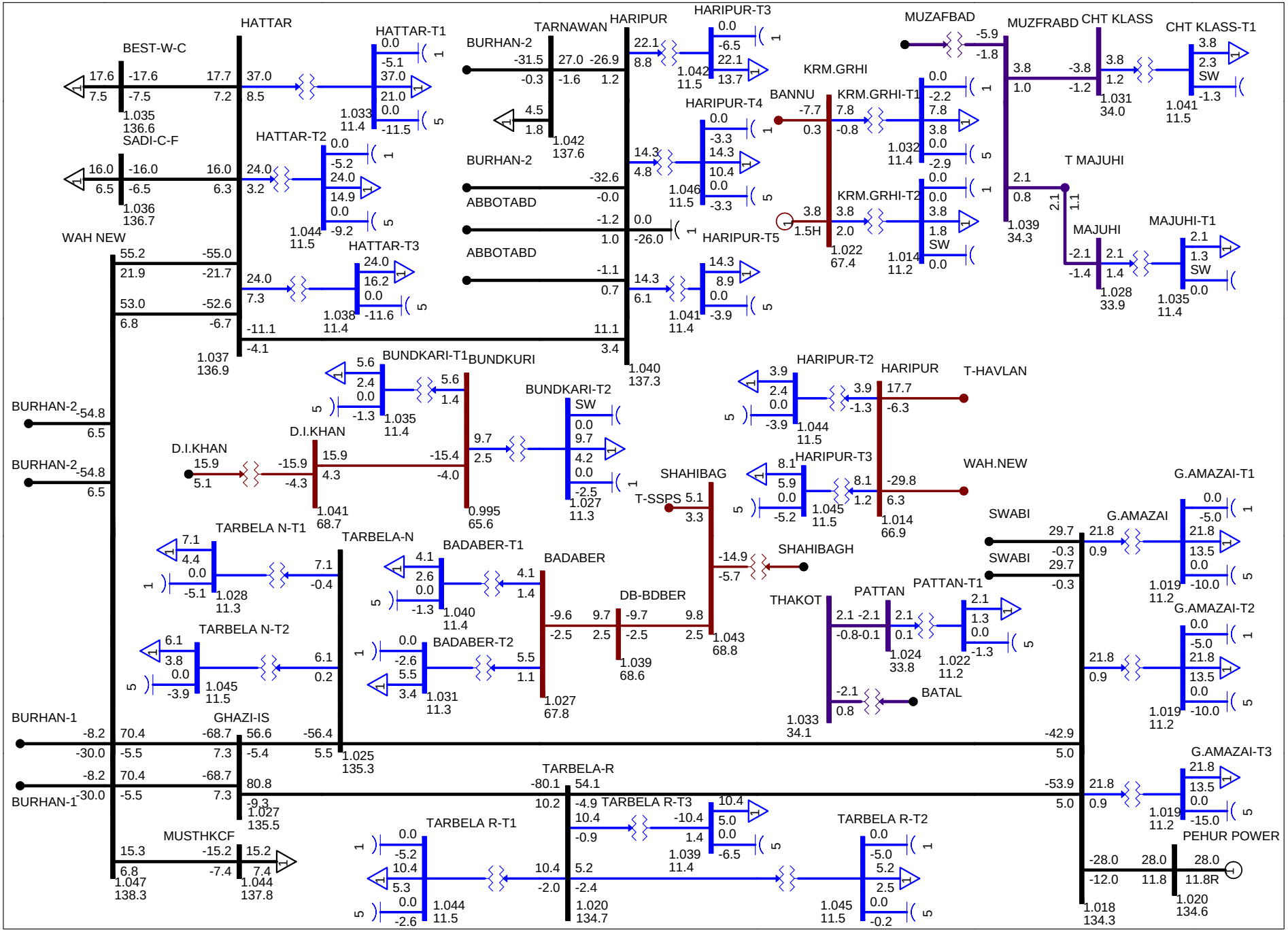

Reactive Power Compensation of Study of PESCO

Peak Load, Year 2015

Reduction in MVA Loading of Transmission Lines - Peak Load 2015 with Additional Capacitors

BUS NAME		Base kV	Ckt Id	Rated MVA	MVA Loading		Reduction in MVA Loading
From	To				Before Capacitor Addition	After Capacitor Addition	
ABBOTABD	NATIAGLI	132	1	112	7.6	6.1	1.5
ABBOTABD	AYUB M.C	132	2	112	7.7	8.1	-0.4
ABBOTABD	MANSHR-N	132	1	202	22.9	21.2	1.7
ABBOTABD	MANSHR-N	132	2	202	22.9	21.2	1.7
ABBOTABD	HARIPUR	132	1	112	4.6	3.4	1.2
ABBOTABD	HARIPUR	132	2	112	4.4	3.3	1.1
AWT	NIZAMPUR	132	1	112	58.8	50.5	8.3
AWT	NOWSHR-I	132	1	114	24	24.2	-0.2
AWT	BURHAN-1	132	2	114	101.2	93.7	7.5
AYUB M.C	MANSHR-N	132	1	112	27.5	25.4	2.1
BALAKOT	MUZAFBAD	132	1	112	52.7	47.7	5
BANNU	T-MIRALI	132	1	112	83	76	7
BANNU-N	KARAK	132	1	112	41.8	25.9	15.9
BANNU-N	BANNU	132	1	112	72.1	68.3	3.8
BANNU-N	BANNU	132	2	112	72.1	68.3	3.8
BANNU-N	S.NURANG	132	1	112	94.8	89.1	5.7
BANNU-N	TAJAZAI	132	1	112	72.8	69.6	3.2
BARA	SHMUHDI-2	132	1	112	49.7	48.7	1
BATAL	THAKOT	132	1	112	10.1	9.7	0.4
CHAKDARA	SWAT	132	1	112	76	55.1	20.9
CHAKDARA	SWAT	132	2	202	70.7	50.9	19.8
CHARSADA	RAJJAR	132	1	112	13.9	13.4	0.5
CHARSADA	PPCCHARS	132	1	112	3.2	3	0.2
CHARSADA	SHAHIBAGH	132	1	112	58.5	43.6	14.9
CHASHMAH	D.I.KHAN	132	1	112	76.4	69.9	6.5
D.A.KHEL	KOHAT-SP	132	1	114	29.8	32.9	-3.1
D.I.KH GOMAL	D.I.KHAN	132	2	112	23.6	19.9	3.7
DALZAK	SHAHI BAG SP	132	1	114	61.9	40.4	21.5
DARGAI	MALAKAND III	132	1	112	45.8	41.2	4.6
DARGAI	MALAKAND III	132	2	112	45.8	41.2	4.6
DARGAI	DARGAI P	132	2	112	22.4	18.5	3.9
DARGAI	CHAKDARA	132	1	112	36.7	38.6	-1.9
DBR-KHWR	KHANKHWR	132	1	404	52.6	52.6	0
DBR-KHWR	ALAI-KHR	132	1	404	73.3	73.3	0
DOBIAN	MARDAN	132	1	112	143.1	97.9	45.2
DOBIAN	HUSSAI	132	1	112	135.4	89	46.4
DOBIAN	SWABI	132	1	112	6.3	11.5	-5.2
G.AMAZAI	PEHUR POWER	132	1	112	35.8	29.9	5.9
G.AMAZAI	TARBELA-N	132	2	112	56	42.5	13.5
GHAZI-IS	TARBELA-N	132	1	112	70	55.4	14.6
GHAZI-IS	WAH NEW	132	1	112	85.3	67.4	17.9
GHAZI-IS	WAH NEW	132	2	112	85.3	67.4	17.9
GOMAL-ZAM	WANA	132	1	112	29.1	24.7	4.4
GURGURI	TALL	132	1	112	74.7	70.1	4.6
GURGURI	BANNU-N	132	1	112	16.3	15.9	0.4
HARIPUR	TARNAWAN	132	1	112	28.5	25.9	2.6
HARIPUR	HATTAR	132	1	112	15.7	11.4	4.3
HARIPUR	BURHAN-2	132	1	112	34.5	31.4	3.1
HATTAR	BEST-W-C	132	1	112	19.1	18.5	0.6
HATTAR	SADI-C-F	132	1	112	17.2	16.6	0.6
HATTAR	WAH NEW	132	1	112	58.3	51.1	7.2
HATTAR	WAH NEW	132	2	202	65	57	8
HATTIAN	MUZAFBAD	132	1	112	26.1	26.8	-0.7
HATTIAN	BAGH	132	1	112	21.9	18.8	3.1
HAYATABD	KHYBER AGENC	132	1	112	38.4	36.6	1.8

Reduction in MVA Loading of Transmission Lines - Peak Load 2015 with Additional Capacitors							
BUS NAME		Base kV	Ckt Id	Rated MVA	MVA Loading		Reduction in MVA Loading
From	To				Before Capacitor Addition	After Capacitor Addition	
HAYATABD	SHMUHDI-2	132	1	202	121.4	99.8	21.6
HAYATABD	SHMUHDI-2	132	2	202	121.4	99.8	21.6
HUSSAI	DAGGAR	132	1	112	90.9	55.1	35.8
JALALA	CHAKDARA	132	1	112	19.6	19.4	0.2
JAMRUD-I	HAYATABD	132	1	112	77.8	59.7	18.1
JAMRUD-I	HAYATABD	132	2	112	77.8	59.7	18.1
JAMRUD-I	LANDIKOT	132	1	184	36.1	62.9	-26.8
JAMRUD-I	PESH UNI	132	2	112	59.4	62.56	-3.16
JEHANGRA	NIZAMPUR	132	1	112	51.4	45.1	6.3
K.KHELA	MADYAN	132	1	112	0.7	0.8	-0.1
K.KHELA	SHANGLAP	132	1	112	8.4	5.9	2.5
K.T SHIP	HANGU	132	1	112	11.8	11.4	0.4
K.T SHIP	HANGU	132	2	112	11.8	11.4	0.4
KARAK	SABIR ABAD	132	1	112	12	9.7	2.3
KARAK	SIRAJ BABA	132	1	112	8.4	6.5	1.9
KHANKHWR	ALAI-KHR	132	2	404	122.5	122.5	0
KOHAT	GURGURI	132	1	112	67	63.7	3.3
KOHAT	KOHATCEM	132	1	112	35.4	34.3	1.1
KOHAT	K.T SHIP	132	1	112	39.3	40.1	-0.8
KOHAT	K.T SHIP	132	2	112	39.3	40.1	-0.8
KOHAT	GUMBAT	132	1	112	14.3	11.8	2.5
KOHAT	LACHI	132	1	112	60	60.8	-0.8
KOHAT	DAUDKHEL	132	1	114	63	60.7	2.3
KOHAT	DAUDKHEL	132	2	114	63	60.7	2.3
KOHAT-SP	K.T SHIP	132	2	114	77	77.1	-0.1
KULACHI	DARABAN	132	1	112	8.2	6.2	2
KULACHI	D.I.KHAN	132	1	112	6.2	5.4	0.8
LACHI	KARAK	132	1	112	40.2	40.2	0
MANSEHRA	BALAKOT	132	1	112	66.3	58.2	8.1
MANSHR-N	MANSEHRA	132	1	112	58.5	54.7	3.8
MANSHR-N	MANSEHRA	132	2	112	58.5	54.7	3.8
MANSHR-N	OGHI	132	1	112	66.4	56.4	10
MARDAN	MARDAN II	132	1	112	84.3	62.2	22.1
MARDAN	CHARSADA	132	2	112	42	32.9	9.1
MARDAN	JALALA	132	1	101	54.2	36.5	17.7
MARDAN	DARGAI	132	1	101	17.8	9	8.8
MARDAN	JEHANGRA	132	1	112	29.1	1	28.1
MARDAN II	KATLANG	132	1	112	23.1	18.7	4.4
MARDAN II	CHAKDARA	132	1	112	14	10.1	3.9
MARDAN-SP	CHARSADA	132	1	112	66.9	55.9	11
MARDAN-SP	NOWSHCTY	132	1	112	24.6	27	-2.4
MARDAN-SP	NOWSHR-I	132	1	112	13.7	10.1	3.6
MATANI	KOHAT-SP	132	1	112	49.7	45.7	4
NAUSERY	MUZAFBAD	132	1	112	23.7	22.5	1.2
NAUSERY	JAGRAN	132	1	112	31.6	28.5	3.1
NOWSHCTY	LOCOMOTV	132	1	112	0.9	0.8	0.1
NOWSHCTY	NOWSHR-I	132	1	112	32.8	20.9	11.9
NOWSHR-I	CHERATCE	132	1	112	11.3	11	0.3
NOWSHR-I	PABBI	132	1	114	32.7	19.5	13.2
NOWSHR-I	DALZAK	132	1	114	37.4	19	18.4
OGHI	BATAL	132	1	112	43.4	37.2	6.2
PABBI	PESH CTY	132	1	112	45.9	25.8	20.1
PESH CTY	SHAHI BAG SP	132	1	114	80.9	71.9	9
PESH CTY	R-BABA	132	1	202	53.5	30.6	22.9
PESH CTY	SHMUHDI-2	132	1	202	30.1	43.4	-13.3
PESH UNI	PESH.IND	132	1	112	32.9	23.9	9
PESH.IND	SHMUHDI-2	132	1	114	121.5	102.9	18.6
PESHCANT	PESH UNI	132	1	112	22	17.7	4.3

Reduction in MVA Loading of Transmission Lines - Peak Load 2015 with Additional Capacitors							
BUS NAME		Base kV	Ckt Id	Rated MVA	MVA Loading		Reduction in MVA Loading
From	To				Before Capacitor Addition	After Capacitor Addition	
PEZU	TAJAZAI	132	1	112	54.1	52.6	1.5
PEZU	TAJAZAI	132	2	1120	54.1	52.6	1.5
RAJJAR	TANGI	132	1	112	26.5	14.8	11.7
R-BABA	SHMUHDI-1	132	1	202	89.6	68.4	21.2
S.NURANG	TAJAZAI	132	1	112	52.5	51.9	0.6
SAKHI-CH	WARSAK P	132	1	114	45.8	39	6.8
SHABQDAR	SHAIBG-N	132	1	112	94.2	82.6	11.6
SHABQDAR	SHAIBG-N	132	2	112	94.2	82.6	11.6
SHAHI BAG SP	PESHFORT	132	1	202	26.3	26.3	0
SHAHI BAG SP	PESHFORT	132	2	202	26.3	26.3	0
SHAHIBAGH	SAKHI-CH	132	1	114	25.1	17.9	7.2
SHAHIBAGH	WARSAK	132	1	114	35.7	29.6	6.1
SHAIBG-N	SHAHI BAG SP	132	1	112	94.2	78.6	15.6
SHAIBG-N	SHAHI BAG SP	132	2	112	94.2	78.6	15.6
SHMUHDI-1	MATANI	132	3	112	77	72.8	4.2
SHMUHDI-1	D.A.KHEL	132	1	114	70.9	65	5.9
SHMUHDI-1	KOHAT-SP	132	2	114	55.4	51.5	3.9
SHMUHDI-1	K.T SHIP	132	1	114	63.7	59.2	4.5
SWABI	G.AMAZAI	132	1	112	40.6	29.1	11.5
SWABI	G.AMAZAI	132	2	112	40.6	29.1	11.5
SWAT	K.KHELA	132	1	112	38.4	31.1	7.3
TALL	SADDA TESCO	132	1	112	23.9	24	-0.1
TALL	SADDA TESCO	132	2	112	23.9	24	-0.1
TANGI	SHABQDAR	132	1	112	59.7	44.1	15.6
TANK	GOMAL-ZAM	132	2	112	11.6	14	-2.4
TANK	WANA	132	1	112	18.7	17.7	1
TANK	PEZU	132	1	202	50.2	48.1	2.1
TANK	PEZU	132	2	202	50.2	48.1	2.1
TANK	JANDOLA	132	1	112	13.4	11.7	1.7
TANK	KULACHI	132	1	112	18.9	18.2	0.7
TANK	D.I.KHAN	132	1	112	14.7	15.2	-0.5
TARBELA-R	GHAZI-IS	132	1	112	100.9	79.2	21.7
TARBELA-R	G.AMAZAI	132	1	112	73.9	53.2	20.7
TARNAWAN	BURHAN-2	132	1	112	33.2	30.2	3
TIMERGARA	CHAKDARA	132	1	112	14.6	18.2	-3.6
TIMERGARA	CHAKDARA	132	2	112	14.6	18.1	-3.5
TIMERGARA	GOLENGOL	132	1	202	58	50.5	7.5
TIMERGARA	GOLENGOL	132	2	202	58	50.5	7.5
TIMERGARA	KHAR BAJAWAR	132	1	112	23.3	20.7	2.6
T-MIRALI	MIR ALI	132	1	112	38.6	35.5	3.1
T-MIRALI	MIRANSHA	132	1	112	45.1	41.2	3.9
T-PAROVA	PAROVA	132	1	112	13.3	11.7	1.6
T-PAROVA	D.I.KH GOMAL	132	1	112	13.3	12.3	1
WAH NEW	MUSTHKCF	132	1	112	16.6	16.2	0.4
WARSAK P	WARSAK	132	1	114	68.7	56.7	12
WARSAK P	JAMRUD-I	132	1	112	36.2	27.6	8.6
WARSAK P	PESHCANT	132	1	112	66.9	54.6	12.3
BADABER	DB-BDBER	66	1	35	9.6	9.7	-0.1
BANNU	KRM.GRHI	66	1	32	8.6	7.6	1
BUNDKURI	D.I.KHAN	66	1	39	17.7	15.9	1.8
GHILJO	TALL	66	1	39	11.9	10.1	1.8
HANGU	GHILJO	66	1	39	11.9	10.8	1.1
HANGU	T-KALAYA	66	1	39	12	10.9	1.1
HARIPUR	WAH.NEW	66	1	39	58.7	30.1	28.6
HAVELIAN	T-HAVLAN	66	1	39	34.5	18.4	16.1
KALAYA	T-KALAYA	66	1	39	12.2	11.7	0.5
KHESHKI	NSR CITY	66	1	29	0.3	0.3	0
KOHAT	T-KALAYA	66	1	39	20.8	20.2	0.6

Reduction in MVA Loading of Transmission Lines - Peak Load 2015 with Additional Capacitors							
BUS NAME		Base kV	Ckt Id	Rated MVA	MVA Loading		Reduction in MVA Loading
From	To				Before Capacitor Addition	After Capacitor Addition	
SHABQDAR	GHALANI	66	1	39	15.1	15.1	0
SHAHIBAG	T-SSPS	66	1	35	6.1	6	0.1
SHAHIBAG	DB-BDBER	66	1	39	9.6	9.7	-0.1
TAJAZAI	T-TRUG	66	1	39	14.7	12.9	1.8
TALL	ALIZAI	66	1	39	10.7	10.5	0.2
T-HAVLAN	HARIPUR	66	1	39	34.5	18.5	16
TIMRGARH	WARAI	66	1	39	36.5	24	12.5
T-SSPS	SSPS	66	1	35	6.1	6	0.1
WARAI	DIR	66	1	39	17	11.1	5.9
DAROSH	JUTILIST	33	1	19	0.8	0.7	0.1
DIR	DAROSH	33	1	19	1.1	1	0.1
MUZFRABD	CHT KLASS	33	1	19	10.1	3.8	6.3
PATTAN	THAKOT	33	1	39	2.6	2.2	0.4
RESHUN	JUTILIST	33	1	39	5.7	4	1.7
SHISHI	DAROSH	33	1	39	2.2	1.5	0.7
T MAJUHI	MAJUHI	33	1	39	2.8	2.4	0.4
T MAJUHI	MUZFRABD	33	1	39	2.7	2.3	0.4
					Total Reduction		**1112.34**

Reactive Power Compensation of Study of PESCO

Peak Load, Year 2015

Reduction in MVA Loading of HV/LV Transformers (132/11 kV, 66/11 kV & 33/11 kV) - Peak Load 2015 with Additional Capacitors

Bus Name	MVA of Transformer	Percentage Loading		Percentage Reduction in Loading	Reduction in MVA Loading
		Before Capacitor Addition	After Capacitor Addition		
ABBOTABAD-T1	40	38	37	1	0.4
ABBOTABAD-T2	40	39	36	3	1.2
ABBOTABAD-T3	26	44	35	9	2.34
AYUB M.C-T1	26	47	46	1	0.26
AYUB M.C-T2	26	55	43	12	3.12
BADABER-T1	7.5	66	57	9	0.675
BADABER-T2	10	71	56	15	1.5
BALAKOT-T1	13	112	82	30	3.9
BANNU N-T1	26	90	75	15	3.9
BANNU N-T2	26	90	75	15	3.9
BANNU-T4	40	46	43	3	1.2
BATAL-T1	26	61	52	9	2.34
BATAL-T2	26	61	52	9	2.34
BUNDKARI-T1	7.5	84	78	6	0.45
BUNDKARI-T2	13	78	77	1	0.13
CHAKDARA-T2	40	57	52	5	2
CHAKDARA-T3	26	60	52	8	2.08
CHAKDARA-T4	26	68	55	13	3.38
CHARSADA-T1	40	57	55	2	0.8
CHARSADA-T3	26	62	55	7	1.82
CHT KLASS-T1	4	252	99	153	6.12
D.I.KH GM-T1	26	21	17	4	1.04
D.I.KH GM-T2	26	18	17	1	0.26
D.I.KHAN-T3	40	41	40	1	0.4
DAGGAR-T1	26	120	70	50	13
DAGGAR-T2	26	88	72	16	4.16
DAGGAR-T3	26	92	71	21	5.46
DALZAK-T1	26	51	47	4	1.04
DALZAK-T2	26	51	41	10	2.6
DARABAN-T1	13	63	48	15	1.95
DARGAI-T1	13	108	84	24	3.12
DARGAI-T2	26	127	89	38	9.88
DARGAI-T3	26	117	88	29	7.54
DAROSH-T1	4	63	51	12	0.48
DIR-T1	13	70	58	12	1.56
DIR-T2	6.3	68	62	6	0.378
DOBIAN-T1	13	36	30	6	0.78
DOBIAN-T2	13	36	28	8	1.04
G.AMAZAI-T1	26	98	84	14	3.64
G.AMAZAI-T2	26	99	84	15	3.9
G.AMAZAI-T3	26	109	82	27	7.02
GUMBAT-T1	13	52	45	7	0.91

Reduction in MVA Loading of HV/LV Transformers (132/11 kV, 66/11 kV & 33/11 kV) - Peak Load 2015 with Additional Capacitors					
Bus Name	MVA of Transformer	Percentage Loading		Percentage Reduction in Loading	Reduction in MVA Loading
		Before Capacitor Addition	After Capacitor Addition		
GUMBAT-T2	13	56	45	11	1.43
GURGURI-T1	6.3	85	75	10	0.63
HANGU-T1	26	46	44	2	0.52
HANGU-T2	26	45	44	1	0.26
HARIPUR-T2	6.3	79	65	14	0.882
HARIPUR-T3	13	87	62	25	3.25
HARIPUR-T4	26	65	58	7	1.82
HARIPUR-T5	26	68	58	10	2.6
HATTAR-T1	40	108	95	13	5.2
HATTAR-T2	26	108	93	15	3.9
HATTAR-T3	26	123	93	30	7.8
HATTIAN-T1	13	75	64	11	1.43
HAVELIAN-T2	6.3	93	91	2	0.126
HAYATABD-T3	40	48	38	10	4
HUSSAI-T1	26	82	67	15	3.9
HUSSAI-T2	26	97	67	30	7.8
JALALA-T3	40	65	52	13	5.2
JALALA-T4	40	71	52	19	7.6
JALALA-T5	26	66	50	16	4.16
JAMRUD I-T1	40	71	66	5	2
JAMRUD I-T2	40	69	66	3	1.2
JAMRUD I-T3	26	75	63	12	3.12
JAMRUD I-T4	26	81	75	6	1.56
JUTILIST-T1	4	63	43	20	0.8
JUTILIST-T2	4	63	43	20	0.8
K.KHELA-T1	26	48	47	1	0.26
K.KHELA-T2	26	63	49	14	3.64
K.T SHIP-T1	26	126	97	29	7.54
K.T SHIP-T2	13	126	98	28	3.64
KARAK-T1	26	40	39	1	0.26
KARAK-T2	26	48	38	10	2.6
KARAK-T3	26	48	38	10	2.6
KATLANG-T1	26	58	48	10	2.6
KATLANG-T2	13	61	52	9	1.17
KOHAT SP-T2	40	73	70	3	1.2
KOHAT-T4	26	81	67	14	3.64
KRM.GRHI-T1	13	63	61	2	0.26
KRM.GRHI-T2	6.3	68	66	2	0.126
KULACHI-T1	26	33	32	1	0.26
LACHI-T1	26	62	58	4	1.04
LACHI-T2	13	65	55	10	1.3
MAJUHI-T1	4	70	63	7	0.28
MANSEHRA-T2	26	61	60	1	0.26
MANSEHRA-T3	26	76	56	20	5.2
MARDAN 2-T1	40	63	54	9	3.6

Reduction in MVA Loading of HV/LV Transformers (132/11 kV, 66/11 kV & 33/11 kV) - Peak Load 2015 with Additional Capacitors					
Bus Name	MVA of Transformer	Percentage Loading		Percentage Reduction in Loading	Reduction in MVA Loading
		Before Capacitor Addition	After Capacitor Addition		
MARDAN 2-T2	40	70	54	16	6.4
MARDAN-T2	26	56	47	9	2.34
MATANI-T2	26	45	44	1	0.26
MATANI-T4	13	50	42	8	1.04
MUZAFABAD-T1	26	58	50	8	2.08
MUZAFABAD-T2	26	61	50	11	2.86
MUZAFABAD-T4	26	58	49	9	2.34
NATIAGALI-T1	13	58	46	12	1.56
NAUSERY-T1	13	69	54	15	1.95
NIZAMPUR-T1	13	60	59	1	0.13
NOWSHR I-T3	26	48	42	6	1.56
OGHI-T1	13	93	79	14	1.82
OGHI-T2	13	92	74	18	2.34
PAROVA-T3	26	27	24	3	0.78
PATTAN-T1	4	64	51	13	0.52
PESH CITY-T1	40	77	62	15	6
PESH CITY-T3	40	69	66	3	1.2
PESH IND-T1	40	93	82	11	4.4
PESH IND-T2	26	85	82	3	0.78
PESH IND-T3	40	96	80	16	6.4
PESH UNIV-T1	40	57	55	2	0.8
PESH UNIV-T2	40	58	57	1	0.4
PESH UNIV-T3	40	58	57	1	0.4
PESHCANT-T1	40	69	57	12	4.8
PESHCANT-T2	40	67	55	12	4.8
PESHCANT-T3	26	64	55	9	2.34
PESHCANT-T4	26	70	58	12	3.12
PEZU-T2	13	22	21	1	0.13
RAJJAR-T2	26	35	28	7	1.82
S NURANG-T2	13	69	58	11	1.43
S NURANG-T3	26	69	58	11	2.86
SABIR ABD-T1	13	92	77	15	1.95
SAKHI CH-T1	13	40	37	3	0.39
SAKHI CH-T3	26	44	35	9	2.34
SANGLAP-T1	7.6	94	74	20	1.52
SHABQADAR-T5	26	83	69	14	3.64
SHAHIBAGH-T5	40	57	56	1	0.4
SHAHIBAGH-T6	40	69	58	11	4.4
SHMUHDI-T1	13	106	82	24	3.12
SHMUHDI-T2	13	106	82	24	3.12
SIRAJ BBA-T1	13	31	28	3	0.39
SIRAJ BBA-T2	13	32	31	1	0.13
SWABI-T1	40	66	51	15	6
SWABI-T2	40	63	53	10	4
SWABI-T3	40	64	53	11	4.4

Reduction in MVA Loading of HV/LV Transformers (132/11 kV, 66/11 kV & 33/11 kV) - Peak Load 2015 with Additional Capacitors					
Bus Name	**MVA of Transformer**	**Percentage Loading**		**Percentage Reduction in Loading**	**Reduction in MVA Loading**
		Before Capacitor Addition	**After Capacitor Addition**		
SWAT-T1	40	72	56	16	6.4
SWAT-T2	40	71	56	15	6
SWAT-T3	26	71	56	15	3.9
SWAT-T5	26	82	58	24	6.24
TAJAZAI-T1	15	48	47	1	0.15
TAJAZAI-T2	13	53	46	7	0.91
TANGI-T3	26	46	38	8	2.08
TANK-T4	13	49	40	9	1.17
TANK-T6	26	44	39	5	1.3
TANK-T7	26	44	39	5	1.3
TARBELA N-T2	13	58	46	12	1.56
TARBELA R-T3	26	46	39	7	1.82
TIMRGARH-T2	13	71	69	2	0.26
WARAI-T1	13	121	100	21	2.73
WARSAK-T1	13	53	48	5	0.65
WARSAK-T2	26	52	45	7	1.82
WARSAK-T3	26	52	44	8	2.08
			Total Reduction		**373.31**

Appendix D

Additional Capacitor Banks Required Till 2018

D-I: Voltage Summary of Bus Bars - Peak Load 2018 with Additional Capacitors

D-2: Load Flow Plots Peak Load -2018 with Additional Capacitors

Reactive Power Compensation Study of PESCO

Peak Load, Year 2018

Voltage Summary of 132,66 and 33 KV Bus Bars After Addition of Capacitors Obtained from OPF

Sr. No.	Bus Name	Base kV	Capacitor Demand till 2015	Additional Capacitors Required till 2018	Final List of Capacitors till 2018	Voltage (pu)	Voltage (kV)
1	ABBOTABD	132	0	0	0	1.03	135.3
2	ALAI-KHR	132	0	0	0	1.02	134.6
3	AWT	132	0	0	0	1.03	135.6
4	AYUB M.C	132	0	0	0	1.03	135.3
5	BALAKOT	132	0	0	0	1.03	136.5
6	BANNU	132	44.4	0	44.4	1.02	134.3
7	BANNU-II	132	0	0	0	1.01	133.3
8	BANNU-N	132	0	0	0	1.03	136.1
9	BARIKOT	132	0	0	0	1.01	132.9
10	BATAL	132	0	0	0	1.00	132.5
11	BATKHELA	132	0	0	0	1.02	135.0
12	BEST-W-C	132	0	0	0	1.01	133.5
13	CHAKDARA	132	0	0	0	1.02	134.3
14	CHARSADA	132	0	0	0	1.02	134.3
15	CHERATCE	132	0	0	0	1.03	136.0
16	CHIRAT IND	132	0	0	0	1.01	133.6
17	CHOTA LAHOR	132	0	0	0	1.02	134.3
18	D.I.KH GOMAL	132	0	0	0	1.04	137.1
19	D.I.KHAN	132	36	0	36	1.03	136.5
20	D.I.KHAN-II	132	0	0	0	1.04	137.1
21	DAGGAR	132	0	0	0	0.98	129.1
22	DALZAK	132	0	0	0	1.02	134.0
23	DARABAN	132	0	0	0	0.99	131.2
24	DARGAI	132	0	0	0	1.03	135.9
25	DARGAI P	132	0	0	0	1.03	135.9
26	DBR-KHWR	132	0	0	0	1.04	137.7
27	DI.KHN-N	132	0	0	0	1.05	138.1
28	DOBIAN	132	0	0	0	1.02	134.3
29	G.AMAZAI	132	0	0	0	1.01	133.2
30	GHAZI-IS	132	0	0	0	1.01	133.9
31	GOLENGOL	132	0	0	0	1.05	138.8
32	GOMAL-ZAM	132	0	0	0	1.03	135.6
33	GUMBAT	132	0	0	0	1.03	135.6
34	GURGURI	132	0	0	0	1.03	135.6
35	HANGU	132	0	0	0	1.00	132.4
36	HARIPUR	132	24	0	24	1.01	133.9
37	HASAN ZAI	132	0	0	0	1.00	131.7
38	HATTAR	132	0	0	0	1.01	133.8
39	HATTIAN	132	0	0	0	1.02	134.4
40	HAVELIAN	132	0	0	0	1.02	134.9
41	HAYATABD	132	0	0	0	1.03	136.4
42	HUSSAI	132	0	0	0	1.01	132.9
43	JAGRAN	132	0	0	0	1.05	138.1
44	JALALA	132	0	0	0	1.01	133.6
45	JAMRUD-I	132	0	0	0	1.04	136.8
46	JEHANGRA	132	36	0	36	1.03	135.8
47	K.KHELA	132	0	0	0	1.00	132.1
48	K.T SHIP	132	0	0	0	1.01	133.2
49	KAKASAIB	132	0	0	0	1.03	135.7
50	KARAK	132	0	0	0	1.01	133.9
51	KATLANG	132	0	0	0	1.02	134.6
52	KHANKHWR	132	0	0	0	1.03	136.0

Voltage Summary of 132,66 and 33 KV Bus Bars After Addition of Capacitors Obtained from OPF							
Sr. No.	Bus Name	Base kV	Capacitor Demand till 2015	Additional Capacitors Required till 2018	Final List of Capacitors till 2018	Voltage (pu)	Voltage (kV)
53	KOHAT	132	0	0	0	1.03	136.1
54	KOHATCEM	132	0	0	0	1.03	135.5
55	KOHAT-SP	132	0	0	0	1.01	133.0
56	KULACHI	132	0	0	0	1.02	135.0
57	KURMTNGI	132	0	0	0	1.05	138.6
58	KYALKHWR	132	0	0	0	1.05	138.1
59	LACHI	132	0	0	0	1.02	134.9
60	LOCOMOTV	132	0	0	0	1.03	135.8
61	MADYAN	132	0	0	0	1.00	132.1
62	MALAKAND III	132	0	0	0	1.03	136.0
63	MANSEHRA	132	24	0	24	1.03	136.2
64	MANSHR-N	132	0	0	0	1.03	136.5
65	MARDAN	132	0	0	0	1.04	136.7
66	MARDAN II	132	0	0	0	1.03	135.9
67	MARDAN III	132	0	0	0	1.03	135.7
68	MARDAN-SP	132	0	0	0	1.04	136.8
69	MATANI	132	0	0	0	1.02	134.2
70	MUSTHKCF	132	0	0	0	1.02	135.2
71	MUZAFBAD	132	0	0	0	1.02	133.9
72	NAGUMAN	132	0	0	0	1.03	135.5
73	NATIAGLI	132	0	0	0	1.02	135.2
74	NAUSERY	132	0	0	0	1.03	136.0
75	NIZAMPUR	132	0	0	0	1.03	135.6
76	NOWSHCTY	132	0	0	0	1.03	135.8
77	NOWSHR-I	132	0	0	0	1.03	136.5
78	NOWSHR-N	132	0	0	0	1.04	136.9
79	OGHI	132	0	0	0	1.03	135.3
80	PABBI	132	0	0	0	1.01	133.7
81	PAROVA	132	0	0	0	1.03	135.9
82	PATRIND	132	0	0	0	1.05	138.6
83	PEHUR POWER	132	0	0	0	1.01	133.5
84	PESCO COLONY	132	0	0	0	1.02	134.1
85	PESH CTY	132	0	0	0	1.02	134.5
86	PESH UNI	132	24	0	24	1.03	136.4
87	PESH.IND	132	0	0	0	1.02	134.7
88	PESHCANT	132	0	0	0	1.02	135.0
89	PESHFORT	132	0	0	0	1.01	134.0
90	PEZU	132	0	0	0	1.03	136.5
91	PPCCHARS	132	0	0	0	1.02	134.2
92	RAJJAR	132	0	0	0	1.01	132.9
93	R-BABA	132	0	0	0	1.02	134.7
94	RIDI- BEHRAM	132	0	0	0	1.04	136.7
95	S.NURANG	132	0	0	0	1.02	134.9
96	SABIR ABAD	132	0	0	0	1.01	133.2
97	SADI-C-F	132	0	0	0	1.01	133.6
98	SAKHI-CH	132	0	0	0	1.03	136.2
99	SHABQDAR	132	0	0	0	1.00	131.7
100	SHAHI BAG SP	132	0	0	0	1.02	134.3
101	SHAHIBAGH	132	24	0	24	1.03	135.4
102	SHAIBG-N	132	0	0	0	1.02	134.7
103	SHANGLAP	132	0	0	0	1.00	132.0
104	SHMUHDI-1	132	0	0	0	1.03	135.4
105	SHMUHDI-2	132	0	0	0	1.03	136.2
106	SIRAJ BABA	132	0	0	0	1.01	133.8
107	SWABI	132	0	0	0	1.01	133.2
108	SWAT	132	0	0	0	1.00	132.6
109	TAJAZAI	132	0	0	0	1.03	135.6

Voltage Summary of 132,66 and 33 KV Bus Bars After Addition of Capacitors Obtained from OPF							
Sr. No.	**Bus Name**	**Base kV**	**Capacitor Demand till 2015**	**Additional Capacitors Required till 2018**	**Final List of Capacitors till 2018**	**Voltage (pu)**	**Voltage (kV)**
110	TALL	132	30	0	30	1.03	135.6
111	TANGI	132	0	0	0	1.00	131.8
112	TANK	132	0	0	0	1.03	135.8
113	TARBELA-N	132	0	0	0	1.01	133.7
114	TARBELA-R	132	0	0	0	1.01	133.3
115	TARNAWAN	132	0	0	0	1.01	133.8
116	TARU JABA	132	0	0	0	1.01	133.8
117	THAKOT	132	0	0	0	0.99	130.8
118	TIMERGARA	132	0	0	0	1.00	132.6
119	WARSAK	132	0	0	0	1.05	138.1
120	WARSAK P	132	0	0	0	1.05	138.6
121	WARSAK ROAD	132	0	0	0	1.02	135.0
122	BADABER	66	0	0	0	1.02	67.5
123	BANNU	66	0	0	0	1.04	68.6
124	BUNDKURI	66	0	0	0	0.99	65.0
125	D.I.KHAN	66	0	0	0	1.04	68.4
126	DB-BDBER	66	0	0	0	1.04	68.4
127	DIR	66	0	0	0	0.98	64.7
128	HANGU	66	0	0	0	0.99	65.7
129	HARIPUR	66	0	0	0	0.99	65.6
130	KHESHKI	66	0	0	0	1.03	67.9
131	KOHAT	66	0	0	0	1.03	68.2
132	KRM.GRHI	66	0	0	0	1.01	66.9
133	NSR CITY	66	0	0	0	1.03	67.9
134	SHABQDAR	66	0	0	0	1.00	65.9
135	SHAHIBAG	66	0	0	0	1.04	68.7
136	TAJAZAI	66	0	0	0	1.01	66.7
137	TALL	66	0	0	0	1.01	66.6
138	TIMRGARH	66	0	0	0	1.04	68.9
139	WARAI	66	0	0	0	1.00	65.8
140	CHT KLASS	33	0	0	0	1.03	33.6
141	DAROSH	33	0	0	0	1.03	34.0
142	DIR	33	0	0	0	1.04	34.2
143	JUTILIST	33	0	0	0	1.03	34.0
144	MAJUHI	33	0	0	0	1.02	33.4
145	MUZFRABD	33	0	0	0	1.04	34.0
146	PATTAN	33	0	0	0	1.01	33.2
147	RESHUN	33	0	0	0	1.03	34.0
148	SHISHI	33	0	0	0	1.03	34.0
149	THAKOT	33	0	0	0	1.02	33.7
		Total	**242.4**	**0**	**242.4**		

Reactive Power Compensation Study of PESCO

Peak Load, Year 2018

Voltage Summary of 11 KV Bus Bars After Addition of Capacitors Obtained from OPF

Sr. No.	Bus Name	Base kV	Capacitor Demand till 2015	Additional Capacitors Required till 2018	Final List of Capacitors till 2018	Voltage (pu)	Voltage (kV)
1	ABBOTABAD-T1	11	7.2	0	7.2	1.02	11.2
2	ABBOTABAD-T2	11	9.6	0	9.6	1.02	11.2
3	ABBOTABAD-T3	11	6	0	6	1.02	11.2
4	AYUB M.C-T1	11	4.8	0	4.8	1.02	11.3
5	AYUB M.C-T2	11	6	0	6	1.02	11.2
6	BADABER-T1	11	1.2	0	1.2	1.03	11.4
7	BADABER-T2	11	2.4	0	2.4	1.03	11.3
8	BALAKOT-T1	11	10.8	0	10.8	1.01	11.1
9	BANNU 2 T1	11	0	6	6	1.02	11.2
10	BANNU 2 T2	11	0	6	6	1.02	11.2
11	BANNU-T3	11	6	3.6	9.6	1.02	11.2
12	BANNU-T4	11	9.6	2.4	12	1.02	11.2
13	BANNU-T5	11	6	0	6	1.02	11.2
14	BANNU N-T1	11	6	0	6	1.02	11.2
15	BANNU N-T2	11	6	0	6	1.02	11.2
16	BARIKOT-T1	11	0	1.2	1.2	1.01	11.1
17	BARIKOT-T2	11	0	1.2	1.2	1.01	11.1
18	BATAL-T1	11	4.8	4.8	9.6	1.03	11.4
19	BATAL-T2	11	4.8	0	4.8	1.01	11.1
20	BATKHELA T-1	11	0	0	0	1.03	11.3
21	BATKHELA T-2	11	0	0	0	1.03	11.3
22	BUNDKARI-T1	11	1.2	2.4	3.6	1.02	11.2
23	BUNDKARI-T2	11	6	4.8	10.8	1.02	11.2
24	CHAKDARA-T2	11	9.6	0	9.6	1.02	11.2
25	CHAKDARA-T3	11	8.4	0	8.4	1.03	11.3
26	CHAKDARA-T4	11	4.8	0	4.8	1.01	11.2
27	CHARSADA-T1	11	4.8	1.2	6	1.02	11.2
28	CHARSADA-T2	11	7.2	0	7.2	1.02	11.2
29	CHARSADA-T3	11	2.4	2.4	4.8	1.02	11.2
30	CHIRAT-INDT1	11	0	0	0	1.04	11.4
31	CHOTA LHRT-1	11	0	0	0	1.04	11.5
32	CHOTA LHRT-2	11	0	0	0	1.04	11.5
33	CHT KLASS-T1	11	4.8	0	4.8	1.03	11.1
34	D.I.KH GM-T1	11	3.6	0	3.6	1.04	11.4
35	D.I.KH GM-T2	11	1.2	0	1.2	1.04	11.4
36	D.I.KHAN 2T1	11	0	0	0	1.02	11.2
37	D.I.KHAN 2T2	11	0	0	0	1.02	11.2
38	D.I.KHAN-T1	11	4.8	3.6	8.4	1.03	11.3
39	D.I.KHAN-T3	11	8.4	0	8.4	1.03	11.3
40	D.I.KHAN-T4	11	4.8	0	4.8	1.03	11.3
41	DAGGAR-T1	11	14.4	4.8	19.2	1.03	11.4
42	DAGGAR-T2	11	8.4	8.4	16.8	1.03	11.3
43	DAGGAR-T3	11	14.4	0	14.4	1.04	11.4
44	DALZAK-T1	11	1.2	0	1.2	1.02	11.2
45	DALZAK-T2	11	4.8	0	4.8	1.01	11.1
46	DALZAK T-3	11	0	6	6	1.02	11.2
47	DARABAN-T1	11	6	2.4	8.4	1.01	11.1
48	DARGAI-T1	11	4.8	0	4.8	1.01	11.1
49	DARGAI-T2	11	13.2	0	13.2	1.02	11.3
50	DARGAI-T3	11	10.8	8.4	19.2	1.03	11.3
51	DAROSH-T1	11	0	0	0	1.05	11.5
52	DIR-T1	11	8.4	2.4	10.8	1.04	11.4

Voltage Summary of 11 KV Bus Bars After Addition of Capacitors Obtained from OPF							
Sr. No.	Bus Name	Base kV	Capacitor Demand till 2015	Additional Capacitors Required till 2018	Final List of Capacitors till 2018	Voltage (pu)	Voltage (kV)
53	DIR-T2	11	6	2.4	8.4	1.03	11.4
54	DOBIAN-T1	11	18	0	18	1.03	11.3
55	DOBIAN-T2	11	6	0	6	1.03	11.4
56	G.AMAZAI-T1	11	14.4	4.8	19.2	1.04	11.4
57	G.AMAZAI-T2	11	14.4	2.4	16.8	1.03	11.3
58	G.AMAZAI-T3	11	14.4	0	14.4	1.03	11.3
59	G.AMAZAI T-4	11	0	2.4	2.4	1.02	11.2
60	GUMBAT-T1	11	2.4	0	2.4	1.05	11.5
61	GUMBAT-T2	11	3.6	0	3.6	1.04	11.4
62	GURGURI-T1	11	3.6	0	3.6	1.04	11.4
63	HANGU-T1	11	4.8	1.2	6	1.02	11.2
64	HANGU-T2	11	4.8	1.2	6	1.02	11.2
65	HARIPUR-T3	11	6	1.2	7.2	1.01	11.1
66	HARIPUR-T4	11	6	0	6	1.01	11.1
67	HARIPUR-T5	11	3.6	3.6	7.2	1.02	11.3
68	HARIPUR-T2	11	3.6	0	3.6	1.02	11.2
69	HARIPUR-T3	11	4.8	0	4.8	1.02	11.2
70	HASAN ZAIT-1	11	0	2.4	2.4	1.03	11.4
71	HASAN ZAIT-2	11	0	3.6	3.6	1.03	11.4
72	HATTAR-T1	11	15.6	0	15.6	1.01	11.1
73	HATTAR-T2	11	13.2	0	13.2	1.02	11.2
74	HATTAR-T3	11	10.8	0	10.8	1.02	11.2
75	HATTAR T-4	11	0	6	6	1.02	11.2
76	HATTIAN-T1	11	9.6	0	9.6	1.01	11.1
77	HAVELIAN-T1	11	12	0	12	1.02	11.3
78	HAVELIAN-T2	11	4.8	0	4.8	1.03	11.3
79	HAYATABD-T1	11	7.2	0	7.2	1.04	11.4
80	HAYATABD-T2	11	7.2	0	7.2	1.05	11.5
81	HAYATABD-T3	11	10.8	0	10.8	1.03	11.3
82	HUSSAI-T1	11	15.6	0	15.6	1.03	11.4
83	HUSSAI-T2	11	18	0	18	1.03	11.3
84	HUSSAI T-3	11	0	14.4	14.4	1.04	11.4
85	JALALA-T3	11	10.8	9.6	20.4	1.04	11.4
86	JALALA-T4	11	10.8	3.6	14.4	1.03	11.3
87	JALALA-T5	11	9.6	0	9.6	1.04	11.4
88	JAMRUD I-T1	11	21.6	0	21.6	1.03	11.4
89	JAMRUD I-T2	11	20.4	0	20.4	1.04	11.4
90	JAMRUD I-T3	11	9.6	0	9.6	1.04	11.4
91	JAMRUD I-T4	11	1.2	0	1.2	1.04	11.4
92	JEHANGRA-T1	11	2.4	0	2.4	1.01	11.1
93	JEHANGRA-T2	11	6	0	6	1.03	11.3
94	JEHANGRA-T3	11	0	0	0	1.01	11.1
95	JUTILIST-T1	11	1.2	0	1.2	1.03	11.3
96	JUTILIST-T2	11	1.2	0	1.2	1.04	11.5
97	K.KHELA-T1	11	7.2	0	7.2	1.03	11.3
98	K.KHELA-T2	11	10.8	0	10.8	1.02	11.2
99	K.T SHIP-T1	11	13.2	0	13.2	1.02	11.3
100	K.T SHIP-T2	11	6	7.2	13.2	1.02	11.3
101	KAKASAIB T-1	11	0	2.4	2.4	1.03	11.4
102	KAKASAIB T-2	11	0	2.4	2.4	1.03	11.4
103	KARAK-T1	11	10.8	2.4	13.2	1.01	11.1
104	KARAK-T2	11	9.6	2.4	12	1.01	11.1
105	KARAK-T3	11	9.6	2.4	12	1.01	11.1
106	KATLANG-T1	11	7.2	0	7.2	1.02	11.2
107	KATLANG-T2	11	4.8	0	4.8	1.03	11.3
108	KHESHKI-T1	11	0	0	0	1.03	11.3

Voltage Summary of 11 KV Bus Bars After Addition of Capacitors Obtained from OPF							
Sr. No.	Bus Name	Base kV	Capacitor Demand till 2015	Additional Capacitors Required till 2018	Final List of Capacitors till 2018	Voltage (pu)	Voltage (kV)
109	KOHAT-T4	11	14.4	0	14.4	1.05	11.5
110	KOHAT SP-T1	11	7.2	9.6	16.8	1.03	11.3
111	KOHAT SP-T2	11	9.6	6	15.6	1.03	11.3
112	KRM.GRHI-T1	11	4.8	3.6	8.4	1.04	11.4
113	KRM.GRHI-T2	11	2.4	1.2	3.6	1.04	11.4
114	KULACHI-T1	11	2.4	1.2	3.6	1.04	11.4
115	LACHI-T1	11	12	0	12	1.04	11.5
116	LACHI-T2	11	6	0	6	1.02	11.2
117	MADYAN-T1	11	0	0	0	1.03	11.3
118	MADYAN-T2	11	0	0	0	1.03	11.3
119	MAJUHI-T1	11	3.6	0	3.6	1.02	11.1
120	MANSEHRA-T1	11	4.8	0	4.8	1.02	11.2
121	MANSEHRA-T2	11	7.2	0	7.2	1.02	11.2
122	MANSEHRA-T3	11	9.6	0	9.6	1.01	11.1
123	MARDAN 2-T1	11	14.4	0	14.4	1.02	11.2
124	MARDAN 2-T2	11	15.6	0	15.6	1.02	11.2
125	MARDAN III T1	11	0	1.2	1.2	1.03	11.3
126	MARDAN III T2	11	0	1.2	1.2	1.03	11.3
127	MARDAN-T1	11	0	0	0	1.01	11.1
128	MARDAN-T2	11	3.6	0	3.6	1.00	11.1
129	MATANI-T2	11	6	2.4	8.4	1.03	11.4
130	MATANI-T3	11	8.4	1.2	9.6	1.03	11.4
131	MATANI-T4	11	3.6	1.2	4.8	1.03	11.4
132	MUZAFABAD-T1	11	8.4	0	8.4	1.03	11.3
133	MUZAFABAD-T2	11	7.2	0	7.2	1.03	11.3
134	MUZAFABAD-T4	11	4.8	0	4.8	1.03	11.3
135	NAGUMAN T-1	11	0	0	0	1.01	11.2
136	NAGUMAN T-2	11	0	0	0	1.01	11.2
137	NATIAGALI-T1	11	3.6	0	3.6	1.02	11.2
138	NAUSERY-T1	11	9.6	1.2	10.8	1.02	11.2
139	NIZAMPUR-T1	11	2.4	0	2.4	1.03	11.3
140	NOWSHCITY-T1	11	4.8	0	4.8	1.03	11.3
141	NOWSHCITY-T3	11	4.8	0	4.8	1.04	11.5
142	NOWSHCITY-T4	11	0	0	0	1.02	11.2
143	NOWSHR I-T1	11	7.2	0	7.2	1.04	11.5
144	NOWSHR I-T2	11	4.8	0	4.8	1.04	11.5
145	NOWSHR I-T3	11	2.4	0	2.4	1.02	11.2
146	OGHI-T1	11	2.4	1.2	3.6	1.01	11.1
147	OGHI-T2	11	3.6	0	3.6	1.01	11.1
148	PABBI-T1	11	7.2	3.6	10.8	1.02	11.2
149	PABBI-T2	11	7.2	3.6	10.8	1.03	11.3
150	PABBI-T3	11	0	2.4	2.4	1.02	11.3
151	PAROVA-T1	11	3.6	0	3.6	1.03	11.4
152	PAROVA-T2	11	5.6	1.6	7.2	1.03	11.3
153	PAROVA-T3	11	3.6	0	3.6	1.03	11.4
154	PATTAN-T1	11	1.2	2.4	3.6	1.00	11.0
155	PESH CITY-T1	11	12	2.4	14.4	1.02	11.2
156	PESH CITY-T2	11	7.2	6	13.2	1.02	11.3
157	PESH CITY-T3	11	10.8	6	16.8	1.03	11.3
158	PESH UNIV-T1	11	9.6	0	9.6	1.04	11.5
159	PESH UNIV-T2	11	7.2	0	7.2	1.02	11.2
160	PESH UNIV-T3	11	7.2	0	7.2	1.02	11.3
161	PESH IND-T1	11	18	1.2	19.2	1.03	11.4
162	PESH IND-T2	11	13.2	1.2	14.4	1.04	11.4
163	PESH IND-T3	11	13.2	1.2	14.4	1.04	11.4
164	PESHCANT-T1	11	8.4	0	8.4	1.02	11.2

Voltage Summary of 11 KV Bus Bars After Addition of Capacitors Obtained from OPF							
Sr. No.	Bus Name	Base kV	Capacitor Demand till 2015	Additional Capacitors Required till 2018	Final List of Capacitors till 2018	Voltage (pu)	Voltage (kV)
165	PESHCANT-T2	11	10.8	0	10.8	1.02	11.2
166	PESHCANT-T3	11	6	0	6	1.02	11.2
167	PESHCANT-T4	11	6	0	6	1.02	11.2
168	PESH FRT-T1	11	7.2	0	7.2	1.02	11.2
169	PESH FRT-T2	11	7.2	0	7.2	1.02	11.2
170	PEZU-T1	11	6	0	6	1.03	11.4
171	PEZU-T2	11	4.8	0	4.8	1.01	11.2
172	PPCCHARS-T1	11	0	1.2	1.2	1.03	11.3
173	RAJJAR-T1	11	0	1.2	1.2	1.03	11.4
174	RAJJAR-T2	11	4.8	2.4	7.2	1.03	11.4
175	R BABA-T1	11	0	4.8	4.8	1.03	11.3
176	R BABA-T2	11	0	2.4	2.4	1.03	11.4
177	R BABA-T3	11	0	1.2	1.2	1.02	11.3
178	RIDI-BEHRT-1	11	0	0	0	1.03	11.3
179	RIDI-BEHRT-2	11	0	0	0	1.03	11.3
180	S NURANG-T1	11	8.4	4.8	13.2	1.02	11.2
181	S NURANG-T2	11	4.8	0	4.8	1.03	11.3
182	S NURANG-T3	11	10.8	0	10.8	1.02	11.3
183	SABIR ABD-T1	11	7.2	0	7.2	1.01	11.1
184	SAKHI CH-T1	11	3.6	0	3.6	1.04	11.4
185	SAKHI CH-T2	11	4.8	0	4.8	1.04	11.4
186	SAKHI CH-T3	11	6	0	6	1.03	11.3
187	SHABQADAR-T3	11	4.8	3.6	8.4	1.03	11.3
188	SHABQADAR-T4	11	7.2	1.2	8.4	1.03	11.3
189	SHABQADAR-T5	11	6	2.4	8.4	1.03	11.3
190	SHAHIBAGH-T3	11	7.2	0	7.2	1.05	11.5
191	SHAHIBAGH-T5	11	7.2	0	7.2	1.02	11.2
192	SHAHIBAGH-T6	11	7.2	0	7.2	1.03	11.4
193	SHAIBG N-T1	11	0	2.4	2.4	1.04	11.4
194	SHAIBG N-T2	11	0	1.2	1.2	1.02	11.3
195	SANGLAP-T1	11	4.8	0	4.8	1.03	11.3
196	SHMUHDI-T1	11	4.8	0	4.8	1.02	11.2
197	SHMUHDI-T2	11	4.8	0	4.8	1.02	11.2
198	SIRAJ BBA-T1	11	3.6	0	3.6	1.03	11.3
199	SIRAJ BBA-T2	11	4.8	0	4.8	1.02	11.2
200	SWABI-T1	11	16.8	0	16.8	1.04	11.5
201	SWABI-T2	11	6	0	6	1.04	11.4
202	SWABI-T3	11	7.2	0	7.2	1.04	11.5
203	SWAT-T1	11	16.8	0	16.8	1.02	11.2
204	SWAT-T2	11	13.2	0	13.2	1.02	11.3
205	SWAT-T3	11	8.4	0	8.4	1.01	11.1
206	SWAT-T5	11	15.6	0	15.6	1.02	11.2
207	TAJAZAI-T1	11	7.2	4.8	12	1.02	11.2
208	TAJAZAI-T1	11	2.4	4.8	7.2	1.05	11.5
209	TAJAZAI-T2	11	3.6	0	3.6	1.03	11.3
210	TAJAZAI-T2	11	2.4	4.8	7.2	1.05	11.5
211	TALL-T2	11	8.4	2.4	10.8	1.03	11.4
212	TALL-T3	11	8.4	2.4	10.8	1.03	11.4
213	TANGI-T1	11	4.8	4.8	9.6	1.03	11.3
214	TANGI-T2	11	7.2	3.6	10.8	1.03	11.3
215	TANGI-T3	11	4.8	2.4	7.2	1.03	11.3
216	TANK-T4	11	6	3.6	9.6	1.03	11.3
217	TANK-T6	11	7.2	1.2	8.4	1.03	11.4
218	TANK-T7	11	7.2	1.2	8.4	1.03	11.4
219	TARBELA N-T1	11	4.8	0	4.8	1.03	11.4
220	TARBELA N-T2	11	3.6	0	3.6	1.03	11.3

Voltage Summary of 11 KV Bus Bars After Addition of Capacitors Obtained from OPF							
Sr. No.	**Bus Name**	**Base kV**	**Capacitor Demand till 2015**	**Additional Capacitors Required till 2018**	**Final List of Capacitors till 2018**	**Voltage (pu)**	**Voltage (kV)**
221	TARBELA R-T1	11	7.2	0	7.2	1.03	11.3
222	TARBELA R-T2	11	4.8	0	4.8	1.03	11.3
223	TARBELA R-T3	11	6	0	6	1.02	11.3
224	THAKOT-T1	11	0	0	0	1.01	11.1
225	THAKOT-T2	11	0	0	0	1.01	11.1
226	TIMERGARA-T2	11	0	0	0	1.04	11.5
227	TIMERGARA-T3	11	0	0	0	1.04	11.5
228	TIMERGARA-T4	11	0	0	0	1.04	11.5
229	TIMRGARH-T1	11	0	0	0	1.04	11.4
230	TIMRGARH-T2	11	2.4	0	2.4	1.04	11.5
231	WARAI-T1	11	10.8	0	10.8	1.03	11.3
232	WARSAK RDT-1	11	0	0	0	1.02	11.3
233	WARSAK RDT-2	11	0	0	0	1.02	11.3
234	WARSAK-T1	11	2.4	0	2.4	1.04	11.5
235	WARSAK-T2	11	2.4	0	2.4	1.05	11.5
236	WARSAK-T3	11	8.4	0	8.4	1.02	11.2
		Total	**1368.8**	**277.6**	**1646.4**		

REACTIVE POWER COMPENSATION STUDY OF PESCO

WITH ADDITIONAL CAPACITOR BANKS

PEAK LOAD: YEAR 2018

Exhibit No.2018-1.1

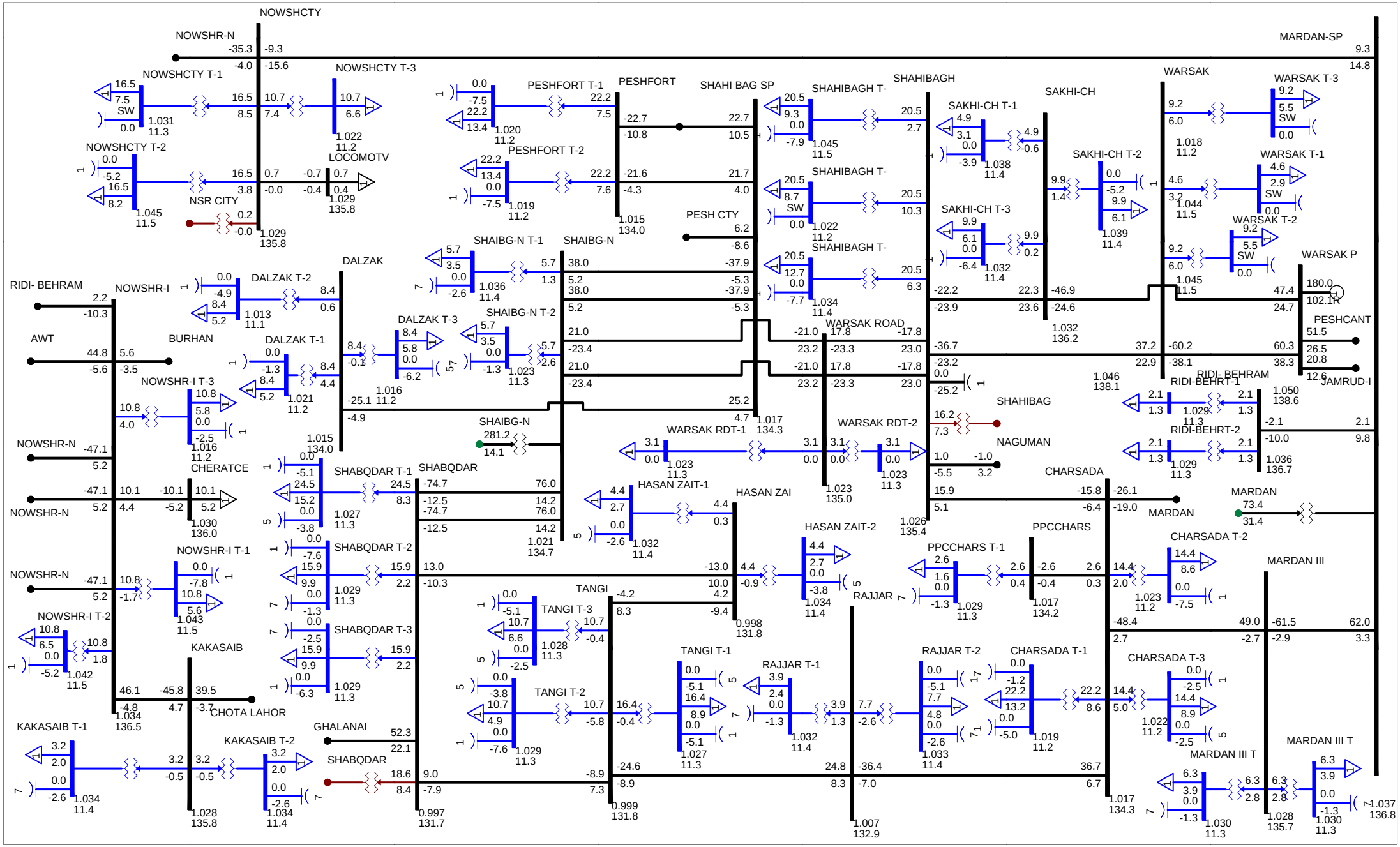

Reactive Power Compensation study of PESCO

With Additional Capacitor Banks

Peak Load : Year 2018

Exhibit No-2018-1.2

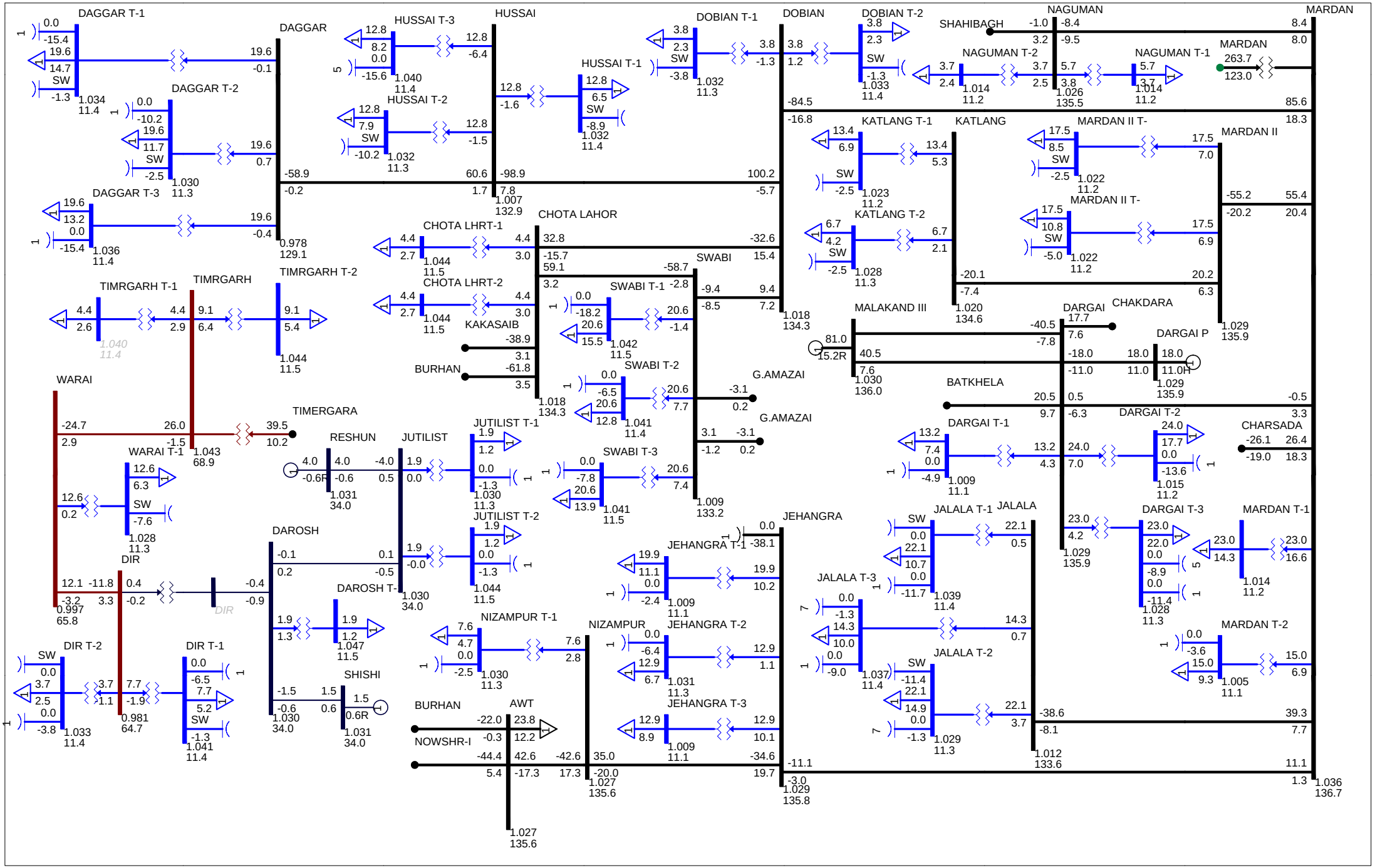

REACTIVE POWER COMPENSATION STUDY OF PESCO

WITH ADDITIONAL CAPACITOR BANKS

PEAK LOAD: YEAR 2018

Exhibit No-2018-1.3

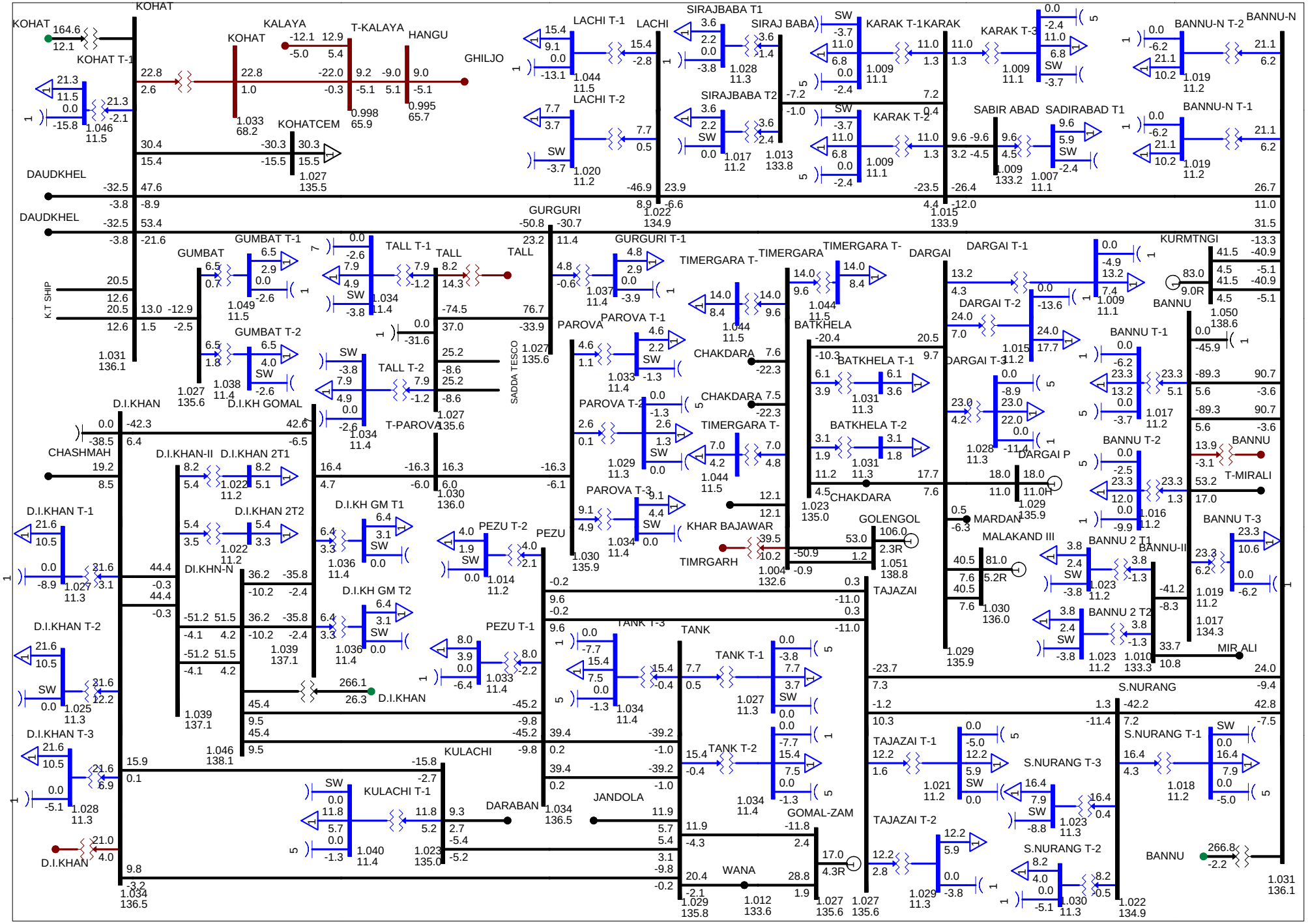

REACTIVE POWER COMPENSATION STUDY OF PESCO

WITH ADDITIONAL CAPACITOR BANKS

PEAK LOAD: YEAR 2018

Exhibit No-2018-1.4

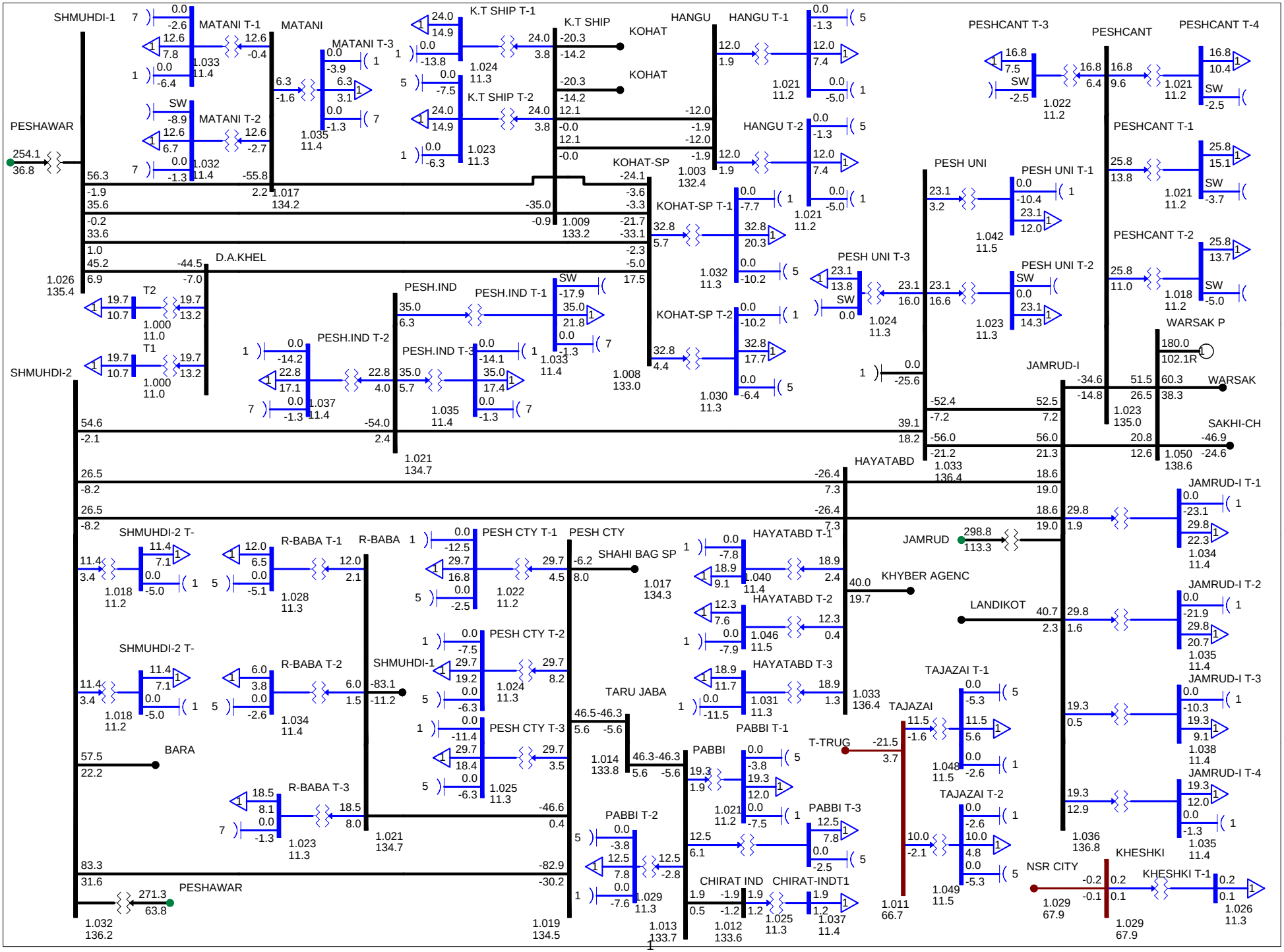

REACTIVE POWER COMPENSATION STUDY OF PESCO
WITH ADDITIONAL CAPACITOR BANKS
PEAK LOAD: YEAR 2018

Exhibit No-2018-1.5

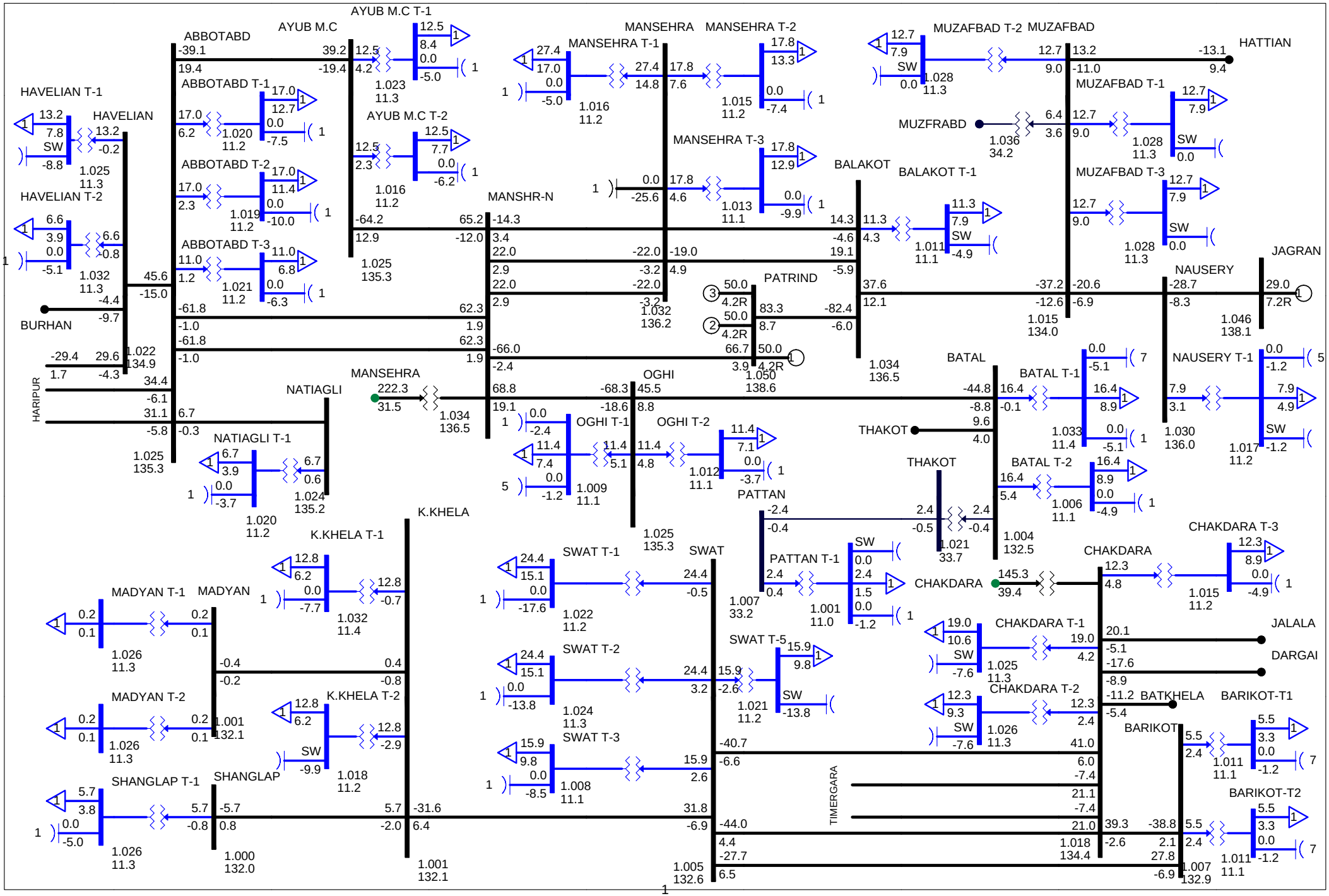

REACTIVE POWER COMPENSATION STUDY OF PESCO
WITH ADDITIONAL CAPACITOR BANKS
PEAK LOAD: YEAR 2018

Exhibit No-2018-1.6

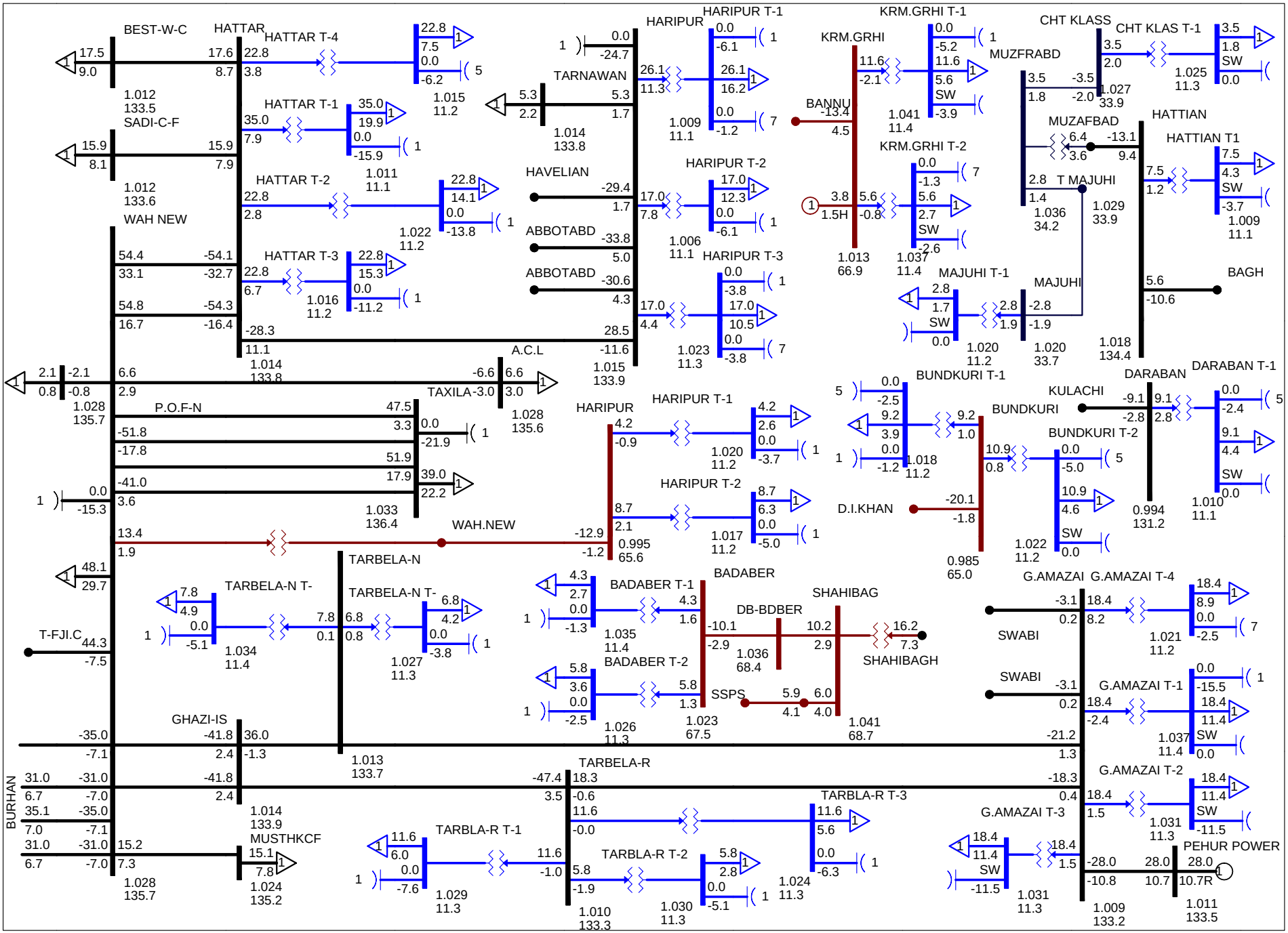

Appendix E

Step Sizes of Switched Shunt Capacitors

Reactive Power Compensation Study of PESCO

Peak Load, 2018

Step Sizes of Switched Shunt Capacitors for 132 kV

Sr. No.	Bus Number	Bus Name	Base kV	Capacitor Size	Short Cicuit MVA	Step Size	Delta-V	No. of Steps
1	1340	BANNU	132	44.40	1163.20	12	1.03%	3x12+1x8.4
2	7430	D.I.KHAN	132	36.00	663.59	12	1.81%	3
3	1410	HARIPUR	132	24.00	2647.39	6	0.23%	4
4	1150	JEHANGRA	132	36.00	1655.23	12	0.72%	3
5	1380	MANSEHRA	132	24.00	1817.95	6	0.33%	4
6	1270	PESH UNI	132	24.00	2107.14	6	0.28%	4
7	1190	SHAHIBAGH	132	24.00	1685.62	6	0.36%	4
8	1315	TALL	132	30.00	503.44	8.4	1.67%	3x8.4+1x4.8
			Total	**242.40**				

Reactive Power Compensation Study of PESCO

Peak Load, 2018

Step Sizes of Switched Shunt Capacitors for 11 kV

Sr. No.	Bus Number	Bus Name	Base kV	Rate A (MVA)	Capacitor Size	Short Cicuit MVA	Step Size	Delta-V	No. of Steps
1	13601	ABBOTABD T-1	11	40	7.20	271.19	2.4	0.88%	2x2.4+2x1.2
2	13602	ABBOTABD T-2	11	40	9.60	271.19	2.4	0.88%	4
3	13603	ABBOTABD T-3	11	26	6.00	185.43	2.4	1.29%	1x2.4+3x1.2
4	13701	AYUB M.C T-1	11	26	4.80	183.28	1.2	0.65%	4
5	13702	AYUB M.C T-2	11	26	6.00	183.28	2.4	1.31%	1x2.4+3x1.2
6	16201	BADABER T-1	11	7.5	1.20	74.68	1.2	1.61%	1
7	16202	BADABER T-2	11	10	2.40	82.35	1.2	1.46%	2
8	14001	BALAKOT T-1	11	13	10.80	93.86	2.4	2.56%	4x2.4+1x1.2
9	13421	BANNU 2 T1	11	13	6.00	89.06	2.4	2.69%	1x2.4+3x1.2
10	13422	BANNU 2 T2	11	13	6.00	89.06	2.4	2.69%	1x2.4+3x1.2
11	13401	BANNU T-1	11	40	9.60	246.29	2.4	0.97%	4
12	13402	BANNU T-2	11	40	12.00	246.29	3.6	1.46%	3x3.6+1x1.2
13	13403	BANNU T-3	11	40	6.00	246.29	2.4	0.97%	1x2.4+3x1.2
14	13321	BANNU-N T-1	11	26	6.00	178.37	2.4	1.35%	1x2.4+3x1.2
15	13322	BANNU-N T-2	11	26	6.00	178.37	2.4	1.35%	1x2.4+3x1.2
16	11351	BARIKOT-T1	11	13	1.20	92.98	1.2	1.29%	1
17	11352	BARIKOT-T2	11	13	1.20	92.98	1.2	1.29%	1
18	13901	BATAL T-1	11	26	9.60	188.78	2.4	1.27%	4
19	13902	BATAL T-2	11	26	4.80	188.78	1.2	0.64%	4
20	18901	BUNDKURI T-1	11	13	3.60	90.01	1.2	1.33%	3
21	18902	BUNDKURI T-2	11	13	10.80	90.01	2.4	2.67%	4x2.4+1x1.2
22	11301	CHAKDARA T-1	11	40	9.60	253.33	2.4	0.95%	4
23	11302	CHAKDARA T-2	11	26	8.40	175.98	2.4	1.36%	3x2.4+1x1.2
24	11303	CHAKDARA T-3	11	26	4.80	175.98	1.2	0.68%	4
25	10901	CHARSADA T-1	11	40	6.00	279.17	2.4	0.86%	1x2.4+3x1.2
26	10902	CHARSADA T-2	11	26	7.20	188.78	2.4	1.27%	2x2.4+2x1.2
27	10903	CHARSADA T-3	11	26	4.80	188.78	1.2	0.64%	4
28	20191	CHT KLAS T-1	11	4	4.80	35.81	1.2	3.35%	4
29	74241	D.I.KH GM T1	11	26	3.60	188.78	1.2	0.64%	3
30	74242	D.I.KH GM T2	11	26	1.20	188.78	1.2	0.64%	1
31	74301	D.I.KHAN T-1	11	40	8.40	213.49	2.4	1.12%	3x2.4+1x1.2
32	74302	D.I.KHAN T-2	11	40	8.40	213.49	2.4	1.12%	3x2.4+1x1.2
33	74303	D.I.KHAN T-3	11	40	4.80	213.49	1.2	0.56%	4
34	10781	DAGGAR T-1	11	26	19.20	188.66	4.8	2.54%	4
35	10782	DAGGAR T-2	11	26	16.80	188.66	4.8	2.54%	3x4.8+1x2.4
36	10783	DAGGAR T-3	11	26	14.40	188.66	3.6	1.91%	4
37	11871	DALZAK T-1	11	26	1.20	188.66	1.2	0.64%	1
38	11872	DALZAK T-2	11	26	4.80	188.66	1.2	0.64%	4
39	11873	DALZAK T-3	11	26	6.00	188.66	2.4	1.27%	1x2.4+3x1.2
40	18801	DARABAN T-1	11	26	8.40	162.83	2.4	1.47%	3x2.4+1x1.2
41	11201	DARGAI T-1	11	40	4.80	279.17	1.2	0.43%	4
42	11202	DARGAI T-2	11	26	13.20	172.81	3.6	2.78%	3x3.6+1x2.4
43	11203	DARGAI T-3	11	26	19.20	172.81	4.8	2.78%	4
44	16901	DIR T-1	11	13	10.80	91.54	2.4	2.62%	4x2.4+1x1.2
45	16902	DIR T-2	11	6.3	8.40	52.52	2.4	4.57%	2x2.4+3x1.2
46	10691	DOBIAN T-1	11	13	18.00	96.11	3.6	3.75%	5
47	10692	DOBIAN T-2	11	13	6.00	96.11	2.4	2.50%	1x2.4+3x1.2

Step Sizes of Switched Shunt Capacitors for 11 kV									
Sr. No.	Bus Number	Bus Name	Base kV	Rate A (MVA)	Capacitor Size	Short Cicuit MVA	Step Size	Delta-V	No. of Steps
48	14451	G.AMAZAI T-1	11	26	19.20	180.85	4.8	2.65%	4
49	14452	G.AMAZAI T-2	11	26	16.80	180.85	4.8	2.65%	3x4.8+1x2.4
50	14453	G.AMAZAI T-3	11	26	14.40	180.85	3.6	1.99%	4
51	14454	G.AMAZAI T-4	11	26	2.40	180.85	1.2	0.66%	2
52	13071	GUMBAT T-1	11	13	2.40	91.54	1.2	1.31%	2
53	13072	GUMBAT T-2	11	13	3.60	91.54	1.2	1.31%	3
54	13021	GURGURI T-1	11	6.3	3.60	72.28	1.2	1.66%	3
55	13121	HANGU T-1	11	26	6.00	170.00	2.4	1.41%	1x2.4+3x1.2
56	13122	HANGU T-2	11	26	6.00	170.00	2.4	1.41%	1x2.4+3x1.2
57	14101	HARIPUR T-1	11	40	7.20	280.41	2.4	0.86%	2x2.4+2x1.2
58	14102	HARIPUR T-2	11	26	6.00	189.17	2.4	1.27%	1x2.4+3x1.2
59	14103	HARIPUR T-3	11	26	7.20	189.17	2.4	1.27%	2x2.4+2x1.2
60	19301	HARIPUR T-1	11	6.3	3.60	64.40	1.2	1.86%	3
61	19302	HARIPUR T-2	11	13	4.80	91.54	1.2	1.31%	4
62	11171	HASAN ZAIT-1	11	13	2.40	96.24	1.2	1.25%	2
63	11172	HASAN ZAIT-2	11	13	3.60	96.24	1.2	1.25%	3
64	14201	HATTAR T-1	11	40	15.60	282.12	4.8	1.70%	3x4.8+1x1.2
65	14202	HATTAR T-2	11	40	13.20	282.12	3.6	1.28%	3x3.6+1x2.4
66	14203	HATTAR T-3	11	26	10.80	189.79	3.6	1.90%	3
67	14204	HATTAR T-4	11	26	6.00	189.79	2.4	1.26%	1x2.4+3x1.2
68	20171	HATTIAN T1	11	13	9.60	88.70	2.4	2.71%	4
69	13651	HAVELIAN T-1	11	26	12.00	185.43	3.6	1.94%	3x3.6+1x1.2
70	13652	HAVELIAN T-2	11	13	4.80	89.06	1.2	1.35%	4
71	12451	HAYATABD T-1	11	40	7.20	277.84	2.4	0.86%	2x2.4+2x1.2
72	12452	HAYATABD T-2	11	40	7.20	277.84	2.4	0.86%	2x2.4+2x1.2
73	12453	HAYATABD T-3	11	40	10.80	277.84	3.6	1.30%	3
74	10721	HUSSAI T-1	11	26	15.60	174.43	4.8	2.75%	3x4.8+1x1.2
75	10722	HUSSAI T-2	11	26	18.00	174.43	4.8	2.75%	3x4.8+1x3.6
76	10723	HUSSAI T-3	11	26	14.40	174.43	3.6	2.06%	4
77	11181	JALALA T-1	11	40	20.40	247.11	6	2.43%	3x6+1x2.4
78	11182	JALALA T-2	11	40	14.40	247.11	3.6	1.46%	4
79	11183	JALALA T-3	11	26	9.60	173.09	2.4	1.39%	4
80	12401	JAMRUD-I T-1	11	40	21.60	277.62	6	2.16%	3x6+1x3.6
81	12402	JAMRUD-I T-2	11	40	20.40	277.62	6	2.16%	3x6+1x2.4
82	12403	JAMRUD-I T-3	11	26	9.60	188.52	2.4	1.27%	4
83	12404	JAMRUD-I T-4	11	26	1.20	188.52	1.2	0.64%	1
84	11501	JEHANGRA T-1	11	40	2.40	264.12	1.2	0.45%	2
85	11502	JEHANGRA T-2	11	26	6.00	181.41	2.4	1.32%	1x2.4+3x1.2
86	50191	JUTILIST T-1	11	4	1.20	35.39	1.2	3.39%	1
87	50192	JUTILIST T-2	11	4	1.20	35.39	1.2	3.39%	1
88	11421	K.KHELA T-1	11	26	7.20	185.06	2.4	1.30%	2x2.4+2x1.2
89	11422	K.KHELA T-2	11	26	10.80	185.06	3.6	1.95%	3
90	13061	K.T SHIP T-1	11	26	13.20	185.06	3.6	1.95%	3x3.6+1x2.4
91	13062	K.T SHIP T-2	11	26	13.20	185.06	3.6	1.95%	3x3.6+1x2.4
92	11721	KAKASAIB T-1	11	13	2.40	95.97	1.2	1.25%	2
93	11722	KAKASAIB T-2	11	13	2.40	95.97	1.2	1.25%	2
94	13351	KARAK T-1	11	26	13.20	182.81	3.6	1.97%	3x3.6+1x2.4
95	13352	KARAK T-2	11	26	12.00	182.81	3.6	1.97%	3x3.6+1x1.2
96	13353	KARAK T-3	11	26	12.00	182.81	3.6	1.97%	3x3.6+1x1.2
97	10751	KATLANG T-1	11	26	7.20	182.81	2.4	1.31%	2x2.4+2x1.2
98	10752	KATLANG T-2	11	26	4.80	182.81	1.2	0.66%	4

Step Sizes of Switched Shunt Capacitors for 11 kV									
Sr. No.	Bus Number	Bus Name	Base kV	Rate A (MVA)	Capacitor Size	Short Cicuit MVA	Step Size	Delta-V	No. of Steps
99	13001	KOHAT T-1	11	26	14.40	182.81	3.6	1.97%	4
100	13011	KOHAT-SP T-1	11	40	16.80	272.21	4.8	1.76%	3x4.8+1x2.4
101	13012	KOHAT-SP T-2	11	40	15.60	272.21	4.8	1.76%	3x4.8+1x1.2
102	17901	KRM.GRHI T-1	11	13	8.40	91.54	2.4	2.62%	3x2.4+1x1.2
103	17902	KRM.GRHI T-2	11	6.3	3.60	52.70	1.2	2.28%	3
104	18701	KULACHI T-1	11	26	3.60	188.56	1.2	0.64%	3
105	13201	LACHI T-1	11	26	12.00	169.58	3.6	2.12%	3x3.6+1x1.2
106	13202	LACHI T-2	11	13	6.00	92.21	2.4	2.60%	1x2.4+3x1.2
107	20131	MAJUHI T-1	11	4	3.60	33.05	1.2	3.63%	3
108	13801	MANSEHRA T-1	11	40	4.80	269.78	1.2	0.44%	4
109	13802	MANSEHRA T-2	11	26	7.20	184.89	2.4	1.30%	2x2.4+2x1.2
110	13803	MANSEHRA T-3	11	26	9.60	184.89	2.4	1.30%	4
111	10741	MARDAN II T-	11	40	14.40	275.13	3.6	1.31%	4
112	10742	MARDAN II T-	11	40	15.60	275.13	4.8	1.74%	3x4.8+1x1.2
113	10711	MARDAN III T1	11	26	1.20	190.68	1.2	0.63%	1
114	10712	MARDAN III T2	11	26	1.20	190.68	1.2	0.63%	1
115	10702	MARDAN T-2	11	26	3.60	190.68	1.2	0.63%	3
116	12941	MATANI T-1	11	26	8.40	182.36	2.4	1.32%	3x2.4+1x1.2
117	12942	MATANI T-2	11	26	9.60	182.36	2.4	1.32%	4
118	12943	MATANI T-3	11	13	4.80	96.02	1.2	1.25%	4
119	20151	MUZAFBAD T-1	11	26	8.40	188.56	2.4	1.27%	3x2.4+1x1.2
120	20152	MUZAFBAD T-2	11	26	7.20	188.56	2.4	1.27%	2x2.4+2x1.2
121	20153	MUZAFBAD T-3	11	26	4.80	188.56	1.2	0.64%	4
122	13751	NATIAGLI T-1	11	13	3.60	93.28	1.2	1.29%	3
123	14551	NAUSERY T-1	11	13	10.80	85.14	2.4	2.82%	4x2.4+1x1.2
124	11601	NIZAMPUR T-1	11	13	2.40	97.52	1.2	1.23%	2
125	11651	NOWSHCTY T-1	11	40	4.80	276.55	1.2	0.43%	4
126	11652	NOWSHCTY T-2	11	40	4.80	276.55	1.2	0.43%	4
127	11701	NOWSHR-I T-1	11	26	7.20	191.01	2.4	1.26%	2x2.4+2x1.2
128	11702	NOWSHR-I T-2	11	26	4.80	191.01	1.2	0.63%	4
129	11703	NOWSHR-I T-3	11	26	2.40	191.01	1.2	0.63%	2
130	13851	OGHI T-1	11	13	3.60	96.30	1.2	1.25%	3
131	13852	OGHI T-2	11	13	3.60	96.30	1.2	1.25%	3
132	11801	PABBI T-1	11	40	10.80	279.17	3.6	1.29%	3
133	11802	PABBI T-2	11	26	10.80	188.56	3.6	1.91%	3
134	11803	PABBI T-3	11	26	2.40	188.56	1.2	0.64%	2
135	74201	PAROVA T-1	11	13	3.60	80.30	1.2	1.49%	3
136	74202	PAROVA T-2	11	7.5	7.20	74.37	2.4	3.23%	4x1.2+1x2.4
137	74203	PAROVA T-3	11	26	3.60	188.56	1.2	0.64%	3
138	13991	PATTAN T-1	11	4	3.60	29.98	1.2	4.00%	3
139	11851	PESH CTY T-1	11	40	14.40	287.01	3.6	1.25%	4
140	11852	PESH CTY T-2	11	40	13.20	287.01	3.6	1.25%	3x3.6+1x2.4
141	11853	PESH CTY T-3	11	40	16.80	287.01	4.8	1.67%	3x4.8+1x2.4
142	12701	PESH UNI T-1	11	40	9.60	275.30	2.4	0.87%	4
143	12702	PESH UNI T-2	11	40	7.20	275.30	2.4	0.87%	2x2.4+2x1.2
144	12703	PESH UNI T-3	11	40	7.20	275.30	2.4	0.87%	2x2.4+2x1.2
145	12801	PESH.IND T-1	11	40	19.20	268.70	4.8	1.79%	4
146	12802	PESH.IND T-2	11	26	14.40	184.22	3.6	1.95%	4
147	12803	PESH.IND T-3	11	40	14.40	268.70	3.6	1.34%	4
148	12601	PESHCANT T-1	11	40	8.40	263.33	2.4	0.91%	3x2.4+1x1.2
149	12602	PESHCANT T-2	11	40	10.80	263.33	3.6	1.37%	3

Step Sizes of Switched Shunt Capacitors for 11 kV									
Sr. No.	Bus Number	Bus Name	Base kV	Rate A (MVA)	Capacitor Size	Short Cicuit MVA	Step Size	Delta-V	No. of Steps
150	12603	PESHCANT T-3	11	26	6.00	182.28	2.4	1.32%	1x2.4+3x1.2
151	12604	PESHCANT T-4	11	26	6.00	182.28	2.4	1.32%	1x2.4+3x1.2
152	11961	PESHFORT T-1	11	40	7.20	278.40	2.4	0.86%	2x2.4+2x1.2
153	11962	PESHFORT T-2	11	40	7.20	278.40	2.4	0.86%	2x2.4+2x1.2
154	18301	PEZU T-1	11	26	6.00	162.83	2.4	1.47%	1x2.4+3x1.2
155	18302	PEZU T-2	11	13	4.80	90.01	1.2	1.33%	4
156	11001	PPCCHARS T-1	11	13	1.20	97.57	1.2	1.23%	1
157	10951	RAJJAR T-1	11	26	1.20	182.15	1.2	0.66%	1
158	10952	RAJJAR T-2	11	26	7.20	182.15	2.4	1.32%	2x2.4+2x1.2
159	12571	R-BABA T-1	11	40	4.80	282.20	1.2	0.43%	4
160	12572	R-BABA T-2	11	40	2.40	282.20	1.2	0.43%	2
161	12573	R-BABA T-3	11	40	1.20	282.20	1.2	0.43%	1
162	13451	S.NURANG T-1	11	26	13.20	166.80	3.6	2.16%	3x3.6+1x2.4
163	13452	S.NURANG T-2	11	13	4.80	91.32	1.2	1.31%	4
164	13453	S.NURANG T-3	11	26	10.80	166.80	3.6	2.16%	3
165	13361	SADIRABAD T1	11	13	7.20	86.47	2.4	2.78%	2x2.4+2x1.2
166	11921	SAKHI-CH T-1	11	26	3.60	183.84	1.2	0.65%	3
167	11922	SAKHI-CH T-2	11	26	4.80	183.84	1.2	0.65%	4
168	11923	SAKHI-CH T-3	11	26	6.00	183.84	2.4	1.31%	1x2.4+3x1.2
169	11151	SHABQDAR T-1	11	40	8.40	273.76	2.4	0.88%	3x2.4+1x1.2
170	11152	SHABQDAR T-2	11	26	8.40	186.08	2.4	1.29%	3x2.4+1x1.2
171	11153	SHABQDAR T-3	11	26	8.40	186.08	2.4	1.29%	3x2.4+1x1.2
172	11902	SHAHIBAGH T-1	11	40	7.20	269.47	2.4	0.89%	2x2.4+2x1.2
173	11903	SHAHIBAGH T-2	11	40	7.20	269.47	2.4	0.89%	2x2.4+2x1.2
174	11904	SHAHIBAGH T-3	11	40	7.20	269.47	2.4	0.89%	2x2.4+2x1.2
175	11891	SHAIBG-N T-1	11	13	2.40	98.57	1.2	1.22%	2
176	11892	SHAIBG-N T-2	11	13	1.20	98.57	1.2	1.22%	1
177	11461	SHANGLAP T-1	11	7.5	4.80	67.46	1.2	1.78%	4
178	12901	SHMUHDI-2 T-1	11	13	4.80	98.87	1.2	1.21%	4
179	12902	SHMUHDI-2 T-2	11	13	4.80	98.87	1.2	1.21%	4
180	13381	SIRAJBABA T1	11	13	3.60	89.06	1.2	1.35%	3
181	13382	SIRAJBABA T2	11	13	4.80	89.06	1.2	1.35%	4
182	10801	SWABI T-1	11	40	16.80	259.65	4.8	1.85%	3x4.8+1x2.4
183	10802	SWABI T-2	11	40	6.00	259.65	2.4	0.92%	1x2.4+3x1.2
184	10803	SWABI T-3	11	40	7.20	259.65	2.4	0.92%	2x2.4+2x1.2
185	11401	SWAT T-1	11	40	16.80	227.88	4.8	2.11%	3x4.8+1x2.4
186	11402	SWAT T-2	11	40	13.20	227.88	3.6	1.58%	3x3.6+1x2.4
187	11403	SWAT T-3	11	26	8.40	163.37	2.4	1.47%	3x2.4+1x1.2
188	11405	SWAT T-5	11	26	15.60	163.37	4.8	2.94%	3x4.8+1x1.2
189	50151	TAJAZAI T-1	11	26	12.00	166.82	3.6	2.16%	3x3.6+1x1.2
190	50161	TAJAZAI T-1	11	15	7.20	64.32	2.4	3.73%	1x2.4+4x1.2
191	50152	TAJAZAI T-2	11	26	3.60	183.84	1.2	0.65%	3
192	50162	TAJAZAI T-2	11	13	7.20	91.54	2.4	2.62%	2x2.4+2x1.2
193	13151	TALL T-1	11	26	10.80	146.36	3.6	2.46%	3
194	13152	TALL T-2	11	26	10.80	146.36	3.6	2.46%	3
195	11101	TANGI T-1	11	40	9.60	264.35	2.4	0.91%	4
196	11102	TANGI T-2	11	26	10.80	181.77	3.6	1.98%	3
197	11103	TANGI T-3	11	26	7.20	181.77	2.4	1.32%	2x2.4+2x1.2
198	14601	TANK T-1	11	13	9.60	89.34	2.4	2.69%	4
199	14602	TANK T-2	11	26	8.40	160.69	2.4	1.49%	3x2.4+1x1.2
200	14603	TANK T-3	11	26	8.40	160.69	2.4	1.49%	3x2.4+1x1.2

Step Sizes of Switched Shunt Capacitors for 11 kV									
Sr. No.	**Bus Number**	**Bus Name**	**Base kV**	**Rate A (MVA)**	**Capacitor Size**	**Short Cicuit MVA**	**Step Size**	**Delta-V**	**No. of Steps**
201	14501	TARBELA-N T-1	11	15	4.80	158.72	1.2	0.76%	4
202	14502	TARBELA-N T-2	11	13	3.60	95.58	1.2	1.26%	3
203	14401	TARBLA-R T-1	11	26	7.20	180.64	2.4	1.33%	2x2.4+2x1.2
204	14402	TARBLA-R T-2	11	13	4.80	95.29	1.2	1.26%	4
205	14403	TARBLA-R T-3	11	26	6.00	180.64	2.4	1.33%	1x2.4+3x1.2
206	16702	TIMRGARH T-2	11	13	2.40	91.54	1.2	1.31%	2
207	16751	WARAI T-1	11	13	10.80	91.54	2.4	2.62%	4x2.4+1x1.2
208	12101	WARSAK T-1	11	26	2.40	187.08	1.2	0.64%	2
209	12102	WARSAK T-2	11	26	2.40	187.08	1.2	0.64%	2
210	12103	WARSAK T-3	11	26	8.40	187.08	2.4	1.28%	3x2.4+1x1.2
				Total	**1646.40**				

Appendix F

Harmonic Resonance Analysis and Sizes of Detuning Reactors

F-1: Harmonic Resonance Analysis without/with Detuning Reactors

F-2: Summary of Recommended Sizes of Detuning Reactors

Reactive Power Compensation Study of PESCO

Peak load, Year 2018

Harmonic Resonance Analysis with/without Detuning Reactors

Sr. No.	Bus Name	Base kv	Rate A (MVA)	Capacitor Block (MVAR)	Harmonic Resonant Number Without Addition of Detuning Reactor	Detuning Reactor (H)	Harmoning Resonant Number With Detuning Reactor
1	ABBOTABD T-1	11	40	2.4	11	0.003152	6
2	ABBOTABD T-2	11	40	2.4	11	0.003152	6
3	ABBOTABD T-3	11	26	2.4	9	0.000405	8
4	AYUB M.C T-1	11	26	1.2	12	0.000166	12
5	AYUB M.C T-2	11	26	2.4	9	0.000405	8
6	BADABER T-1	11	7.5	1.2	8	0.00348	6
7	BADABER T-2	11	10	1.2	8	0.000338	8
8	BALAKOT T-1	11	13	2.4	6	0.000222	6
9	BANNU 2 T1	11	13	2.4	6	0.000222	6
10	BANNU 2 T2	11	13	2.4	6	0.000222	6
11	BANNU T-1	11	40	2.4	10	0.003152	6
12	BANNU T-2	11	40	3.6	8	0.00395	4
13	BANNU T-3	11	40	2.4	10	0.003152	6
14	BANNU-N T-1	11	26	2.4	9	0.000405	8
15	BANNU-N T-2	11	26	2.4	9	0.000405	8
16	BARIKOT-T1	11	13	1.2	9	0.000869	8
17	BARIKOT-T2	11	13	1.2	9	0.000869	8
18	BATAL T-1	11	26	2.4	9	0.000405	8
19	BATAL T-2	11	26	1.2	13	0.000166	12
20	BUNDKURI T-1	11	13	1.2	9	0.000869	8
21	BUNDKURI T-2	11	13	2.4	6	0.000222	6
22	CHAKDARA T-1	11	40	2.4	10	0.003152	6
23	CHAKDARA T-2	11	26	2.4	9	0.000405	8
24	CHAKDARA T-3	11	26	1.2	12	0.000166	12
25	CHARSADA T-1	11	40	2.4	11	0.003152	6
26	CHARSADA T-2	11	26	2.4	9	0.000405	8
27	CHARSADA T-3	11	26	1.2	13	0.000166	12
28	CHT KLAS T-1	11	4	1.2	5	0.0088	4
29	D.I.KH GM T1	11	26	1.2	13	0.000166	12
30	D.I.KH GM T2	11	26	1.2	13	0.000166	12
31	D.I.KHAN T-1	11	40	2.4	9	0.003152	6
32	D.I.KHAN T-2	11	40	2.4	9	0.003152	6
33	D.I.KHAN T-3	11	40	1.2	13	0.003162	8
34	DAGGAR T-1	11	26	4.8	6	0.00001	6
35	DAGGAR T-2	11	26	4.8	6	0.00001	6
36	DAGGAR T-3	11	26	3.6	7	0.000743	6
37	DALZAK T-1	11	26	1.2	13	0.000166	12
38	DALZAK T-2	11	26	1.2	13	0.000166	12
39	DALZAK T-3	11	26	2.4	9	0.000405	8
40	DARABAN T-1	11	26	2.4	8	0.000405	8
41	DARGAI T-1	11	40	1.2	15	0.003162	8
42	DARGAI T-2	11	26	3.6	7	0.000743	6
43	DARGAI T-3	11	26	4.8	6	0.00001	6
44	DIR T-1	11	13	2.4	6	0.000222	6
45	DIR T-2	11	6.3	2.4	5	0.0027	4
46	DOBIAN T-1	11	13	3.6	5	0.0024	4

Harmonic Resonance Analysis with/without Detuning Reactors							
Sr. No.	Bus Name	Base kv	Rate A (MVA)	Capacitor Block (MVAR)	Harmonic Resonant Number Without Addition of Detuning Reactor	Detuning Reactor (H)	Harmoning Resonant Number With Detuning Reactor
47	DOBIAN T-2	11	13	2.4	6	0.000222	6
48	G.AMAZAI T-1	11	26	4.8	6	0.00001	6
49	G.AMAZAI T-2	11	26	4.8	6	0.00001	6
50	G.AMAZAI T-3	11	26	3.6	7	0.000743	6
51	G.AMAZAI T-4	11	26	1.2	12	0.000166	12
52	GUMBAT T-1	11	13	1.2	9	0.000869	8
53	GUMBAT T-2	11	13	1.2	9	0.000869	8
54	GURGURI T-1	11	6.3	1.2	8	0.003	6
55	HANGU T-1	11	26	2.4	8	0.000405	8
56	HANGU T-2	11	26	2.4	8	0.000405	8
57	HARIPUR T-1	11	40	2.4	11	0.003152	6
58	HARIPUR T-2	11	26	2.4	9	0.000405	8
59	HARIPUR T-3	11	26	2.4	9	0.000405	8
60	HARIPUR T-1	11	6.3	1.2	7	0.003	6
61	HARIPUR T-2	11	13	1.2	9	0.000869	8
62	HASAN ZAIT-1	11	13	1.2	9	0.000869	8
63	HASAN ZAIT-2	11	13	1.2	9	0.000869	8
64	HATTAR T-1	11	40	4.8	8	0.003678	4
65	HATTAR T-2	11	40	3.6	9	0.00395	4
66	HATTAR T-3	11	26	3.6	7	0.000743	6
67	HATTAR T-4	11	26	2.4	9	0.000405	8
68	HATTIAN T1	11	13	2.4	6	0.000222	6
69	HAVELIAN T-1	11	26	3.6	7	0.000743	6
70	HAVELIAN T-2	11	13	1.2	9	0.000869	8
71	HAYATABD T-1	11	40	2.4	11	0.003152	6
72	HAYATABD T-2	11	40	2.4	11	0.003152	6
73	HAYATABD T-3	11	40	3.6	9	0.00395	4
74	HUSSAI T-1	11	26	4.8	6	0.00001	6
75	HUSSAI T-2	11	26	4.8	6	0.00001	6
76	HUSSAI T-3	11	26	3.6	7	0.000743	6
77	JALALA T-1	11	40	6	6	0.003	4
78	JALALA T-2	11	40	3.6	8	0.00395	4
79	JALALA T-3	11	26	2.4	8	0.000405	8
80	JAMRUD-I T-1	11	40	6	7	0.003	4
81	JAMRUD-I T-2	11	40	6	7	0.003	4
82	JAMRUD-I T-3	11	26	2.4	9	0.000405	8
83	JAMRUD-I T-4	11	26	1.2	13	0.000166	12
84	JEHANGRA T-1	11	40	1.2	15	0.003162	8
85	JEHANGRA T-2	11	26	2.4	9	0.000405	8
86	JUTILIST T-1	11	4	1.2	5	0.0088	4
87	JUTILIST T-2	11	4	1.2	5	0.0088	4
88	K.KHELA T-1	11	26	2.4	9	0.000405	8
89	K.KHELA T-2	11	26	3.6	7	0.000743	6
90	K.T SHIP T-1	11	26	3.6	7	0.000743	6
91	K.T SHIP T-2	11	26	3.6	7	0.000743	6
92	KAKASAIB T-1	11	13	1.2	9	0.000869	8
93	KAKASAIB T-2	11	13	1.2	9	0.000869	8
94	KARAK T-1	11	26	3.6	7	0.000743	6
95	KARAK T-2	11	26	3.6	7	0.000743	6
96	KARAK T-3	11	26	3.6	7	0.000743	6

Harmonic Resonance Analysis with/without Detuning Reactors							
Sr. No.	Bus Name	Base kv	Rate A (MVA)	Capacitor Block (MVAR)	Harmonic Resonant Number Without Addition of Detuning Reactor	Detuning Reactor (H)	Harmoning Resonant Number With Detuning Reactor
97	KATLANG T-1	11	26	2.4	9	0.000405	8
98	KATLANG T-2	11	26	1.2	12	0.000166	12
99	KOHAT T-1	11	26	3.6	7	0.000743	6
100	KOHAT-SP T-1	11	40	4.8	8	0.003678	4
101	KOHAT-SP T-2	11	40	4.8	8	0.003678	4
102	KRM.GRHI T-1	11	13	2.4	6	0.000222	6
103	KRM.GRHI T-2	11	6.3	1.2	7	0.003	6
104	KULACHI T-1	11	26	1.2	13	0.000166	12
105	LACHI T-1	11	26	3.6	7	0.000743	6
106	LACHI T-2	11	13	2.4	6	0.000222	6
107	MAJUHI T-1	11	4	1.2	5	0.0088	4
108	MANSEHRA T-1	11	40	1.2	15	0.003162	8
109	MANSEHRA T-2	11	26	2.4	9	0.000405	8
110	MANSEHRA T-3	11	26	2.4	9	0.000405	8
111	MARDAN II T-	11	40	3.6	9	0.00395	4
112	MARDAN II T-	11	40	4.8	8	0.003678	4
113	MARDAN III T1	11	26	1.2	13	0.000166	12
114	MARDAN III T2	11	26	1.2	13	0.000166	12
115	MARDAN T-2	11	26	1.2	13	0.000166	12
116	MATANI T-1	11	26	2.4	9	0.000405	8
117	MATANI T-2	11	26	2.4	9	0.000405	8
118	MATANI T-3	11	13	1.2	9	0.000869	8
119	MUZAFBAD T-1	11	26	2.4	9	0.000405	8
120	MUZAFBAD T-2	11	26	2.4	9	0.000405	8
121	MUZAFBAD T-3	11	26	1.2	13	0.000166	12
122	NATIAGLI T-1	11	13	1.2	9	0.000869	8
123	NAUSERY T-1	11	13	2.4	6	0.000222	6
124	NIZAMPUR T-1	11	13	1.2	9	0.000869	8
125	NOWSHCTY T-1	11	40	1.2	15	0.003162	8
126	NOWSHCTY T-2	11	40	1.2	15	0.003162	8
127	NOWSHR-I T-1	11	26	2.4	9	0.000405	8
128	NOWSHR-I T-2	11	26	1.2	13	0.000166	12
129	NOWSHR-I T-3	11	26	1.2	13	0.000166	12
130	OGHI T-1	11	13	1.2	9	0.000869	8
131	OGHI T-2	11	13	1.2	9	0.000869	8
132	PABBI T-1	11	40	3.6	9	0.00395	4
133	PABBI T-2	11	26	3.6	7	0.000743	6
134	PABBI T-3	11	26	1.2	13	0.000166	12
135	PAROVA T-1	11	13	1.2	8	0.000869	8
136	PAROVA T-2	11	7.5	2.4	6	0.00485	4
137	PAROVA T-3	11	26	1.2	13	0.000166	12
138	PATTAN T-1	11	4	1.2	5	0.0088	4
139	PESH CTY T-1	11	40	3.6	9	0.00395	4
140	PESH CTY T-2	11	40	3.6	9	0.00395	4
141	PESH CTY T-3	11	40	4.8	8	0.003678	4
142	PESH UNI T-1	11	40	2.4	11	0.003152	6
143	PESH UNI T-2	11	40	2.4	11	0.003152	6
144	PESH UNI T-3	11	40	2.4	11	0.003152	6
145	PESH.IND T-1	11	40	4.8	7	0.003678	4
146	PESH.IND T-2	11	26	3.6	7	0.000743	6

Harmonic Resonance Analysis with/without Detuning Reactors							
Sr. No.	Bus Name	Base kv	Rate A (MVA)	Capacitor Block (MVAR)	Harmonic Resonant Number Without Addition of Detuning Reactor	Detuning Reactor (H)	Harmoning Resonant Number With Detuning Reactor
147	PESH.IND T-3	11	40	3.6	9	0.00395	4
148	PESHCANT T-1	11	40	2.4	10	0.003152	6
149	PESHCANT T-2	11	40	3.6	9	0.00395	4
150	PESHCANT T-3	11	26	2.4	9	0.000405	8
151	PESHCANT T-4	11	26	2.4	9	0.000405	8
152	PESHFORT T-1	11	40	2.4	11	0.003152	6
153	PESHFORT T-2	11	40	2.4	11	0.003152	6
154	PEZU T-1	11	26	2.4	8	0.000405	8
155	PEZU T-2	11	13	1.2	9	0.000869	8
156	PPCCHARS T-1	11	13	1.2	9	0.000869	8
157	RAJJAR T-1	11	26	1.2	12	0.000166	12
158	RAJJAR T-2	11	26	2.4	9	0.000405	8
159	R-BABA T-1	11	40	1.2	15	0.003162	8
160	R-BABA T-2	11	40	1.2	15	0.003162	8
161	R-BABA T-3	11	40	1.2	15	0.003162	8
162	S.NURANG T-1	11	26	3.6	7	0.000743	6
163	S.NURANG T-2	11	13	1.2	9	0.000869	8
164	S.NURANG T-3	11	26	3.6	7	0.000743	6
165	SADIRABAD T1	11	13	2.4	6	0.000222	6
166	SAKHI-CH T-1	11	26	1.2	12	0.000166	12
167	SAKHI-CH T-2	11	26	1.2	12	0.000166	12
168	SAKHI-CH T-3	11	26	2.4	9	0.000405	8
169	SHABQDAR T-1	11	40	2.4	11	0.003152	6
170	SHABQDAR T-2	11	26	2.4	9	0.000405	8
171	SHABQDAR T-3	11	26	2.4	9	0.000405	8
172	SHAHIBAGH T-1	11	40	2.4	11	0.003152	6
173	SHAHIBAGH T-2	11	40	2.4	11	0.003152	6
174	SHAHIBAGH T-3	11	40	2.4	11	0.003152	6
175	SHAIBG-N T-1	11	13	1.2	9	0.000869	8
176	SHAIBG-N T-2	11	13	1.2	9	0.000869	8
177	SHANGLAP T-1	11	7.5	1.2	7	0.00348	6
178	SHMUHDI-2 T-1	11	13	1.2	9	0.000869	8
179	SHMUHDI-2 T-2	11	13	1.2	9	0.000869	8
180	SIRAJBABA T1	11	13	1.2	9	0.000869	8
181	SIRAJBABA T2	11	13	1.2	9	0.000869	8
182	SWABI T-1	11	40	4.8	7	0.003678	4
183	SWABI T-2	11	40	2.4	10	0.003152	6
184	SWABI T-3	11	40	2.4	10	0.003152	6
185	SWAT T-1	11	40	4.8	7	0.003678	4
186	SWAT T-2	11	40	3.6	8	0.00395	4
187	SWAT T-3	11	26	2.4	8	0.000405	8
188	SWAT T-5	11	26	4.8	6	0.00001	6
189	TAJAZAI T-1	11	26	3.6	7	0.000743	6
190	TAJAZAI T-1	11	15	2.4	5	0.00404	4
191	TAJAZAI T-2	11	26	1.2	12	0.000166	12
192	TAJAZAI T-2	11	13	2.4	6	0.000222	6
193	TALL T-1	11	26	3.6	6	0.000743	6
194	TALL T-2	11	26	3.6	6	0.000743	6
195	TANGI T-1	11	40	2.4	10	0.003152	6
196	TANGI T-2	11	26	3.6	7	0.000743	6

Harmonic Resonance Analysis with/without Detuning Reactors							
Sr. No.	Bus Name	Base kv	Rate A (MVA)	Capacitor Block (MVAR)	Harmonic Resonant Number Without Addition of Detuning Reactor	Detuning Reactor (H)	Harmoning Resonant Number With Detuning Reactor
197	TANGI T-3	11	26	2.4	9	0.000405	8
198	TANK T-1	11	13	2.4	6	0.000222	6
199	TANK T-2	11	26	2.4	8	0.000405	8
200	TANK T-3	11	26	2.4	8	0.000405	8
201	TARBELA-N T-1	11	15	1.2	12	0.000783	10
202	TARBELA-N T-2	11	13	1.2	9	0.000869	8
203	TARBLA-R T-1	11	26	2.4	9	0.000405	8
204	TARBLA-R T-2	11	13	1.2	9	0.000869	8
205	TARBLA-R T-3	11	26	2.4	9	0.000405	8
206	TIMRGARH T-2	11	13	1.2	9	0.000869	8
207	WARAI T-1	11	13	2.4	6	0.000222	6
208	WARSAK T-1	11	26	1.2	12	0.000166	12
209	WARSAK T-2	11	26	1.2	12	0.000166	12
210	WARSAK T-3	11	26	2.4	9	0.000405	8

Reactive Power Compensation Study of PESCO

Summary of Recommended Sizes of Detuning Reactors

Sr. No.	Transformer Rating (MVA)	Capacitor Block (MVAR)	Detuning Reactor (mH)
1	40	1.2	3.162
2	40	2.4	3.152
3	40	3.6	3.95
4	40	4.8	3.678
5	40	6	3
6	26	1.2	0.166
7	26	2.4	0.405
8	26	3.6	0.743
9	26	4.8	0.01
10	26	6	1.78
11	15	1.2	0.783
12	15	2.4	4.04
13	13	1.2	0.869
14	13	2.4	0.222
15	13	3.6	2.4
16	13	4.8	1.01
17	10	1.2	0.338
18	7.5	1.2	3.48
19	7.5	2.4	4.85
20	6.3	1.2	3
21	6.3	2.4	2.7
22	4	1.2	8.8

Appendix G

Dynamic Reactive Power Compensation (DRC)

G-1: Voltage Stability Results without additional SVC

G-2: Voltage Stability Results with Recommended SVC at Shahibagh (250 MVAR)

G-3: Voltage Stability Results with Recommended SVCs at Shahibagh & Kohat (250 MVAR Each)

G-4: Voltage Stability Results with Recommended SVCs at Shahibagh, Kohat and Peshawar University (250 MVAR Each)

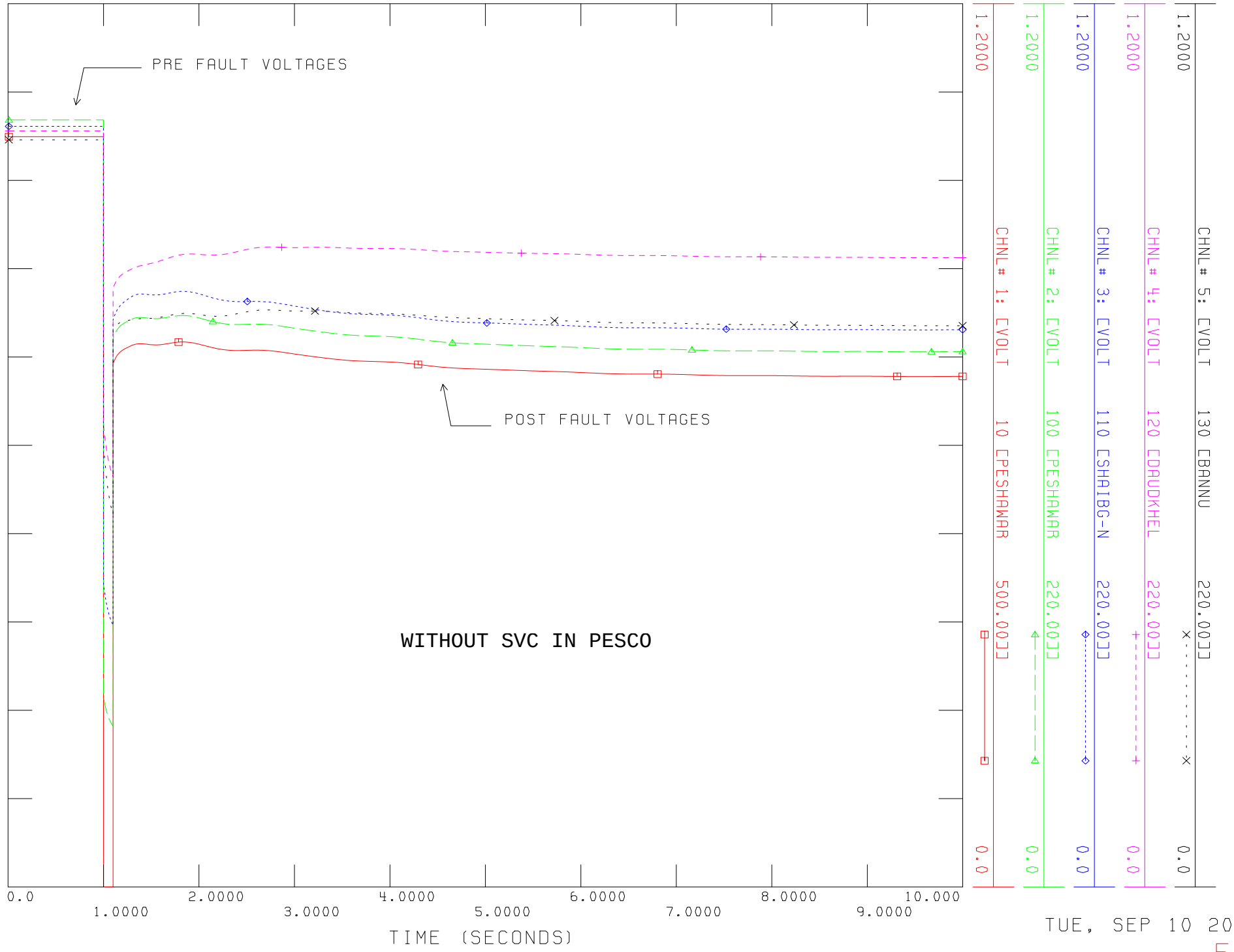
REACTIVE POWER COMPENSATION STUDY OF PESCO SYSTEM
PEAK LOAD JUNE, 2015
THREE PHASE FAULT AT PESHAWAR 500 KV, CLEARED IN 5 CYCLES
TRIP TARBELA-PESHAWAR 500 KV SINGLE CIRCUIT
FILE: Z:\RPC study for PESCO\STAB\Without-SVC-Flt-Pesh-Tarbela-500kV.out
SIEMENS POWER TECHNOLOGIES INTERNATIONAL
CHNL# 5: [VOLT 130 [BANNU 220.0000]
CHNL# 4: [VOLT 120 [DAUDKHEL 220.0000]
CHNL# 3: [VOLT 110 [SHAIBG-N 220.0000]
CHNL# 2: [VOLT 100 [PESHAWAR 220.0000]
CHNL# 1: [VOLT 10 [PESHAWAR 500.0000]
1.2000
0.0
PRE FAULT VOLTAGES
POST FAULT VOLTAGES
WITHOUT SVC IN PESCO
0.0
1.0000
2.0000
3.0000
4.0000
5.0000
6.0000
7.0000
8.0000
9.0000
10.000
TIME (SECONDS)
TUE, SEP 10 2013 12:20

FIG: 1.1

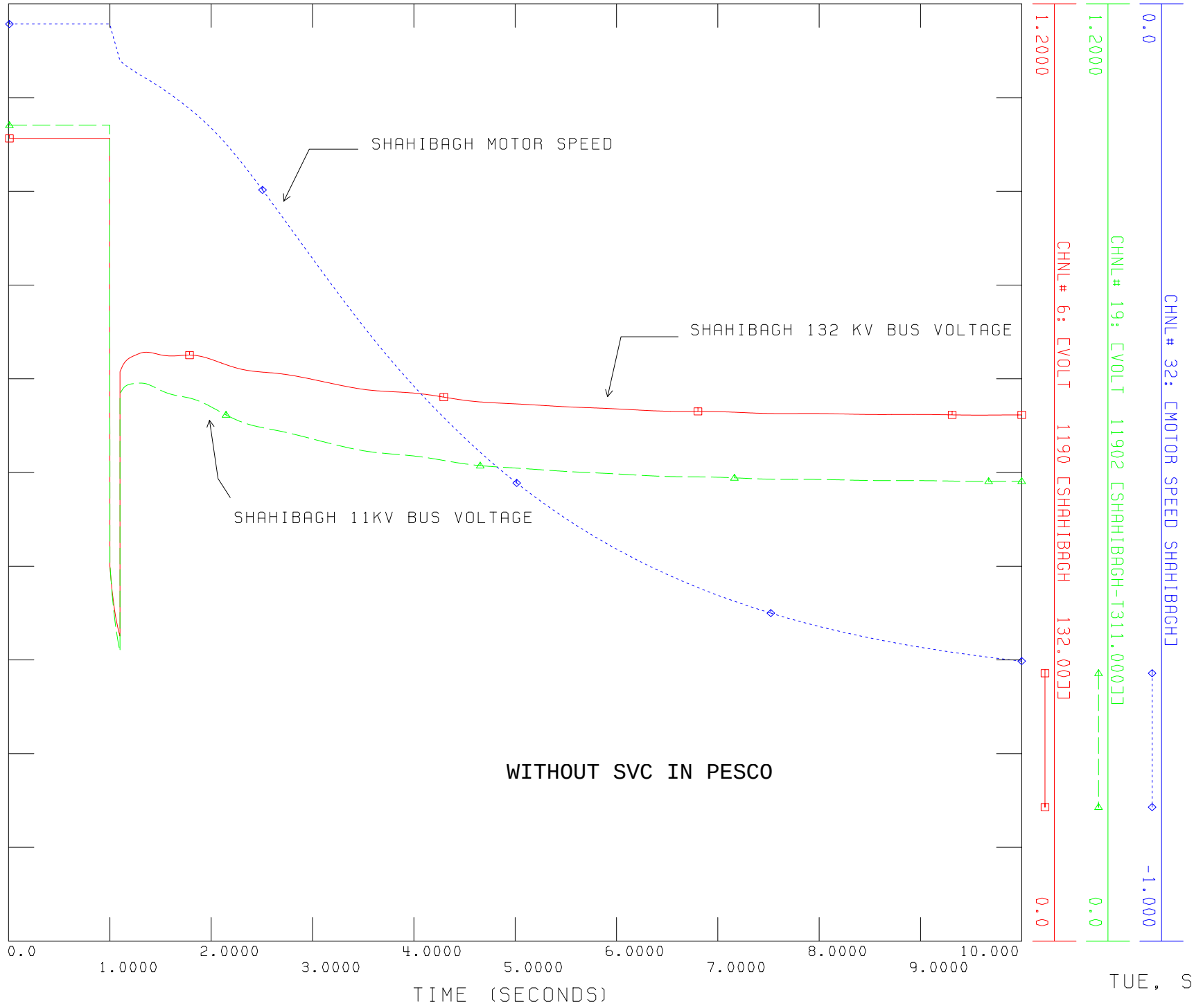
SIEMENS POWER TECHNOLOGIES INTERNATIONAL
REACTIVE POWER COMPENSATION STUDY OF PESCO SYSTEM
PEAK LOAD JUNE, 2015
THREE PHASE FAULT AT PESHAWAR 500 KV, CLEARED IN 5 CYCLES
TRIP TARBELA-PESHAWAR 500 KV SINGLE CIRCUIT
FILE: Z:\RPC study for PESCO\STAB\Without-SVC-Flt-Pesh-Tarbela-500kV.out
CHNL# 32: [MOTOR SPEED SHAHIBAGH]
0.0
-1.000
CHNL# 19: [VOLT 11902 [SHAHIBAGH-T311.000]]
1.2000
0.0
CHNL# 6: [VOLT 1190 [SHAHIBAGH 132.00]]
1.2000
0.0
SHAHIBAGH MOTOR SPEED
SHAHIBAGH 132 KV BUS VOLTAGE
SHAHIBAGH 11KV BUS VOLTAGE
WITHOUT SVC IN PESCO
0.0
1.0000
2.0000
3.0000
4.0000
5.0000
6.0000
7.0000
8.0000
9.0000
10.000
TIME (SECONDS)
TUE, SEP 10 2013 12:27

FIG: 1.2

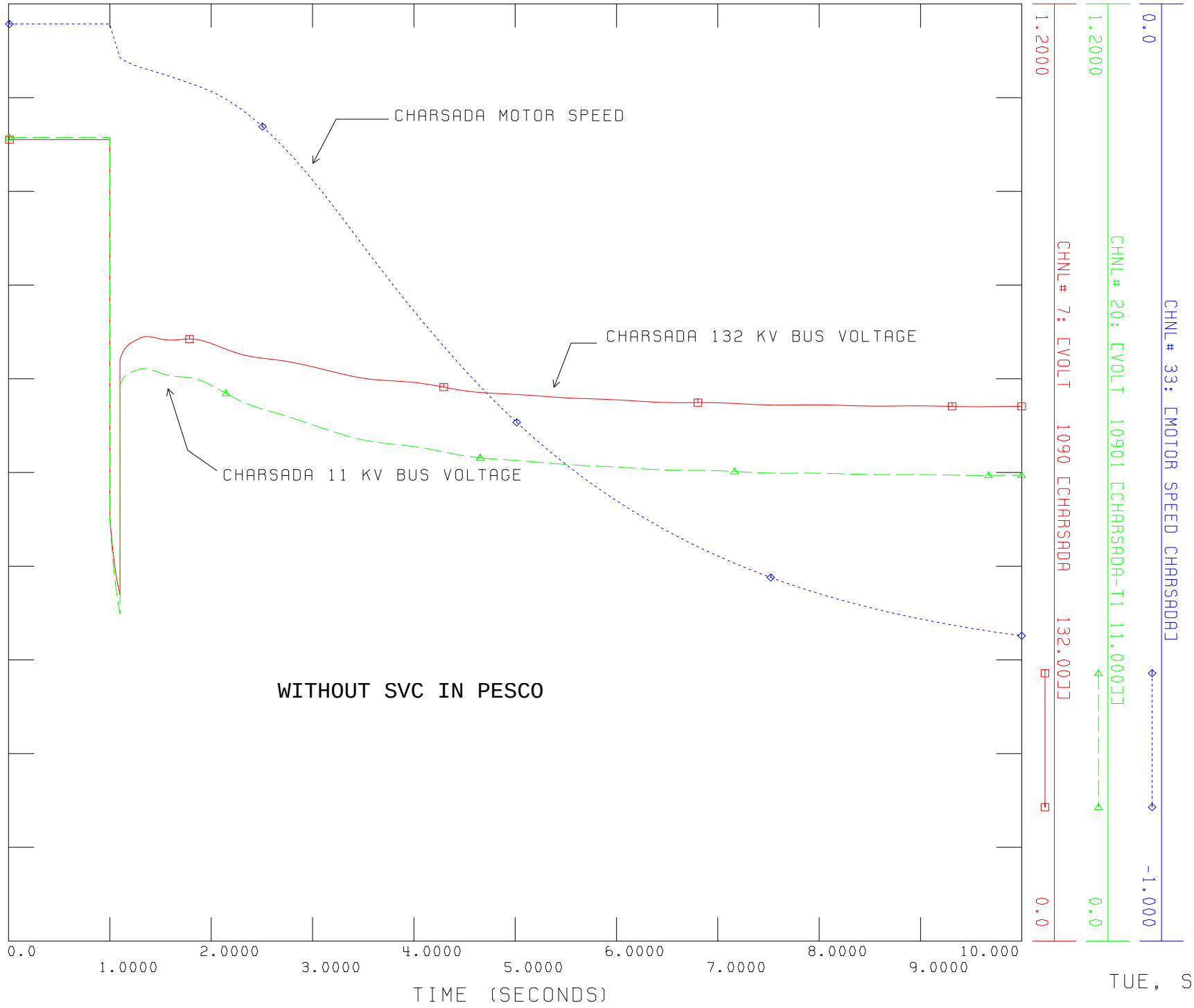

TUE, SEP 10 2013 12:36

FIG: 1.3

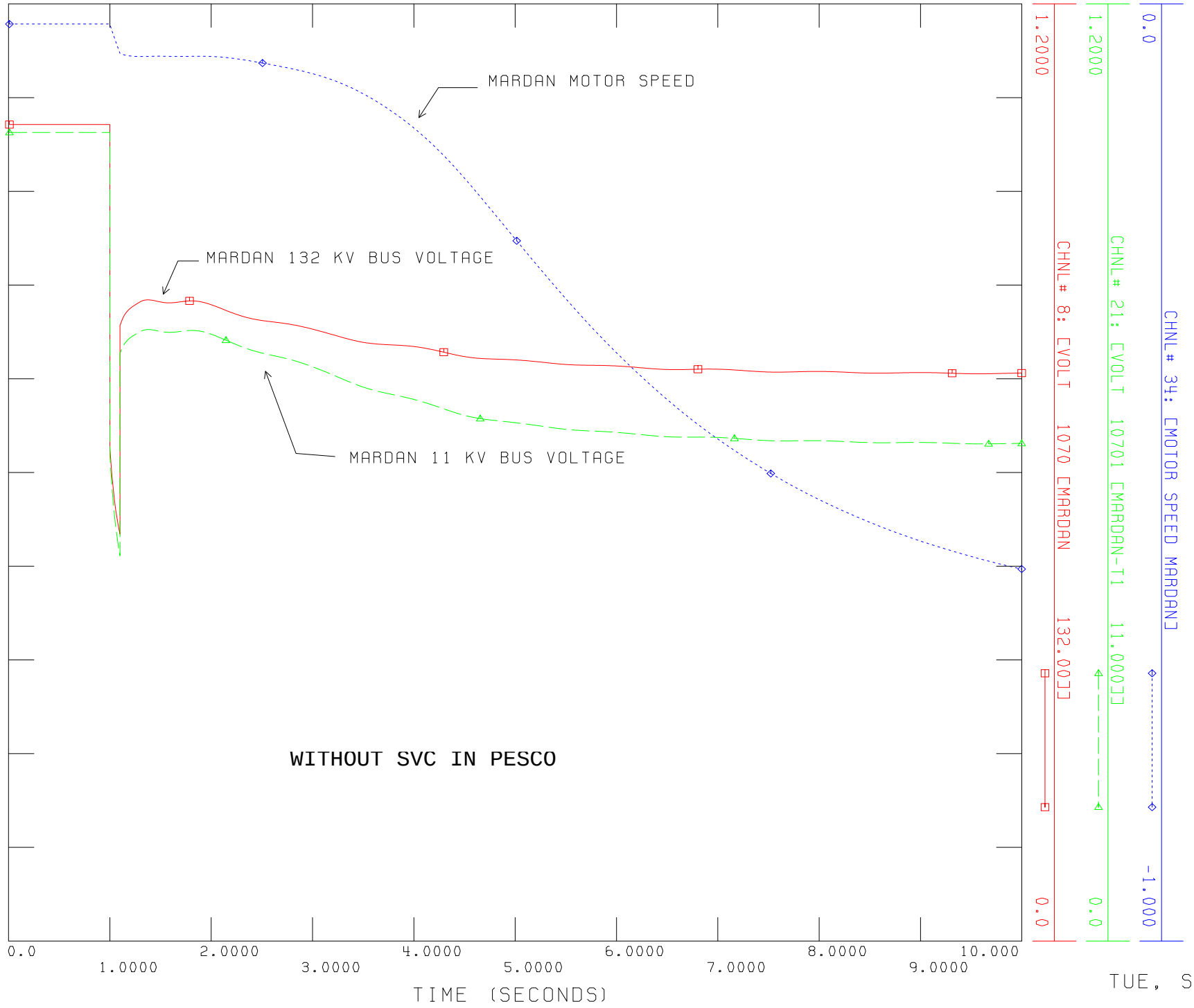
REACTIVE POWER COMPENSATION STUDY OF PESCO SYSTEM
PEAK LOAD JUNE, 2015
THREE PHASE FAULT AT PESHAWAR 500 KV, CLEARED IN 5 CYCLES
TRIP TARBELA-PESHAWAR 500 KV SINGLE CIRCUIT
FILE: Z:\RPC study for PESCO\STAB\Without-SVC-Flt-Pesh-Tarbela-500kV.out
SIEMENS POWER TECHNOLOGIES INTERNATIONAL
CHNL# 34: [MOTOR SPEED MARDAN]
0.0
-1.000
CHNL# 21: [VOLT 10701 [MARDAN-T1 11.000]]
1.2000
0.0
CHNL# 8: [VOLT 1070 [MARDAN 132.00]]
1.2000
0.0
MARDAN MOTOR SPEED
MARDAN 132 KV BUS VOLTAGE
MARDAN 11 KV BUS VOLTAGE
WITHOUT SVC IN PESCO
0.0
1.0000
2.0000
3.0000
4.0000
5.0000
6.0000
7.0000
8.0000
9.0000
10.000
TIME (SECONDS)
TUE, SEP 10 2013 12:40

FIG: 1.4

REACTIVE POWER COMPENSATION STUDY OF PESCO SYSTEM
PEAK LOAD JUNE, 2015
THREE PHASE FAULT AT PESHAWAR 500 KV, CLEARED IN 5 CYCLES
TRIP TARBELA-PESHAWAR 500 KV SINGLE CIRCUIT
FILE: Z:\RPC study for PESCO\STAB\Without-SVC-Flt-Pesh-Tarbela-500kV.out

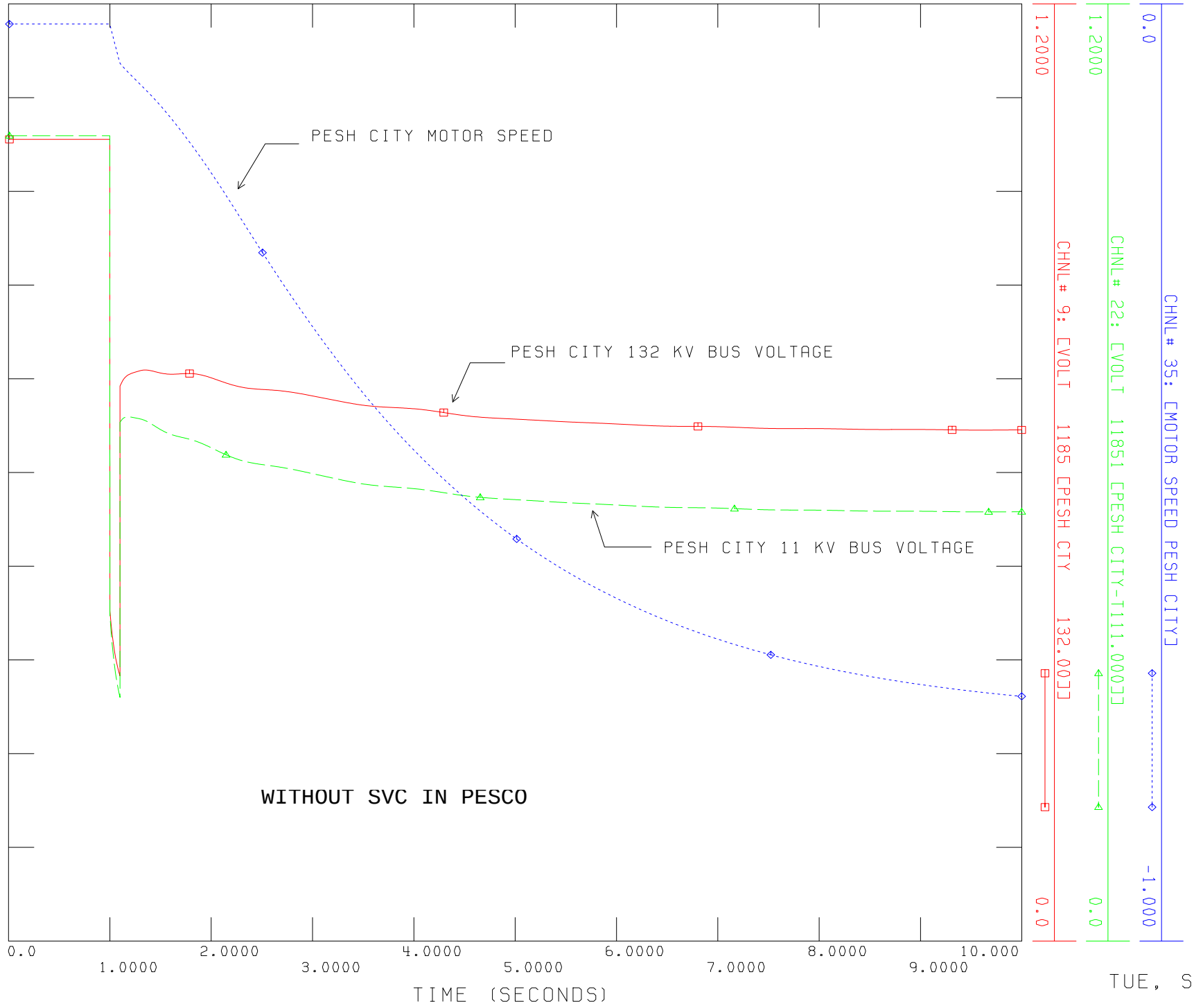

TUE, SEP 10 2013 12:48

FIG: 1.5

REACTIVE POWER COMPENSATION STUDY OF PESCO SYSTEM
PEAK LOAD JUNE, 2015
THREE PHASE FAULT AT PESHAWAR 500 KV, CLEARED IN 5 CYCLES
TRIP TARBELA-PESHAWAR 500 KV SINGLE CIRCUIT
FILE: Z:\RPC study for PESCO\STAB\Without-SVC-Flt-Pesh-Tarbela-500kV.out

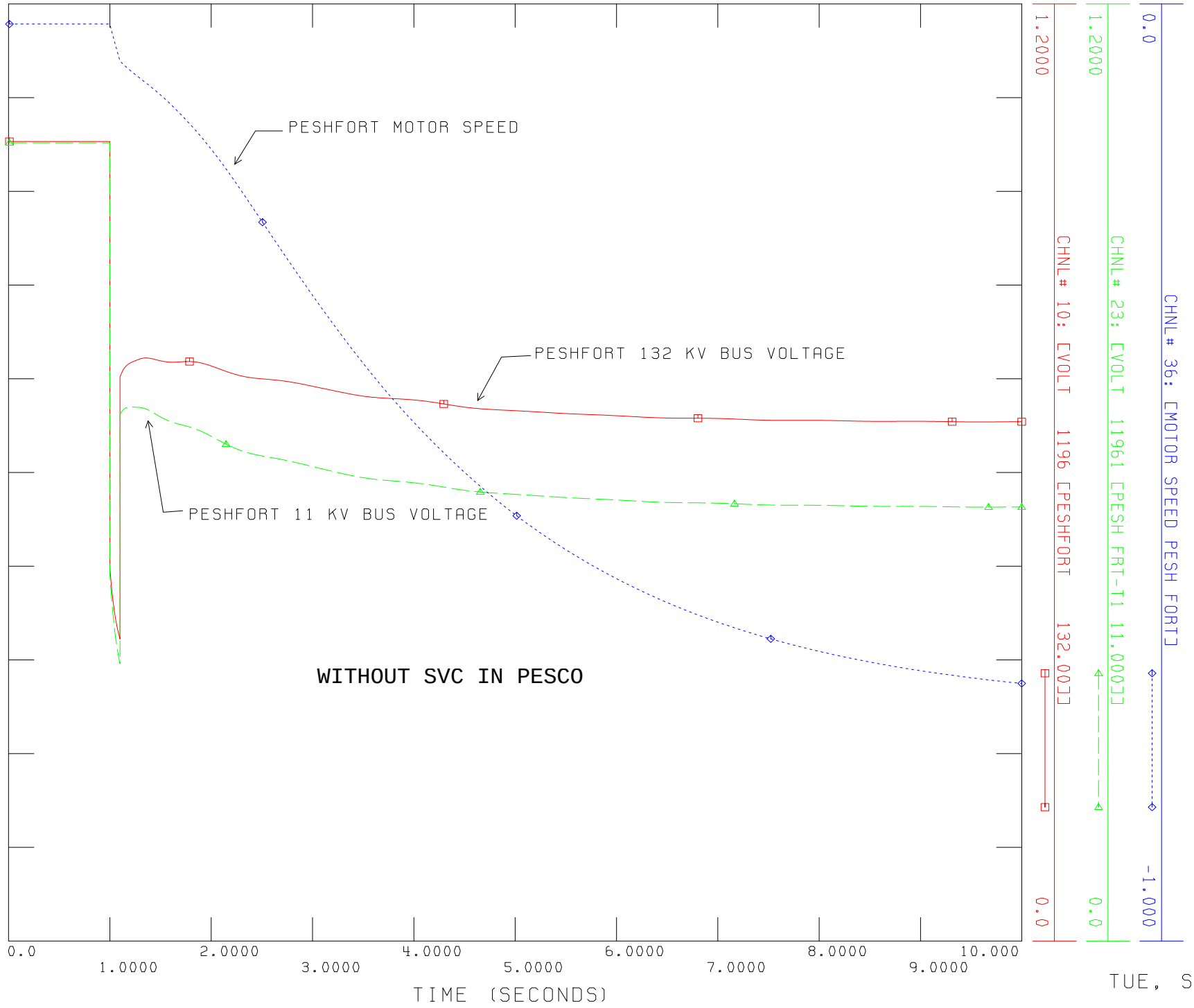

TUE, SEP 10 2013 12:52

FIG:1.6

REACTIVE POWER COMPENSATION STUDY OF PESCO SYSTEM
PEAK LOAD JUNE, 2015
THREE PHASE FAULT AT PESHAWAR 500 KV, CLEARED IN 5 CYCLES
TRIP TARBELA-PESHAWAR 500 KV SINGLE CIRCUIT
FILE: Z:\RPC study for PESCO\STAB\Without-SVC-Flt-Pesh-Tarbela-500kV.out

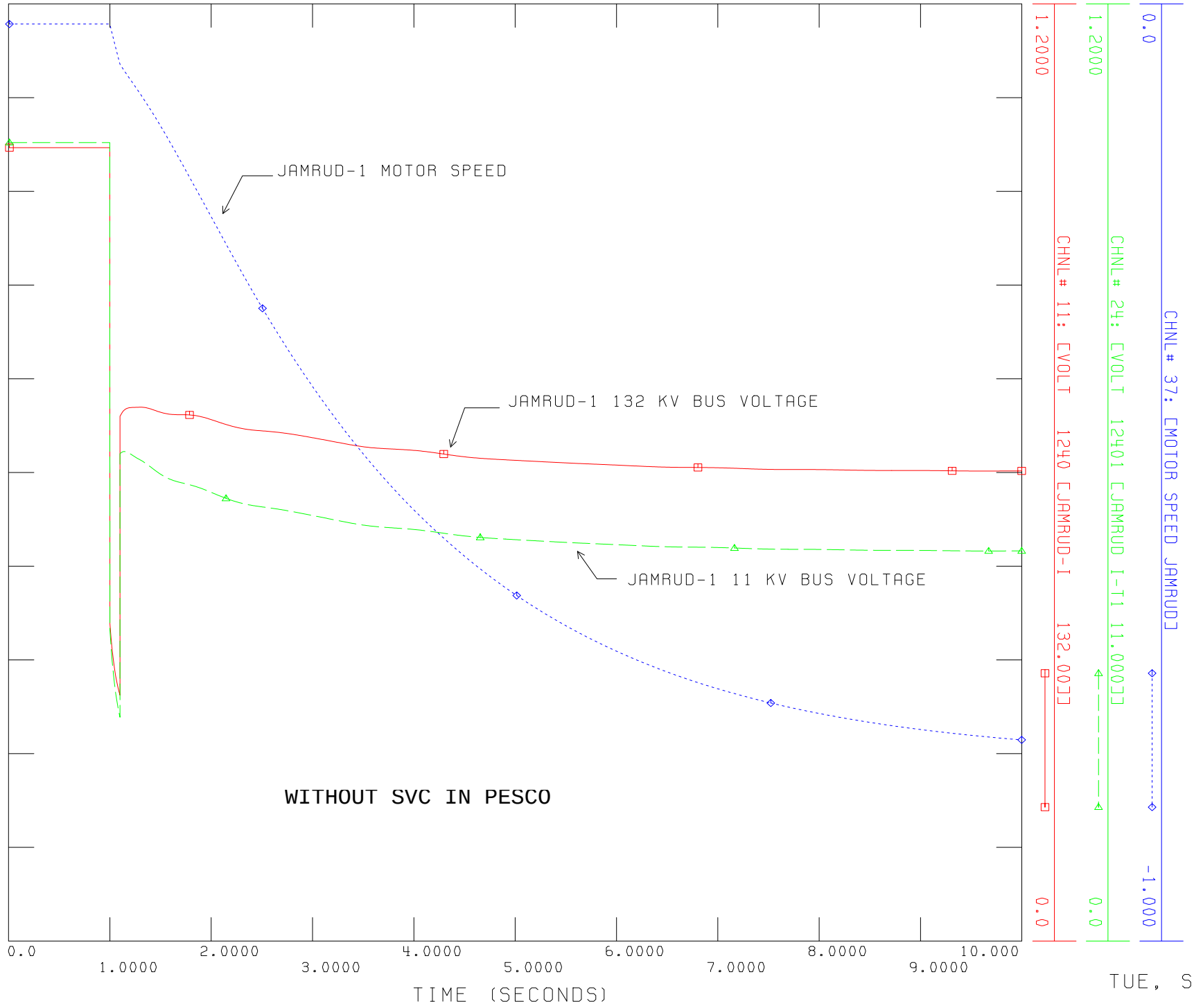

TUE, SEP 10 2013 12:56

FIG: 1.7

REACTIVE POWER COMPENSATION STUDY OF PESCO SYSTEM
PEAK LOAD JUNE, 2015
THREE PHASE FAULT AT PESHAWAR 500 KV, CLEARED IN 5 CYCLES
TRIP TARBELA-PESHAWAR 500 KV SINGLE CIRCUIT
FILE: Z:\RPC study for PESCO\STAB\Without-SVC-Flt-Pesh-Tarbela-500kV.out

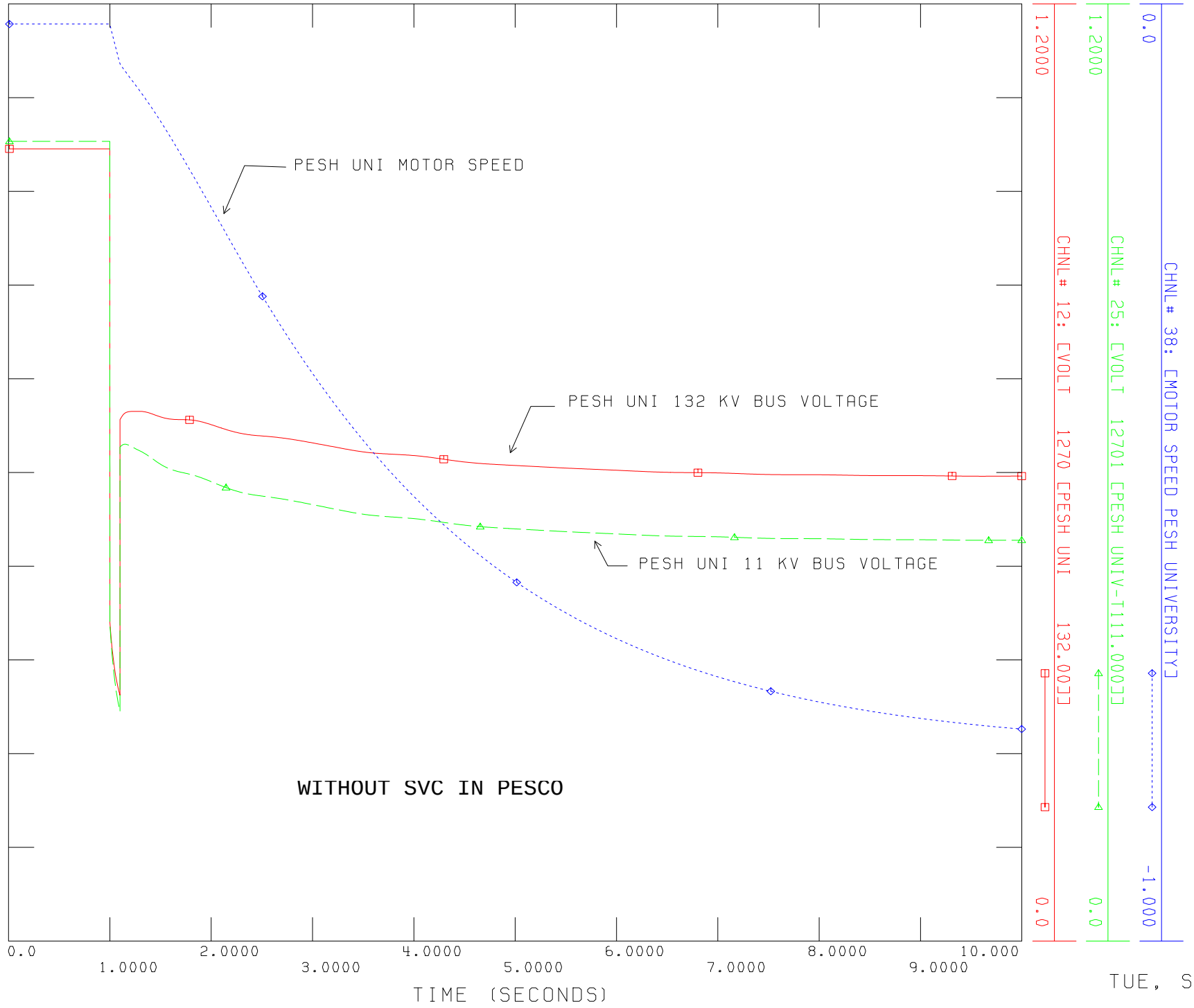

TUE, SEP 10 2013 13:00

FIG: 1.8

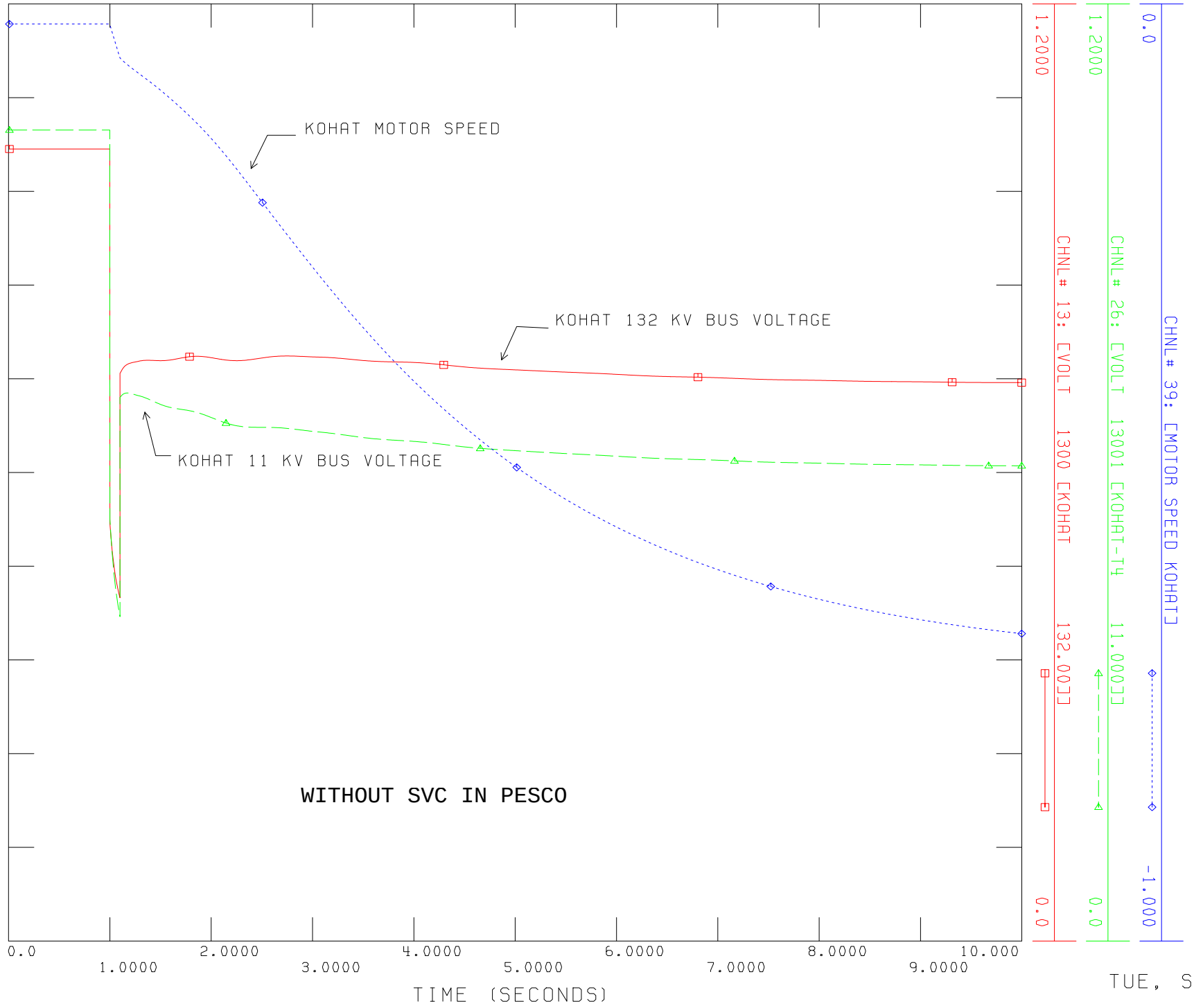

REACTIVE POWER COMPENSATION STUDY OF PESCO SYSTEM
PEAK LOAD JUNE, 2015
THREE PHASE FAULT AT PESHAWAR 500 KV, CLEARED IN 5 CYCLES
TRIP TARBELA-PESHAWAR 500 KV SINGLE CIRCUIT
FILE: Z:\RPC study for PESCO\STAB\Without-SVC-Flt-Pesh-Tarbela-500kV.out

SIEMENS POWER TECHNOLOGIES INTERNATIONAL

TUE, SEP 10 2013 13:08

FIG:1.9

REACTIVE POWER COMPENSATION STUDY OF PESCO SYSTEM
PEAK LOAD JUNE, 2015
THREE PHASE FAULT AT PESHAWAR 500 KV, CLEARED IN 5 CYCLES
TRIP TARBELA-PESHAWAR 500 KV SINGLE CIRCUIT
FILE: Z:\RPC study for PESCO\STAB\Without-SVC-Flt-Pesh-Tarbela-500kV.out

SIEMENS POWER TECHNOLOGIES INTERNATIONAL

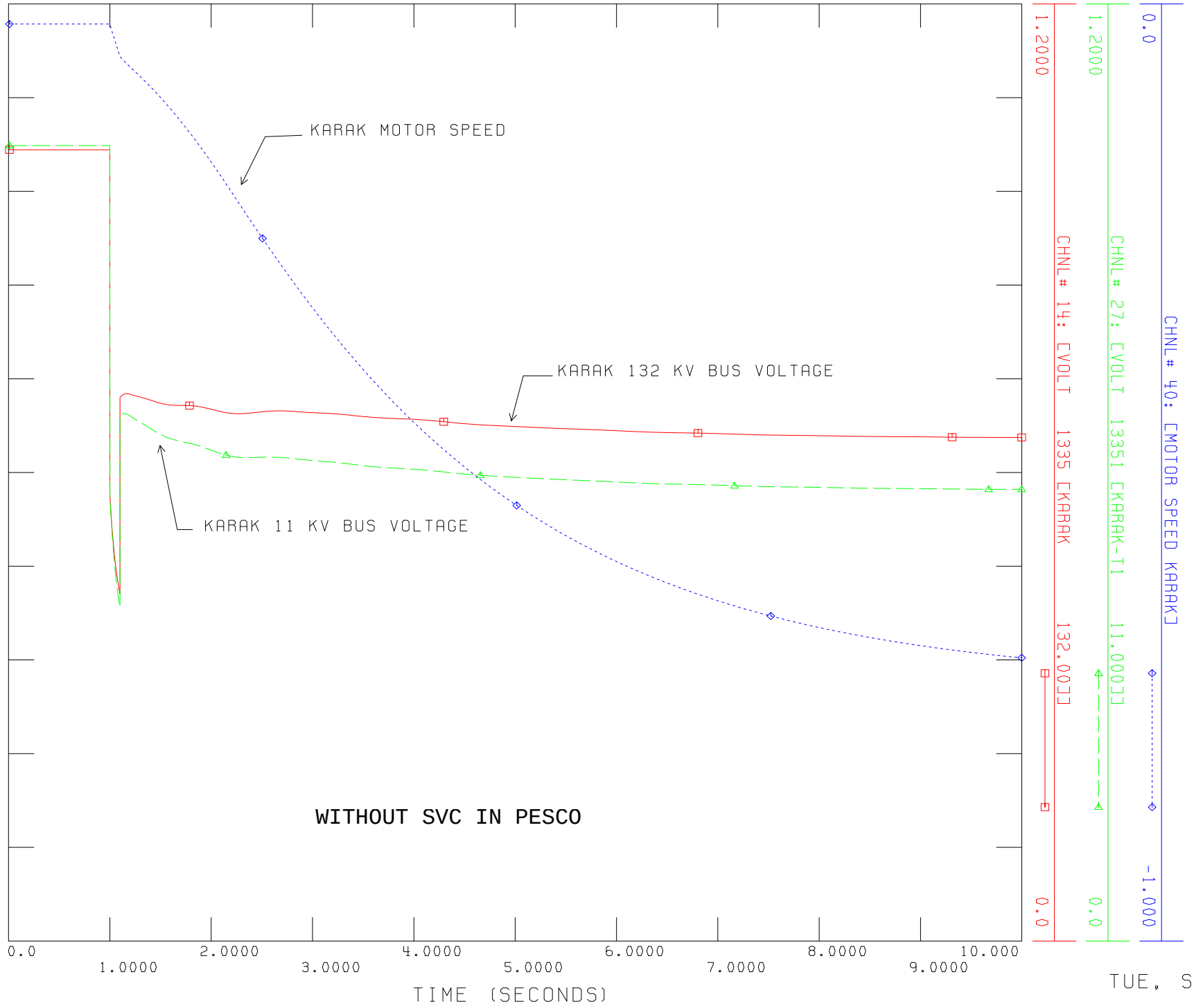

TUE, SEP 10 2013 13:11

FIG:1.10

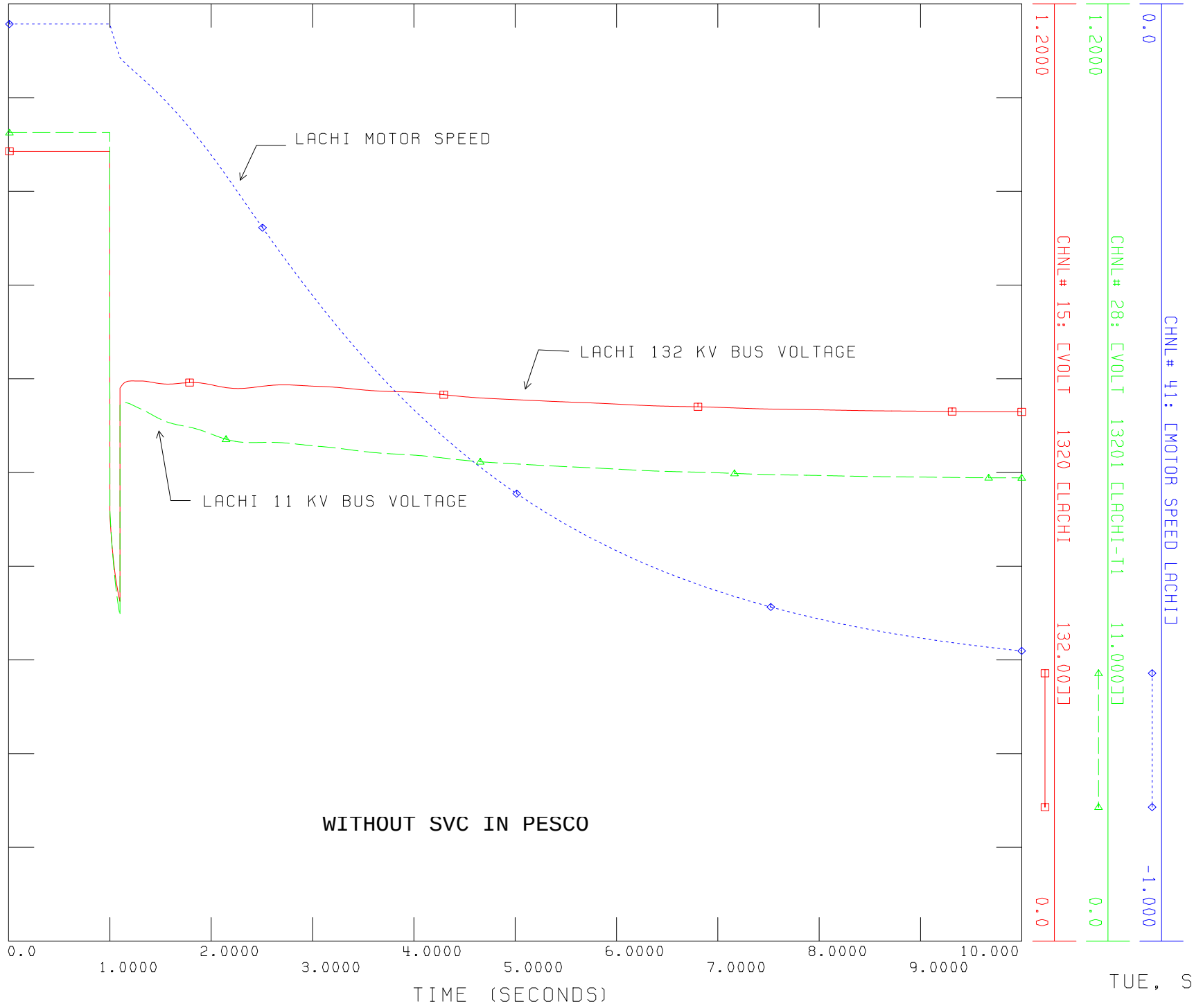

SIEMENS POWER TECHNOLOGIES INTERNATIONAL

REACTIVE POWER COMPENSATION STUDY OF PESCO SYSTEM
PEAK LOAD JUNE, 2015
THREE PHASE FAULT AT PESHAWAR 500 KV, CLEARED IN 5 CYCLES
TRIP TARBELA-PESHAWAR 500 KV SINGLE CIRCUIT
FILE: Z:\RPC study for PESCO\STAB\Without-SVC-Flt-Pesh-Tarbela-500kV.out

TUE, SEP 10 2013 13:14

FIG:1.11

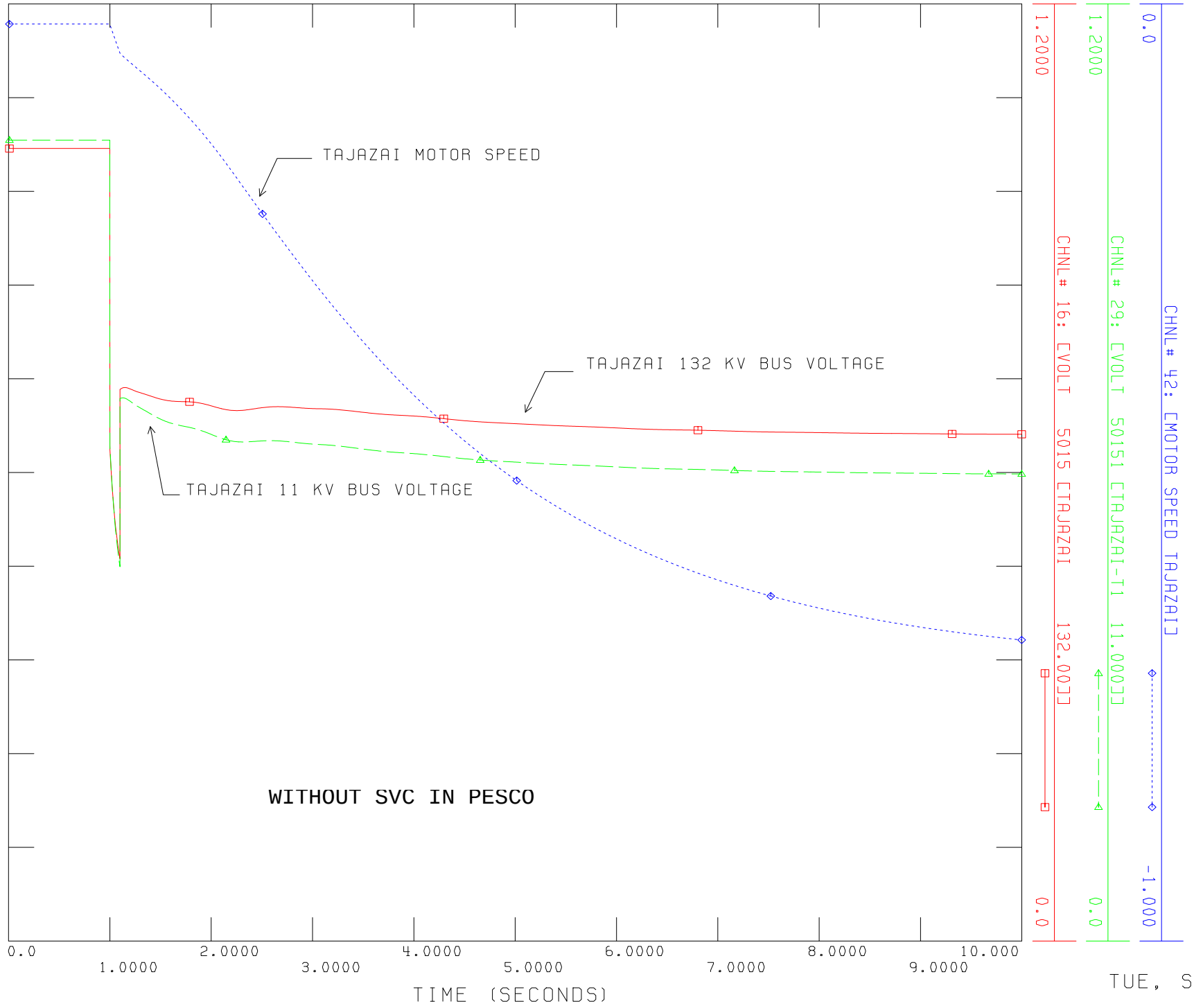
REACTIVE POWER COMPENSATION STUDY OF PESCO SYSTEM
PEAK LOAD JUNE, 2015
THREE PHASE FAULT AT PESHAWAR 500 KV, CLEARED IN 5 CYCLES
TRIP TARBELA-PESHAWAR 500 KV SINGLE CIRCUIT
FILE: Z:\RPC study for PESCO\STAB\Without-SVC-Flt-Pesh-Tarbela-500kV.out
SIEMENS POWER TECHNOLOGIES INTERNATIONAL
CHNL# 42: [MOTOR SPEED TAJAZAI]
0.0
-1.000
CHNL# 29: [VOLT 50151 [TAJAZAI-T1 11.000]]
1.2000
0.0
CHNL# 16: [VOLT 5015 [TAJAZAI 132.00]]
1.2000
0.0
TAJAZAI MOTOR SPEED
TAJAZAI 132 KV BUS VOLTAGE
TAJAZAI 11 KV BUS VOLTAGE
WITHOUT SVC IN PESCO
0.0
1.0000
2.0000
3.0000
4.0000
5.0000
6.0000
7.0000
8.0000
9.0000
10.000
TIME (SECONDS)
TUE, SEP 10 2013 13:16

FIG:1.12

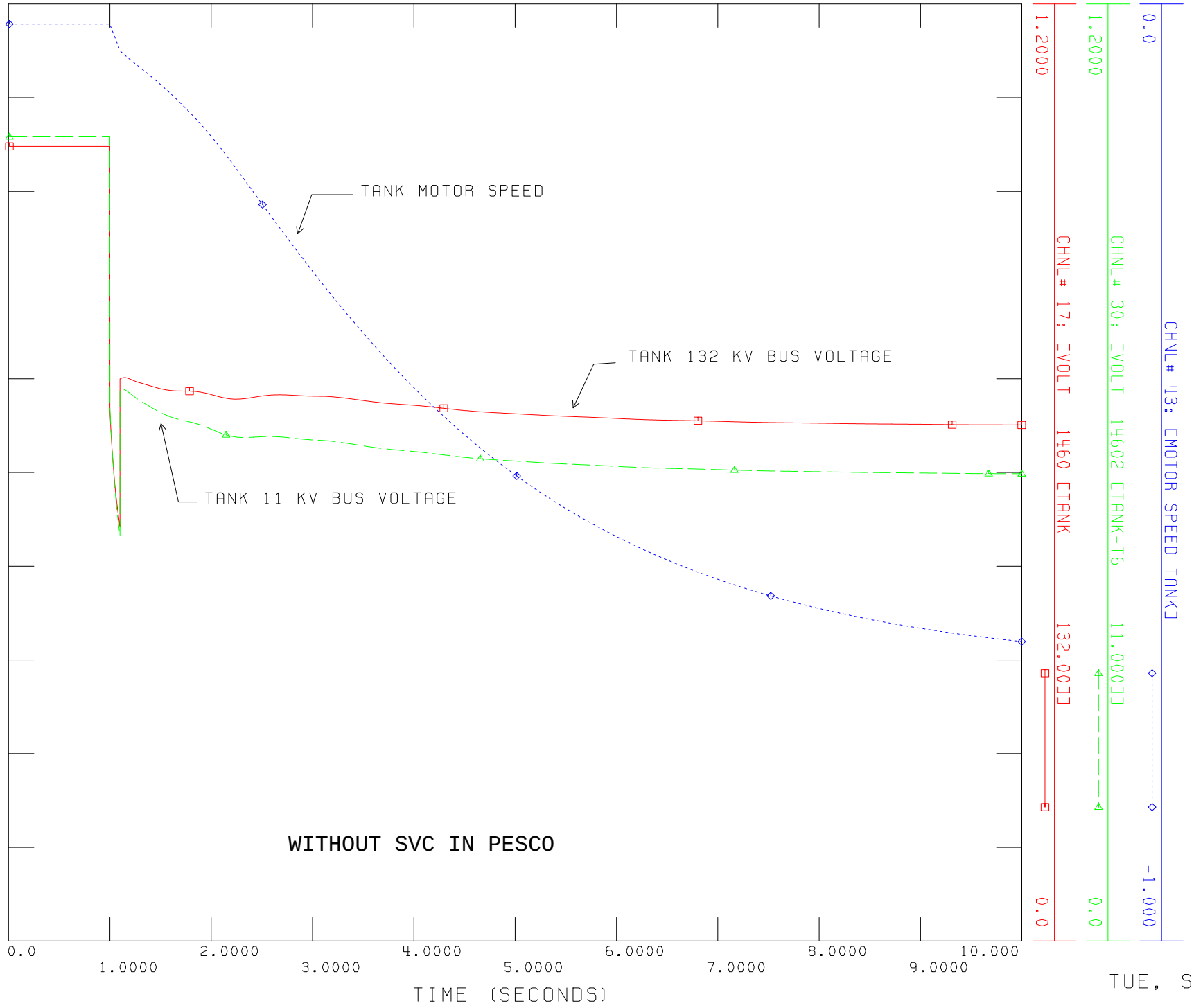
REACTIVE POWER COMPENSATION STUDY OF PESCO SYSTEM
PEAK LOAD JUNE, 2015
THREE PHASE FAULT AT PESHAWAR 500 KV, CLEARED IN 5 CYCLES
TRIP TARBELA-PESHAWAR 500 KV SINGLE CIRCUIT
FILE: Z:\RPC study for PESCO\STAB\Without-SVC-Flt-Pesh-Tarbela-500kV.out
SIEMENS POWER TECHNOLOGIES INTERNATIONAL
CHNL# 43: [MOTOR SPEED TANK]
0.0
-1.000
CHNL# 30: [VOLT 14602 [TANK-T6 11.000]]
1.2000
0.0
CHNL# 17: [VOLT 1460 [TANK 132.00]]
1.2000
0.0
TANK MOTOR SPEED
TANK 132 KV BUS VOLTAGE
TANK 11 KV BUS VOLTAGE
WITHOUT SVC IN PESCO
0.0
1.0000
2.0000
3.0000
4.0000
5.0000
6.0000
7.0000
8.0000
9.0000
10.000
TIME (SECONDS)
TUE, SEP 10 2013 13:18

FIG:1.13

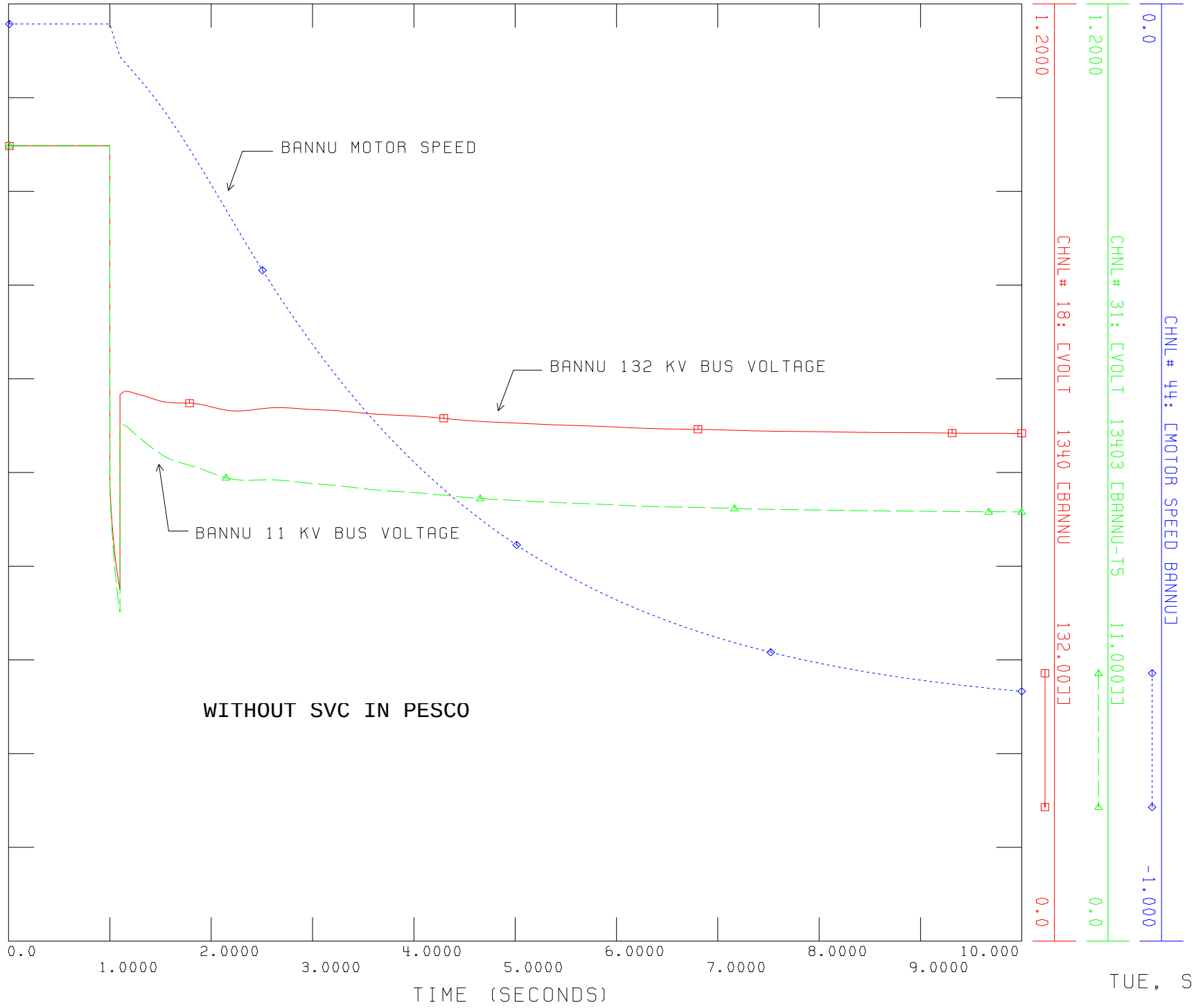

REACTIVE POWER COMPENSATION STUDY OF PESCO SYSTEM
PEAK LOAD JUNE, 2015
THREE PHASE FAULT AT PESHAWAR 500 KV, CLEARED IN 5 CYCLES
TRIP TARBELA-PESHAWAR 500 KV SINGLE CIRCUIT
FILE: Z:\RPC study for PESCO\STAB\Without-SVC-Flt-Pesh-Tarbela-500kV.out

SIEMENS POWER TECHNOLOGIES INTERNATIONAL

TUE, SEP 10 2013 13:21

FIG:1.14

REACTIVE POWER COMPENSATION STUDY OF PESCO SYSTEM
PEAK LOAD JUNE, 2015
THREE PHASE FAULT AT PESHAWAR 500 KV, CLEARED IN 5 CYCLES
TRIP TARBELA-PESHAWAR 500 KV SINGLE CIRCUIT
FILE: ...\STAB\With-SHBG-SVC-Flt-Pesh-Tarbela-500kV.out

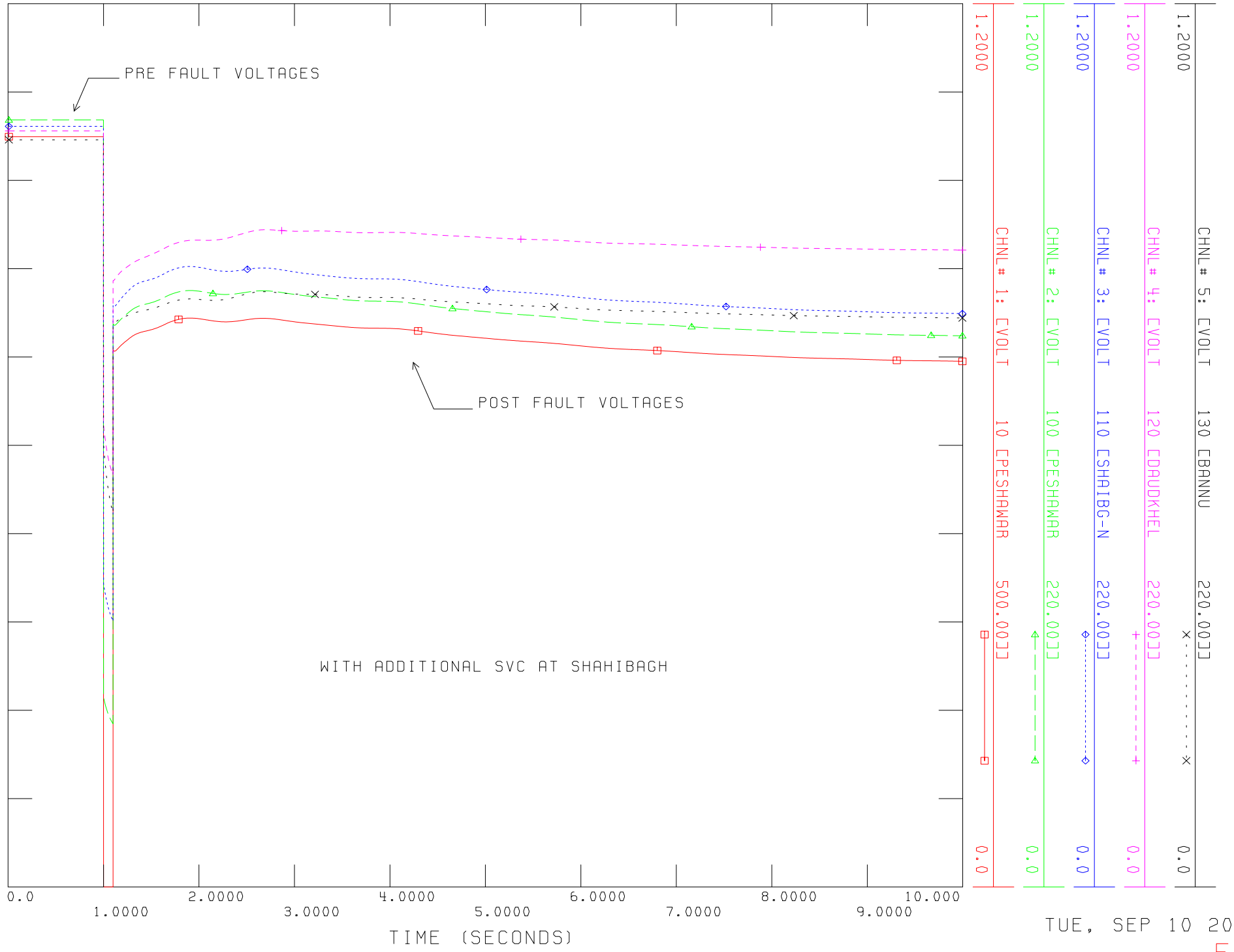

TUE, SEP 10 2013 13:30

FIG:2.1

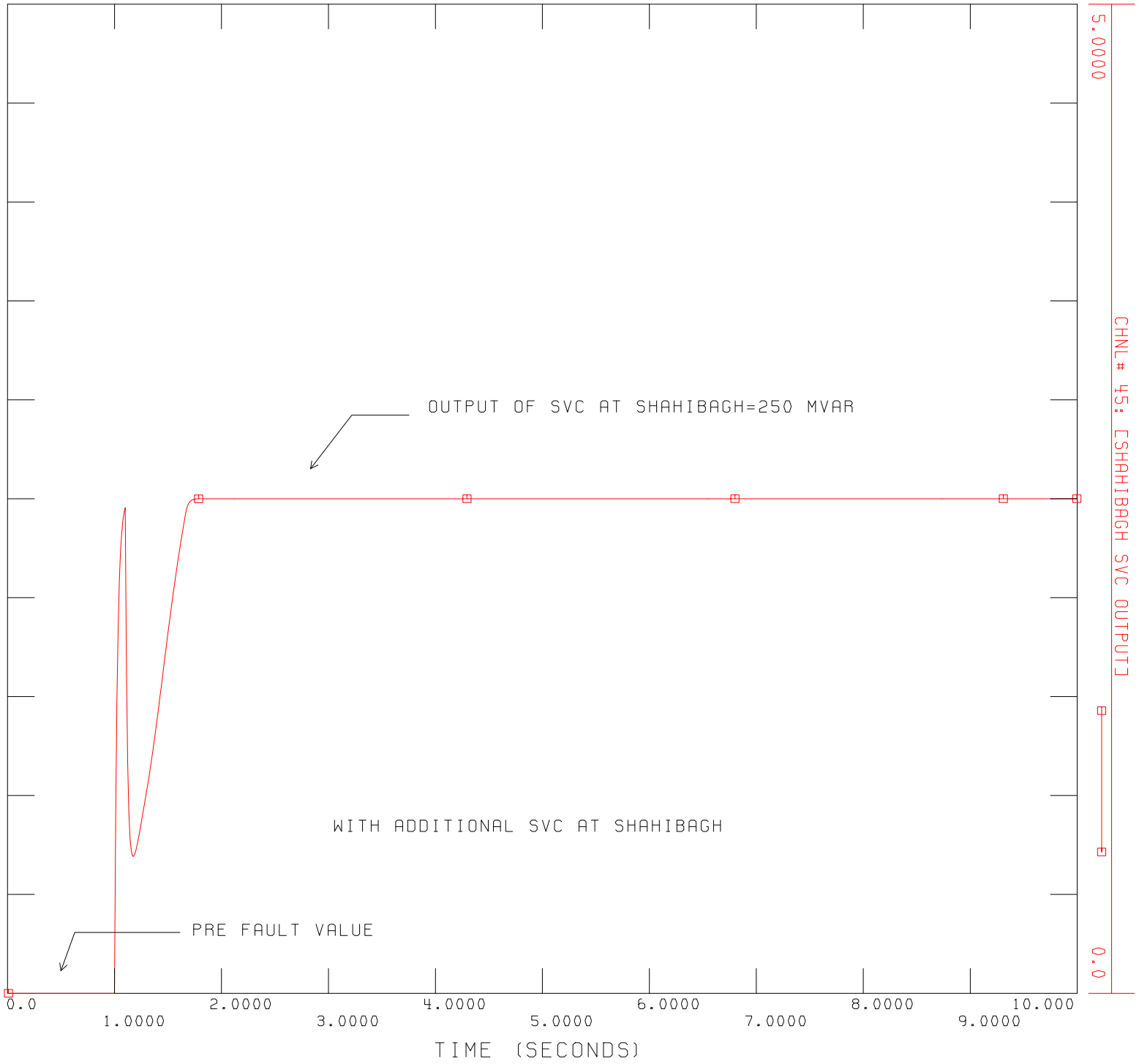

SIEMENS POWER TECHNOLOGIES INTERNATIONAL

REACTIVE POWER COMPENSATION STUDY OF PESCO SYSTEM
PEAK LOAD JUNE, 2015
THREE PHASE FAULT AT PESHAWAR 500 KV, CLEARED IN 5 CYCLES
TRIP TARBELA-PESHAWAR 500 KV SINGLE CIRCUIT
FILE: ...\STAB\With-SHBG-SVC-Flt-Pesh-Tarbela-500kV.out

TUE, SEP 10 2013 13:35

FIG:2.2

REACTIVE POWER COMPENSATION STUDY OF PESCO SYSTEM
PEAK LOAD JUNE, 2015
THREE PHASE FAULT AT PESHAWAR 500 KV, CLEARED IN 5 CYCLES
TRIP TARBELA-PESHAWAR 500 KV SINGLE CIRCUIT
FILE: ...\STAB\With-SHBG-SVC-Flt-Pesh-Tarbela-500kV.out

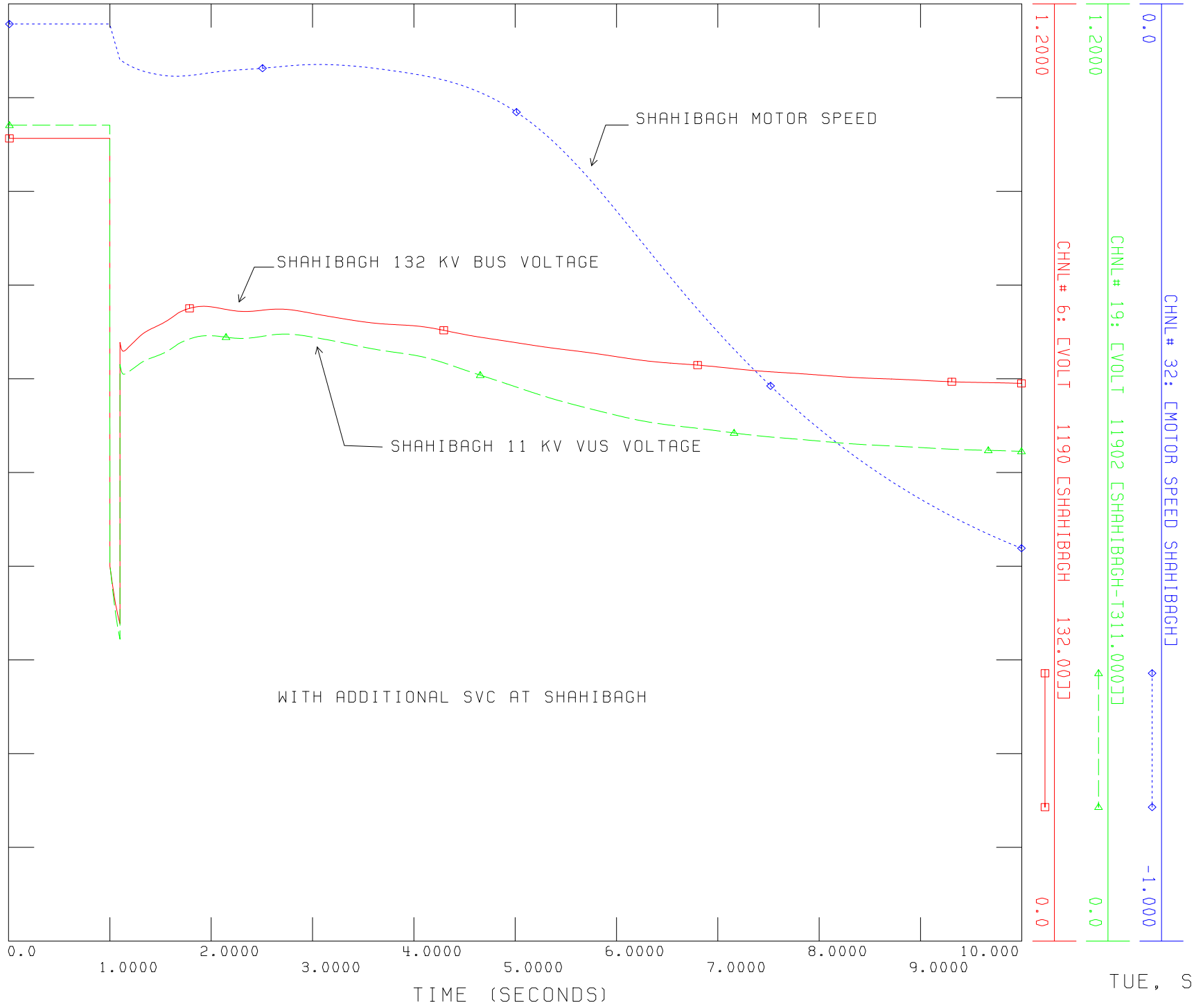

TUE, SEP 10 2013 13:42

FIG:2.3

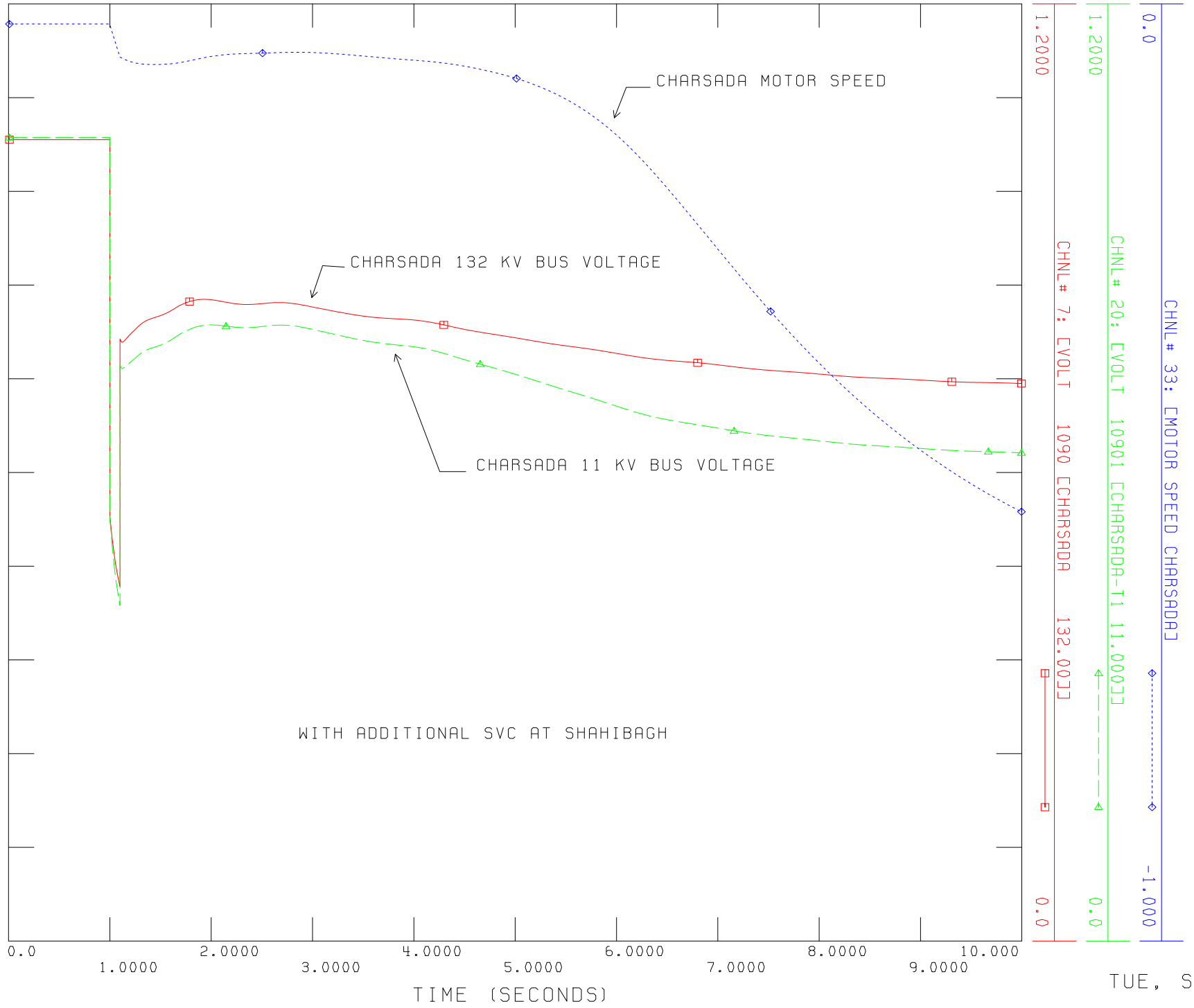

SIEMENS POWER TECHNOLOGIES INTERNATIONAL

REACTIVE POWER COMPENSATION STUDY OF PESCO SYSTEM
PEAK LOAD JUNE, 2015
THREE PHASE FAULT AT PESHAWAR 500 KV, CLEARED IN 5 CYCLES
TRIP TARBELA-PESHAWAR 500 KV SINGLE CIRCUIT
FILE: ...\STAB\With-SHBG-SVC-Flt-Pesh-Tarbela-500kV.out

TUE, SEP 10 2013 13:45

FIG:2.4

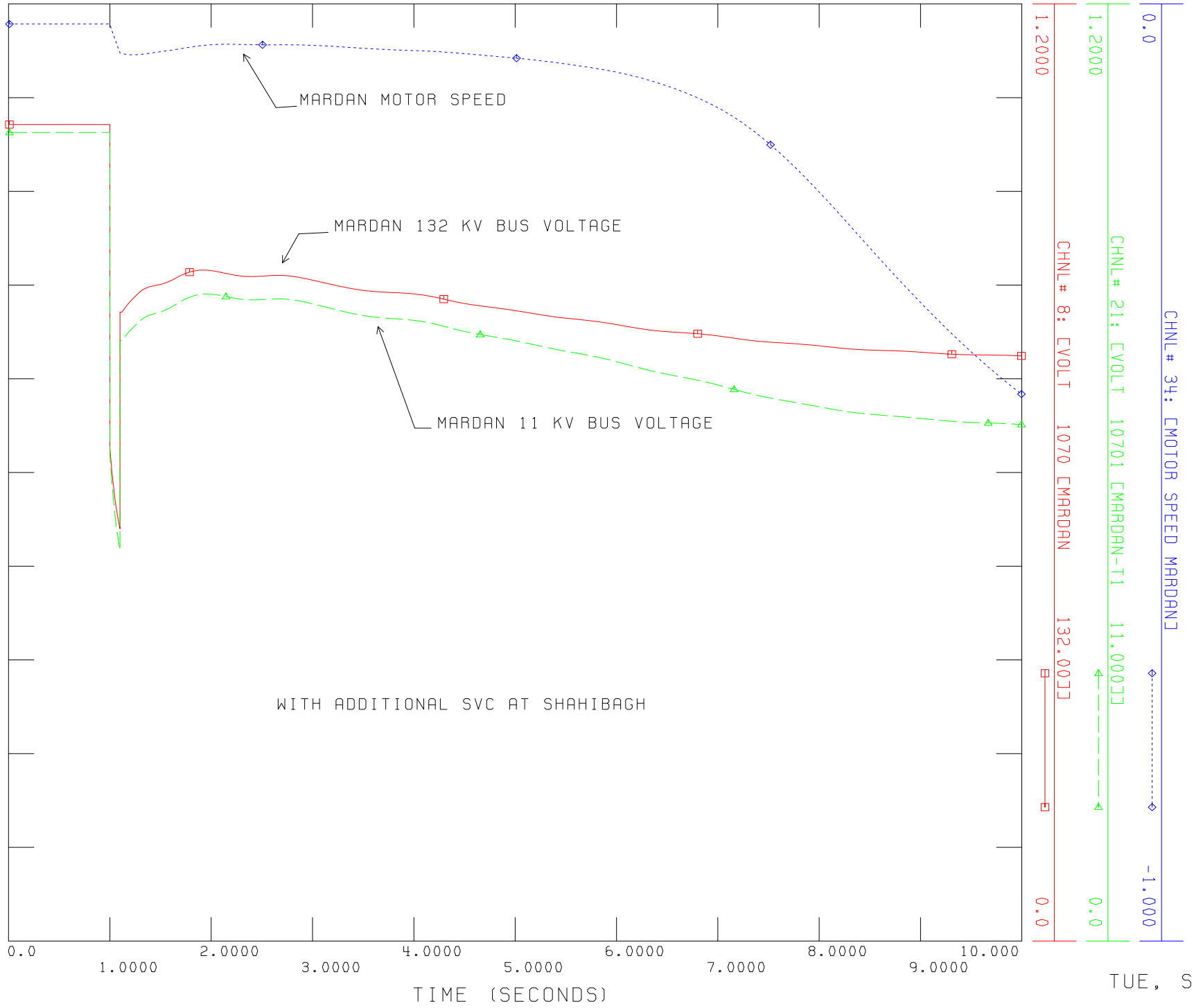
REACTIVE POWER COMPENSATION STUDY OF PESCO SYSTEM
PEAK LOAD JUNE, 2015
THREE PHASE FAULT AT PESHAWAR 500 KV, CLEARED IN 5 CYCLES
TRIP TARBELA-PESHAWAR 500 KV SINGLE CIRCUIT
FILE: ...\STAB\With-SHBG-SVC-Flt-Pesh-Tarbela-500kV.out
SIEMENS POWER TECHNOLOGIES INTERNATIONAL
CHNL# 34: [MOTOR SPEED MARDAN]
0.0
-1.000
CHNL# 21: [VOLT 10701 [MARDAN-T1 11.000]]
1.2000
0.0
CHNL# 8: [VOLT 1070 [MARDAN 132.00]]
1.2000
0.0
MARDAN MOTOR SPEED
MARDAN 132 KV BUS VOLTAGE
MARDAN 11 KV BUS VOLTAGE
WITH ADDITIONAL SVC AT SHAHIBAGH
0.0
1.0000
2.0000
3.0000
4.0000
5.0000
6.0000
7.0000
8.0000
9.0000
10.000
TIME (SECONDS)
TUE, SEP 10 2013 13:48

FIG:2.5

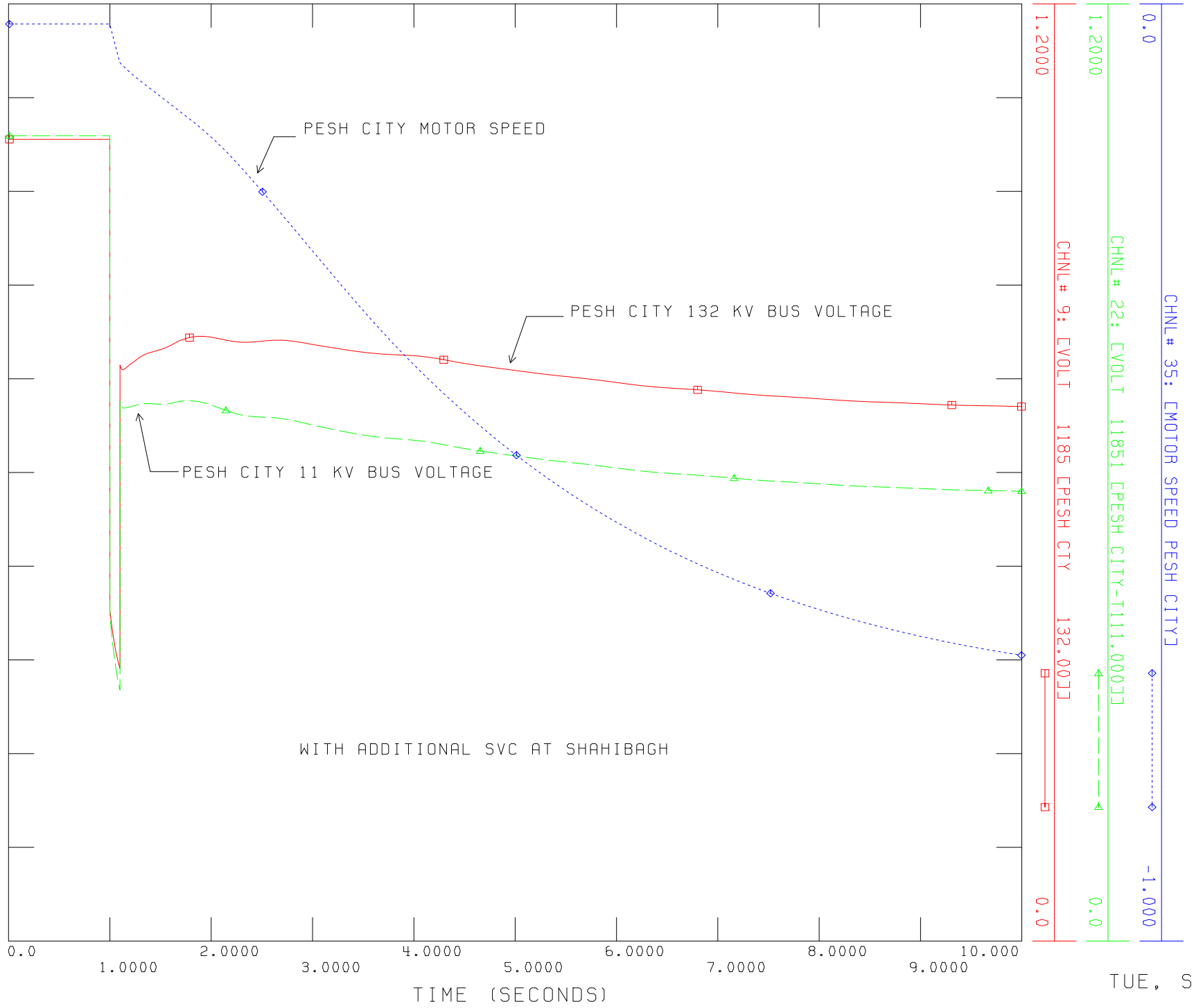

SIEMENS POWER TECHNOLOGIES INTERNATIONAL

REACTIVE POWER COMPENSATION STUDY OF PESCO SYSTEM
PEAK LOAD JUNE, 2015
THREE PHASE FAULT AT PESHAWAR 500 KV, CLEARED IN 5 CYCLES
TRIP TARBELA-PESHAWAR 500 KV SINGLE CIRCUIT
FILE: ...\STAB\With-SHBG-SVC-Flt-Pesh-Tarbela-500kV.out

TUE, SEP 10 2013 13:50

FIG:2.6

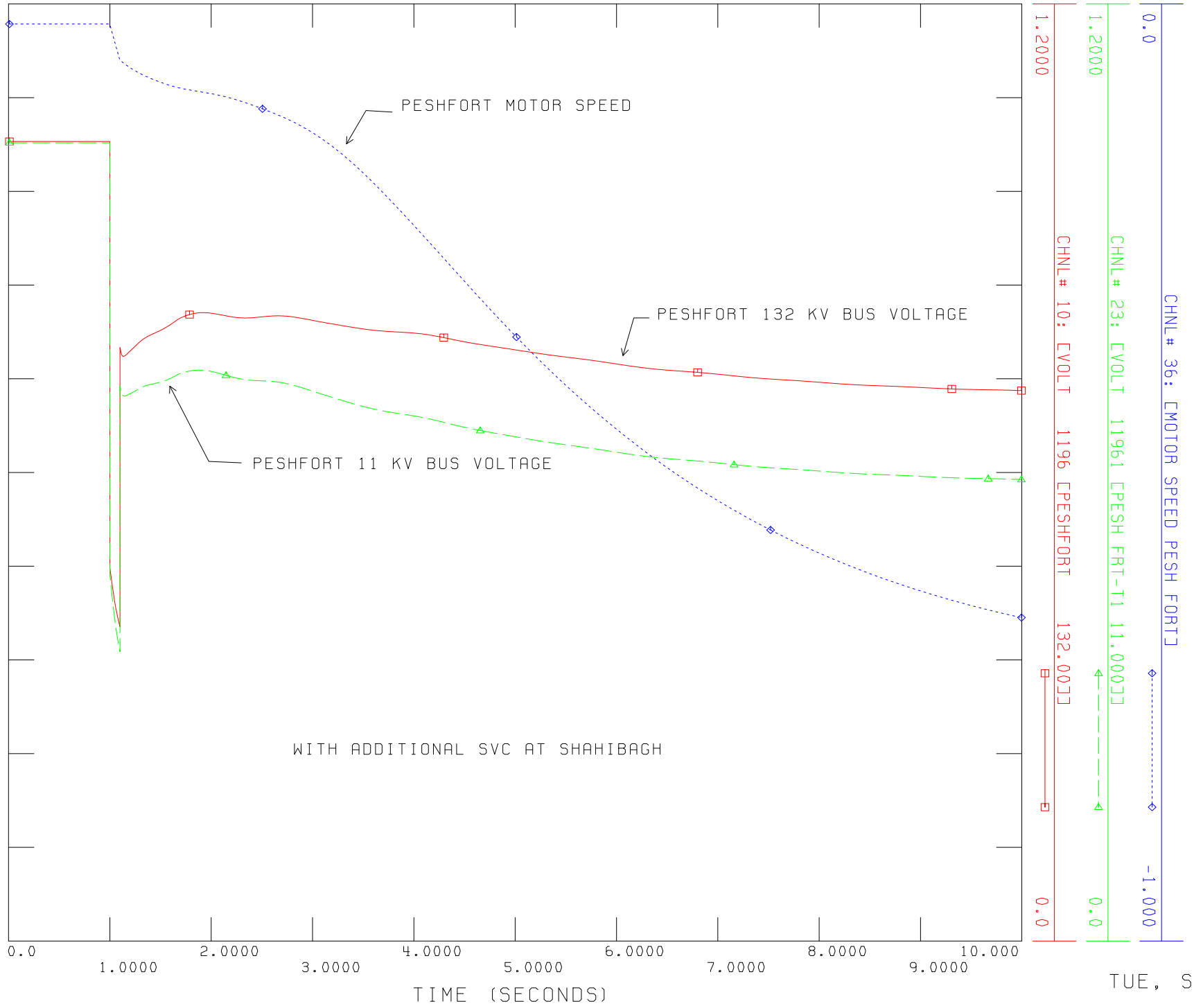
REACTIVE POWER COMPENSATION STUDY OF PESCO SYSTEM
PEAK LOAD JUNE, 2015
THREE PHASE FAULT AT PESHAWAR 500 KV, CLEARED IN 5 CYCLES
TRIP TARBELA-PESHAWAR 500 KV SINGLE CIRCUIT
FILE: ...\STAB\With-SHBG-SVC-Flt-Pesh-Tarbela-500kV.out
SIEMENS POWER TECHNOLOGIES INTERNATIONAL
CHNL# 36: [MOTOR SPEED PESH FORT]
CHNL# 23: [VOLT 11961 [PESH FRT-T1 11.000]]
CHNL# 10: [VOLT 1196 [PESHFORT 132.00]]
0.0
-1.000
1.2000
0.0
1.2000
0.0
PESHFORT MOTOR SPEED
PESHFORT 132 KV BUS VOLTAGE
PESHFORT 11 KV BUS VOLTAGE
WITH ADDITIONAL SVC AT SHAHIBAGH
0.0
1.0000
2.0000
3.0000
4.0000
5.0000
6.0000
7.0000
8.0000
9.0000
10.000
TIME (SECONDS)
TUE, SEP 10 2013 13:53

FIG:2.7

REACTIVE POWER COMPENSATION STUDY OF PESCO SYSTEM
PEAK LOAD JUNE, 2015
THREE PHASE FAULT AT PESHAWAR 500 KV, CLEARED IN 5 CYCLES
TRIP TARBELA-PESHAWAR 500 KV SINGLE CIRCUIT
FILE: ...\STAB\With-SHBG-SVC-Flt-Pesh-Tarbela-500kV.out

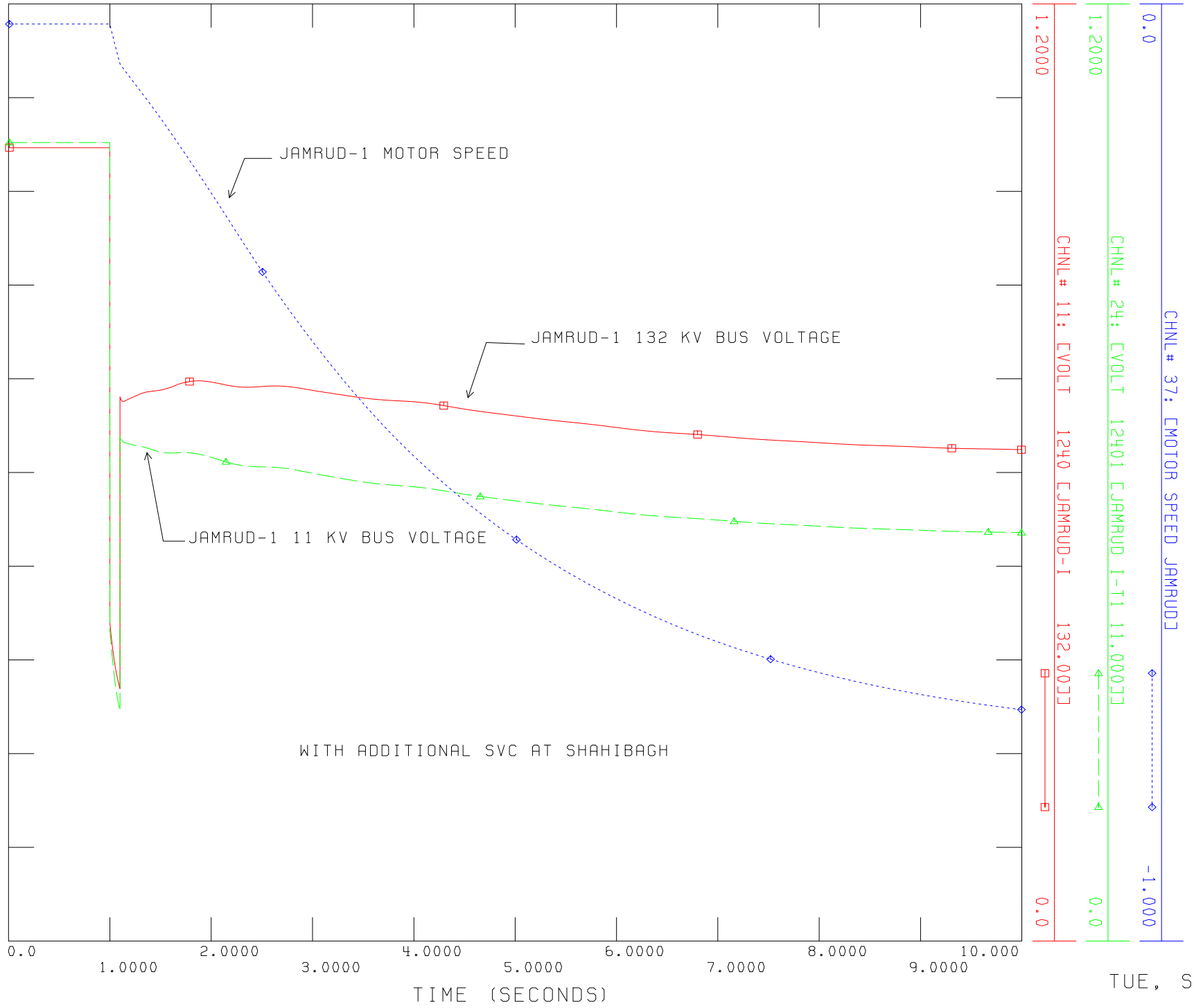

TUE, SEP 10 2013 13:55

FIG:2.8

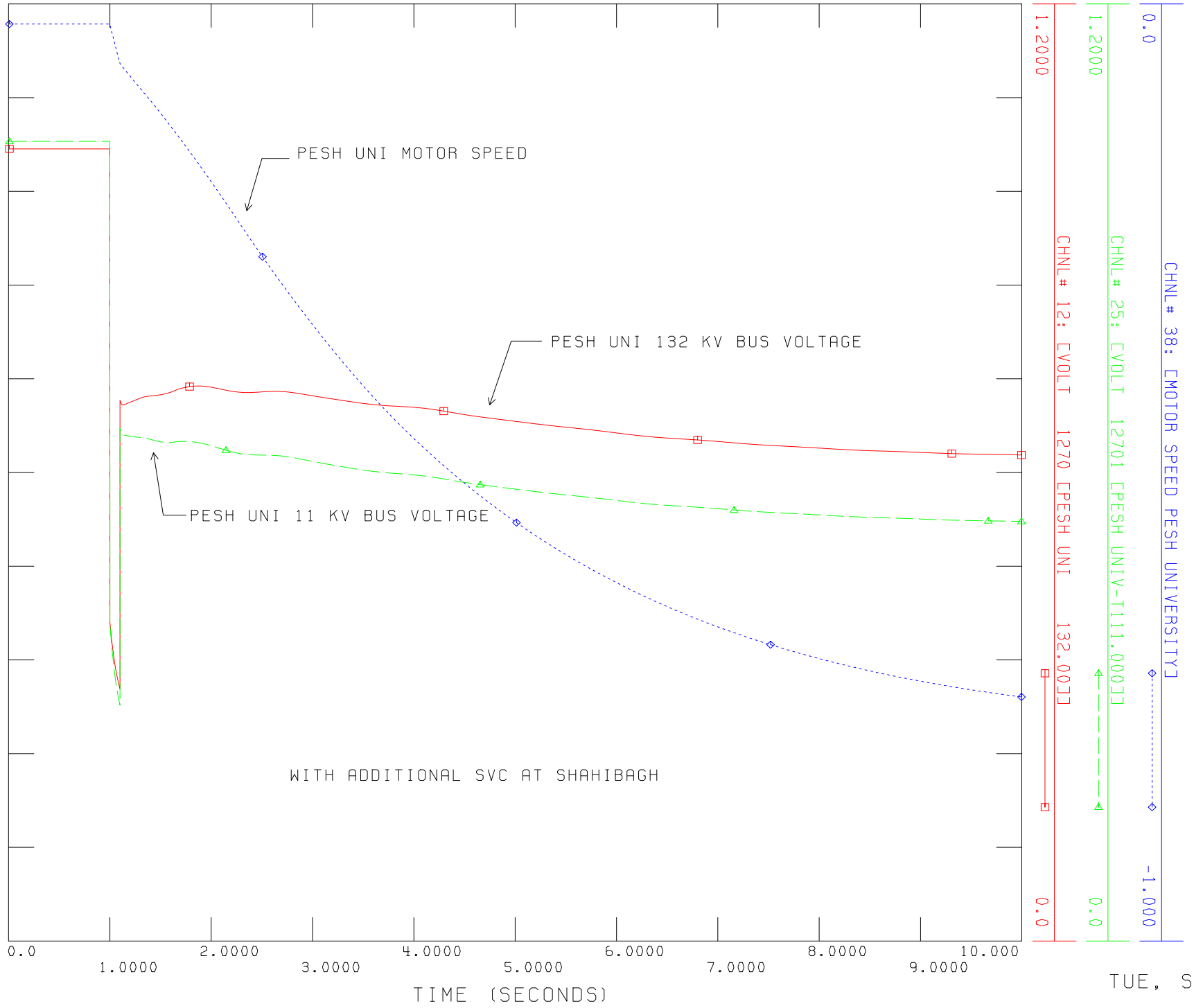
REACTIVE POWER COMPENSATION STUDY OF PESCO SYSTEM
PEAK LOAD JUNE, 2015
THREE PHASE FAULT AT PESHAWAR 500 KV, CLEARED IN 5 CYCLES
TRIP TARBELA-PESHAWAR 500 KV SINGLE CIRCUIT
FILE: ...\STAB\With-SHBG-SVC-Flt-Pesh-Tarbela-500kV.out
SIEMENS POWER TECHNOLOGIES INTERNATIONAL
CHNL# 38: [MOTOR SPEED PESH UNIVERSITY]
CHNL# 25: [VOLT 12701 [PESH UNIV-T111.000]]
CHNL# 12: [VOLT 1270 [PESH UNI 132.00]]
0.0
1.2000
-1.000
PESH UNI MOTOR SPEED
PESH UNI 132 KV BUS VOLTAGE
PESH UNI 11 KV BUS VOLTAGE
WITH ADDITIONAL SVC AT SHAHIBAGH
0.0
1.0000
2.0000
3.0000
4.0000
5.0000
6.0000
7.0000
8.0000
9.0000
10.000
TIME (SECONDS)
TUE, SEP 10 2013 13:57

FIG:2.9

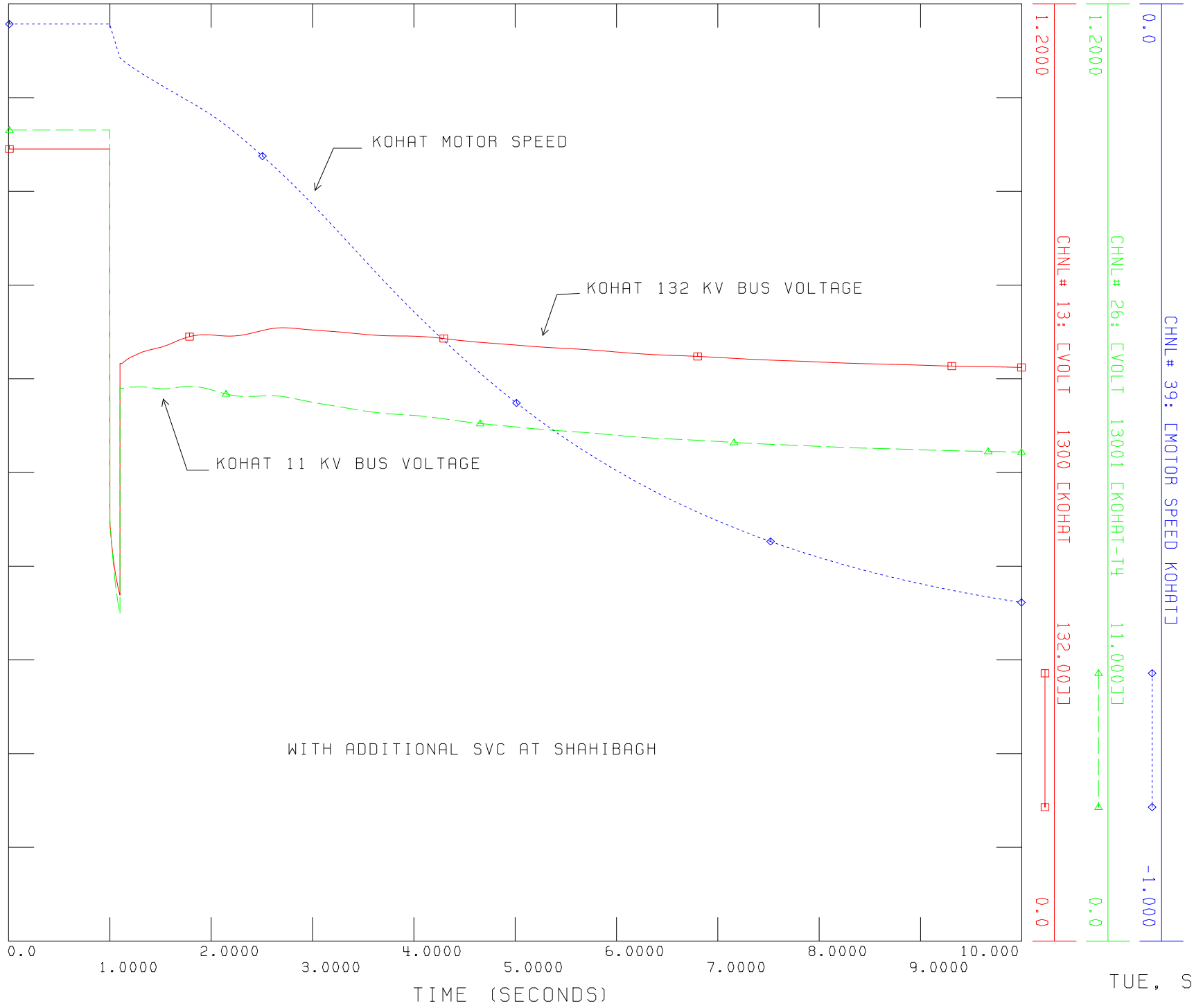
REACTIVE POWER COMPENSATION STUDY OF PESCO SYSTEM
PEAK LOAD JUNE, 2015
THREE PHASE FAULT AT PESHAWAR 500 KV, CLEARED IN 5 CYCLES
TRIP TARBELA-PESHAWAR 500 KV SINGLE CIRCUIT
FILE: ...\STAB\With-SHBG-SVC-Flt-Pesh-Tarbela-500kV.out
SIEMENS POWER TECHNOLOGIES INTERNATIONAL
CHNL# 39: [MOTOR SPEED KOHAT]
CHNL# 26: [VOLT 13001 [KOHAT-T4 11.000]]
CHNL# 13: [VOLT 1300 [KOHAT 132.00]]
0.0
-1.000
1.2000
0.0
1.2000
0.0
KOHAT MOTOR SPEED
KOHAT 132 KV BUS VOLTAGE
KOHAT 11 KV BUS VOLTAGE
WITH ADDITIONAL SVC AT SHAHIBAGH
0.0
1.0000
2.0000
3.0000
4.0000
5.0000
6.0000
7.0000
8.0000
9.0000
10.000
TIME (SECONDS)
TUE, SEP 10 2013 13:59

FIG:2.10

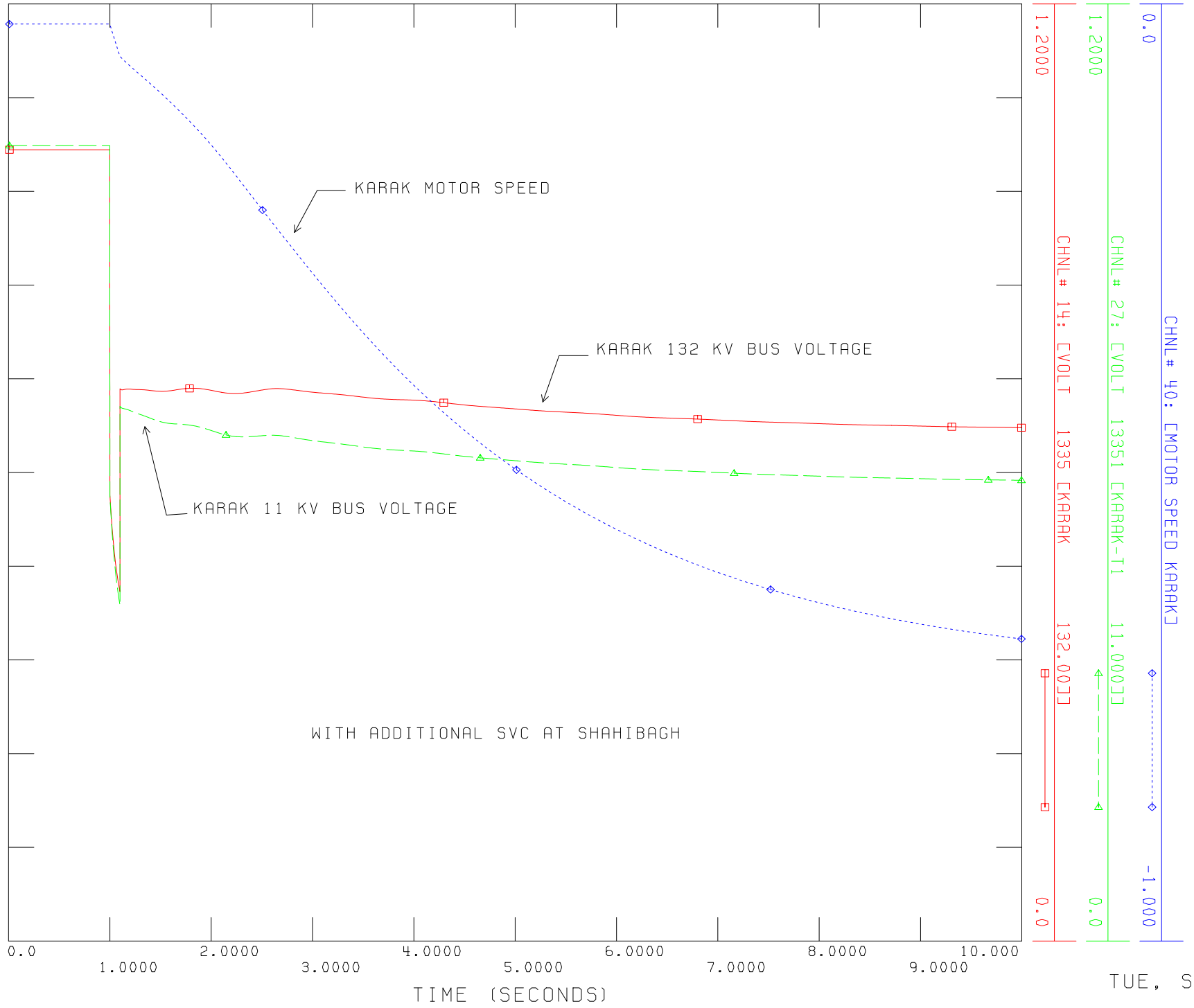

TUE, SEP 10 2013 14:01

FIG:2.11

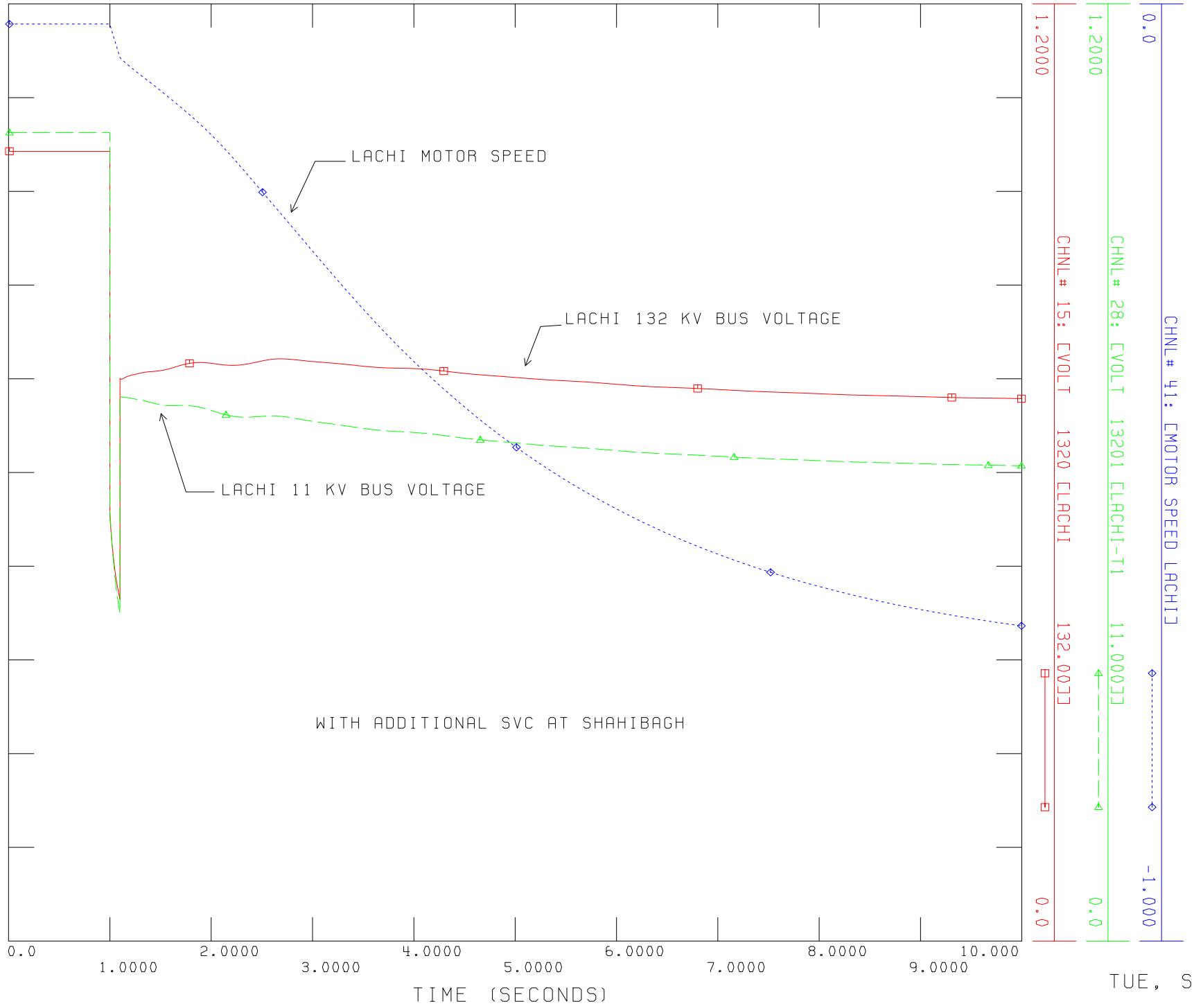
REACTIVE POWER COMPENSATION STUDY OF PESCO SYSTEM
PEAK LOAD JUNE, 2015
THREE PHASE FAULT AT PESHAWAR 500 KV, CLEARED IN 5 CYCLES
TRIP TARBELA-PESHAWAR 500 KV SINGLE CIRCUIT
FILE: ...\STAB\With-SHBG-SVC-Flt-Pesh-Tarbela-500kV.out
SIEMENS POWER TECHNOLOGIES INTERNATIONAL
CHNL# 41: [MOTOR SPEED LACHI]
CHNL# 28: [VOLT 13201 [LACHI-T1 11.000]]
CHNL# 15: [VOLT 1320 [LACHI 132.00]]
0.0
-1.000
1.2000
0.0
1.2000
0.0
LACHI MOTOR SPEED
LACHI 132 KV BUS VOLTAGE
LACHI 11 KV BUS VOLTAGE
WITH ADDITIONAL SVC AT SHAHIBAGH
0.0
1.0000
2.0000
3.0000
4.0000
5.0000
6.0000
7.0000
8.0000
9.0000
10.000
TIME (SECONDS)
TUE, SEP 10 2013 14:04

FIG:2.12

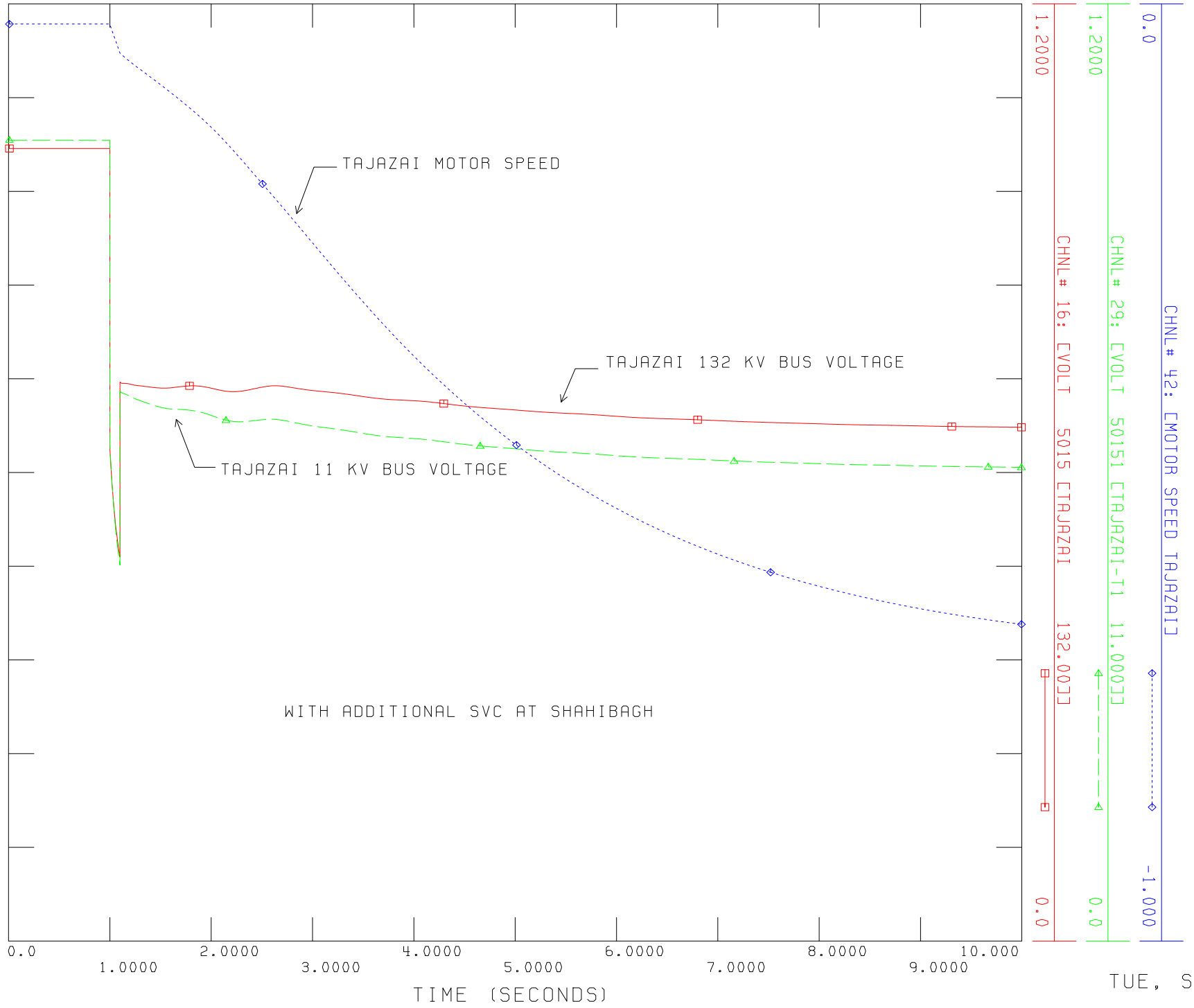
REACTIVE POWER COMPENSATION STUDY OF PESCO SYSTEM
PEAK LOAD JUNE, 2015
THREE PHASE FAULT AT PESHAWAR 500 KV, CLEARED IN 5 CYCLES
TRIP TARBELA-PESHAWAR 500 KV SINGLE CIRCUIT
FILE: ...\STAB\With-SHBG-SVC-Flt-Pesh-Tarbela-500kV.out
SIEMENS POWER TECHNOLOGIES INTERNATIONAL
CHNL# 42: [MOTOR SPEED TAJAZAI]
CHNL# 29: [VOLT 50151 [TAJAZAI-T1 11.000]]
CHNL# 16: [VOLT 5015 [TAJAZAI 132.00]]
0.0
-1.000
1.2000
0.0
1.2000
0.0
TAJAZAI MOTOR SPEED
TAJAZAI 132 KV BUS VOLTAGE
TAJAZAI 11 KV BUS VOLTAGE
WITH ADDITIONAL SVC AT SHAHIBAGH
0.0
1.0000
2.0000
3.0000
4.0000
5.0000
6.0000
7.0000
8.0000
9.0000
10.000
TIME (SECONDS)
TUE, SEP 10 2013 14:06

FIG:2.13

REACTIVE POWER COMPENSATION STUDY OF PESCO SYSTEM
PEAK LOAD JUNE, 2015
THREE PHASE FAULT AT PESHAWAR 500 KV, CLEARED IN 5 CYCLES
TRIP TARBELA-PESHAWAR 500 KV SINGLE CIRCUIT
FILE: ...\STAB\With-SHBG-SVC-Flt-Pesh-Tarbela-500kV.out

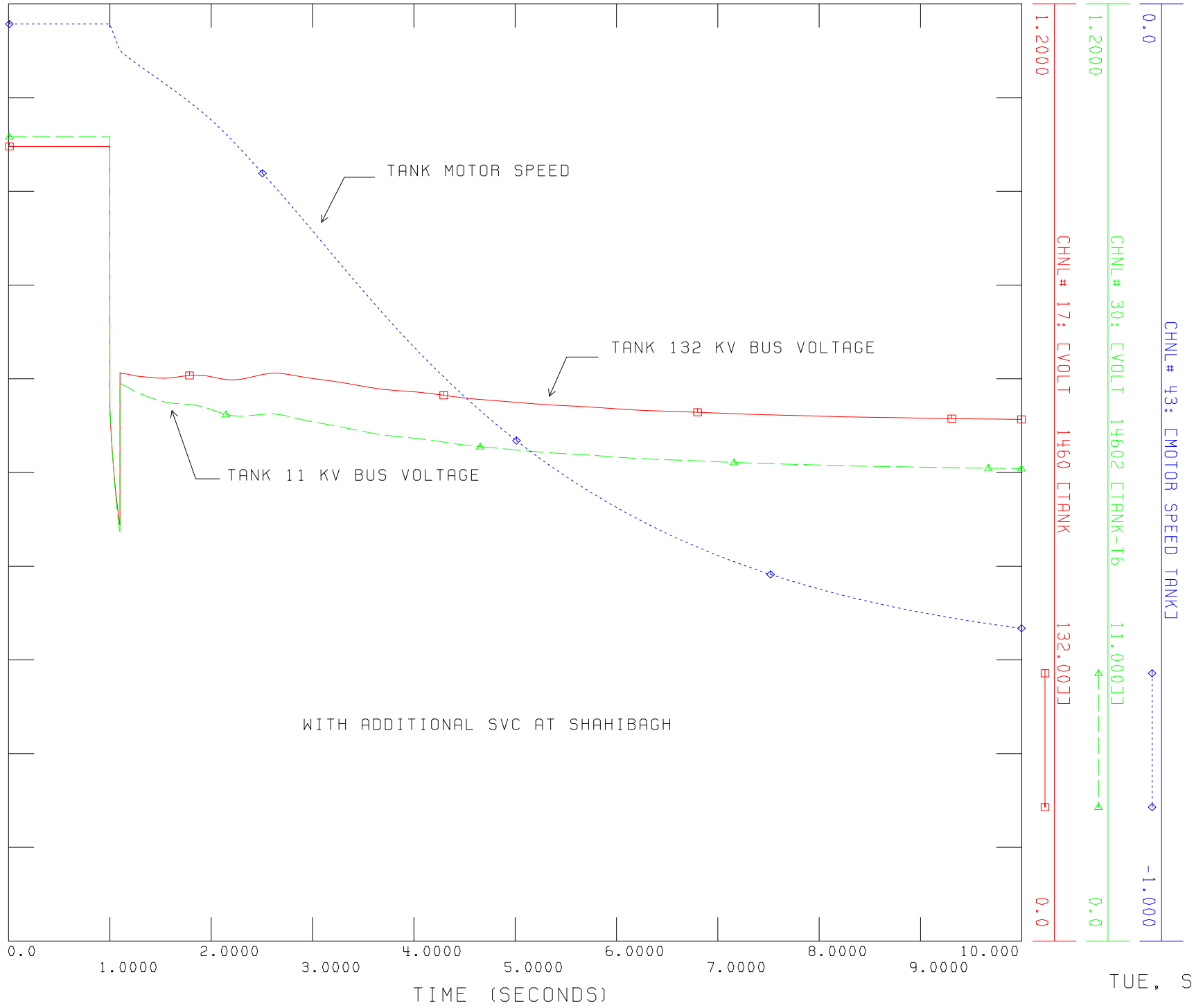

TUE, SEP 10 2013 14:10

FIG:2.14

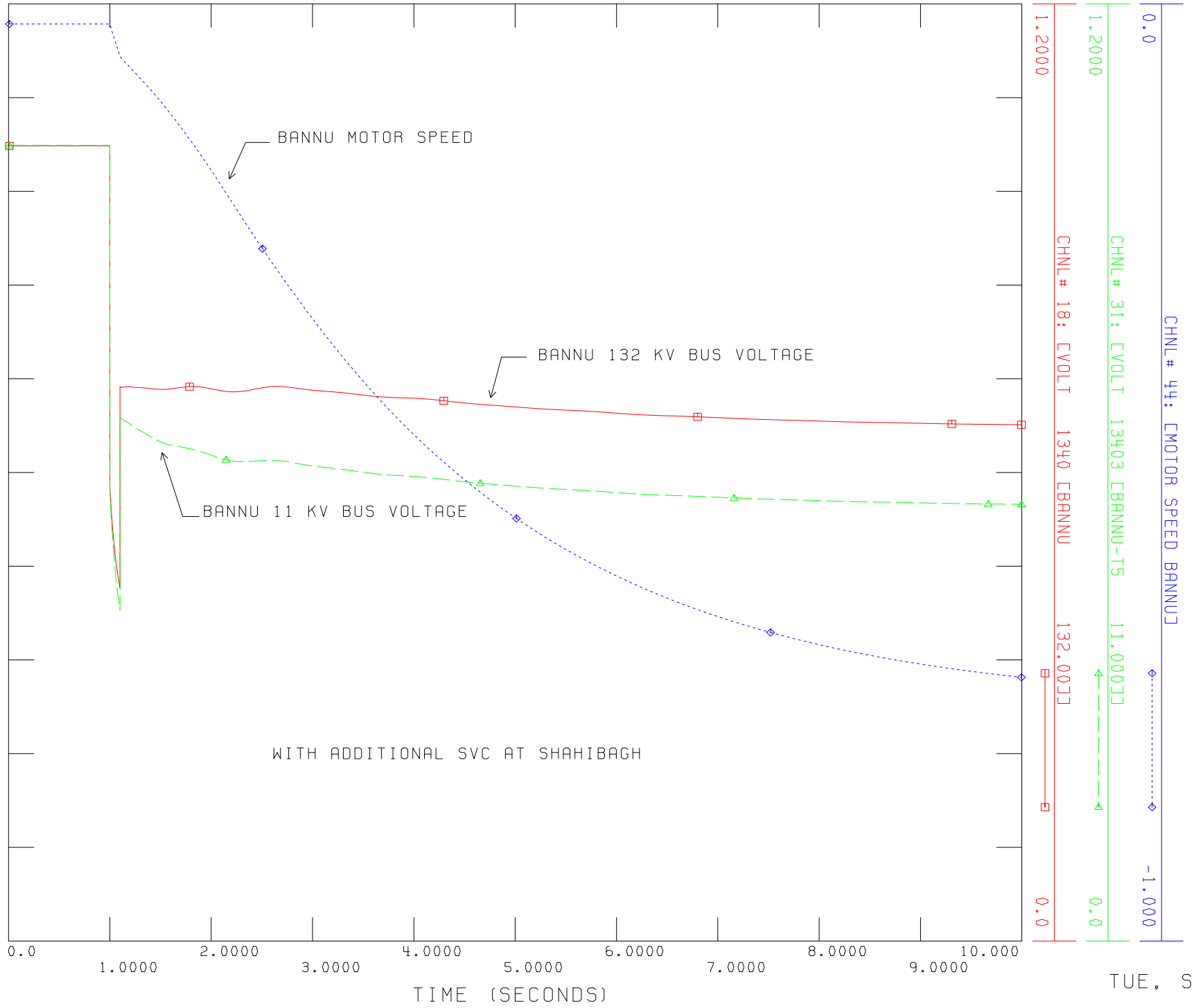
REACTIVE POWER COMPENSATION STUDY OF PESCO SYSTEM
PEAK LOAD JUNE, 2015
THREE PHASE FAULT AT PESHAWAR 500 KV, CLEARED IN 5 CYCLES
TRIP TARBELA-PESHAWAR 500 KV SINGLE CIRCUIT
FILE: ...\STAB\With-SHBG-SVC-Flt-Pesh-Tarbela-500kV.out
SIEMENS POWER TECHNOLOGIES INTERNATIONAL
CHNL# 44: [MOTOR SPEED BANNU]
CHNL# 31: [VOLT 13403 [BANNU-T5 11.000]]
CHNL# 18: [VOLT 1340 [BANNU 132.00]]
0.0
-1.000
1.2000
0.0
1.2000
0.0
BANNU MOTOR SPEED
BANNU 132 KV BUS VOLTAGE
BANNU 11 KV BUS VOLTAGE
WITH ADDITIONAL SVC AT SHAHIBAGH
0.0
1.0000
2.0000
3.0000
4.0000
5.0000
6.0000
7.0000
8.0000
9.0000
10.000
TIME (SECONDS)
TUE, SEP 10 2013 14:12

FIG:2.15

REACTIVE POWER COMPENSATION STUDY OF PESCO SYSTEM
PEAK LOAD JUNE, 2015
THREE PHASE FAULT AT PESHAWAR 500 KV, CLEARED IN 5 CYCLES
TRIP TARBELA-PESHAWAR 500 KV SINGLE CIRCUIT
FILE: ...\STAB\SHBG-Koht-SVC-Flt-Pesh-Tarbela-500kV.out

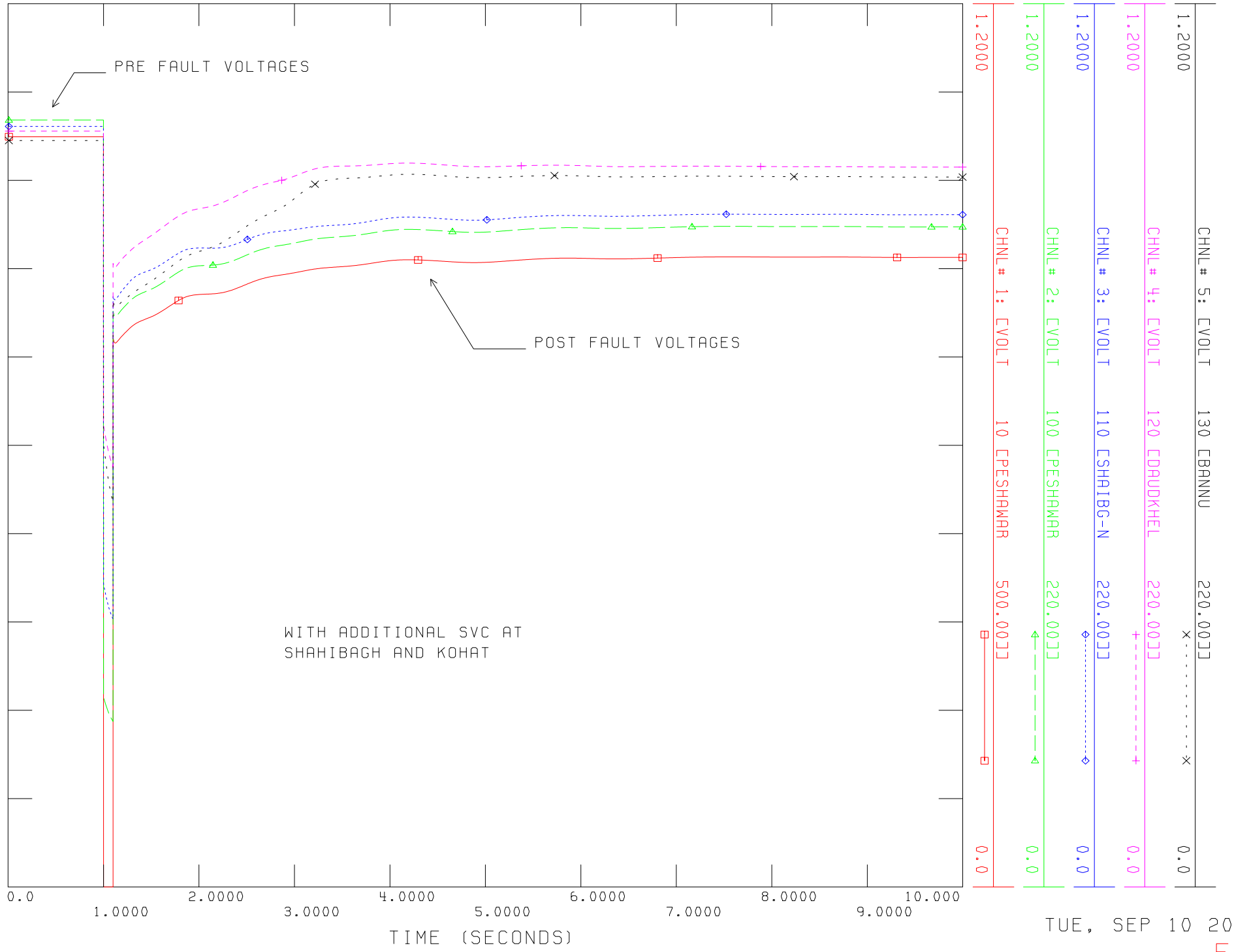

TUE, SEP 10 2013 14:15

FIG:3.1

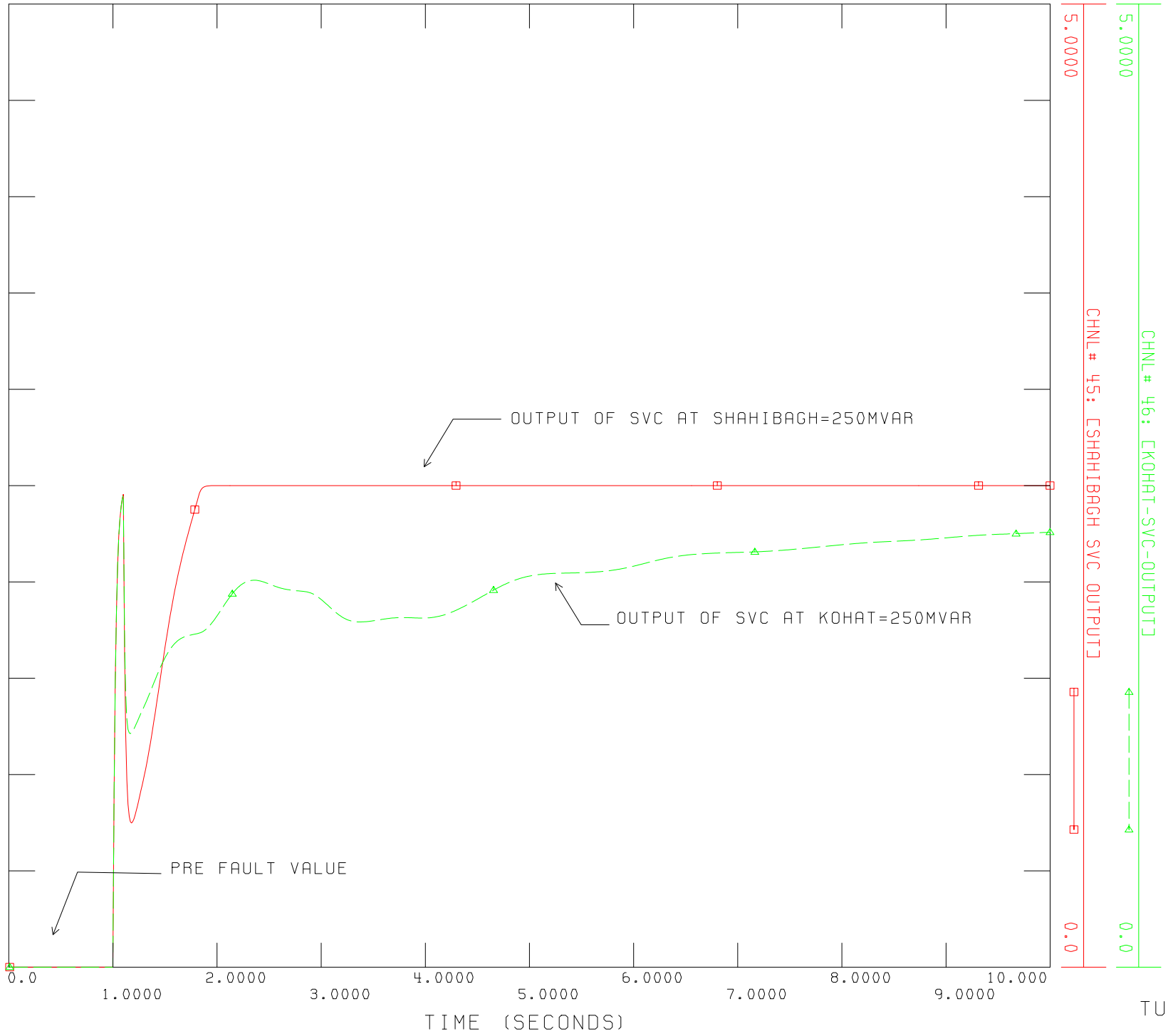

TUE, SEP 10 2013 14:18

FIG:3.2

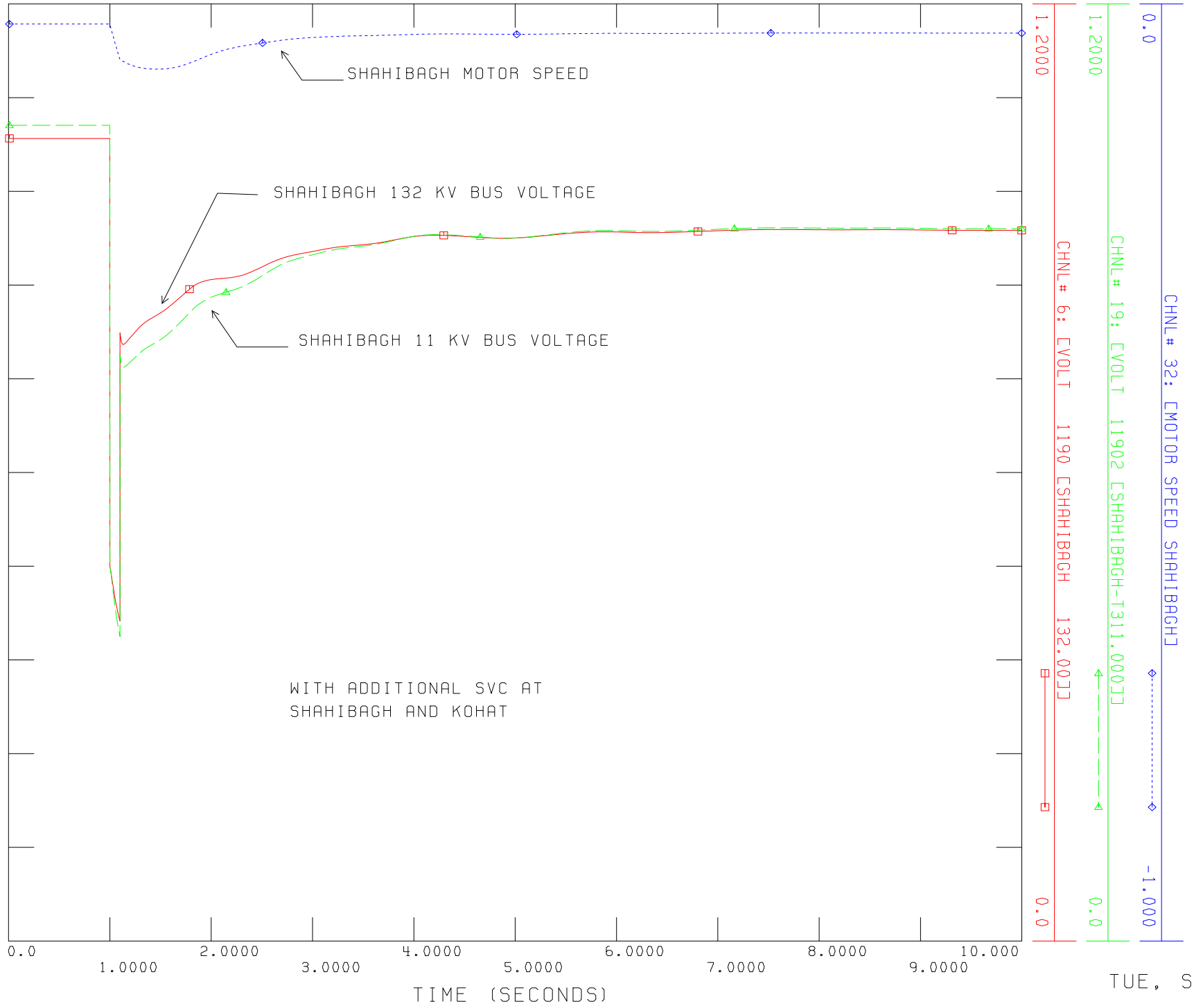
SIEMENS POWER TECHNOLOGIES INTERNATIONAL
REACTIVE POWER COMPENSATION STUDY OF PESCO SYSTEM
PEAK LOAD JUNE, 2015
THREE PHASE FAULT AT PESHAWAR 500 KV, CLEARED IN 5 CYCLES
TRIP TARBELA-PESHAWAR 500 KV SINGLE CIRCUIT
FILE: ...\STAB\SHBG-Koht-SVC-Flt-Pesh-Tarbela-500kV.out
CHNL# 32: [MOTOR SPEED SHAHIBAGH]
0.0
-1.000
CHNL# 19: [VOLT 11902 [SHAHIBAGH-T311.000]]
1.2000
0.0
CHNL# 6: [VOLT 1190 [SHAHIBAGH 132.000]]
1.2000
0.0
SHAHIBAGH MOTOR SPEED
SHAHIBAGH 132 KV BUS VOLTAGE
SHAHIBAGH 11 KV BUS VOLTAGE
WITH ADDITIONAL SVC AT
SHAHIBAGH AND KOHAT
0.0
1.0000
2.0000
3.0000
4.0000
5.0000
6.0000
7.0000
8.0000
9.0000
10.000
TIME (SECONDS)
TUE, SEP 10 2013 14:21

FIG: 3.3

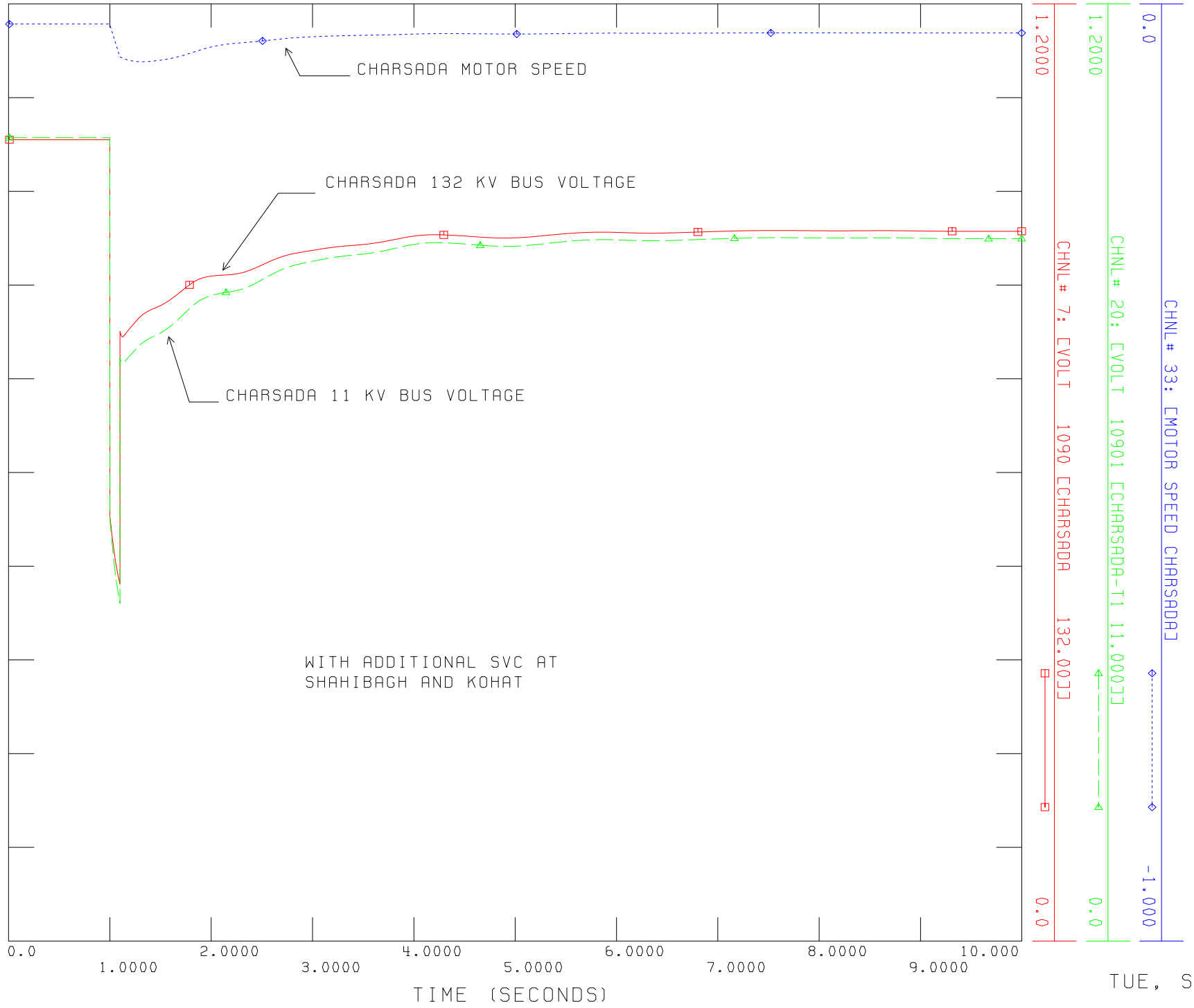

REACTIVE POWER COMPENSATION STUDY OF PESCO SYSTEM
PEAK LOAD JUNE, 2015
THREE PHASE FAULT AT PESHAWAR 500 KV, CLEARED IN 5 CYCLES
TRIP TARBELA-PESHAWAR 500 KV SINGLE CIRCUIT
FILE: ...\STAB\SHBG-Koht-SVC-Flt-Pesh-Tarbela-500kV.out

SIEMENS POWER TECHNOLOGIES INTERNATIONAL

TUE, SEP 10 2013 14:26

FIG:3.4

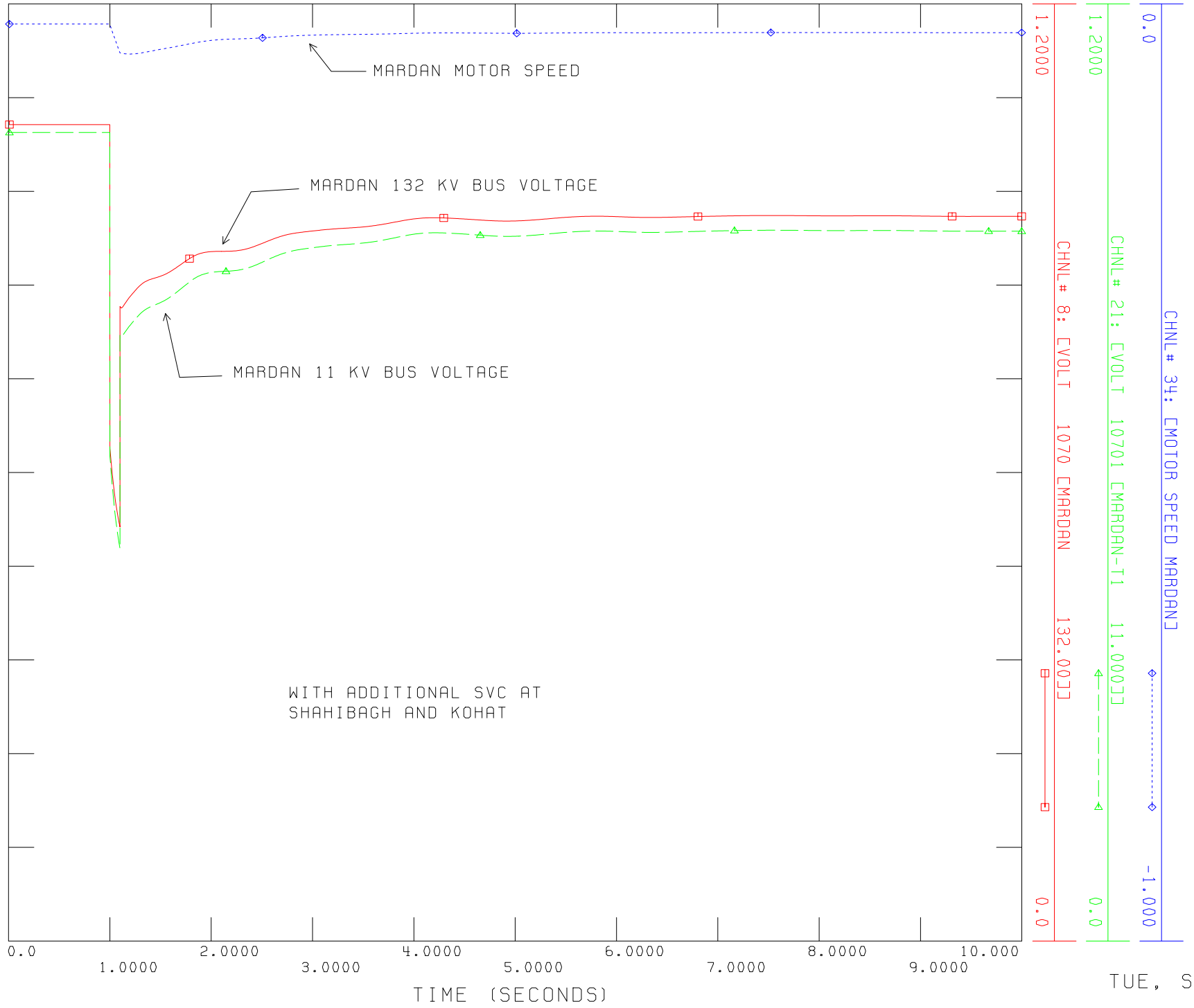

SIEMENS POWER TECHNOLOGIES INTERNATIONAL

REACTIVE POWER COMPENSATION STUDY OF PESCO SYSTEM
PEAK LOAD JUNE, 2015
THREE PHASE FAULT AT PESHAWAR 500 KV, CLEARED IN 5 CYCLES
TRIP TARBELA-PESHAWAR 500 KV SINGLE CIRCUIT
FILE: ...\STAB\SHBG-Koht-SVC-Flt-Pesh-Tarbela-500kV.out

TUE, SEP 10 2013 14:31

FIG:3.5

REACTIVE POWER COMPENSATION STUDY OF PESCO SYSTEM
PEAK LOAD JUNE, 2015
THREE PHASE FAULT AT PESHAWAR 500 KV, CLEARED IN 5 CYCLES
TRIP TARBELA-PESHAWAR 500 KV SINGLE CIRCUIT
FILE: ...\STAB\SHBG-Koht-SVC-Flt-Pesh-Tarbela-500kV.out

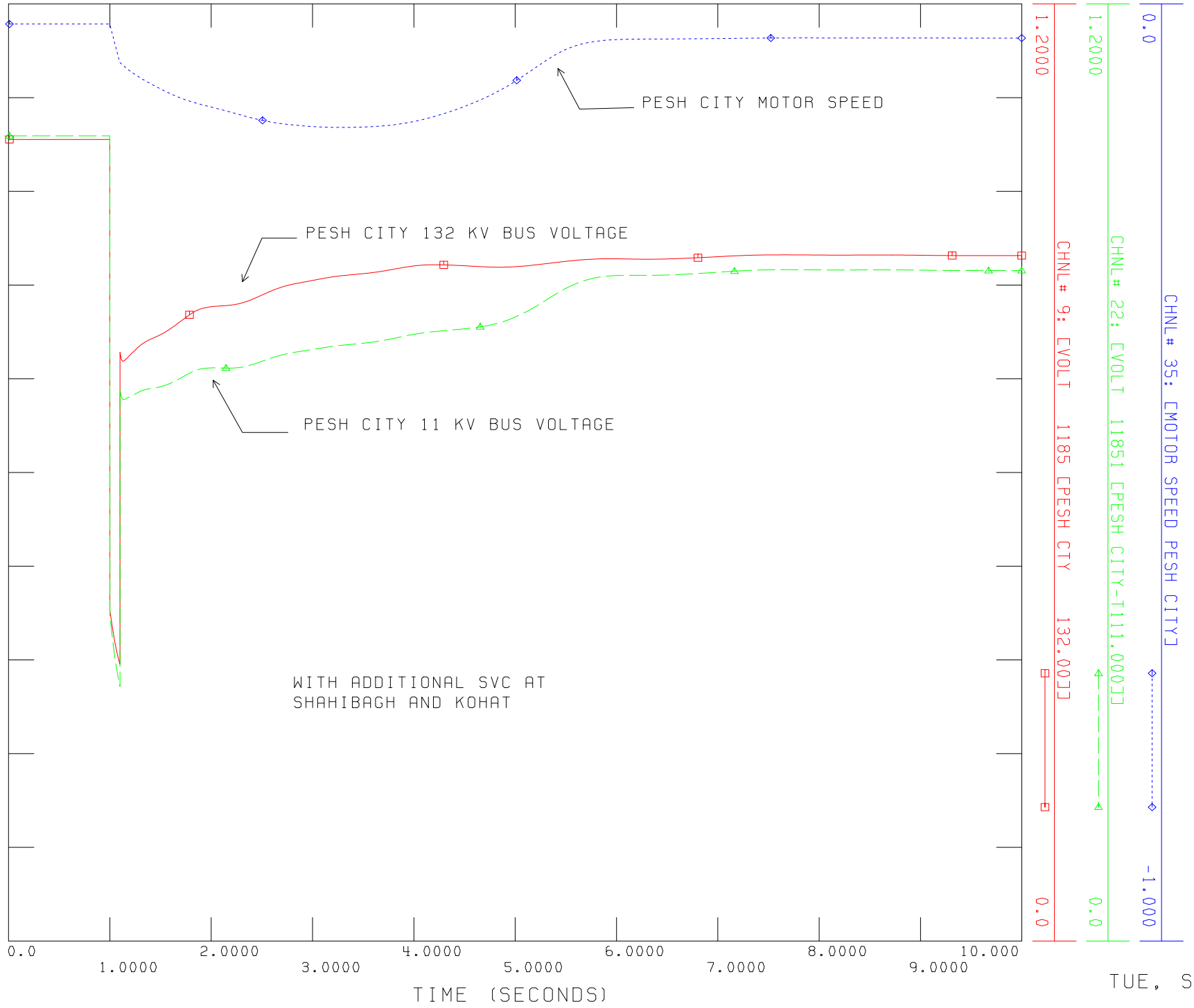

TUE, SEP 10 2013 14:34

FIG:3.6

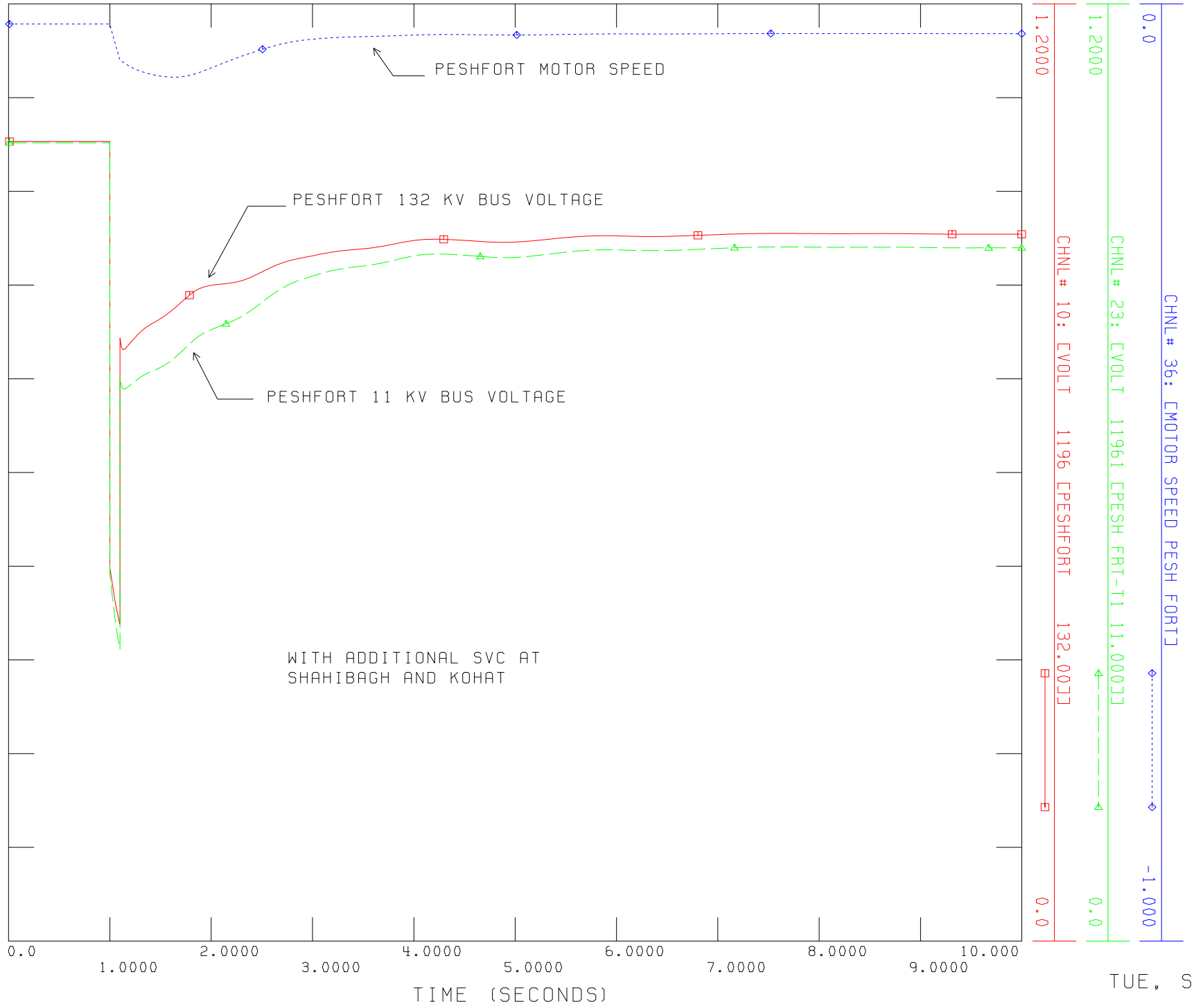

SIEMENS POWER TECHNOLOGIES INTERNATIONAL

REACTIVE POWER COMPENSATION STUDY OF PESCO SYSTEM
PEAK LOAD JUNE, 2015
THREE PHASE FAULT AT PESHAWAR 500 KV, CLEARED IN 5 CYCLES
TRIP TARBELA-PESHAWAR 500 KV SINGLE CIRCUIT
FILE: ...\STAB\SHBG-Koht-SVC-Flt-Pesh-Tarbela-500kV.out

TUE, SEP 10 2013 14:36

FIG:3.7

REACTIVE POWER COMPENSATION STUDY OF PESCO SYSTEM
PEAK LOAD JUNE, 2015
THREE PHASE FAULT AT PESHAWAR 500 KV, CLEARED IN 5 CYCLES
TRIP TARBELA-PESHAWAR 500 KV SINGLE CIRCUIT
FILE: ...\STAB\SHBG-Koht-SVC-Flt-Pesh-Tarbela-500kV.out

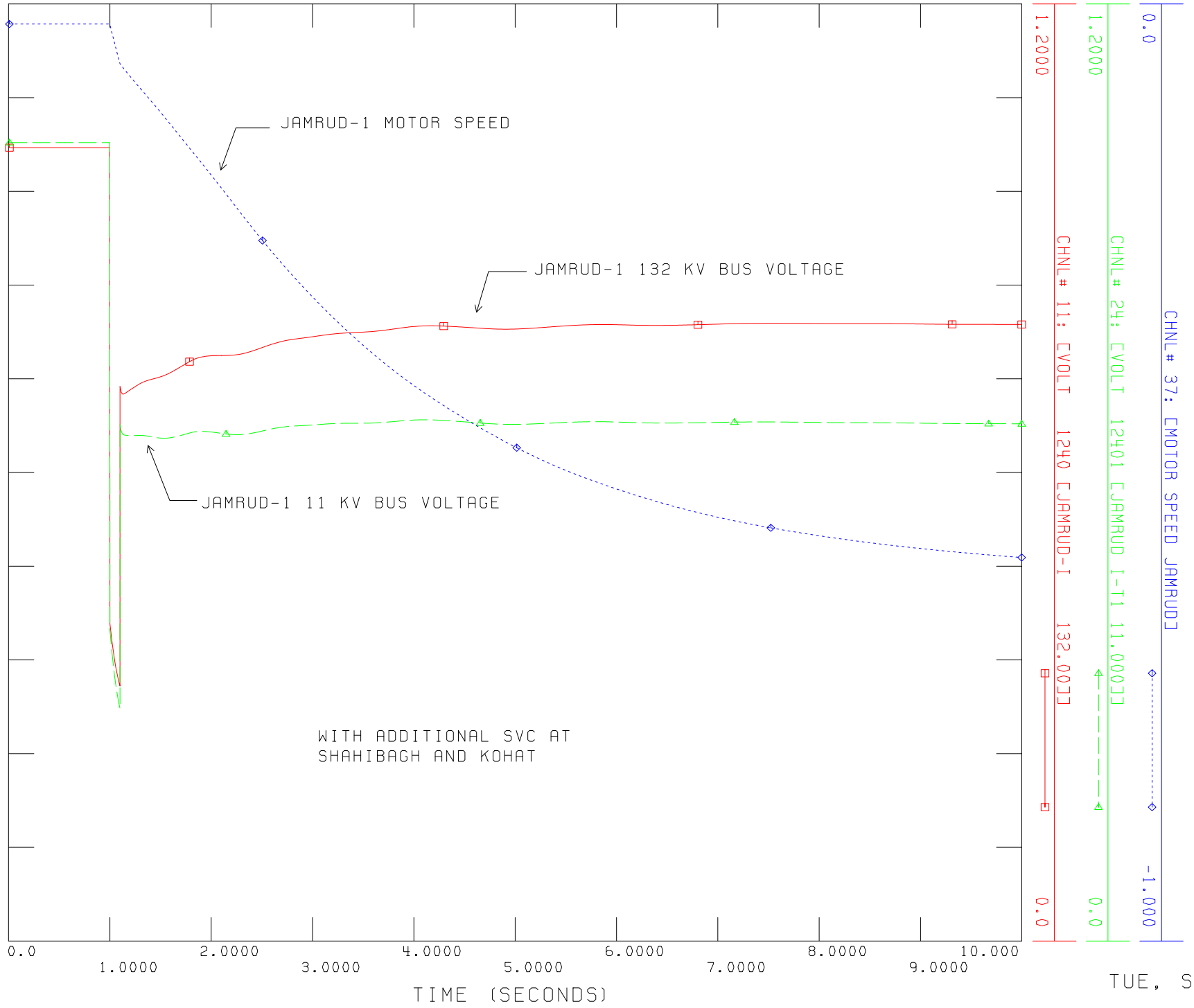

TUE, SEP 10 2013 15:16

FIG:3.8

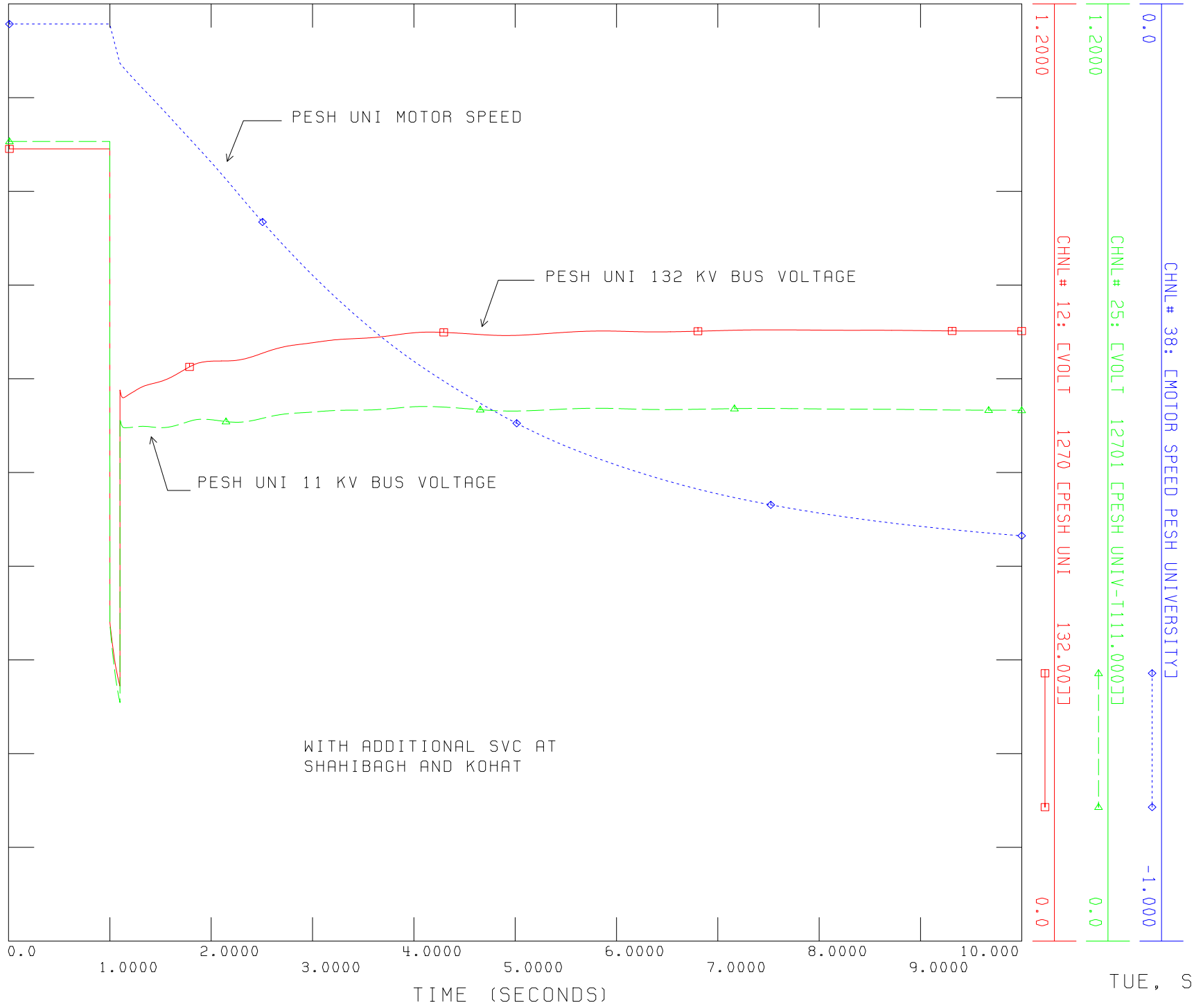

SIEMENS POWER TECHNOLOGIES INTERNATIONAL

REACTIVE POWER COMPENSATION STUDY OF PESCO SYSTEM
PEAK LOAD JUNE, 2015
THREE PHASE FAULT AT PESHAWAR 500 KV, CLEARED IN 5 CYCLES
TRIP TARBELA-PESHAWAR 500 KV SINGLE CIRCUIT
FILE: ...\STAB\SHBG-Koht-SVC-Flt-Pesh-Tarbela-500kV.out

TUE, SEP 10 2013 15:12

FIG:3.9

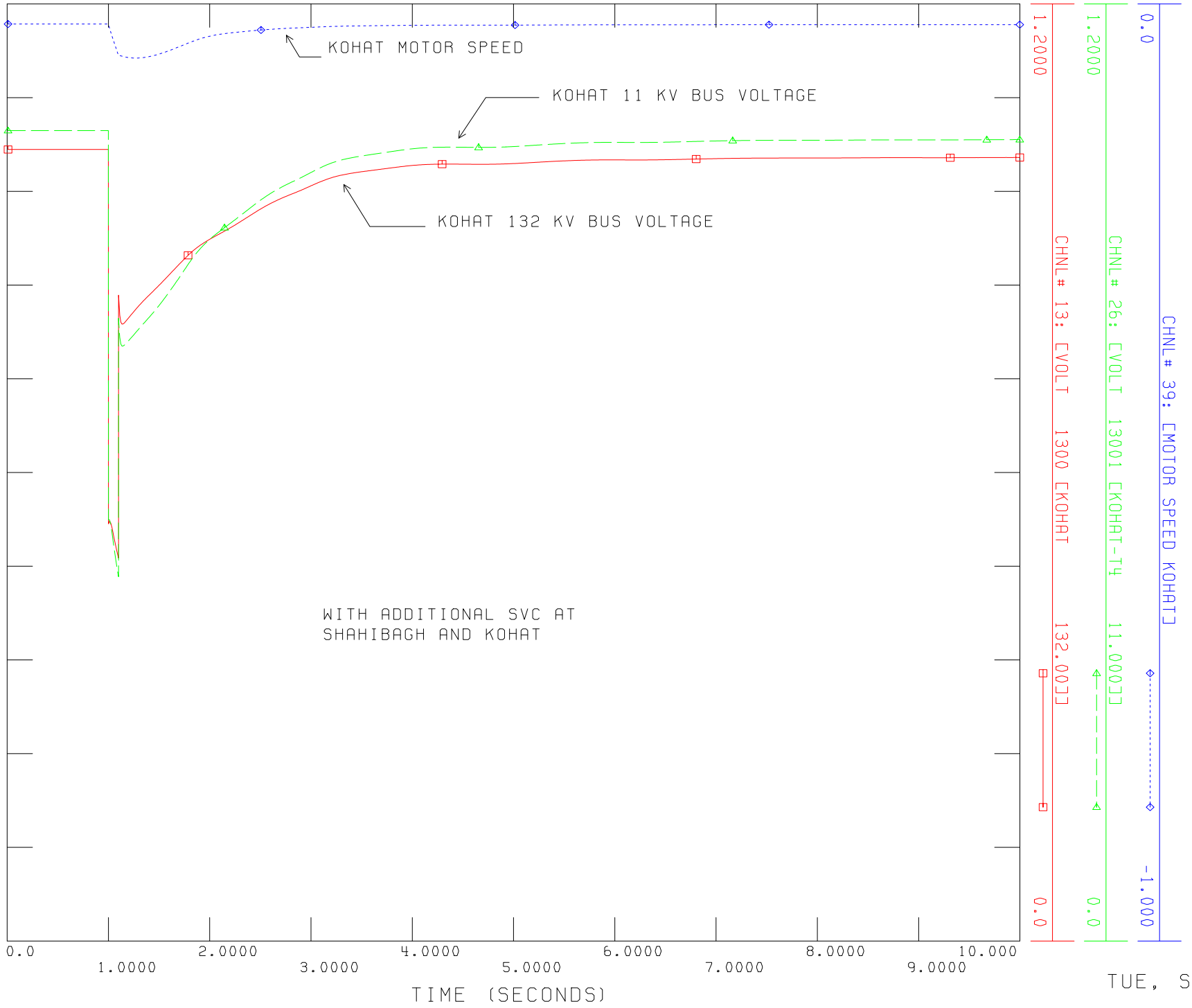

SIEMENS POWER TECHNOLOGIES INTERNATIONAL

REACTIVE POWER COMPENSATION STUDY OF PESCO SYSTEM
PEAK LOAD JUNE, 2015
THREE PHASE FAULT AT PESHAWAR 500 KV, CLEARED IN 5 CYCLES
TRIP TARBELA-PESHAWAR 500 KV SINGLE CIRCUIT
FILE: ...\STAB\SHBG-Koht-SVC-Flt-Pesh-Tarbela-500kV.out

TUE, SEP 10 2013 15:18

FIG:3.10

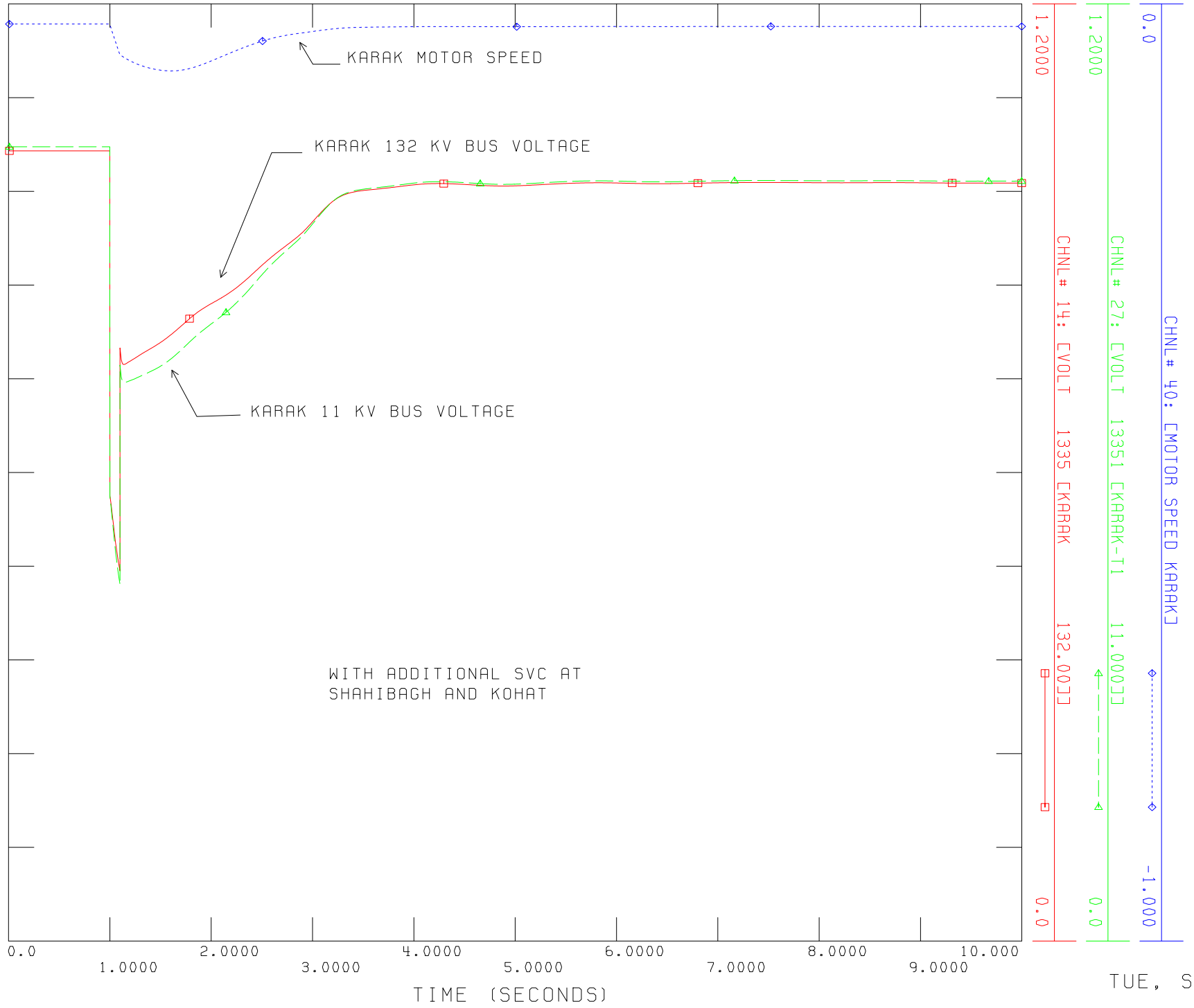

SIEMENS POWER TECHNOLOGIES INTERNATIONAL

REACTIVE POWER COMPENSATION STUDY OF PESCO SYSTEM
PEAK LOAD JUNE, 2015
THREE PHASE FAULT AT PESHAWAR 500 KV, CLEARED IN 5 CYCLES
TRIP TARBELA-PESHAWAR 500 KV SINGLE CIRCUIT
FILE: ...\STAB\SHBG-Koht-SVC-Flt-Pesh-Tarbela-500kV.out

TUE, SEP 10 2013 15:21

FIG:3.11

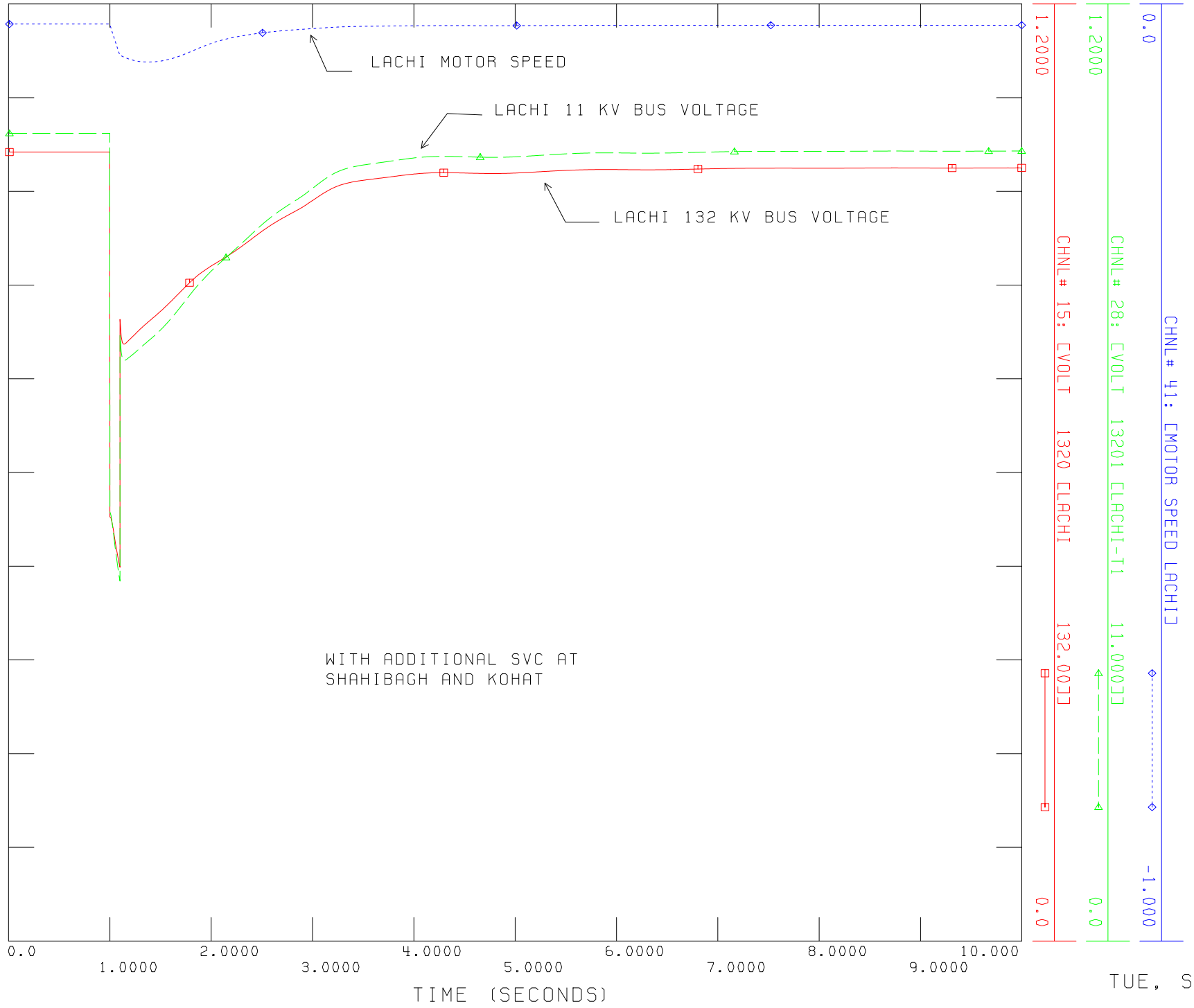

SIEMENS POWER TECHNOLOGIES INTERNATIONAL

REACTIVE POWER COMPENSATION STUDY OF PESCO SYSTEM
PEAK LOAD JUNE, 2015
THREE PHASE FAULT AT PESHAWAR 500 KV, CLEARED IN 5 CYCLES
TRIP TARBELA-PESHAWAR 500 KV SINGLE CIRCUIT
FILE: ...\STAB\SHBG-Koht-SVC-Flt-Pesh-Tarbela-500kV.out

TUE, SEP 10 2013 15:23

FIG:3.12

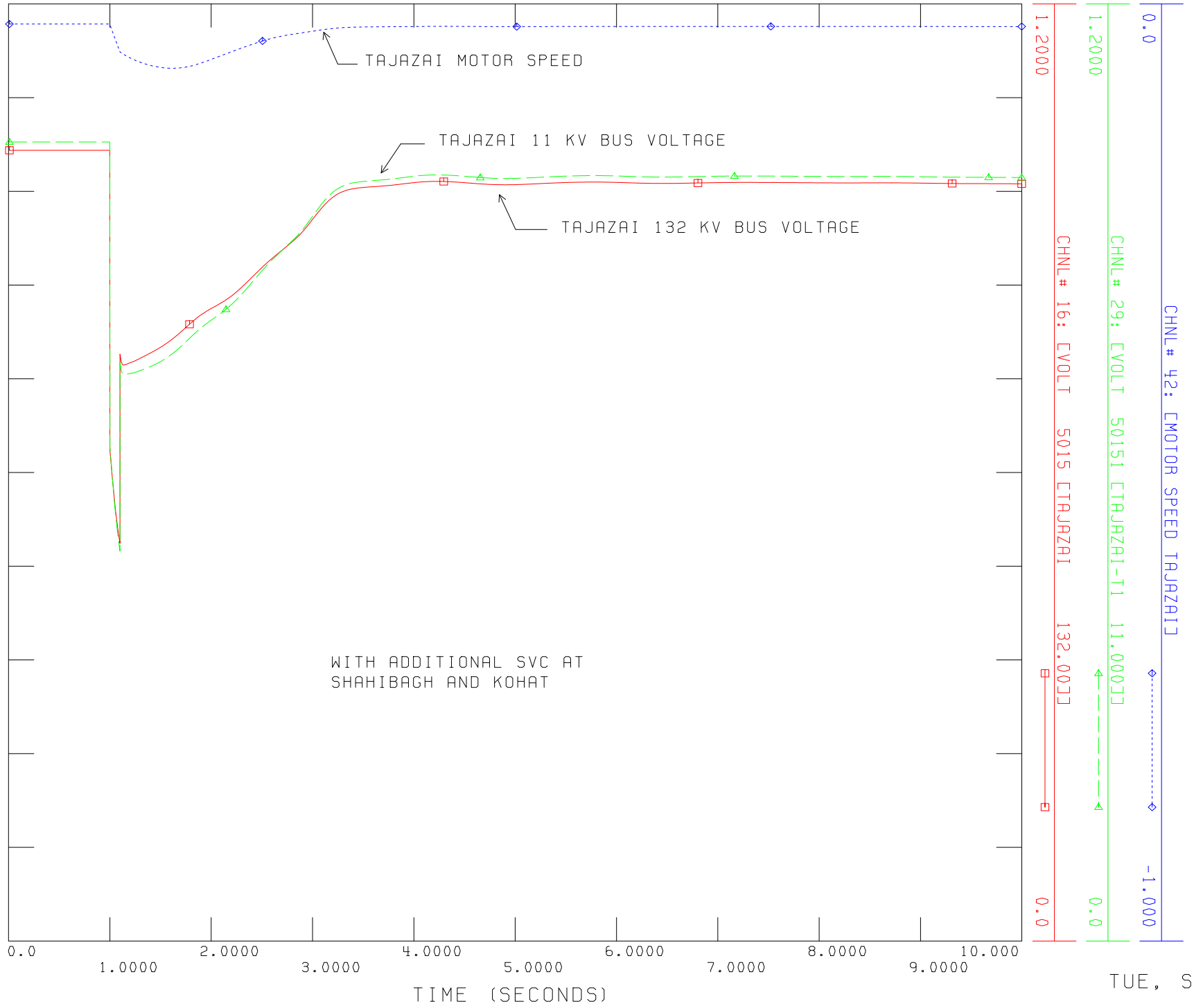

SIEMENS POWER TECHNOLOGIES INTERNATIONAL

REACTIVE POWER COMPENSATION STUDY OF PESCO SYSTEM
PEAK LOAD JUNE, 2015
THREE PHASE FAULT AT PESHAWAR 500 KV, CLEARED IN 5 CYCLES
TRIP TARBELA-PESHAWAR 500 KV SINGLE CIRCUIT
FILE: ...\STAB\SHBG-Koht-SVC-Flt-Pesh-Tarbela-500kV.out

TUE, SEP 10 2013 15:28

FIG:3.13

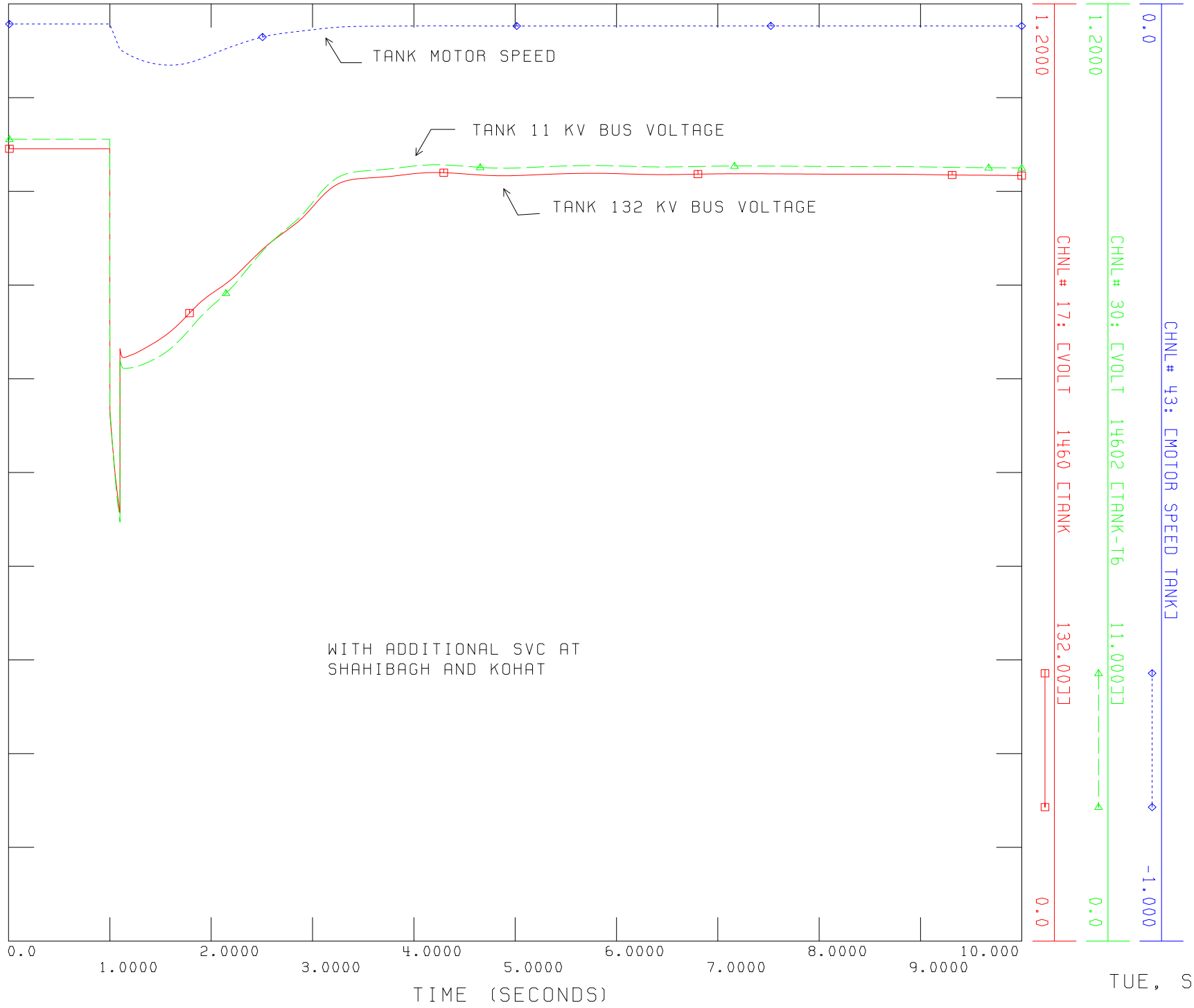

REACTIVE POWER COMPENSATION STUDY OF PESCO SYSTEM
PEAK LOAD JUNE, 2015
THREE PHASE FAULT AT PESHAWAR 500 KV, CLEARED IN 5 CYCLES
TRIP TARBELA-PESHAWAR 500 KV SINGLE CIRCUIT
FILE: ...\STAB\SHBG-Koht-SVC-Flt-Pesh-Tarbela-500kV.out

SIEMENS POWER TECHNOLOGIES INTERNATIONAL

TUE, SEP 10 2013 15:30

FIG:3.14

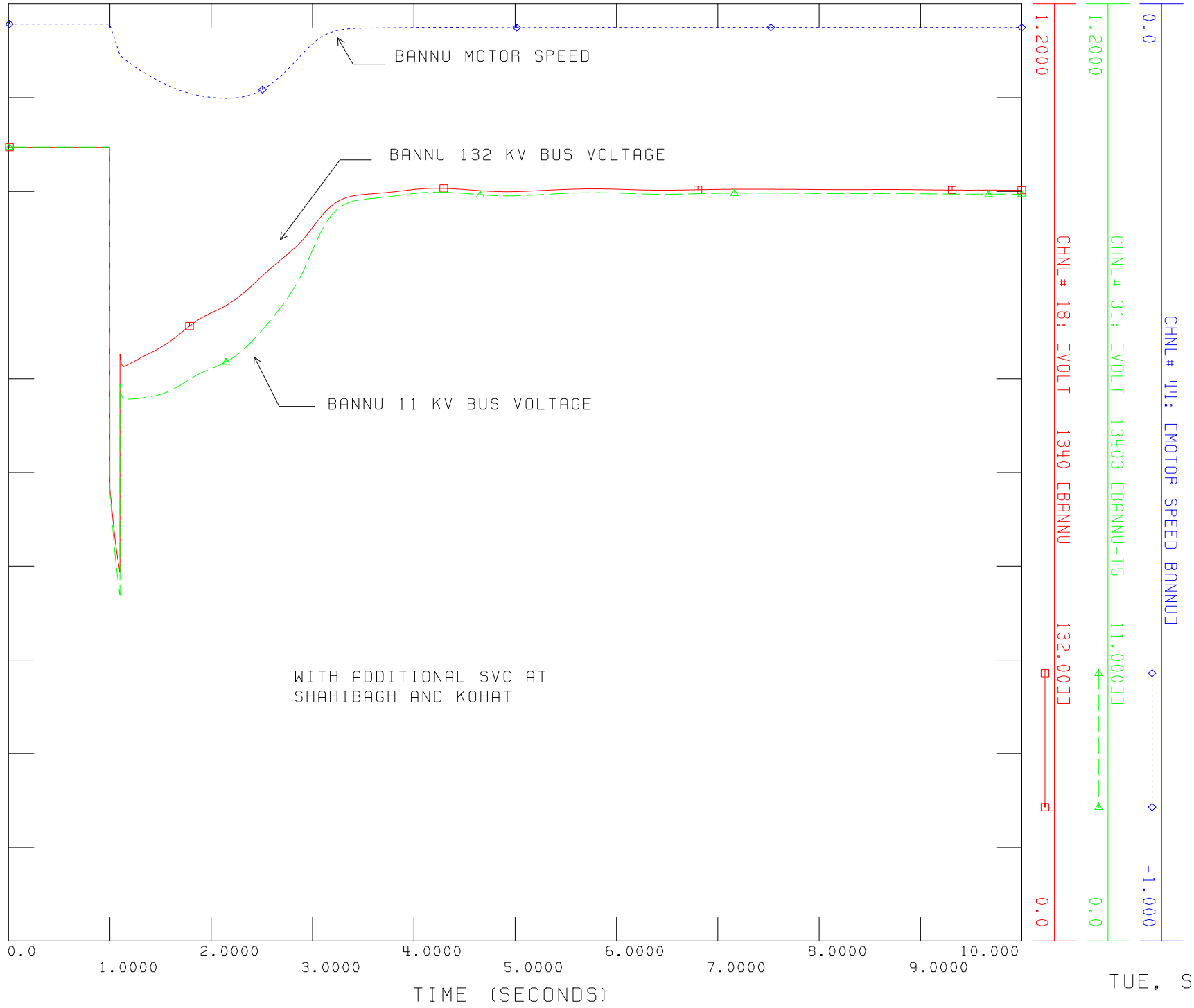

REACTIVE POWER COMPENSATION STUDY OF PESCO SYSTEM
PEAK LOAD JUNE, 2015
THREE PHASE FAULT AT PESHAWAR 500 KV, CLEARED IN 5 CYCLES
TRIP TARBELA-PESHAWAR 500 KV SINGLE CIRCUIT
FILE: ...\STAB\SHBG-Koht-SVC-Flt-Pesh-Tarbela-500kV.out

SIEMENS POWER TECHNOLOGIES INTERNATIONAL

TUE, SEP 10 2013 15:31

FIG:3.15

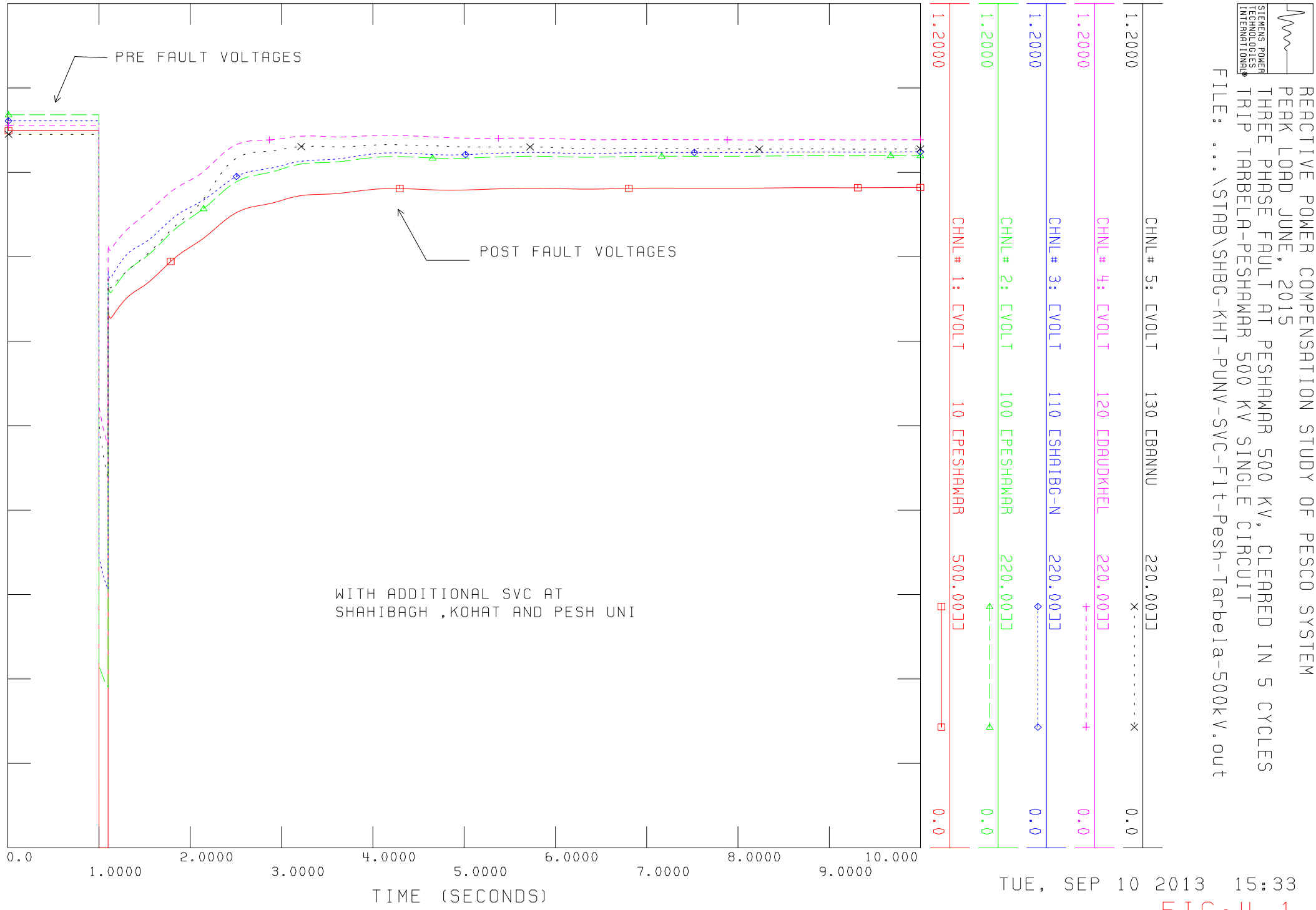
REACTIVE POWER COMPENSATION STUDY OF PESCO SYSTEM
PEAK LOAD JUNE, 2015
THREE PHASE FAULT AT PESHAWAR 500 KV, CLEARED IN 5 CYCLES
TRIP TARBELA-PESHAWAR 500 KV SINGLE CIRCUIT
FILE: ...\STAB\SHBG-KHT-PUNV-SVC-Flt-Pesh-Tarbela-500kV.out
SIEMENS POWER TECHNOLOGIES INTERNATIONAL
CHNL# 5: [VOLT 130 [BANNU 220.0000]
CHNL# 4: [VOLT 120 [DAUDKHEL 220.0000]
CHNL# 3: [VOLT 110 [SHAIBG-N 220.0000]
CHNL# 2: [VOLT 100 [PESHAWAR 220.0000]
CHNL# 1: [VOLT 10 [PESHAWAR 500.0000]
1.2000
0.0
PRE FAULT VOLTAGES
POST FAULT VOLTAGES
WITH ADDITIONAL SVC AT
SHAHIBAGH ,KOHAT AND PESH UNI
0.0
1.0000
2.0000
3.0000
4.0000
5.0000
6.0000
7.0000
8.0000
9.0000
10.000
TIME (SECONDS)
TUE, SEP 10 2013 15:33

FIG:4.1

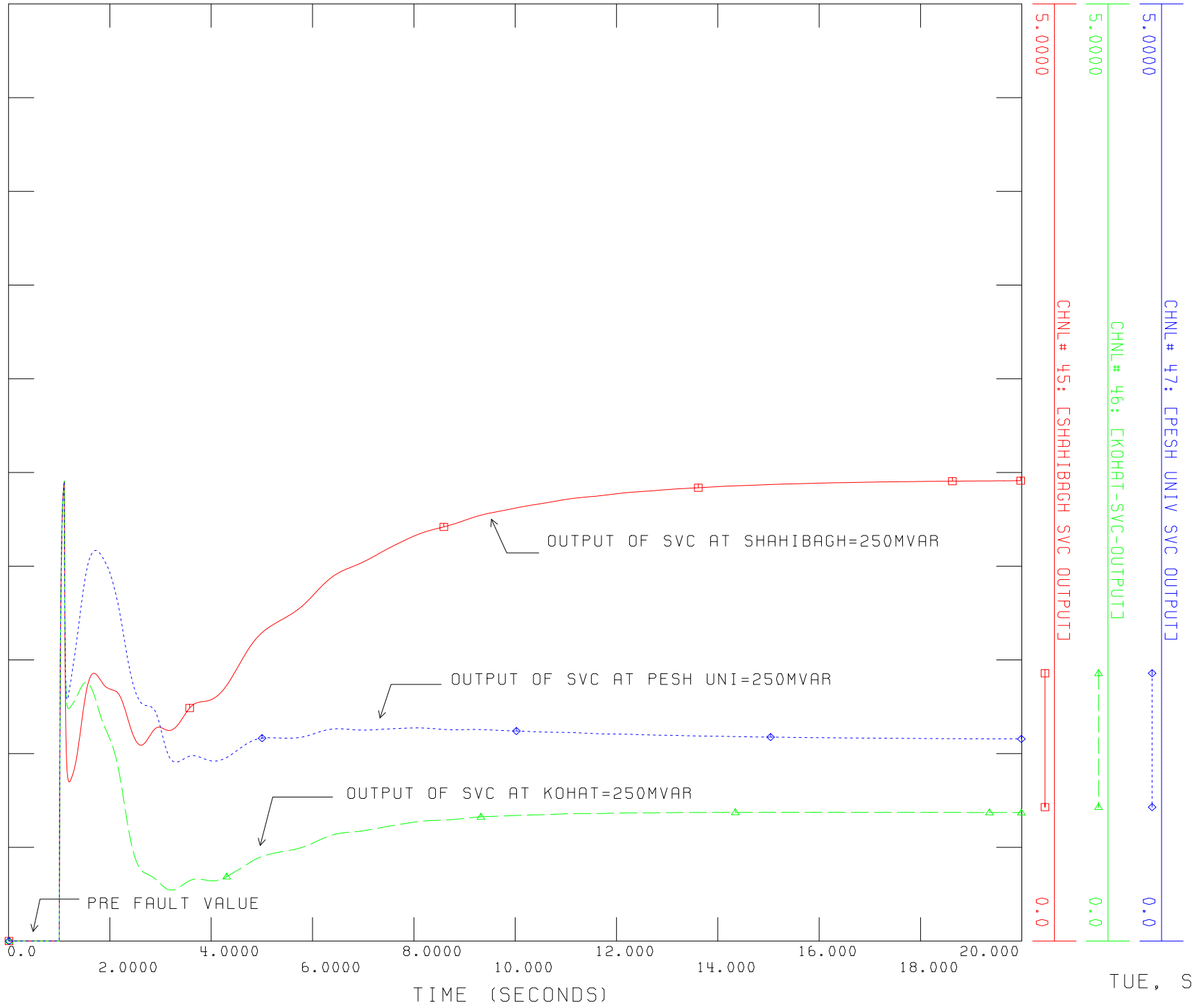
REACTIVE POWER COMPENSATION STUDY OF PESCO SYSTEM
PEAK LOAD JUNE, 2015
THREE PHASE FAULT AT PESHAWAR 500 KV, CLEARED IN 5 CYCLES
TRIP TARBELA-PESHAWAR 500 KV SINGLE CIRCUIT
FILE: ...\STAB\SHBG-KHT-PUNV-SVC-Flt-Pesh-Tarbela-500kV.out
SIEMENS POWER TECHNOLOGIES INTERNATIONAL
CHNL # 47: [PESH UNIV SVC OUTPUT]
CHNL # 46: [KOHAT-SVC-OUTPUT]
CHNL # 45: [SHAHIBAGH SVC OUTPUT]
5.0000
0.0
OUTPUT OF SVC AT SHAHIBAGH=250MVAR
OUTPUT OF SVC AT PESH UNI=250MVAR
OUTPUT OF SVC AT KOHAT=250MVAR
PRE FAULT VALUE
0.0
2.0000
4.0000
6.0000
8.0000
10.000
12.000
14.000
16.000
18.000
20.000
TIME (SECONDS)
TUE, SEP 10 2013 19:32

FIG:4.2

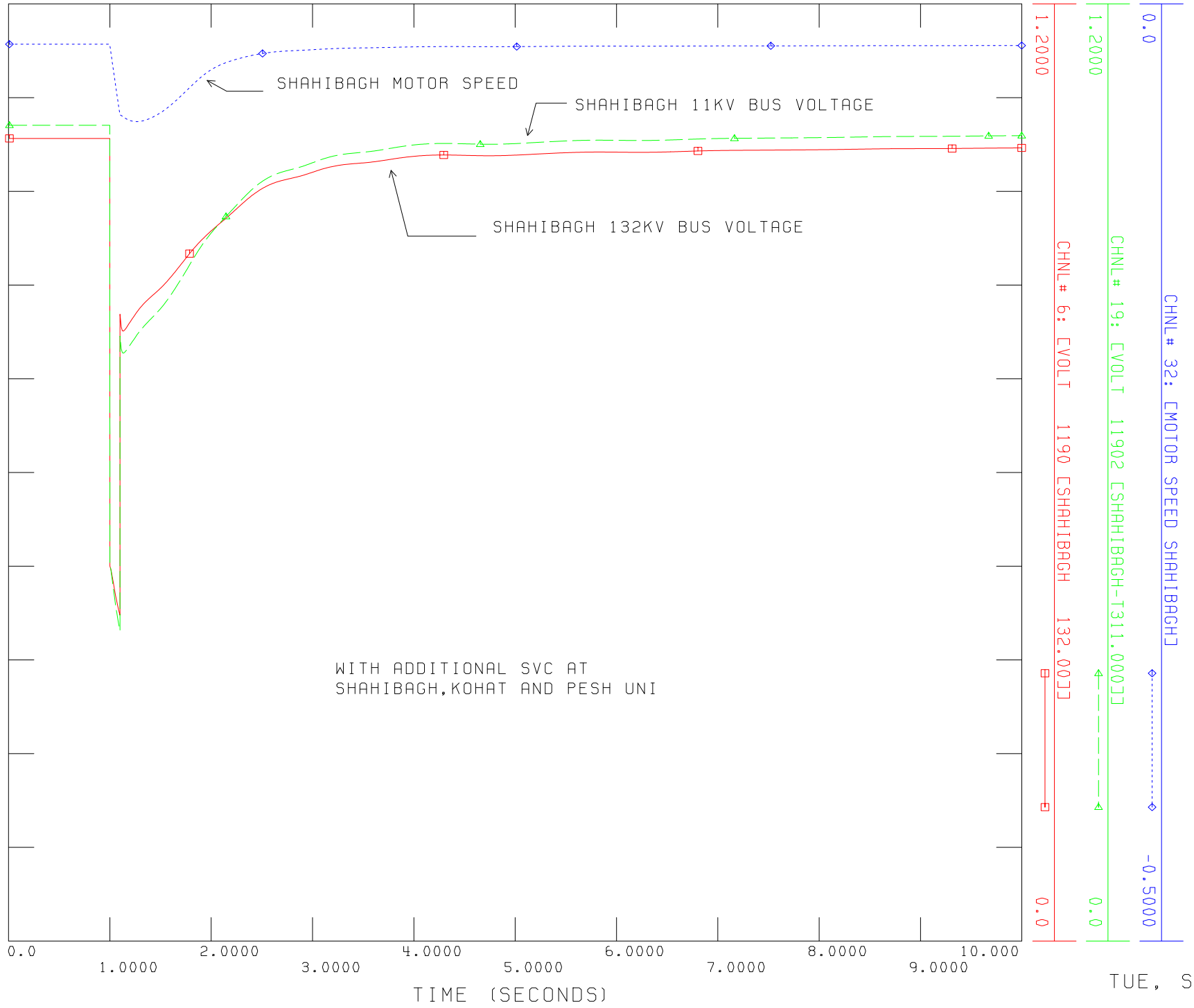

REACTIVE POWER COMPENSATION STUDY OF PESCO SYSTEM
PEAK LOAD JUNE, 2015
THREE PHASE FAULT AT PESHAWAR 500 KV, CLEARED IN 5 CYCLES
TRIP TARBELA-PESHAWAR 500 KV SINGLE CIRCUIT
FILE: ...\STAB\SHBG-KHT-PUNV-SVC-Flt-Pesh-Tarbela-500kV.out

SIEMENS POWER TECHNOLOGIES INTERNATIONAL

TUE, SEP 10 2013 19:39

FIG:4.3

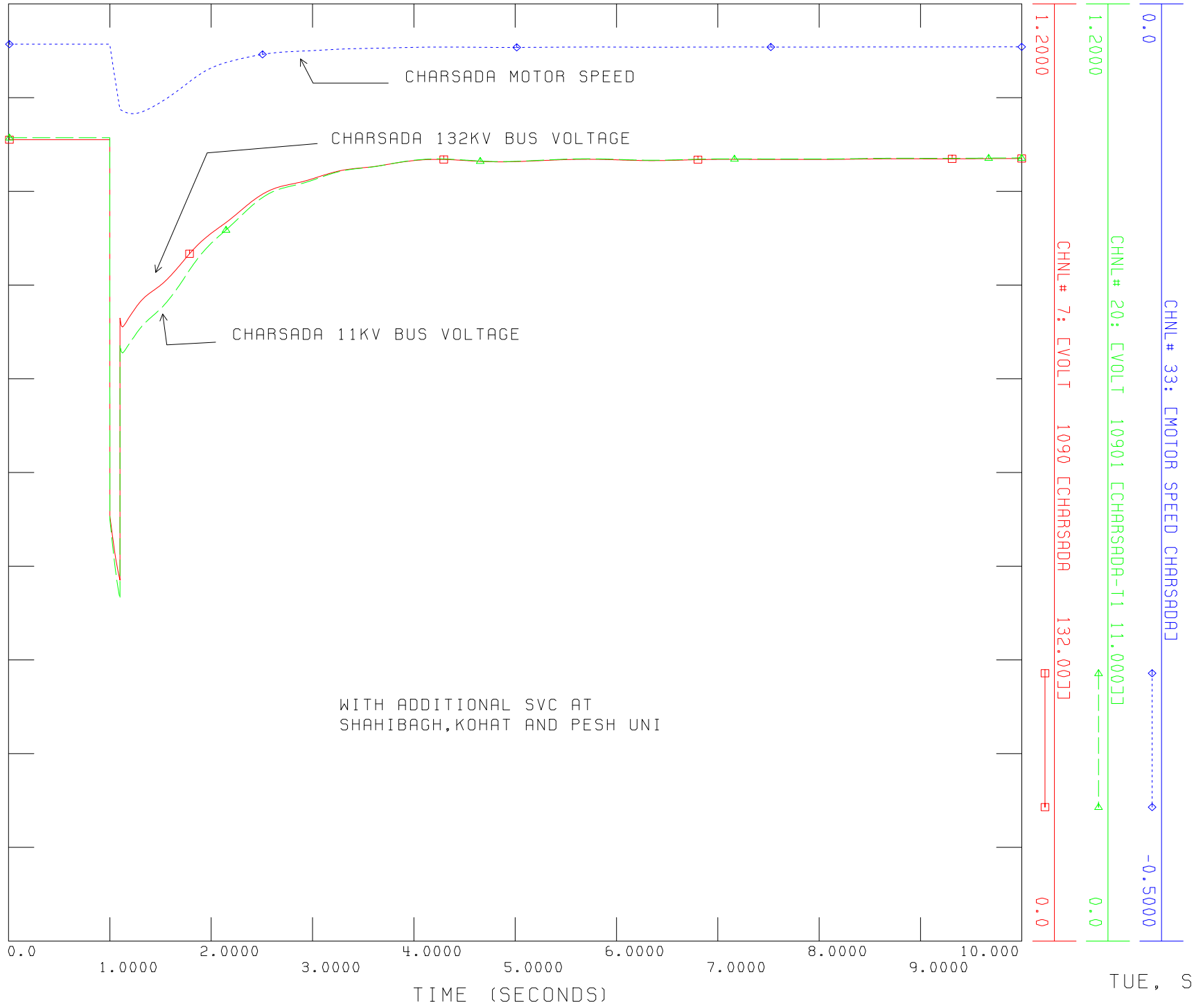

REACTIVE POWER COMPENSATION STUDY OF PESCO SYSTEM
PEAK LOAD JUNE, 2015
THREE PHASE FAULT AT PESHAWAR 500 KV, CLEARED IN 5 CYCLES
TRIP TARBELA-PESHAWAR 500 KV SINGLE CIRCUIT
FILE: ...\STAB\SHBG-KHT-PUNV-SVC-Flt-Pesh-Tarbela-500kV.out

SIEMENS POWER TECHNOLOGIES INTERNATIONAL

TUE, SEP 10 2013 19:50

FIG:4.4

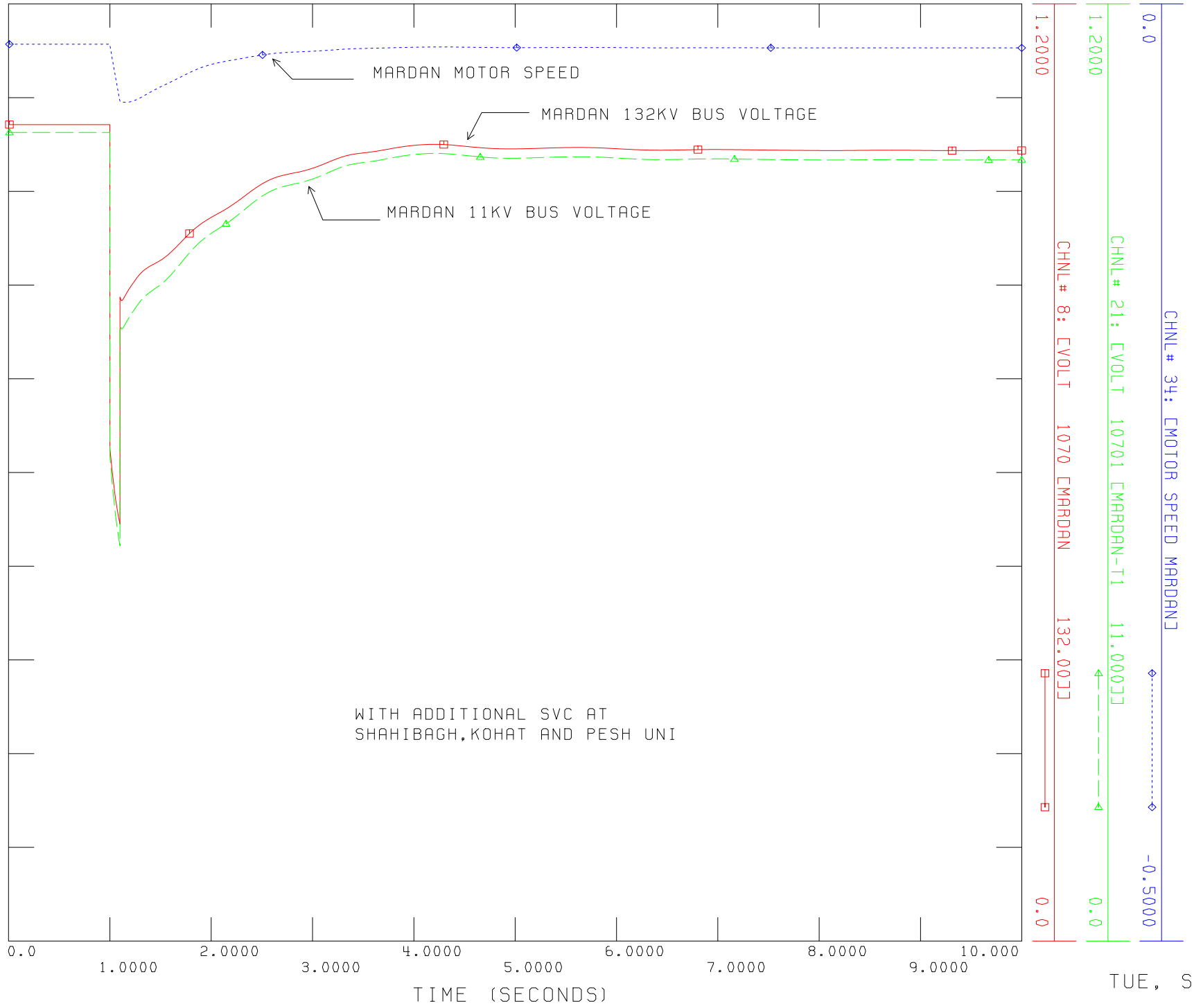

SIEMENS POWER TECHNOLOGIES INTERNATIONAL

REACTIVE POWER COMPENSATION STUDY OF PESCO SYSTEM
PEAK LOAD JUNE, 2015
THREE PHASE FAULT AT PESHAWAR 500 KV, CLEARED IN 5 CYCLES
TRIP TARBELA-PESHAWAR 500 KV SINGLE CIRCUIT
FILE: ...\STAB\SHBG-KHT-PUNV-SVC-Flt-Pesh-Tarbela-500kV.out

TUE, SEP 10 2013 19:52

FIG:4.5

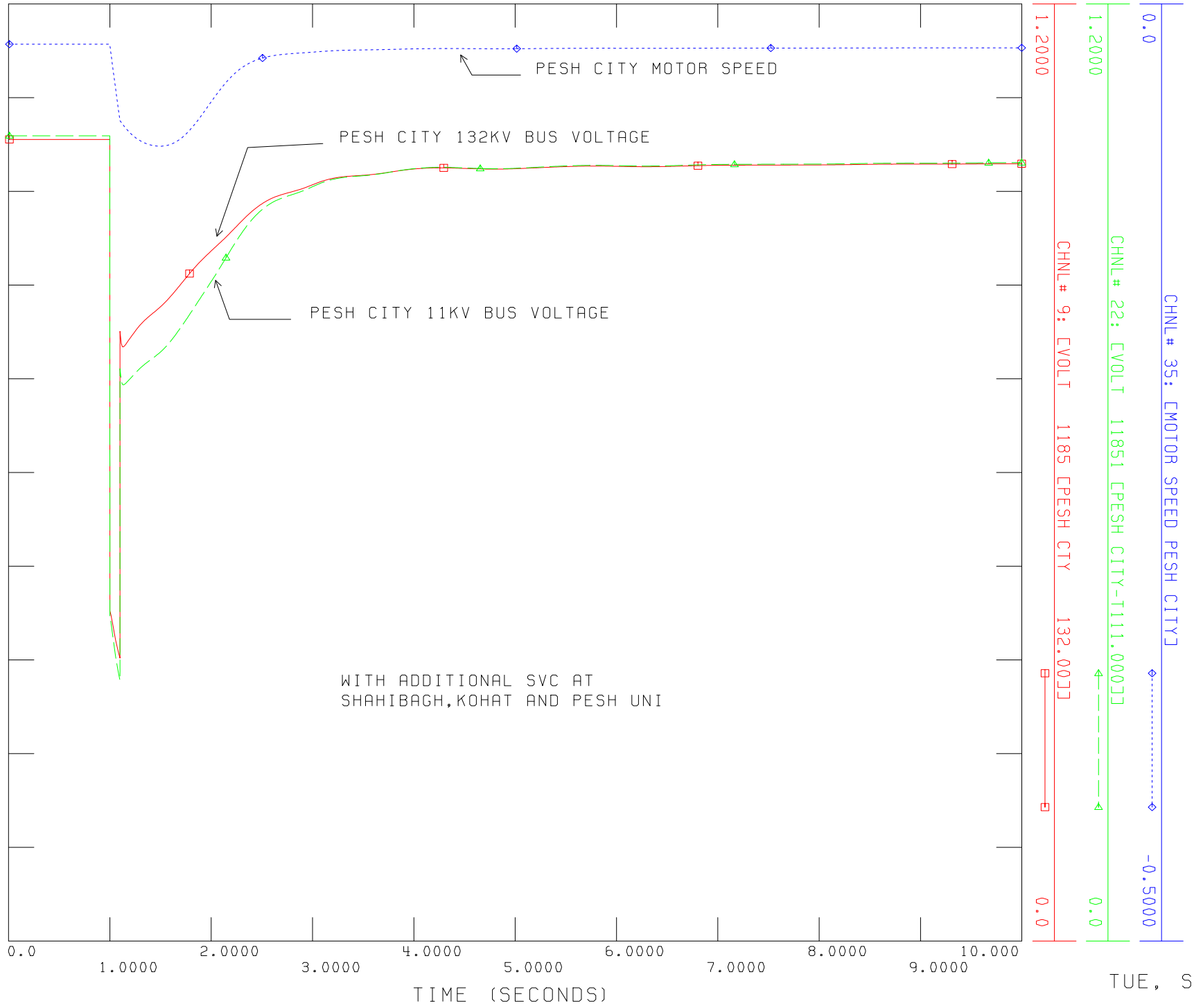

REACTIVE POWER COMPENSATION STUDY OF PESCO SYSTEM
PEAK LOAD JUNE, 2015
THREE PHASE FAULT AT PESHAWAR 500 KV, CLEARED IN 5 CYCLES
TRIP TARBELA-PESHAWAR 500 KV SINGLE CIRCUIT
FILE: ...\STAB\SHBG-KHT-PUNV-SVC-Flt-Pesh-Tarbela-500kV.out

SIEMENS POWER TECHNOLOGIES INTERNATIONAL

TUE, SEP 10 2013 19:55

FIG:4.6

REACTIVE POWER COMPENSATION STUDY OF PESCO SYSTEM
PEAK LOAD JUNE, 2015
THREE PHASE FAULT AT PESHAWAR 500 KV, CLEARED IN 5 CYCLES
TRIP TARBELA-PESHAWAR 500 KV SINGLE CIRCUIT
FILE: ...\STAB\SHBG-KHT-PUNV-SVC-Flt-Pesh-Tarbela-500kV.out

SIEMENS POWER TECHNOLOGIES INTERNATIONAL

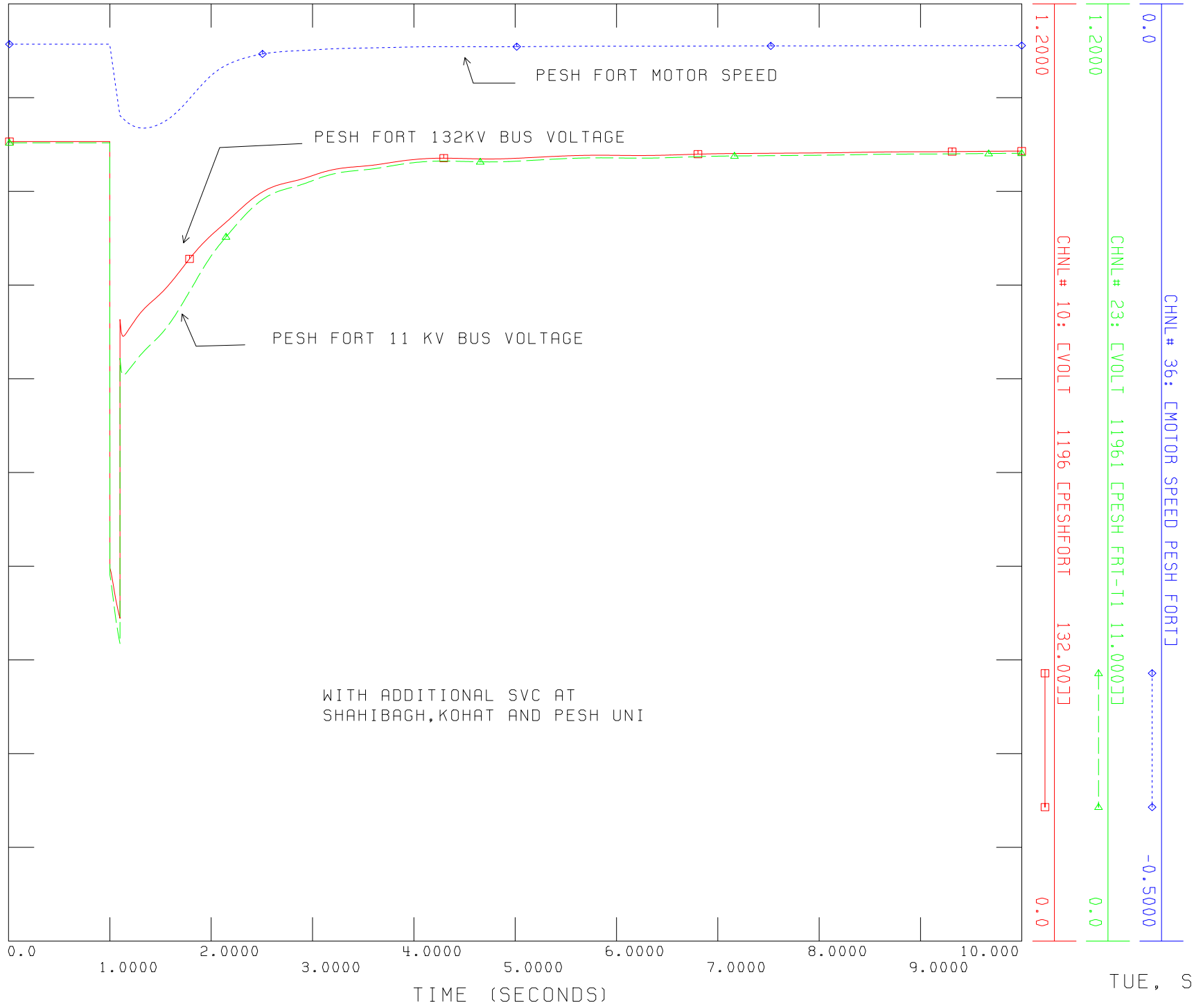

TUE, SEP 10 2013 19:59

FIG:4.7

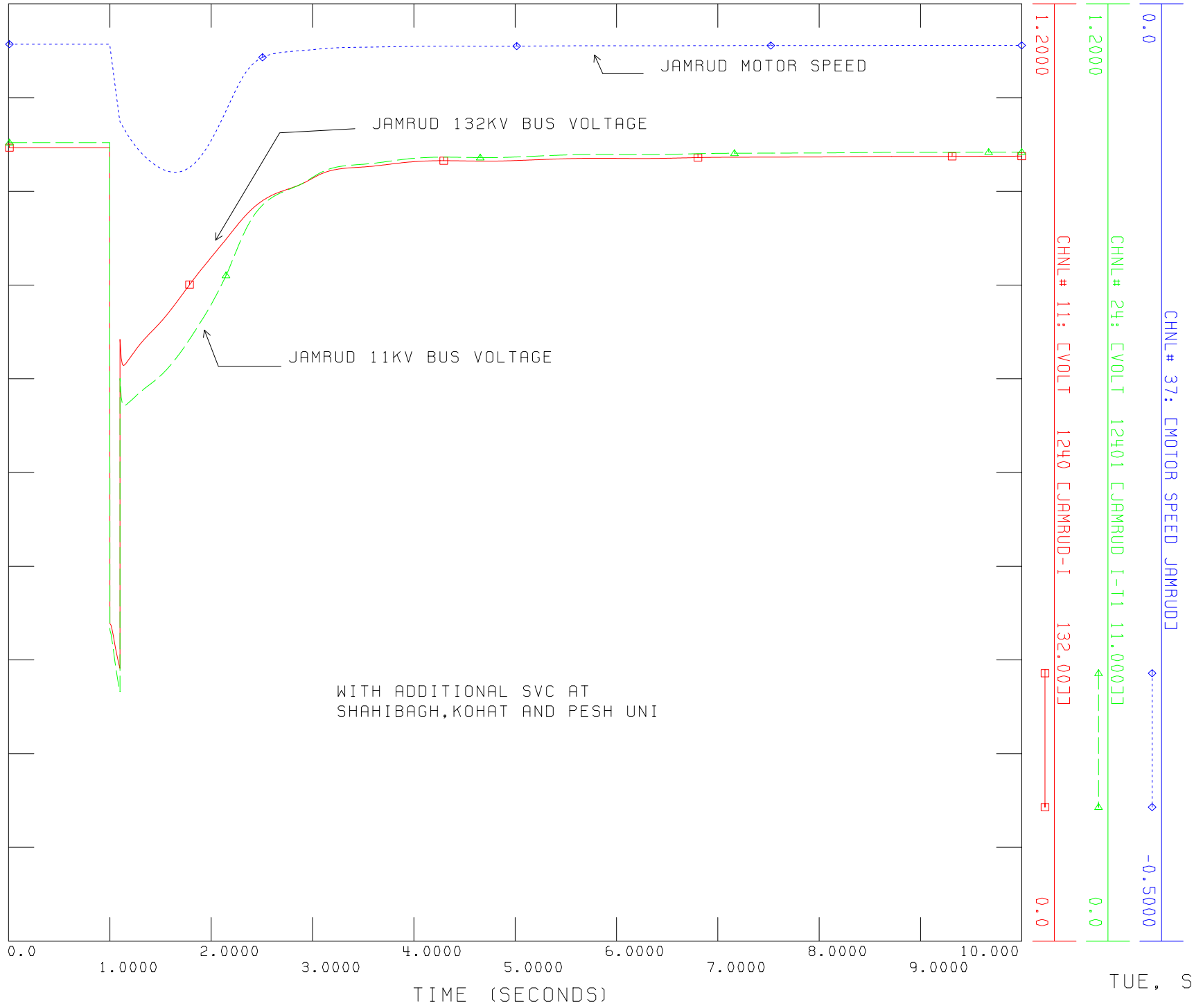

REACTIVE POWER COMPENSATION STUDY OF PESCO SYSTEM
PEAK LOAD JUNE, 2015
THREE PHASE FAULT AT PESHAWAR 500 KV, CLEARED IN 5 CYCLES
TRIP TARBELA-PESHAWAR 500 KV SINGLE CIRCUIT
FILE: ...\STAB\SHBG-KHT-PUNV-SVC-Flt-Pesh-Tarbela-500kV.out

SIEMENS POWER TECHNOLOGIES INTERNATIONAL

TUE, SEP 10 2013 20:03

FIG:4.8

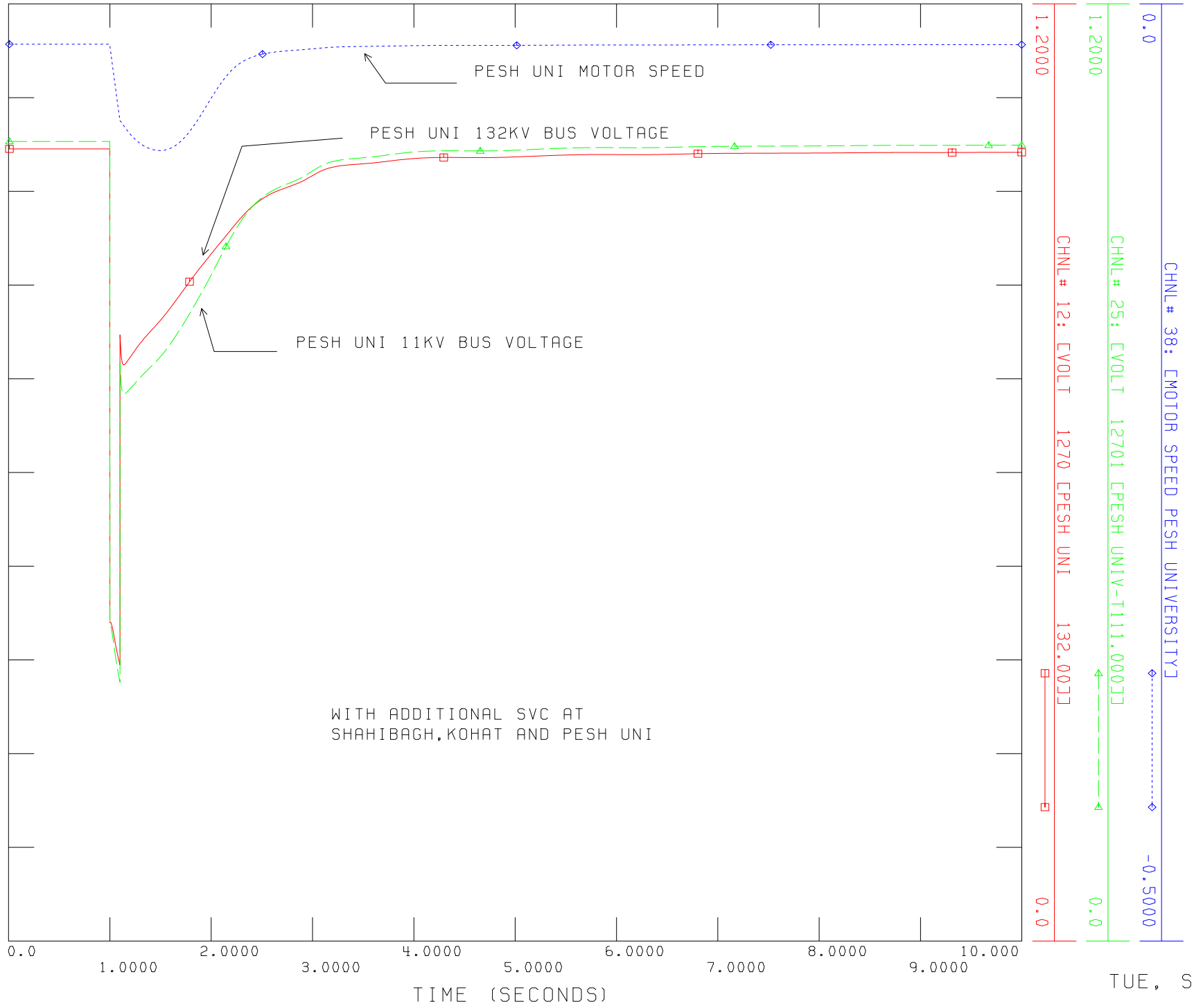

SIEMENS POWER TECHNOLOGIES INTERNATIONAL

REACTIVE POWER COMPENSATION STUDY OF PESCO SYSTEM
PEAK LOAD JUNE, 2015
THREE PHASE FAULT AT PESHAWAR 500 KV, CLEARED IN 5 CYCLES
TRIP TARBELA-PESHAWAR 500 KV SINGLE CIRCUIT
FILE: ...\STAB\SHBG-KHT-PUNV-SVC-Flt-Pesh-Tarbela-500kV.out

TUE, SEP 10 2013 20:23

FIG:4.9

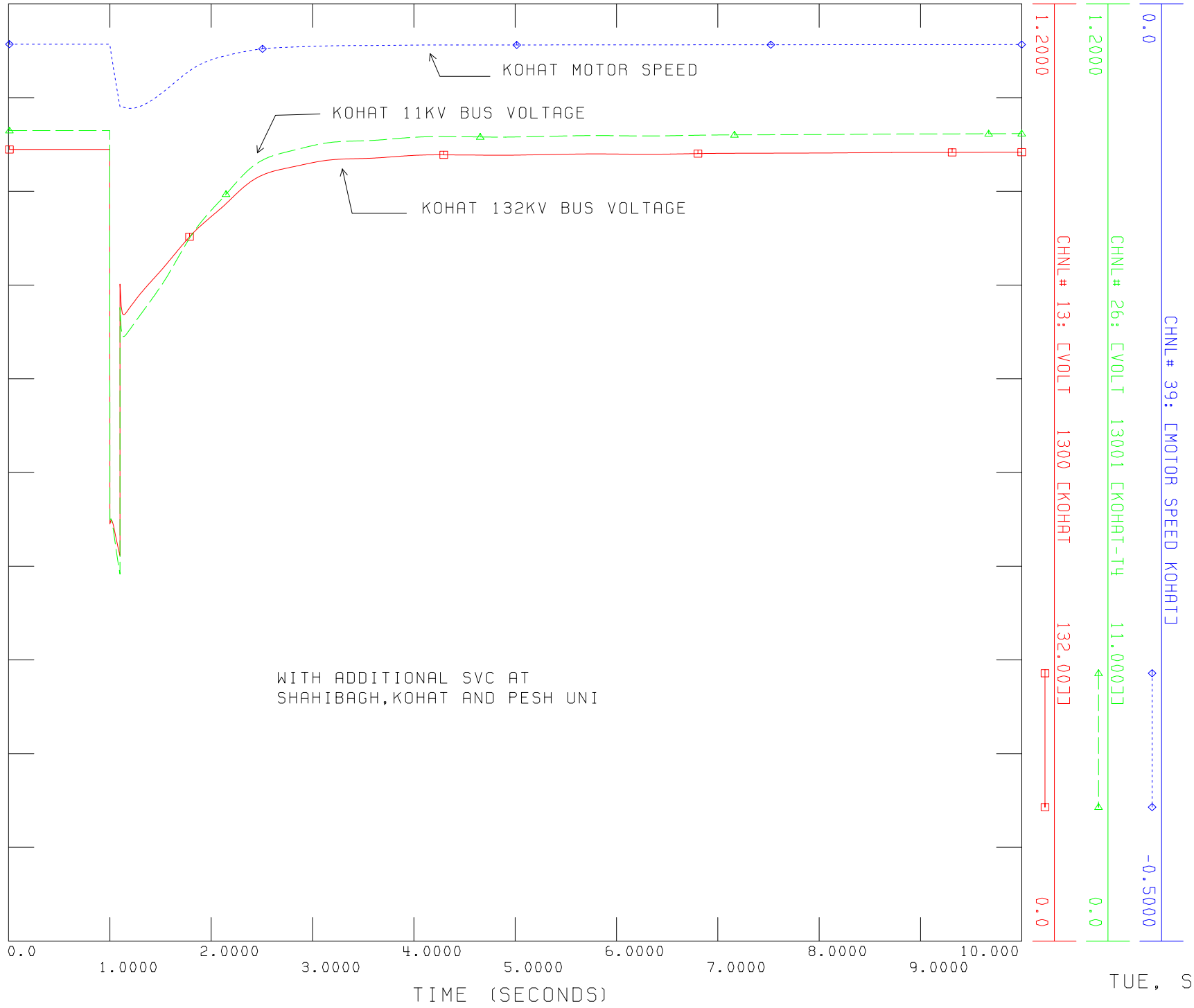

REACTIVE POWER COMPENSATION STUDY OF PESCO SYSTEM
PEAK LOAD JUNE, 2015
THREE PHASE FAULT AT PESHAWAR 500 KV, CLEARED IN 5 CYCLES
TRIP TARBELA-PESHAWAR 500 KV SINGLE CIRCUIT
FILE: ...\STAB\SHBG-KHT-PUNV-SVC-Flt-Pesh-Tarbela-500kV.out

SIEMENS POWER TECHNOLOGIES INTERNATIONAL

TUE, SEP 10 2013 20:10

FIG:4.10

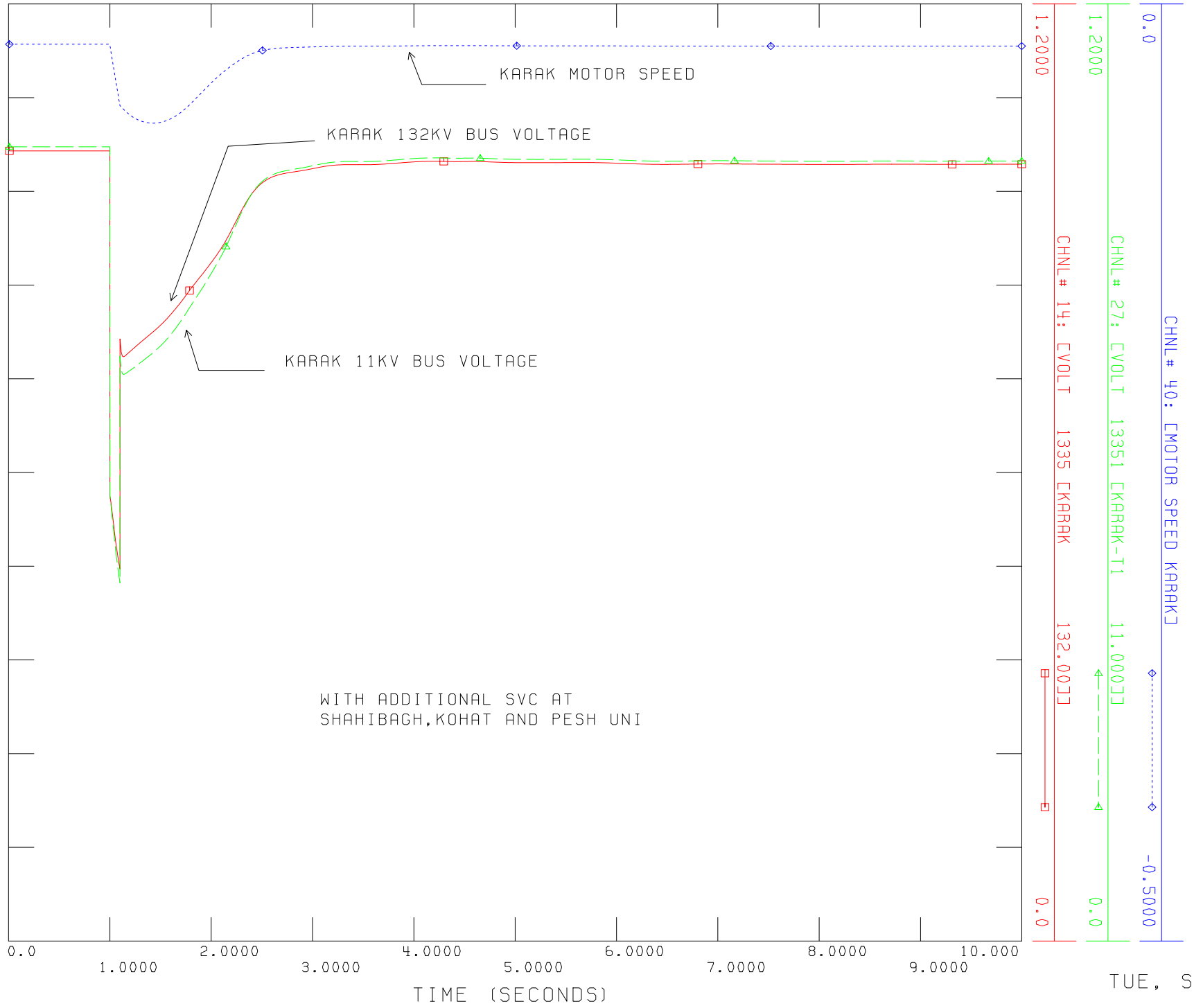

REACTIVE POWER COMPENSATION STUDY OF PESCO SYSTEM
PEAK LOAD JUNE, 2015
THREE PHASE FAULT AT PESHAWAR 500 KV, CLEARED IN 5 CYCLES
TRIP TARBELA-PESHAWAR 500 KV SINGLE CIRCUIT
FILE: ...\STAB\SHBG-KHT-PUNV-SVC-Flt-Pesh-Tarbela-500kV.out

SIEMENS POWER TECHNOLOGIES INTERNATIONAL

TUE, SEP 10 2013 20:15

FIG:4.11

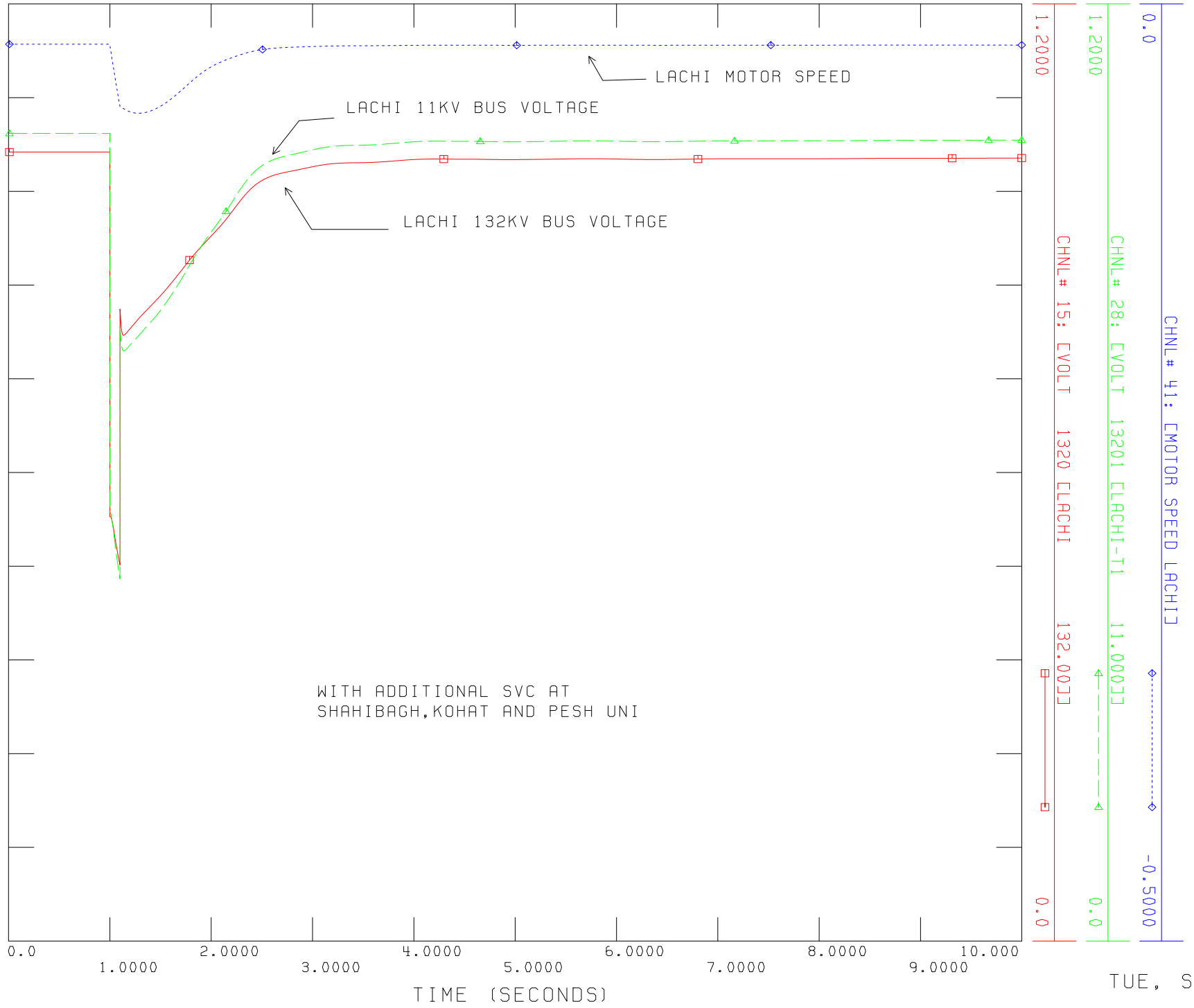

REACTIVE POWER COMPENSATION STUDY OF PESCO SYSTEM
PEAK LOAD JUNE, 2015
THREE PHASE FAULT AT PESHAWAR 500 KV, CLEARED IN 5 CYCLES
TRIP TARBELA-PESHAWAR 500 KV SINGLE CIRCUIT
FILE: ...\STAB\SHBG-KHT-PUNV-SVC-Flt-Pesh-Tarbela-500kV.out

SIEMENS POWER TECHNOLOGIES INTERNATIONAL

TUE, SEP 10 2013 20:26

FIG:4.12

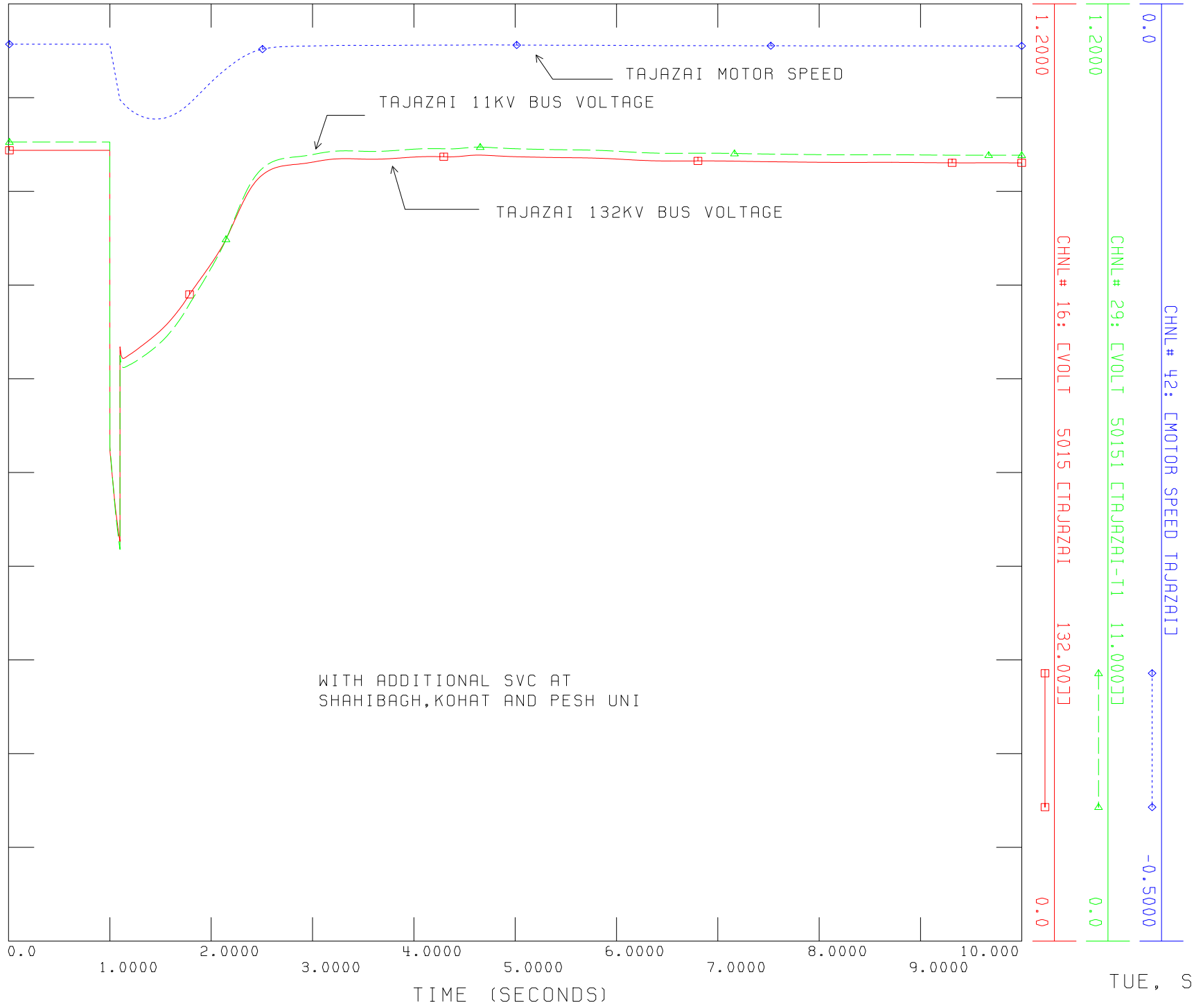

REACTIVE POWER COMPENSATION STUDY OF PESCO SYSTEM
PEAK LOAD JUNE, 2015
THREE PHASE FAULT AT PESHAWAR 500 KV, CLEARED IN 5 CYCLES
TRIP TARBELA-PESHAWAR 500 KV SINGLE CIRCUIT
FILE: ...\STAB\SHBG-KHT-PUNV-SVC-Flt-Pesh-Tarbela-500kV.out

SIEMENS POWER TECHNOLOGIES INTERNATIONAL

TUE, SEP 10 2013 20:36

FIG:4.13

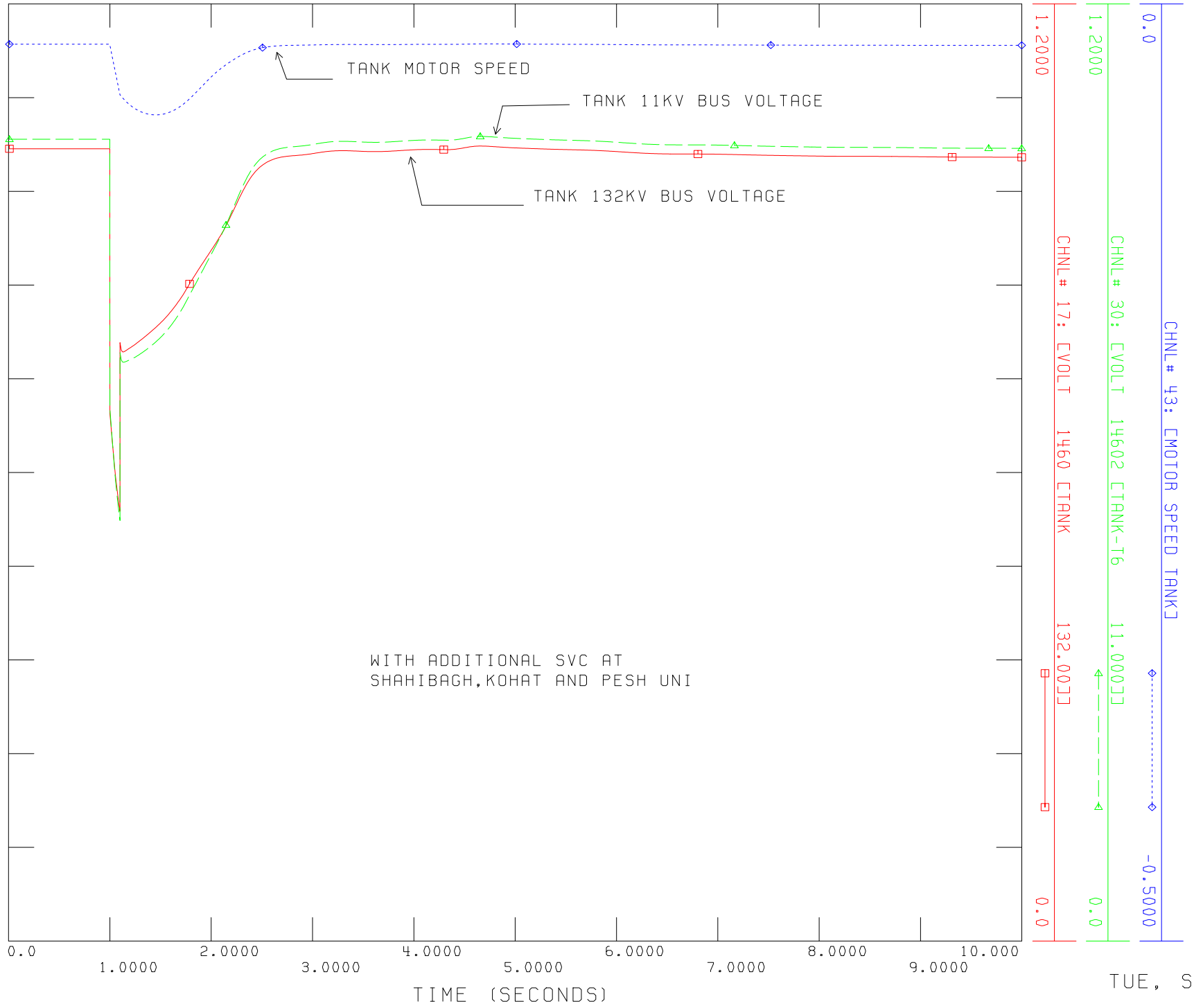

REACTIVE POWER COMPENSATION STUDY OF PESCO SYSTEM
PEAK LOAD JUNE, 2015
THREE PHASE FAULT AT PESHAWAR 500 KV, CLEARED IN 5 CYCLES
TRIP TARBELA-PESHAWAR 500 KV SINGLE CIRCUIT
FILE: ...\STAB\SHBG-KHT-PUNV-SVC-Flt-Pesh-Tarbela-500kV.out

SIEMENS POWER TECHNOLOGIES INTERNATIONAL

TUE, SEP 10 2013 20:39

FIG:4.14

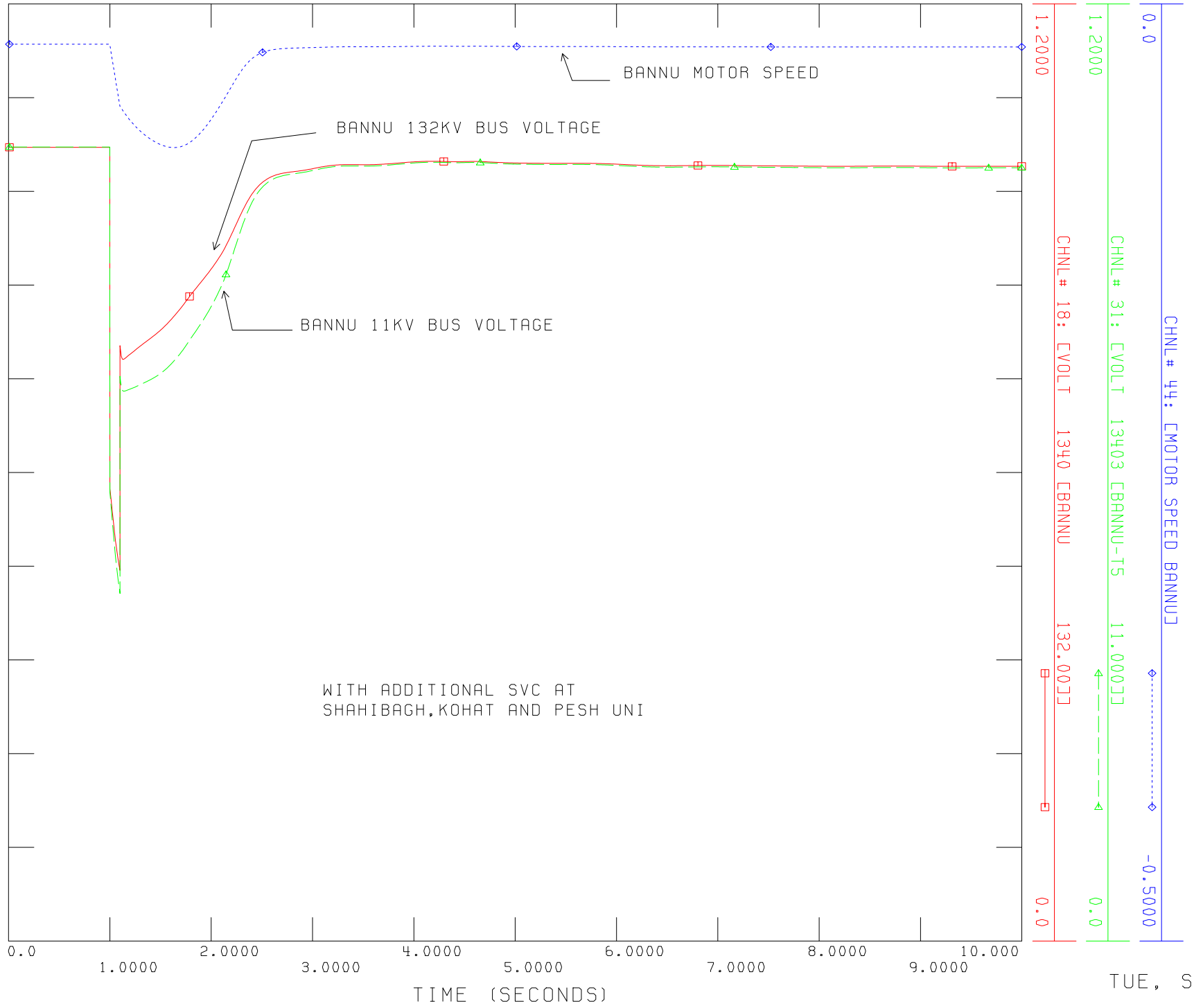

REACTIVE POWER COMPENSATION STUDY OF PESCO SYSTEM
PEAK LOAD JUNE, 2015
THREE PHASE FAULT AT PESHAWAR 500 KV, CLEARED IN 5 CYCLES
TRIP TARBELA-PESHAWAR 500 KV SINGLE CIRCUIT
FILE: ...\STAB\SHBG-KHT-PUNV-SVC-Flt-Pesh-Tarbela-500kV.out

SIEMENS POWER TECHNOLOGIES INTERNATIONAL

TUE, SEP 10 2013 20:42

FIG:4.15

Energy Policy Program
House 4, Street 88, G-6/3, Islamabad, Pakistan
Tel: +92 51 835 7072, Fax: +92 51 835 7071
www.ep-ep.com.pk