ENERGY POLICY PROGRAM

IMPORT OF SURPLUS POWER FROM CENTRAL ASIAN REPUBLICS AND AFGHANISTAN TO PAKISTAN

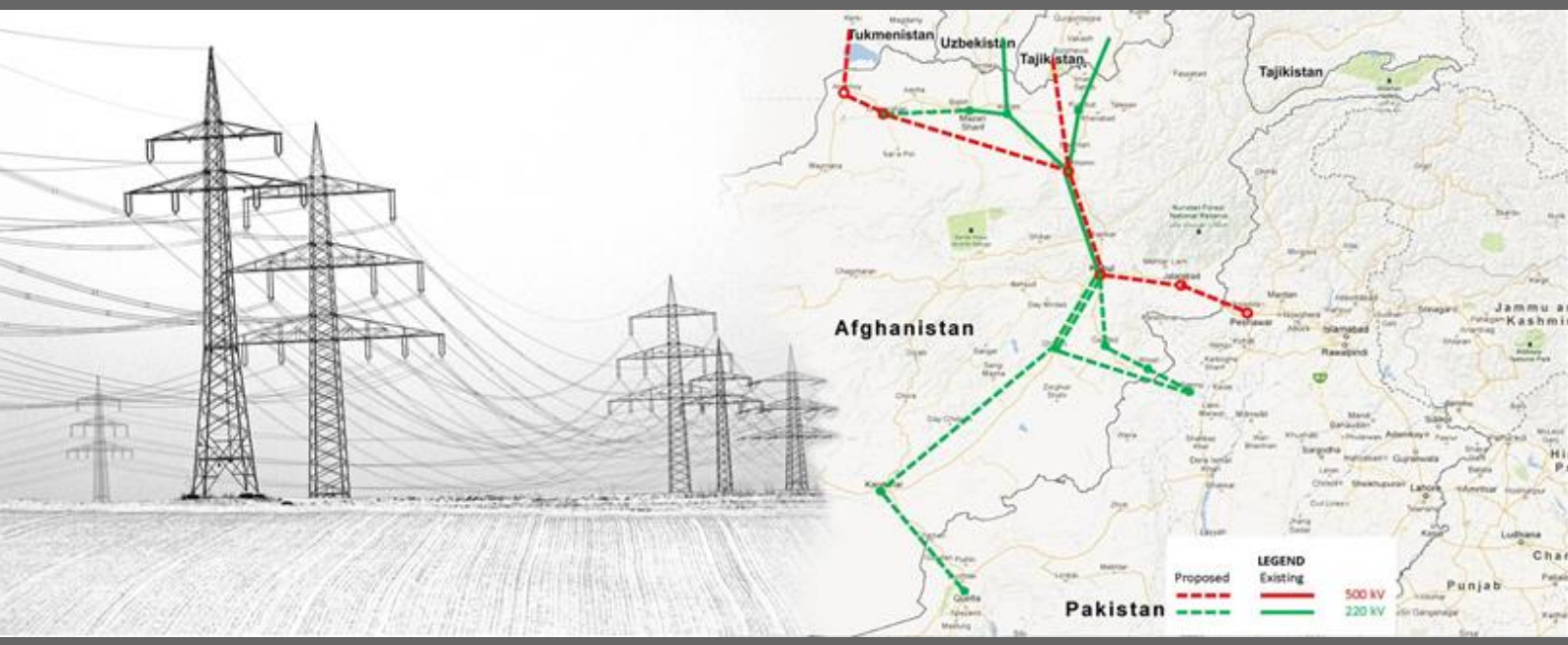

June 2014

This report is made possible by the support of the American People through the United States Agency for International Development (USAID). The contents of this report are the sole responsibility of Advanced Engineering Associates International Inc. (AEAI) and do not necessarily reflect the views of USAID or the United States Government (USG).

ENERGY POLICY PROGRAM

IMPORT OF SURPLUS POWER FROM CENTRAL ASIAN REPUBLICS AND AFGHANISTAN TO PAKISTAN

FINAL DESK STUDY

Contract No: AID-EPP-I-00-03-00004
Order No: AID-391-TO-12-00002

©USAID Energy Policy Program
House 4, Street 88, Sector G-6/3
Ataturk Avenue, Islamabad, Pakistan
Tel: +92 (51) 835 7072, Fax: +92 (51) 835 7071
Email: jhicks@ep-ep.com.pk

Advanced Engineering Associates International

DISCLAIMER

The contents of this report are the sole responsibility of AEAI and do not necessarily reflect the views of USAID or the United States Government (USG).

Contents

Contents i

Acronyms v

Background 1

Executive Summary 2

1. Methodology 5

2. Power Generation and Import/Export Potential of Afghanistan 5

3. Power Import Agreements of Afghanistan with Turkmenistan, Uzbekistan, Iran and Tajikistan 7

3.1 Summary of Power Purchase Agreements 9

4. Power Demand Situation in Kabul Region and Country 10

4.1 Supply-Demand Balance in Afghanistan 10

4.1.1 Domestic Power 10

4.1.2 Imported Power 10

4.1.3 Combined Domestic and Imported Power 10

4.2 Afghanistan Demand and Power Availability 11

5. Power Generation in Uzbekistan, Tajikistan, Turkmenistan and Kyrgyz Republic 13

5.1 Uzbekistan 13

5.2 Tajikistan 13

5.3 Turkmenistan 13

5.4 Kyrgyz Republic 14

5.4.1 Thermal Plants 14

5.4.2 Hydro Plants 15

5.4.3 Committed Plants 16

5.4.4 Thermal Plants 16

5.4.5 Hydro Plants 16

6. Power Imports to Pakistan 17

7. Generation Costs in Pakistan 17

8. Review of Transmission Line Options 18

8.1 Option 1 18

8.2 Option 2 19

8.3 Option 3 19
8.4 Option 4 20
8.5 Option 5 20
8.6 Option 6 21
9. Transmission Lines between Afghanistan and Pakistan (yet to be funded) 21
10. Cost of Imported Power to Pakistan 22
11. Risk Analysis of Importing Power from Afghanistan 23
12. Legal/Regulatory Review and Contracts[9] 23
12.1 Legal/Regulatory Matters 23
12.2 Contracts 25
13. Cost Benefit Analysis 26
13.1 Cost Benefit Calculation 26
13.2 Assumptions: 26
13.3 Calculation of Tariff for Power Delivered to Pakistan 26
13.4 Reduction in Loss to Economy due to Load-Shedding: 26
14. Financial Analysis 27
15. Impact of Import of CAR and Afghanistan Power 29
15.1 Social and Environmental Benefits 29
16. Conclusion and Recommendations 29
Annex I: Power Import to Pakistan (Concept) 33
Annex II: Power Flow Diagram on a Geographical Map 35
Annex III: NTDC Network Geographical Map 37
Annex IV: Afghanistan Demand and Generation Forecast 38
Annex V: ADB Comments on Afghanistan Connectivity 43
Annex VI: Power Purchase Agreements between Afghanistan and CAR Countries 48
Annex VII: Generation, Consumption and Power Export Potential – Per Turkmenistan Plans (Years 2013 – 2020) 51
Annex VIII: North East Power System (NEPS) Afghanistan 52
Annex IX: Existing Afghan Power System 54
Annex X: Conceptual Layout of Transmission Lines and HVAC/DC Converters in CASA-1000 Project 56
Annex XI: Physical Routing of CASA – 1000 Transmission Lines 57

Annex XII: Cost Estimates for Construction of the Proposed Transmission Line Sections between Afghanistan and Pakistan..... 58

List of Tables

Table 1: Existing Power Generation in Kabul Area.....5
Table 2: Key Features of the Existing PPAs.....9
Table 3: Kyrgyz Republic Existing Thermal System.....14
Table 4: Kyrgyz Republic Existing Hydro System.....16
Table 5: Kyrgyz Republic Committed Hydro Plants.....16
Table 6: Kyrgyz Republic 2016 System–Installed Capacity and Annual Energy.....16

Acronyms

AC	Alternating Current
ADB	Asian Development Bank
AEAI	Advanced Engineering Associates International
CAR	Central Asian Republics
CASA	Central Asia/South Asia
CASAREM	Central Asia/South Asia Regional Electricity Market
DABM	Da Afghanistan Breshna Moassassa
DABS	Da Afghanistan Breshna Sherkat
EPP	Energy Policy Program
GWh	Giga Watt Hour
HPP	Hydro Power Plant
HVDC	High Voltage Direct Current
IPP	Independent Power Producer
KPK	Khyber Pakhtunkhwa
kV	Kilo Volts
kWh	Kilo Watt Hour
LRMC	Long Run Marginal Cost
LV	Low Voltage
MEW	Ministry of Energy and Water
MOU	Memorandum of Understanding
MV	Medium Voltage
MW	Mega Watt
MWP	Ministry of Water and Power
NEPRA	National Electric Power Regulatory Authority
NEPS	North East Power System
NTDC	National Transmission and Dispatch Company
PPA	Power Purchase Agreement
SNC-Lavalin	Surveyor, Nenniger & Chenevert Lavalin
SS	Sub Station
TAJ	Tajikistan
TKM	Turkmenistan

TPP	Thermal Power Plant
US	United States
USAID	United States Agency for International Development

Background

Due to a severe shortage of generation capacity, Pakistan is experiencing its worst power crises in years with year-round load shedding of as much as 7000 MW. This crisis is severely hampering economic growth and social development. Put simply, there is an urgent need for reliable, affordable, and sustainable power to support the country's economic growth and employment needs. To mitigate this shortage, Pakistan signed MOUs with Uzbekistan and Turkmenistan to import 1,000 MW of power through Afghanistan. Unfortunately, these MOUs have not progressed to actual power purchase agreements. At present, there are ongoing regional efforts supported by multilateral institutions to set up regional power trading agreements between Central Asian and South Asian countries (CASAREM[1] and CASA-1000[2]). CASA-1000 refers to efforts to import 1000 MW power to Pakistan from Kyrgyzstan and Tajikistan. However, due to legal, commercial, security and infrastructure challenges, these efforts have not successfully resulted in actual deals. To provide more immediate relief, USAID has funded a number of technical assistance and capacity building efforts designed to achieve short and long-term improvements to Pakistan's power system. These activities endeavor to add MW to the Pakistan power grid by improving system governance and operation, and reduce system losses. These improvements, while targeted and beneficial, are insufficient to meet the energy demands of Pakistan's growing economy and population.

[1] Central Asia South Asia Regional Electricity Market
[2] Central Asia South Asia 1000 MW Trade

Executive Summary

To assist The Ministry of Water and Power in meeting Pakistan's chronic energy shortages, USAID-Pakistan directed the Energy Policy Program (EPP) to carry out this Desk Study to evaluate the feasibility of importing power from the Central Asian Republics (CAR) to Pakistan via Afghanistan.

To better understand power import options for Pakistan, it is necessary to briefly discuss the power systems of Uzbekistan, Turkmenistan and Tajikistan. At present, these systems are not interconnected, and operate independently. The power that Afghanistan receives from Uzbekistan, Turkmenistan and Tajikistan is separated in the Afghan grid, and feeds segregated loads. Power generated in Afghanistan, itself, operates and is transmitted independently from imported power. The Afghanistan Power Sector Master Plan proposes to install HVDC back-to-back converters in Afghanistan to provide a means for combining power from these countries. The net result, should these plans be realized, would be much-needed operating flexibility.

This Desk Study has taken all of these facts into consideration, and has identified how Afghanistan's transmission lines that carry power from Turkmenistan to Pakistan could be isolated from the rest of the Afghan grid. Should this occur, Afghanistan could more readily wheel power to Pakistan in the short-term until the HVDC back-to-back converters are installed. This study also emphasizes that it would be necessary for Pakistan to isolate the load fed by imported power from its own indigenous generation. The isolation of imported power from local generation in Pakistan would not be required should Pakistan install HVDC back-to-back converters at the Substation(s) receiving power from Afghanistan.

This study's premise and findings are based on information, analysis and targeted assumptions that account for conditions before all components of the Fichtner Afghanistan Power Sector Master Plan (herein after referred to as the Power Sector Master Plan) are in place. For example, this Desk Study reviewed whether or not current Afghan power grid improvements aimed at increasing power imports from Uzbekistan, Tajikistan and Turkmenistan to Afghanistan (and in the future to facilitate CASAREM) might also supply power to Pakistan on a bilateral basis. This study also reviewed whether Afghanistan's planned 500 kV transmission line connections to Turkmenistan and 220 kV connections to Tajikistan—and its current power purchase agreements with these countries—could be further leveraged to buy additional power from either country to export power to Pakistan. Finally, this study concludes that such a transaction would benefit both Afghanistan and Pakistan. Pakistan would gain much needed power, and the Government of Afghanistan would earn additional revenue from wheeling charges.

To that end, the principal conclusion of this Desk Study, based on a comprehensive review of the generation capabilities of Uzbekistan, Turkmenistan, Afghanistan and Tajikistan, is as follows:

Turkmenistan is the only country in the near future (2016-2018) that could supply an estimated 300 MW of power throughout the year to Afghanistan that could be exported to Pakistan. There are already plans in Turkmenistan to install a new 300 MW[3] dedicated natural

[3] ABD Comments on Afghanistan Inter Connectivity (March17,2013)

gas-fired power plant in Atamyrat with Asia Development Bank funding. This plant would supply 300 MW to Afghanistan over new 500 kV transmission lines. The 500 kV transmission lines between Turkmenistan and Afghanistan are expected to be commissioned by 2017. Once the transmission lines between Afghanistan and Pakistan are completed, it would be possible for Afghanistan to wheel power from Turkmenistan to Pakistan under a future bilateral agreement. Segments of the transmission line inside Afghanistan that are close to Pakistan border are committed to be built by USDoD and AIRF, an additional U. S. $85 million will be required to complete the connection between this transmission line and Pakistan.

This conclusion is contingent upon Afghanistan meeting its own growing electricity needs by increasing power imports from Turkmenistan, Uzbekistan and Tajikistan through existing 220 kV connections; and through increased domestic power production. That being stated, Afghanistan's own hydro generation expansion will take time, and will likely not be available for export in the 2016-2018 timeframe.

To be clear, this conclusion is not a new concept. Rather, there are already long-term plans in place to explore the feasibility of Afghanistan wheeling thermal power from Turkmenistan to Tajikistan to meet Tajikistan's winter power shortages[4].

In addition to power imports from the CAR countries, this Desk Study also reviewed the potential for Afghanistan to supply power to Pakistan when its own indigenous power sources are better exploited. The EPP Study Team met with senior officials from Afghanistan's Ministry of Energy and Water (MEW) and Pakistan's National Transmission and Dispatch Company (NTDC). Both MEW and NTDC indicated their willingness to collaborate substantively in exploring the possibilities that this Desk Study examines.

There are six options for transmitting power from Afghanistan to Pakistan:

1. The Kabul South 500/220 kV Substation to Pule Alam to Gardez 220 kV Substation, Gardez to Khost 220 kV Substation, Khost 220 kV Substation in Afghanistan to Bannu 220 kV Substation in Pakistan indicated in the NTDC Network Map (ANNEX I and ANNEX III).
2. The Kabul South 500/220 kV Substation in Afghanistan to the 500 kV Peshawar II Substation in Pakistan indicated in the NTDC Network Map (ANNEX I, ANNEX II and ANNEX III).
3. The Kabul South 500/220 kV Substation to Arghandi to Gahazni 220 KV Substation, Ghazni 220 kV Substation in Afghanistan to Bannu 220 kV Substation in Pakistan (ANNEX II and ANNEX III)
4. The Kabul South 500/220 kV Substation to Arghandi to Ghazni to Kandahar 220 kV Substation, Kandahar 220kV Substation in Afghanistan to the 220 kV Substation in Quetta in Pakistan indicated in NTDC Network Map (ANNEX I and ANNEX II).
5. Further to above, the other option is to adopt the CASA-1000 interconnection concept and bridge the funding gap. CASA aims to bring power (1300 MW) from Tajikistan to Afghanistan & Pakistan (Peshawar) for 5 months of the year. Cost is estimated at 1 billion USD, scheduled for 2018 completion. Funding gap exists subsequent to ADB withdrawal from CASA project (ADB contribution was equivalent to 40% of project cost).
6. Similarly, the ADB Master plan proposes a 500 kV link from Pule Khumre to Kabul to Peshawar due for completion by 2020-2032. And, there was a 500 link planed between

[4] Islamic Republic of Afghanistan: Power Sector Master Plan: May 2013

Tajuikistan and PuliKhumri in Afgahnistan, but later changed to 220 kV. Converting the planned 220 kV Tajikistan-Pule Kkumre interconnection back to 500 kV and expediting the project completion by 2020, about 1000 MW of Tajikistan and Kirghiz hydro power can be transmitted to Peshawar. The Kirgiz-Tajik 500 kV interconnection planned outside CASA-1000 will need to be accelerated for completion by 2020.

Of these six options, Option 1 is considered the best option based on the following conclusions:

It is the most feasible, least cost and fastest option to bring CAR and Afghanistan power to Pakistan.

Kabul to Gardez transmission line funded by USDoD has already started. Funds needed (about U. S. $45 m USD) for the Gardez-Khost section, were under consideration by AIRF (Afghanistan International Reconstruction Fund). The construction of a double circuit 220 kV line–from Khost to Bannu (160 km approx.) would allow for up to 300 MW of power into Pakistan. The route will be Kabul South to Pule Alam to Gardez to Khost to Bannu. This option provides the shortest distance for new line construction, and relies on utilizing the unstrung part of the Kabul South to Khost transmission line, significantly reducing construction time. This option could be in service by 2017 and would be able to deliver 300 MW.

1. Methodology

This Desk Study is based on meetings and discussions held with senior representatives from Afghanistan's Power Utility Company (DABS), the Ministry of Energy and Water (MEW), the Asian Development Bank in Kabul, Advanced Engineering Associates International's USAID-funded Sheberghan Project Team, Pakistan's Ministry of Water and Power (MWP), NTDC, and a detailed review of the following reports:

1. CASA-1000 Final report - SNC Lavalin (February 2011)
2. Islamic Republic of Afghanistan: Power Sector Master Plan (May 2013)
3. Central Asia Regional Economic Cooperation Power Sector Master Plan, Draft Final Report - Fichtner (October 2012)
4. World Bank Project Information Document Concept Stage of "Central Asia South Asia Regional Electricity and Trade (CASA 1000) Project" (April 2011)
5. ADB Project Data Sheet Project No. 44184-012. Afghanistan and Turkmenistan: Regional Power Interconnection Project (Updated 15 Nov. 2012)
6. Preliminary Assessment for Importing Power from Afghanistan to Pakistan Meeting notes with Afghanistan and ADB Kabul officials (Dated July 3-5, 2012)
7. Import of Power from CAR countries and Afghanistan, Salient features of AEAI team visit to Kabul, Afghanistan (Feb 17-21, 2013)
8. ABD Comments on Afghanistan Inter Connectivity (March17, 2013)

2. Power Generation and Import/Export Potential of Afghanistan

To meet Afghanistan's increasing power demands, significant efforts are under way to increase indigenous generation capacity and increase power imports from its northern neighbors. The following table shows the existing hydro and thermal generation plants in the Kabul area.

Table 1: Existing Power Generation in Kabul Area

S. No.	Name of Plant	Type of Generation	Total Generation Ability (MW)
1	Naghlu Power Plant	Hydel	100
2	Mahipar Power Plant	Hydel	66
3	Surobi Power Plant	Hydel	22
4	Darunta	Hydel	11.5
5	Assassabad	Hydel	0.7
6	Kabul North West Power Plant	Thermal	44.8
7	Tarakhil	Thermal	105
8	Nangarhar	Thermal	2.7

The three principal hydro generation plants that contribute to Kabul's power supply are Naghlu, Mahipar, and Surobi. The Naghlu power plant has four 25 MW units; the Surobi power plant has two 11 MW units; the Mahipar plant has three 22 MW units; and the Darunta and Assabad hydro plants have a generation capacity of about 12 MW.

In addition to these hydro plants, Kabul North West Thermal Power Plant has an installed capacity of approximately 45 MW. However, according to available information, only units 3 and 4 of this plant are online, significantly inhibiting the plant's generation capability. In addition to the 2.7 MW Nagarhar Thermal power plant, a 105 MW diesel power plant was recently commissioned at Tarakhil village northeast of Kabul.

A countrywide list of existing thermal and hydro generation power plants, including planned hydro power plants, is listed in ANNEX IV.

A 400 MW thermal coal-fired power plant is planned in the Bamyan area to supply power to the Aynak copper mines in Afghanistan. Out of the 400 MW capacity of this facility, 200 MW will be supplied to the Afghan power grid, with the remaining power directed to the copper mine, itself. At this time, it is unclear when this power plant will be completed. This plant is a part of a broader copper mine project that is under development by a Chinese firm.

Gas reserves have been reported in the Sheberghan area, and a 200 MW thermal plant is planned to meet the power demand in this region. The plant will be developed and commissioned by private investors, and is expected to be online by 2018.

In addition to Afghanistan's indigenous generation, substantial power is imported from Afghanistan's northern neighbors to meet current demand. From Uzbekistan's Surkhan Substation, 300 MW of power at the 220 kV level is imported to the Naibabad Substation in Afghanistan. There are also plans to import an additional 80 MW from the Surkhan Substation in Uzbekistan at the 110 kV level to Mazar e Sharif in Afghanistan. Tajikistan provides power at the 220 kV level during the summer months through the ADB-financed interconnection from the Sangtuda Substation to the Kunduz Substation in Afghanistan. This 220 kV interconnection can handle up to 300 MW. Afghanistan imports additional power from Tajikistan at the 110 kV level and a smaller amount of power from Turkmenistan at the 110 kV level. There are plans to upgrade these transmission lines to the 220 kV level.

There are advanced plans for Afghanistan to import an additional 300 MW of power from an ADB-financed gas turbine power plant in Atamyrat in the 2016-2018 time frame. This power would be imported, initially, at the 220 kV level to the Andkhoy Substation. The transmission lines, themselves, are designed for 500 kV as planned under Stage A of the Power Sector Master Plan. This upgrade is expected to be completed by 2015. The Andkhoy Substation will be connected to the existing Mazar e Sharif 220 kV Substation through a new Sheberghan 220 kV Substation over transmission lines designed for 500 kV. Under Stage B of the Power Sector Master Plan, these lines would be re-routed from Atamyrat directly to the Pul e Khumri 500 kV Extension Substation. Additionally, a new 500 kV transmission line would be installed between Pul e Khumri and a new 500 kV Substation south of Kabul. 500 MW HVDC back-to-back conversion units would be installed at Pul e Khumri, allowing the power from Turkmenistan and Uzbekistan to mix in the Afghan grid, providing system operation flexibility to DABS. The transmission lines and substations under Stage B of the Power Sector

Master Plan are to be completed by 2020. The ADB is working to bring this date forward and complete Stage B by 2017.

Under Stages C and D of the Power Sector Master Plan, additional HVDC back-to-back converters would be installed at the Pul e Kumri Substation, and a second 500 kV transmission line would be constructed between Pul e Khumri 500 kV Extension Substation and Kabul South Substation. This would allow for additional power imports from Turkmenistan, and provide greater system operation flexibility to DABS. Stages C and D are to be completed by 2025 and 2030 respectively.

Fichtner's Power Sector Master Plan Final Report projects the peak load in Afghanistan to increase by a factor of approximately 4.2 from its 2012 level of 836 MW to 3,502 MW in 2032[5]. Assuming all of Afghanistan's potential indigenous hydro and thermal power plants go online as planned, transmission line upgrades are completed, and planned power imports from neighboring countries are realized, available power would exceed the projected peak load of 3,502 MW. If these conditions are met, Afghanistan would have surplus power for export to Pakistan. ANNEX IV demonstrates that from 2017 onwards there would be surplus energy available in the Afghan grid relative to anticipated demand. Furthermore, Afghanistan's peak demand occurs in December, dramatically decreasing during summer months. In contrast, Pakistan's peak demand occurs in July.

Based on the above data points, this Desk Study concludes that Afghanistan's best opportunity for selling power to Pakistan in the near future—and earning significant revenues from wheeling charges—is for it to import 300 MW from Turkmenistan's Atamyrat power plant and export it to Pakistan. As ANNEX V demonstrates, the ADB will install 500 kV transmission lines and substations between the Atamyrat power station in Turkmenistan and the Kabul South 500 kV Substation. This installation would include back-to-back HVDC converters at Pule Kumri by 2017. Several options are available to transmit power between Afghanistan and Pakistan. These options are discussed in the "Transmission Lines between Afghanistan and Pakistan (yet to be funded)" section of this Desk Study.

3. Power Import Agreements of Afghanistan with Turkmenistan, Uzbekistan, Iran and Tajikistan

Since 2002, Afghanistan's MEW and DABS have signed five PPAs, in various forms, with the CAR Countries. These agreements allow for substantial seasonal power imports, and have the potential to accommodate more power. Cooperation between Afghanistan, Tajikistan, Turkmenistan and Uzbekistan in power imports, exports and transmission interconnections has been excellent, providing benefits to all of the countries involved. Specifically, Afghanistan presently imports power under[6] the following agreements:

[5] Islamic Republic of Afghanistan: Power Sector Master Plan: May 2013
[6] Islamic Republic of Afghanistan: Power Sector Master Plan; May 2013

- Two PPAs with Tajikistan, through a 110 kV line from the Geran Substation in Tajikistan to the Kunduz Substation in Afghanistan; and from the Sangtuda HPP in Tajikistan via double circuit 220 kV line to the Kunduz Substation in Afghanistan;
- Two PPAs with Turkmenistan, through a 110 kV line from the Zernow Substation in Turkmenistan to Andkhoy in Afghanistan; and the Marry Substation in Turkmenistan to the Tourrgundi in Herat;
- One PPA with Uzbekistan, through the Surkhan Substation to the Hairatan (Afghanistan) interconnection; and
- Two PPAs with Iran for import of power to Herat and Nimruz Substations.

In addition, Afghanistan plans to sign another PPA with Uzbekistan that would allow for the import of 80 additional MW of power. Details of the Power Purchase Agreements are provided in ANNEX VI.

3.1 Summary of Power Purchase Agreements

The key features of the existing PPAs are summarized in the table, below.

Table 2: Key Features of the Existing PPAs

Country	Contract Term (from – extended – to)	Supply	Tariff (U. S. cents/kWh)
Iran	2003 – 2007 – 2015	Firm	3.0
Tajikistan 110 kV 220 kV from Sangtuda HPP	2003 – 2009 – 2015 Phase I: 2010 – 2015 Phase II: 2015 - 2030	Non-firm Firm (summer only)	2.0 Ph. I: 3.5 Ph. II: to be negotiated
Turkmenistan 2 separate but similar contracts	2002 – annual amendments	Firm	2.8
Uzbekistan	n/a	Firm	6.0

Several features of these contractual arrangements can benefit Pakistan.

1. While not all of the PPAs provide for firm delivery (in some cases, delivery quantities are agreed each year), historic performance confirms that significant power deliveries to Afghanistan from these countries have been consistent;
2. Delivery of power is available at different times of the year, contingent on expanded generation capacity or new generation capability and transmission infrastructure; and
3. The prices paid by Afghanistan for power imports are quite reasonable by regional standards.

The EPP Study Team held several meetings with key Afghani officials at the Ministry of Water and Power, DABS, USAID Kabul, and ADB-the key multilateral institution that provides financing for transmission development in Afghanistan and throughout the region.

These discussions indicate:

1. There is significant potential for the existing PPAs to be expanded in terms of the quantities of power available for import into Afghanistan;
2. There is potential for Afghanistan to enter into *new* PPAs with the CAR Countries for additional power imports;
3. The further quantities involved would be *surplus* to Afghanistan's requirements; and
4. Afghanistan is keen to pursue opportunities to export these surplus quantities to Pakistan in order to earn significant revenues from wheeling charges.

4. Power Demand Situation in Kabul Region and Country[7]

Kabul, with a fast growing population of 4 to 5 million, faces an unreliable power supply due to years of war, poor maintenance and general chaos. Lack of development of the power supply infrastructure has also compounded the problem of electricity supply. The power distribution system in the Kabul region is dilapidated, and in order to absorb the available power required in the future, it is imperative to rehabilitate and upgrade the existing distribution system. A number of initiatives are under way to improve the distribution network in Kabul, including projects that will upgrade the Kabul city medium voltage (MV) system. The low voltage (LV) system rehabilitation, and the installation of new substations, is also under way. Additional efforts are planned to expedite the implementation of distribution projects so that load shedding in Kabul can be minimized. Similar efforts will be required to rehabilitate and improve the distribution system in other parts of the country in the future.

From data available on the loading of existing substations, the maximum total load in the Kabul region for 2010 was 197 MW. However, this figure does not represent the *full* power demand of Kabul. The actual demand in Kabul and surrounding areas may, in fact, be suppressed.

Regarding electricity demand going forward, a number of forecasts are available. The Power Sector Master Plan projects that the demand for electricity in the Kabul region was approximately 441 MW in 2012, and will increase to roughly 1,216 MW by 2032. The forecast for the entire country was 836 MW in 2012, projected to increase to 3,502 MW by 2032.

4.1 Supply-Demand Balance in Afghanistan

4.1.1 Domestic Power

When all the power plants identified in ANNEX IV are rehabilitated, and all new planned power plants are commissioned, domestic installed capacity will increase to approximately 2,970 MW by 2023. An additional 400 MW will be available from the privately developed Aynak and Sheberghan power plants.

4.1.2 Imported Power

Regarding power imports from neighboring countries, if the planned 500 kV transmission lines and HVDC back-to-back converters identified under Stage D of the Power Sector Master Plan are commissioned, import capacity, including seasonal summer power from Tajikistan, will increase to roughly 1,300 MW. At present, Stage D of the Power Sector Master Plan is to be completed by 2032.

4.1.3 Combined Domestic and Imported Power

Combining all of the imported and local power feeding into Afghanistan's system by installing HVDC back-to-back converters would increase total capacity to roughly 5,659 MW.

[7] Central Asia-South Asia Electricity Transmission and Trade (CASA-1000) SNC-Lavalin International Inc.

Assuming that the power demand forecast is 3,502 MW by 2032, and taking into account that projected generation supply available in that year is expected to be 5,659 MW, it is evident that Afghanistan would have surplus capacity of approximately 2,157 MW. This assumes that all planned new projects and existing rehabilitation efforts are completed on time.

It is important to note that the above analysis was carried out on the basis of installed capacities of existing and planned power plants. The available capacity of the hydro plants depends largely on water flows, and due to natural uncertainty in this regard, will vary from the installed capacity. For example, water flows are relatively high in the summer months, leading to higher generation capacity during this season. Similarly, due to forced outages, high diesel costs and inefficiencies associated with the thermal plants, the available capacity of thermal plants will inevitably vary as well. To that end, available capacity will be somewhat less than installed capacity, varying periodically due to the factors outlined above.

In view of Afghanistan's current situation, and the constraints associated with financing and development of projects, an element of uncertainty exists with capacity development. However, even taking into consideration the uncertainties associated with the demand forecast and projected capacity developments, the Study Team concludes that Afghanistan would have surplus capacity by the year 2018.

4.2 Afghanistan Demand and Power Availability

Assuming that the power system expansion plans are executed on schedule and in their entirety, the following graph depicts power available in the country against the computed peak demand. This graph is based on data available in ANNEX IV.

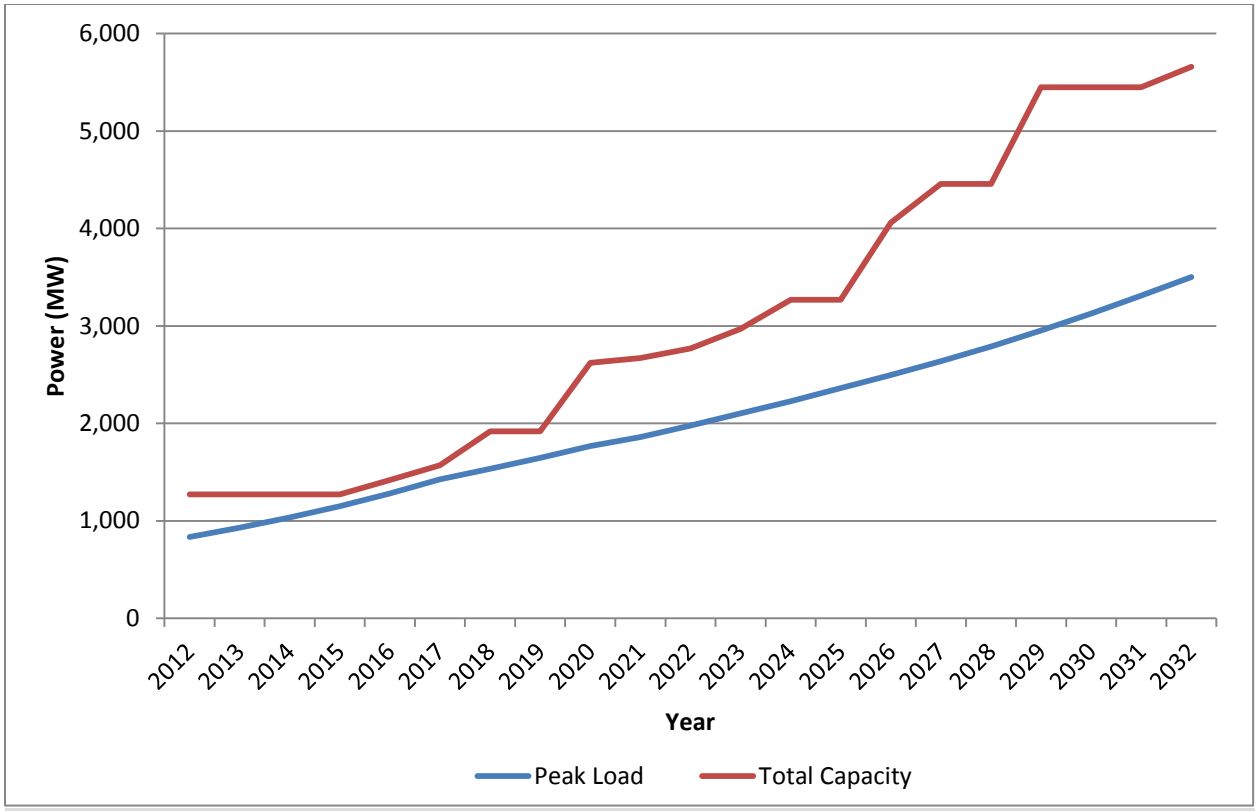

Figure 1: Afghanistan Demand versus Power Availability in Afghanistan

5. Power Generation in Uzbekistan, Tajikistan, Turkmenistan and Kyrgyz Republic

5.1 Uzbekistan

Uzbekistan has an installed generation capacity[1] of 10,660 MW from thermal and 1,807 MW from hydro. Uzbekistan produces about 50,000 GWh of electricity per year, with approximately 86% of it coming from thermal sources and 14% from hydro plants. Almost all the power plants in Uzbekistan are outdated. They average more than 30 years old, and all are in need of substantial rehabilitation. Given that almost 90% of Uzbekistan's power production is thermal, maintenance requirements are high. The grid voltages are 500 kV, 220 kV and 110 kV. In addition to these existing power plants, there are plans to install a 900 MW expansion of Talimardjan TPP, a 476 MW combined-cycle gas power plant at Navoi, and a 370 MW combined-cycle gas power plant at Tashkent.

Currently, Uzbekistan supplies more than 300 MW of electricity to Afghanistan each year. The bulk of this power is supplied to Afghanistan at the 220 kV level from the Surkhan Substation in Uzbekistan to Naibabad in Afghanistan, and smaller amounts at the 110 kV level to Mazar e Sheriff in Afghanistan. The power is supplied under a PPA that is detailed in ANNEX VI. This imported power is expensive compared with the power imported from Tajikistan or Turkmenistan. There are no known plans to increase imports from Uzbekistan.

5.2 Tajikistan

In Tajikistan, hydro resources dominate domestic power generation. The five major power plants feeding into the 500 kV, 220 kV and 110 kV grids provide more than 90% of the annually-generated electricity. In addition to hydro generation, there are two thermal power plants feeding into the grid at the 220 kV and 110 kV levels. The total capacity of the hydro plants is 4,636 MW, and total capacity of the thermal plants is 318 MW. In addition to existing power plants, there are plans to add two new hydro plants: the Sangtuda HPP 2, consisting of two 110 MW units each; and the Rogan HPP Project, consisting of six units, each generating 600 MW with a combined capacity of 3,600 MW. In the initial phase, only two of the Rogan units will be operational, generating 400 WM each.

Tajikistan produces most of its power during summer months, when sufficient water is available from melting ice and snowcaps in the mountains. In summer, when there is insufficient domestic power demand water is diverted to the spillways of the dams. Additional transmission capacity could enable additional power export rather than spilling water during this period.

Currently, Tajikistan supplies power at both 110 and 220 kV voltages to Kunduz Substation in northeastern Afghanistan. The power purchase details are included in ANNEX VI.

5.3 Turkmenistan

Turkmenistan has an installed capacity of 4,104 MW. This power is mostly generated by seven power stations: Mary (Southern Turkmenistan); Turkmenbashy and Balkanabat (both

located in western Turkmenistan); Abadan (central Turkmenistan); Seydy (eastern Turkmenistan); the Hindigush hydroelectric station (southern Turkmenistan); and a power plant on the outskirts of Ashgabat. The Mary power station is the largest plant in the country, with an installed capacity is 1,250 MW. There are plans to add three more power plants with a combined capacity of 1,122 MW, and to improve the transmission and distribution systems throughout the country. Turkmenistan produces surplus power and exports it to Turkey, Iran and Afghanistan.

ANNEX VII depicts Generation, consumption and power export potential per Turkmenistan Plans (Years 2013-2020)

Turkmenistan currently exports power to northern sections of Afghanistan at the 110 kV level from the Zernov Substation to Andkhoy. There are plans to upgrade these lines to 220 kV. This power is supplied under a power purchase agreement that is detailed in ANNEX.

In addition to this sale of power, there are advanced plans for Turkmenistan to supply an additional 300 MW to Afghanistan from a new, natural gas-fired power plant funded by the ADB. This power would be delivered at the 220 kV level to the Andkhoy Substation over transmission lines designed to operate at the 500 kV level. There are plans under Stage B of the Power Sector Master Plan to re-route this transmission line from Atamyrat to a new Pul e Khumri 500 kV Extension Substation, and to operate it at the 500 kV level. There are further plans to install Kabul South 500/220 kV Substation, and connect Pul e Kumri 500 kV Extension Substation and Kabul South 500 kV Substation with a new 500 kV transmission line. Finally, there are plans to install 220 kV transmission lines from Kabul South Substation to Kandahar.

The cost details of the power to be purchased from the new 300 MW plant are not known at this stage.

5.4 Kyrgyz Republic[8]

The Kyrgyz Republic's existing system is mainly hydro (2,910 MW, 85%), with some thermal plants (530 MW, 15%) providing the extra energy in dry seasons and peak periods.

5.4.1 Thermal Plants

The thermal system consists mostly of the Bishkek plant, with a minor contribution from the Osh plant. These plants are old and with very high variable cost, mainly used during winter. The capacities shown reflect the projected rehabilitation and the maximum attainable energy production. The use of old thermal generation plants to increase the level of firm power to be delivered can be determined when contracts are negotiated.

Table 3: Kyrgyz Republic Existing Thermal System

Plant Name	Installed Capacity (MW)	Annual Energy (GWh)
Bishkek	495	3,400
Osh	35	190

[8] SNC- Lavalin Central Asia-South Asia Electricity Transmission and Trade (CASA-1000) Project Feasibility Study Update

Plant Name	Installed Capacity (MW)	Annual Energy (GWh)
Total	**530**	**3,590**

5.4.2 Hydro Plants

The hydro system relies on the Toktogul reservoir and hydro power plant (1,200 MW, 5,110 GWh/year). Downstream plants benefit from Toktogul hydro power plant outflow as a regulated inflow, and provide a considerable amount of annual energy (7,235 GWh).

Table 4: Kyrgyz Republic Existing Hydro System

Plant Name	Type	Installed Capacity (MW)	Annual Energy (GWh)
Toktogul	Reservoir	1,200	5,110
Kurpsai	Run-of-River	800	3,315
TashKumyr	Run-of-River	450	1,895
Shamaldysai	Run-of-River	240	935
Ush-kurgan	Run-of-River	180	950
At-Bashi	Run-of-River	40	140
Total		**2,910**	**12,345**

5.4.3 Committed Plants

In this present study, new additional generation expansion, apart from new committed plants, is not considered. However, plants that are committed for development and would be commissioned prior to 2016 are taken into consideration as they would constitute a part of the existing system in 2016.

5.4.4 Thermal Plants

The Kyrgyz Republic has no thermal commitments or rehabilitations of plants prior to 2016.

5.4.5 Hydro Plants

Work has already started on the Kambarata 2 HPP and the first unit of 120 MW is expected to be commissioned before January of 2016.

Table 5: Kyrgyz Republic Committed Hydro Plants

Plant Name	Type	Installed Capacity (MW)	Annual Energy (GWh)
Kambarata 2	Run-of-River	120	800

With the addition of this plant, the total capacity of the Kyrgyz system in 2016 would be:

Table 6: Kyrgyz Republic 2016 System–Installed Capacity and Annual Energy

Type	Installed Capacity (MW)	Annual Energy (GWh)
Hydro Plants	3,030	13,145
Thermal Plants	530	3,590
Total	**3,560**	**16,735**

6. Power Imports to Pakistan[9]

The electricity sector of Pakistan is facing acute shortages in supply, which have led to power outages on a massive scale. The wide fluctuation of international oil prices, higher costs due to gradual phasing out of subsidies and the circular debt dilemma have exacerbated the situation. This has created increased political and economic instability, and has stifled much-needed foreign direct investment.

The Government of Pakistan is employing diverse measures to address the problem of capacity shortages. These include expansion and refurbishment of existing plants, introduction of new private power plants, encouraging renewable energy exploitation, development of rental power plants, and acquisition of power from captive power plants.

At the end of Pakistan's Fiscal Year 2008/09, total installed generation capacity was 20,306 MW, of which 13,370 MW was thermal, 6,474MW hydro, and 462 MW nuclear. Current estimates indicate that over 90,000 MW of generation capacity will be required by 2030. Even with identified potential plants coming online, there will be a roughly 10,000 MW deficit by 2030. In view of the huge capital requirements and institutional issues, it will be difficult to build all the additional generation capacity required. In particular, for large-scale coal-fired and hydro plants, significant investments will be required upfront. As an example, during the Fiscal Year 2015/16, Pakistan's generation plan suggests the commissioning of an additional 8,900 MW, which will require a massive capital investment. The substantial lead times for the construction of additional power plants may also result in delays in acquiring additional capacity. The likelihood of delays in commissioning of these projects cannot be ignored.

Given the above-described conditions, power imports through CASAREM can benefit Pakistan. However, developing CASAREM will take time. As a result, a bilateral arrangement with Afghanistan to buy imported power from Turkmenistan, Tajikistan and Uzbekistan (or Afghanistan's own surplus power) would provide an attractive, short-term opportunity to mitigate Pakistan's power crisis.

7. Generation Costs in Pakistan

SNC-Lavalin, in their Central Asia-South Asia Electricity Transmission and Trade (CASA-1000) Project Feasibility Study Update, estimate the price for firm energy to be 13.2 US cents/kWh; and the price for non-firm energy as 9.2 US cents/kWh. These prices are estimated based on the total levelized variable charges and the total levelized tariff of IPPS determined by NEPRA as of 30 June 2009.

[9] Central Asia-South Asia Electricity Transmission and Trade (CASA-1000) SNC-Lavalin International Inc

8. Review of Transmission Line Options

ANNEX VIII represents a Single Line Diagram of the existing Afghanistan 220 kV national Grid, commonly referred to as NEPS. At present, NEPS is divided into three segments to accommodate the power imports from three different countries as indicated in Annex 5.3.3-1 of the Power Sector Master Plan (ANNEX IX). The local generation also operates in an island mode, feeding segregated loads. There are plans under the Power Sector Master Plan for NEPS to be reinforced and upgraded by the addition of 500 kV transmission lines. This would facilitate increased power imports from Turkmenistan and Tajikistan to northern areas of Afghanistan, as well as to Kabul, southern Afghanistan, and possibly Pakistan. These reinforcements are detailed in Stages A, B, C and D in Power Sector Master Plan.

The ADB plans to fund new 500 kV and 220 kV Substations at Atamyrat, a 500 kV transmission line from Atamyrat to Pule Khumri Extension Substation, the Pule Khumri 500 kV extension Substation, a 500 kV transmission line from Pule Khumri 500 kV Extension Substation to 500/220 kV Kabul South Substation, and the 500/220 kV Kabul South Substation.

The transmission lines shown in the attached Single Line Diagram entitled, *Power Import to Pakistan*, (concept) (ANNEX I) indicates the transmission lines and substations that would be required to import power from Turkmenistan to Pakistan.

A power flow diagram on a geographical map is also attached (ANNEX II).

The commissioning of the 500 kV link from Atamyrat (Turkmenistan) to the Pule Khumri 500 kV Extension Substation, and double circuit 500 kV transmission line extending from Pule Khumri 500 kV Extension Substation to the 500/220 kV Kabul South Substation, would bring additional power up to the 500/220 kV Kabul South Substation.

Beyond the 500/220 kV Kabul South Substation, there are six options available for extending power transmission lines to import power to Pakistan. They are:

8.1 Option 1

1. Kabul South 500/220 kV Substation to Pule Alam to Gardez 220 kV Substation.
2. Gardez to Khost 220 kV Substation in Afghanistan.
3. Khost 220 kV Substation in Afghanistan to Bannu 220 kV Substation in Pakistan indicated in the NTDC Network Map (ANNEX I and ANNEX III).

Construction of a single strung double circuit 220 kV line from Kabul South Substation to Gardez is being undertaken by USFOR-A, with expected completion by 2014. Funding is anticipated for the Gardez to Khost section of the transmission line by 2014.

This option utilizes the unstrung portion of the circuit between the Kabul South 500/220 kV Substation and the Khost Substation, and installs new transmission lines between the Khost and Bannu Substations.

- The 220 kV Bannu Substation is the nearest to Khost, relative to other possible interconnections in Pakistan. Linking the Khost and Bannu 220 kV Substations is the most feasible option for delivery of up to 300 MW of power to Pakistan.

- The aerial distance between the two stations is approximately 80 km, but the road distance is roughly 160 km because of difficult terrain. The actual length of the transmission line would be somewhere between the aerial and road distances. A better estimate of the transmission line's length could be estimated at the detailed feasibility stage.
- The construction of a double circuit 220 kV line–from Khost to Bannu (160 km approx.)—would allow for up to 300 MW of power into Pakistan. The route will be Kabul South to Pule Alam to Gardez to Khost to Bannu.
- Kabul to Gardez transmission line funded by USDoD has already started. Funds needed (about $45 m USD) for the Gardez-Khost section, were under consideration by AIRF (Afghanistan International Reconstruction Fund).

Under this option, NTDC would need to make alternate arrangements for evacuating power from existing generation plants in the area, and would have to operate incoming power in island mode until the Afghan and Pakistani grids are synchronized. Load segregation could be avoided if NTDC installs an HVDC converter at Bannu Substation.

8.2 Option 2

Kabul South 500/220 kV Substation in Afghanistan to 500 kV Peshawar II Substation in Pakistan indicated in the NTDC Network Map (ANNEX I, ANNEX II and ANNEX III).

This option is outlined in Stages B, C and D of the Power Sector Master Plan, and is to be undertaken from 2025-2032. If this project could be fast-tracked, it would serve as the best option. In theory, this option could facilitate power flow of up to 1,000 MW to Peshawar, the load center and capital city of the KPK Provence. Under this option, a back-to-back converter would be installed in Peshawar, which would electrically isolate the Afghan and Pakistani power systems, and allow local generation in Pakistan such as the Tarbela Hydro Power Station to operate in parallel with imported power. This would provide operating flexibility for the Pakistani grid. This option would also allow power generated at Tarbela to be diverted to other regions of Pakistan. This offers a much larger capacity but will take longer. May be considered as second Phase to wheel CAR power to Pakistan will be via Kabul – Peshawar.

8.3 Option 3

1. Kabul South 500/220 kV Substation to Arghandi to Gahazni 220 KV Substation in Afghanistan.
2. Ghazni 220 kV Substation in Afghanistan to Bannu 220 kV Substation in Pakistan a (ANNEX II and ANNEX III).

This option is based on utilizing the unstrung second circuit of USAID Kabul's anticipated 220 kV double circuit transmission line. This line is planned to be single strung from the Kabul South 500/220 kV Substation to the 220 kV Kandahar Substation. For this option, a second circuit would be installed on the unstrung portion of the Kabul 500/220 kV Substation to Ghazni, and from there, a new transmission line laid to the Bannu 220 kV Substation in Pakistan. The line length and cost would be comparatively higher than Option 1.

Under this option, NTDC would have to make alternate arrangements for evacuating power from existing generation plants in the area, and would have to operate incoming power in island mode until the Afghan and Pakistani grids are synchronized, or NTDC installs an HVDC converter at the Bannu Substation.

8.4 Option 4

1. Kabul South 500/220 kV Substation to Arghandi to Ghazni to Kandahar 220 kV Substation.
2. Kandahar 220kV Substation in Afghanistan to 220 kV Substation in Quetta in Pakistan indicated in NTDC Network Map (ANNEX I and ANNEX II).

This option utilizes the unstrung portion of the double circuit between the Kabul South 500/220 kV Substation and the Kandahar 220 kV Substation planned USFOR-A; and the construction of a new 220 kV line from Kandahar to the Quetta 220 kV Substation in Baluchistan Provence in Pakistan. The cost and length of the proposed transmission line would be more costly when compared with Option 1.

Under this option, NTDC would need to make alternate arrangements for evacuating power from existing generation plants in the area, and would have to operate incoming power in island mode until the Afghan and Pakistani grids are synchronized, or NTDC installs an HVDC converter at Bannu Substation.

The length of the transmission lines necessitates conducting system studies once an actual transmission line option is chosen. This is needed to ascertain the VAR compensation requirements, computation of losses, and confirmation that there are no other system-related issues.

Normally, the "N-1" principle would be applied in the design of any transmission line system to ensure the continuity of power supplies, even in the event of one transmission line failure. In this case, however, it would not be possible to meet this criteria because of the high costs associated with the extra high voltage transmission lines. However, the extra high voltage lines are built to robust standards and with proper maintenance and supervision, its failure rates would generally be low.

At present, the 500 kV transmission lines to the Kabul South 500 kV Substation are funded by the ADB, and are scheduled for construction. The transmission lines to Pakistan described above are not yet funded.

In addition to the above four options of bringing power from CAR countries to Pakistan through Afghanistan, there are other options if adopted can facilitate power flow to Pakistan, like supporting the ongoing efforts to develop CASA-1000.

8.5 Option 5

Adopt the CASA-1000 interconnection concept; and bridge the funding gap. CASA aims to bring power (1300 MW) from Tajikistan to Afghanistan & Pakistan (Peshawar); project is scheduled for completion by 2018. Funding gap exists subsequent to ADB withdrawal from CASA project. ADB contribution was equivalent to 40% of project cost.

Under CASA-1000 option, summer seasonal surplus energy from Kyrgyz Republic and Tajikistan are planned to be imported over HVDC transmission lines between Tajikistan, Afghanistan and Pakistan[10]. SNC-Lavalin final report "Central Asia-South Asia Electricity Transmission and Trade (CASA-1000)" dated Feb 2011, indicates that the power system in the Kyrgyz Republic can deliver up to 1000 MW at the Datka Substation in Kyrgyz Republic without incurring significant costs in the upgrade of its internal AC power system. From Datka Substation, this level of power can be delivered to Tajikistan either through a new 500 kV line to Khoujand Substation or a new direct 500kV line to Sangtuda Substation. From Sangtuda Substation in Tajikistan 1300 MW power is planned to be exported over a three terminal HVDC system with 1000 MW going to Peshawar in Pakistan and 300 MW going to Kabul in Afghanistan. Should Afghanistan increase its own power generation and not require the 300MW, the entire 1300 MW can be transported to Pakistan. The cost of the project is estimated by SNC-Lavalin to be about US$ 953 million, including Interest During Construction (IDC). The project is assessed by SNC-Lavalin to be economically viable based on a 10% discount rate with a Benefit/Cost ration of 1.3% and an EIRR of 15.6%.

Annex X shows the conceptual transmission lines and HVDC converter locations in Kyrgyz Republic, Tajikistan, Afghanistan and Pakistan and the Annex XI depicts the proposed routing of the transmission lines on a geographical map.

8.6 Option 6

The ADB Master plan proposes a 500 kV link from Pule Khumre to Kabul to Peshawar due for completion by 2020-2032. And, there was a 500 link planed between Tajuikistan and PuliKhumri in Afgahnistan, but later changed to 220 kV. Converting the planned 220 kV Tajikistan-Pule Kkumre interconnection back to 500 kV and expediting the project completion by 2020, about 1000 MW of Tajikistan and Kirghiz hydro power can be transmitted to Peshawar. There are plans to interconnect Tajikistan and Kirghizstan grids outside CASA-1000. The Kirgiz-Tajik 500 kV interconnection planned outside CASA-1000 will need to be accelerated for completion by 2020.

9. Transmission Lines between Afghanistan and Pakistan (yet to be funded)

The most feasible and cost effective option to bring CAR and Afghan power to Pakistan is to utilize the unstrung portion of the 220 kV double circuit line between the Kabul South 500/220 kV Substation and Khost Substation, and install a new transmission line between Khost and Bannu Substations. The route would be Kabul South- Pule Alam -Gardez –Khost-Bannu (Pakistan) (Option 1, above).

[10] SNC-Lavalin Central Asia-South Asia Electricity Transmission and Trade (CASA-1000) Project feasibility Study Update

The distance from Khost (Afghanistan) to Bannu (Pakistan) is approximately 160 km. Construction of a twin bundle double circuit line with rail conductor, along with two line bays (one each at Khost and Bannu), including a second circuit stringing from Kabul South to Gardez, would cost roughly U.S. $85 Million. This estimate is based on prevailing construction costs in Pakistan utilizing local labor.

Construction of a single strung double circuit 220 kV line from Kabul south to Gardez is underway, implemented by USFOR-A, and should be completed by 2014, if funding is arranged. In case funding cannot be arranged, additional costs must be included in the estimate (approximately U.S. $45 Million).

The project, in total, would cost roughly U.S. $130 Million, and would deliver 300 MW of power to Pakistan. (ANNEX XII).

10. Cost of Imported Power to Pakistan

Costs of supply for economic analysis are normally derived from specific project costs, or from a long-range countrywide or region-wide master plan analysis. The Long Run Marginal Cost (LRMC) is approximated by the "levelized" cost of supply. For Turkmenistan, Tajikistan and Uzbekistan, such information was not readily available. Given the scarcity of reliable information to compute the LRMC, the Study Team recommends that the price of power imported from Uzbekistan, Tajikistan and Turkmenistan described in the power purchase agreements be taken as the costs of supply. In addition, the wheeling charges imposed by Afghanistan must be added to the cost of power supply.

11. Risk Analysis of Importing Power from Afghanistan

The major risk expected to evolve in execution of the project and its maintenance later on are law and order situation both in Afghanistan and Pakistan, which will need to be given due consideration. The costs have been estimated keeping all these facts in mind. There are several other real and potential risks associated with importing power from Afghanistan. As Afghanistan does not have enough power to meet its own needs, at present, it must rely on its northern neighbor Turkmenistan to supply the difference between its supply and real demand. Should Turkmenistan stop exporting power, Afghanistan would be unable to fulfill its power purchase obligations to Pakistan. Therefore, Afghanistan must negotiate power purchase contracts with Turkmenistan that include penalties for nonperformance. These penalties should be determined in consultation with Pakistan, as loss of imported power would cause NTDC to cut power to its customers, causing economic damage.

In addition to potential nonperformance by Turkmenistan, there is also a risk of loss of transmission lines due to natural events such as ice storms, avalanches or insufficient maintenance by the state. Normally, transmission lines are built to withstand the most severe weather and seismic conditions experienced in the region. However, it is possible that these conditions can be exceeded by one-time episodes, acts of terrorism, or sabotage. Afghanistan should maintain a dedicated security detail for supervising the transmission lines and involve the residents living near the transmission line to report suspicious activity or suspected acts of terrorism and sabotage. Afghanistan should also have several repair crews at different locations along the length of the transmission line on standby to repair any damage as quickly as possible. These crews should be trained in Emergency Restoration Systems and live line maintenance to minimize outage times. The power purchase agreement should include the cost of these resources and also include penalties for nonperformance to encourage Afghanistan to fix the damage and restore the power supply as soon as possible.

Afghanistan should also consider obtaining insurance against catastrophic failures of transmission lines or substations due to sabotage.

12. Legal/Regulatory Review and Contracts[9]

12.1 Legal/Regulatory Matters

A review of the applicable legal and regulatory framework will need to be conducted, in respect of:

1. Afghanistan in relation to exports of power; and
2. Pakistan in relation to imports.

An additional review may be needed with respect to Afghanistan exporting power to Pakistan that it has purchased from Turkmenistan. Any such review would likely be limited, seeing as the CAR Countries are already exporting power to Afghanistan. The law governing import of items (power) into Pakistan would also need to be reviewed.

The purpose of such reviews would be to understand the enabling environments presently in place, and to ascertain whether or not any impediments to the proposed arrangements (long-term sales of electricity, guaranteed transmission in Afghanistan, and access to the interconnection/s) exist. Should any impediments be identified, they will need to be overcome, either by passing legislative amendments or implementing regulatory instruments; or, perhaps, the execution of a sovereign-to-sovereign agreement. Such an agreement may be a prerequisite before any financing agency would be willing to provide debt in order to mitigate political risk.

In preparing this Desk Study, (i) very preliminary discussions have been held with local lawyers with experience in Pakistan's power sector, and (ii) a high level review of the key laws and regulations has been conducted, to ascertain whether the legal framework presently encompasses imports of power across Pakistan's borders. The outcome of those discussions and conclusion of the review is that the present legal framework does *not* appear to explicitly envisage imports.

NEPRA[11] has authority to regulate tariffs, rates, charges and terms and conditions for supply of (i) transmission services, (ii) all services incidental to transmission, (iii) interconnection, and (iv) transmission and interconnection by "specified" transmission facilities.

In terms of power sales, NEPRA has authority *only* in relation to sales made to consumers, i.e. those who purchase for consumption and not for delivery or re-sale to others. While generation prices are also regulated, NEPRA's authority extends only throughout Pakistan.

Therefore, power imported into Pakistan would be regulated only from the point of entry into Pakistan, and only with respect to (i) related transmission and interconnection services, and (ii) sales to consumers by distribution companies.

Experience in fixing appropriate tariffs for power generated outside Pakistan appears limited, at best. However, the legislative basis for this would be hard to establish. Regulated tariffs to consumers are (broadly) based on generation costs and energy source, and, while it is understood that NEPRA would seek to be assured as to the appropriateness of prices of imported power (prices are satisfactory and provide value for money), ultimately, NEPRA would have to accept such prices. In any event, subsidies play a significant role in electricity tariffs throughout Pakistan, and will no doubt do so in relation to imported power.

NEPRA's role in assessing technical impacts on the power system of imports needs to be ascertained, particularly the consequences for the system of any failure of delivery or outage of the cross-border interconnections.

In conducting the legal and regulatory review, the efficacy of involving NEPRA at an early stage should be explored. NEPRA understands of the proposed arrangements, potential terms and conditions, and proposed pricing will aid in identifying potential issues. It may also be helpful for NEPRA to liaise, early in the process, with the Afghanistan regulator.

[11] Regulation of Generation, Transmission and Distribution of Electric Power Act, 1997 (as amended)

Finally, it would also be prudent to confirm that the proposed imports meet the Government of Pakistan's policies regarding energy sources and fuel diversification.

The Study Team recommends that NEPRA consider regulating – and asserting authority over – prices of imported power.

12.2 Contracts

To the extent that surplus quantities are available for export under Afghanistan's existing or new contracts with the CAR Countries, the PPAs that Pakistan would enter into with Afghanistan could be "back-to-back" with those contracts, and so would be subject to the terms negotiated by Afghanistan with the car countries, or purely Afghanistan-Pakistan negotiated bilateral contracts (in either case will be subject to Afghan-specific risks (transmission, security, political, natural disasters).

Regarding surplus power that may be available under future contracts, an opportunity exists for Pakistan to influence the terms and conditions.

At this stage, the Study Team can logically assume that the buyer of imported power will be NTDC. Arrangements for (i) the operation and maintenance of cross-border facilities, and (ii) power flow planning, execution and metering must be agreed between NTDC and DABS. Measures to address dispute resolution and governing law will also need to be discussed and agreed upon.

13. Cost Benefit Analysis

13.1 Cost Benefit Calculation

13.2 Assumptions:

1. Firm power imported will be 300MW
2. The exchange rate used is 1 USD = 100 PKR
3. The NTDC Use of System Charges (Fixed) at PRs. 85.9 per kW/month (actual)
4. The O&M charges are at 2% of total value of fixed assets (assumed)
5. The pool cost of generation is 10.47 PRs./kWh (2013 actual cost)
6. Power delivery will be 90% (assumed), taking into account outage times and other availability factors
7. The transmission losses will be 3% (assumed, based on 2013 actual losses)
8. Security costs will be 25% of the total investment (assumed)

13.3 Calculation of Tariff for Power Delivered to Pakistan

This study estimates that the base rate that Afghanistan will pay for power is 6 cents/kWh.

The wheeling and transit charges will be 2.5 cents/kWh (assumed).

The tariff (after incorporating losses) is calculated as: 6 cents + 2.5 cents = 8.5 cents/kWh

13.4 Reduction in Loss to Economy due to Load-Shedding:

The number of people who will benefit is based on the following calculation:
300MW x 9262 individuals = 2,778,600

The maximum energy supplied each year will be:
300MW x 1000 (constant) x 365 days x 24 hours x 0.9 (capacity factor) x 0.97 (loss factor)
= 2,294.244 GWh

Domestic Users at Rs.23/kWh

45.9% x Rs.23/kWh x 2,294,244,000 kWh = U.S. $242.20 Million per year

Commercial User at Rs.68/kWh

7.47% x Rs.68/kWh x 2,294,244,000 kWh = U.S. $ 116.53 Million per year

Industrial User at Rs.53/kWh

28.11% x Rs.53/kWh x 2,294,244,000 kWh = U.S. $341.80 Million per year

Agricultural User at Rs.29/kWh

11.7% x Rs.29/kWh x 2,294,244,000 kWh = U.S. $77.84 Million per year

14. Financial Analysis

The financial analysis performed is presented below. The benefit to cost ratio is approximately 1.17, with a 34.72% rate of return and a simple payback period of 3.71 years.

INPUT Variables		Annual Escalation factors	In PKR
US Dollar Rate (PKR)	100		
Power Import Tariff (cents/kWh)	8.5	5.00%	8.5
NTDC Use of System Charges Fixed (USCF) (Rs/kW/mon)	85.9	5.00%	
Pool Generation cost (cents/kWh)	10.47	5.00%	10.47
O&M cost %age of fixed asset cost	2.00%	5.00%	

Import of Power from CAR Countries

Year	Financial year ending 30th June	Projected Outflows				Projected Inflows					Discounted Cost @		Discounted Benefits @		Net Benefits	Comulative cash flows
		Investment Cost	O&M Cost	Cost of Purchasing Power	Total Outflows	Energy Wheeled	NTDC USCF Rs/kW/mon	Pool Generation Cost	Other Savings	Total Inflows	10%	12%	10%	12%		
		Rs. million	Rs. million	Rs. million	Rs. million	GWh	Rs. million	Rs. million	Rs. million	Rs. million	Rs. million	Rs. million	Rs. million	Rs. million	Rs. million	
0	2014	6,500.00			6,500.00		-	-	-	-	6,500.00	6,500.00	-	-	(6,500.00)	(6,500.00)
1	2015	6,500.00			6,500.00		-	-	-	-	5,909.09	5,803.57	-	-	(6,500.00)	(13,000.00)
2	2016		260.00	19,501.07	19,761.07	2,294.24	278.32	24,020.73	-	24,299.05	16,331.47	15,753.41	20,081.86	19,371.05	4,537.98	(8,462.02)
3	2017		273.00	20,476.13	20,749.13	2,294.24	292.23	25,221.77	-	25,514.00	15,589.13	14,768.82	19,169.05	18,160.36	4,764.88	(3,697.15)
4	2018		286.65	21,499.93	21,786.58	2,294.24	306.84	26,482.86	-	26,789.70	14,880.53	13,845.77	18,297.73	17,025.34	5,003.12	1,305.97
5	2019		300.98	22,574.93	22,875.91	2,294.24	322.19	27,807.00	-	28,129.19	14,204.14	12,980.41	17,466.01	15,961.26	5,253.28	6,559.25
6	2020		316.03	23,703.68	24,019.71	2,294.24	338.29	29,197.35	-	29,535.65	13,558.50	12,169.13	16,672.10	14,963.68	5,515.94	12,075.19
7	2021		331.83	24,888.86	25,220.69	2,294.24	355.21	30,657.22	-	31,012.43	12,942.20	11,408.56	15,914.28	14,028.45	5,791.74	17,866.92
8	2022		348.42	26,133.30	26,481.73	2,294.24	372.97	32,190.08	-	32,563.05	12,353.92	10,695.53	15,190.90	13,151.67	6,081.32	23,948.24
9	2023		365.85	27,439.97	27,805.82	2,294.24	391.62	33,799.59	-	34,191.20	11,792.38	10,027.06	14,500.41	12,329.69	6,385.39	30,333.63
10	2024		384.14	28,811.97	29,196.11	2,294.24	411.20	35,489.57	-	35,900.76	11,256.36	9,400.36	13,841.30	11,559.09	6,704.66	37,038.29
11	2025		403.35	30,252.57	30,655.91	2,294.24	431.76	37,264.04	-	37,695.80	10,744.71	8,812.84	13,212.15	10,836.64	7,039.89	44,078.18
12	2026		423.51	31,765.19	32,188.71	2,294.24	453.35	39,127.25	-	39,580.59	10,256.31	8,262.04	12,611.60	10,159.35	7,391.89	51,470.07
13	2027		444.69	33,353.45	33,798.14	2,294.24	476.01	41,083.61	-	41,559.62	9,790.12	7,745.66	12,038.34	9,524.39	7,761.48	59,231.55
14	2028		466.92	35,021.13	35,488.05	2,294.24	499.82	43,137.79	-	43,637.60	9,345.11	7,261.56	11,491.14	8,929.12	8,149.55	67,381.10
15	2029		490.27	36,772.18	37,262.45	2,294.24	524.81	45,294.68	-	45,819.48	8,920.33	6,807.71	10,968.82	8,371.05	8,557.03	75,938.13
16	2030		514.78	38,610.79	39,125.57	2,294.24	551.05	47,559.41	-	48,110.46	8,514.87	6,382.23	10,470.24	7,847.86	8,984.88	84,923.02
17	2031		540.52	40,541.33	41,081.85	2,294.24	578.60	49,937.38	-	50,515.98	8,127.83	5,983.34	9,994.32	7,357.37	9,434.13	94,357.15
18	2032		567.55	42,568.40	43,135.95	2,294.24	607.53	52,434.25	-	53,041.78	7,758.38	5,609.38	9,540.03	6,897.53	9,905.83	104,262.98
19	2033		595.92	44,696.82	45,292.74	2,294.24	637.91	55,055.96	-	55,693.87	7,405.73	5,258.79	9,106.39	6,466.44	10,401.13	114,664.11
20	2034		625.72	46,931.66	47,557.38	2,294.24	669.80	57,808.76	-	58,478.56	7,069.10	4,930.12	8,692.47	6,062.28	10,921.18	125,585.29
21	2035		657.01	49,278.24	49,935.25	2,294.24	703.29	60,699.20	-	61,402.49	6,747.78	4,621.99	8,297.35	5,683.39	11,467.24	137,052.53
22	2036		689.86	51,742.15	52,432.01	2,294.24	738.46	63,734.16	-	64,472.62	6,441.06	4,333.11	7,920.20	5,328.18	12,040.60	149,093.13
23	2037		724.35	54,329.26	55,053.61	2,294.24	775.38	66,920.87	-	67,696.25	6,148.29	4,062.29	7,560.19	4,995.17	12,642.63	161,735.76
24	2038		760.57	57,045.73	57,806.29	2,294.24	814.15	70,266.91	-	71,081.06	5,868.82	3,808.40	7,216.55	4,682.97	13,274.76	175,010.53
25	2039		798.60	59,898.01	60,696.61	2,294.24	854.85	73,780.26	-	74,635.11	5,602.05	3,570.38	6,888.52	4,390.28	13,938.50	188,949.03
26	2040		838.53	62,892.91	63,731.44	2,294.24	897.60	77,469.27	-	78,366.87	5,347.42	3,347.23	6,575.41	4,115.89	14,635.43	203,584.46
27	2041		880.45	66,037.56	66,918.01	2,294.24	942.48	81,342.73	-	82,285.21	5,104.35	3,138.03	6,276.53	3,858.65	15,367.20	218,951.66
28	2042		924.47	69,339.44	70,263.91	2,294.24	989.60	85,409.87	-	86,399.47	4,872.33	2,941.90	5,991.23	3,617.48	16,135.56	235,087.22
29	2043		970.70	72,806.41	73,777.11	2,294.24	1,039.08	89,680.36	-	90,719.44	4,650.87	2,758.03	5,718.90	3,391.39	16,942.34	252,029.56
30	2044		1,019.23	76,446.73	77,465.96	2,294.24	1,091.03	94,164.38	-	95,255.42	4,439.46	2,585.65	5,458.95	3,179.43	17,789.45	269,819.01
	Total	13,000	16,204	1,215,360	1,244,564	66,533	17,345	1,497,037		1,514,383	278,473	225,573	327,163	262,245	269,819	

	@ 10%	@ 12%
Benfit/Cost Ratio	1.17	1.16
NPV	48,690.33	36,672.16

Total Capital cost	13,000.00
Avg. Benefits p.a	8,993.97
Simple Payback	3.71
Internal Rate of Return (IRR) =	34.72%

15. Impact of Import of CAR and Afghanistan Power

Power imports to Pakistan would be highly beneficial to Afghanistan and Turkmenistan. Pakistan would receive power for its industries, which would provide significant benefits to Pakistan's economy and populace. Afghanistan would receive significant revenues from wheeling charges, and Turkmenistan would benefit from the profits it makes in selling power.

In line with USAID efforts to add more MW to Pakistan's grid, power imports may help bring peace and stability in a volatile region, and can provide a source of improved political and economic ties not only between Afghanistan and Pakistan, but South Asia and the Central Asia Republics, as well.

ADB has already planned construction of a 500 kV link extending from Turkmenistan to Kabul under its Afghan Master Plan. Similarly, USAID and USFOR-A have planned construction of 220 kV links extending to Pakistan's border with Afghanistan. These lines are not going to be fully loaded for many years to come. The optimal utilization of these interconnections to transmit power to areas of Pakistan bordering Afghanistan would provide increased revenue to Afghanistan from the use of system charges.

Furthermore, this option would open a corridor for thousands of MW of power flow from CAR countries into Pakistan, encouraging investors to invest in power trade with the expectation of a reasonable rate of return.

This project will support the already ongoing road construction project in the area under USG assistance and the activities thus will complement each other.

The Turkmenistan power is thermal based and can provide 300 MM round the year. It will help in supporting the badly needed base load requirement of NTDC network and will help reduce the import bill.

15.1 Social and Environmental Benefits

In order to achieve the economic growth and poverty reduction in this area bordering Afghanistan, it is essential to ensure a reliable power supply to an increasing number of industrial, agricultural, commercial, and domestic consumers. The increasing amount of load shedding because of the scarcity of generation is adversely affecting all productive activities. The enhanced power supply would bring substantial economic gains for the people of this region.

16. Conclusion and Recommendations

Turkmenistan is the only country in the near future (2016-2018) that can supply an estimated 300 MW of power throughout the year to Afghanistan that can be exported to Pakistan.

There are already plans in Turkmenistan to install a new 300 MW[12] dedicated natural gas fired power plant in Atamyrat with Asia Development Bank funding. This plant would supply 300 MW to Afghanistan over new 500 kV transmission lines. The 500 kV transmission lines between Turkmenistan and Afghanistan should be commissioned by 2017.

Among the options offered, option 1 (discussed above) should be given the highest priority because:

- It is the most feasible, least cost and fastest option to bring CAR and Afghanistan power to Pakistan.
- A transmission line is currently being built from Kabul to Gardez and the extension from Gardez to Khost will be funded in 2014. The construction of a double circuit 220 line, Khost to Bannu (160 km approx.) could allow flow of up to 300 MW of power to Pakistan. The route would be Kabul South- Pule Alam-Gardez- Khost- Bannu (Pakistan)
- This options provides the shortest distance for new line construction, relies on utilizing the unstrung part of the Kabul south to Khost transmission line installed under USFOR-A and would significantly reduce construction time.
- Option 1 would require islanding as do others, until the Pakistan and Afghanistan grids can be synchronized.
- Option 1 could be in service before 2018.

Option 2 is the next best alternative and can be adopted in 2nd phase.

- Under the Afghanistan Power Sector Master Plan there are plans to install a 500 kV transmission line between Kabul and Peshawar (Pakistan). This Transmission line has the capacity to Transmit 1000 MW.
- The Plan includes installation of HVDC Converting Station at Peshawar to overcome Islanding.
- However, at this time funding is not available for construction of this line.

- Option 2 is to facilitate ADB to fast track the construction of the already planned 500kv transmission line from Kabul to Peshawar to import the energy into Pakistan.
- This option could deliver power to Pakistan by 2020 and beyond.

The option 3 and 4 if taken in hand as third phase can bring additional 300 MW each, thus totaling CAR and Afghanistan Power Import to Pakistan to 1900 MW.

Phase-III shall include:

The Kabul South 500/220 kV Substation to Arghanidi to Gahazni 220 KV Substation, Ghazni 220 kV Substation in Afghanistan to Bannu 220 kV Substation in Pakistan (ANNEX II and ANNEX III)

The Kabul South 500/220 kV Substation to Arghandi to Ghazni to Kandahar 220 kV Substation, Kandahar 220kV Substation in Afghanistan to the 220 kV Substation in Quetta in Pakistan indicated in NTDC Network Map (ANNEX I and ANNEX II).

- The power import project is most cost effective and its early completion schedule, and the fact that it helps mitigate country energy crises makes it the most visible project.

[12] ABD Comments on Afghanistan Inter Connectivity (March17,2013)

- The 30.53 internal rate of return with 1.17 benefits to cost ratio and payback period of 4.86 years makes it a most attractive project for investment.
- The Turkmenistan power is thermal based and can provide 300 MM round the year. It besides assisting in overcoming load shedding problem will help in supporting the badly needed base load requirement of NTDC network and reduce the import bill.
- The recommendations are to go ahead with the next step detail feasibility study in order to pave the way for implementation of the project at the earliest and help Pakistan in these crucial moments of the worse energy crises.

ANNEXES

Annex I:
Power Import to Pakistan (Concept)

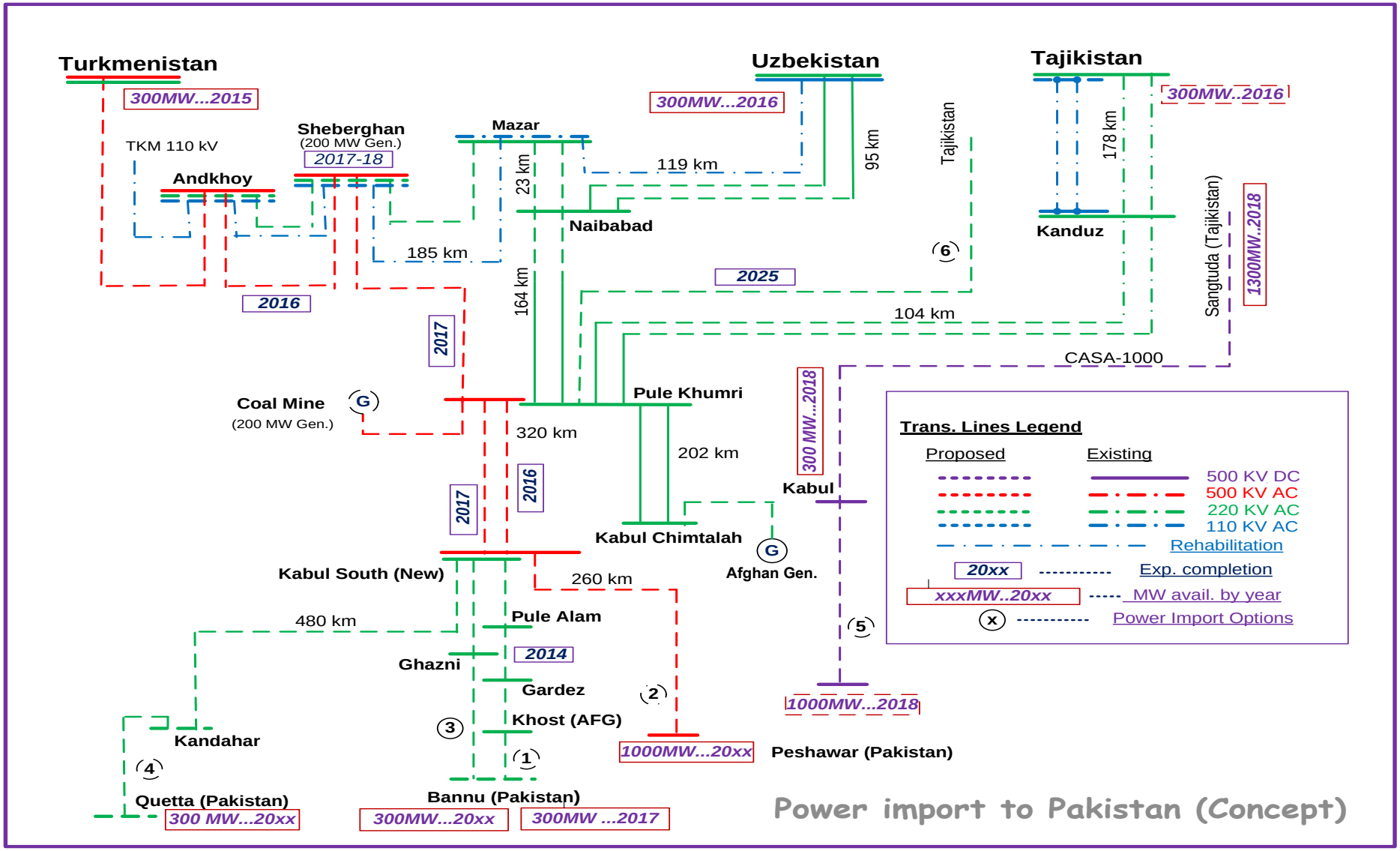
Turkmenistan
300MW...2015
TKM 110 kV
Andkhoy
Sheberghan
(200 MW Gen.)
2017-18
Mazar
23 km
119 km
Uzbekistan
300MW...2016
95 km
Tajikistan
Tajikistan
300MW..2016
178 km
Kanduz
Sangtuda (Tajikistan)
1300MW..2018
Naibabad
185 km
6
2025
2016
164 km
104 km
2017
CASA-1000
Coal Mine
(200 MW Gen.)
G
Pule Khumri
320 km
202 km
300 MW...2018
Kabul
2016
2017
Kabul Chimtalah
G
Afghan Gen.
Kabul South (New)
260 km
480 km
Pule Alam
5
Ghazni
2014
Gardez
2
1000MW...2018
Kandahar
3
Khost (AFG)
1000MW...20xx
Peshawar (Pakistan)
4
1
Quetta (Pakistan)
300 MW...20xx
Bannu (Pakistan)
300MW...20xx
300MW ...2017
Trans. Lines Legend
Proposed
Existing
500 KV DC
500 KV AC
220 KV AC
110 KV AC
Rehabilitation
20xx
Exp. completion
xxxMW..20xx
MW avail. by year
x
Power Import Options
Power import to Pakistan (Concept)

Annex II:
Power Flow Diagram on a Geographical Map

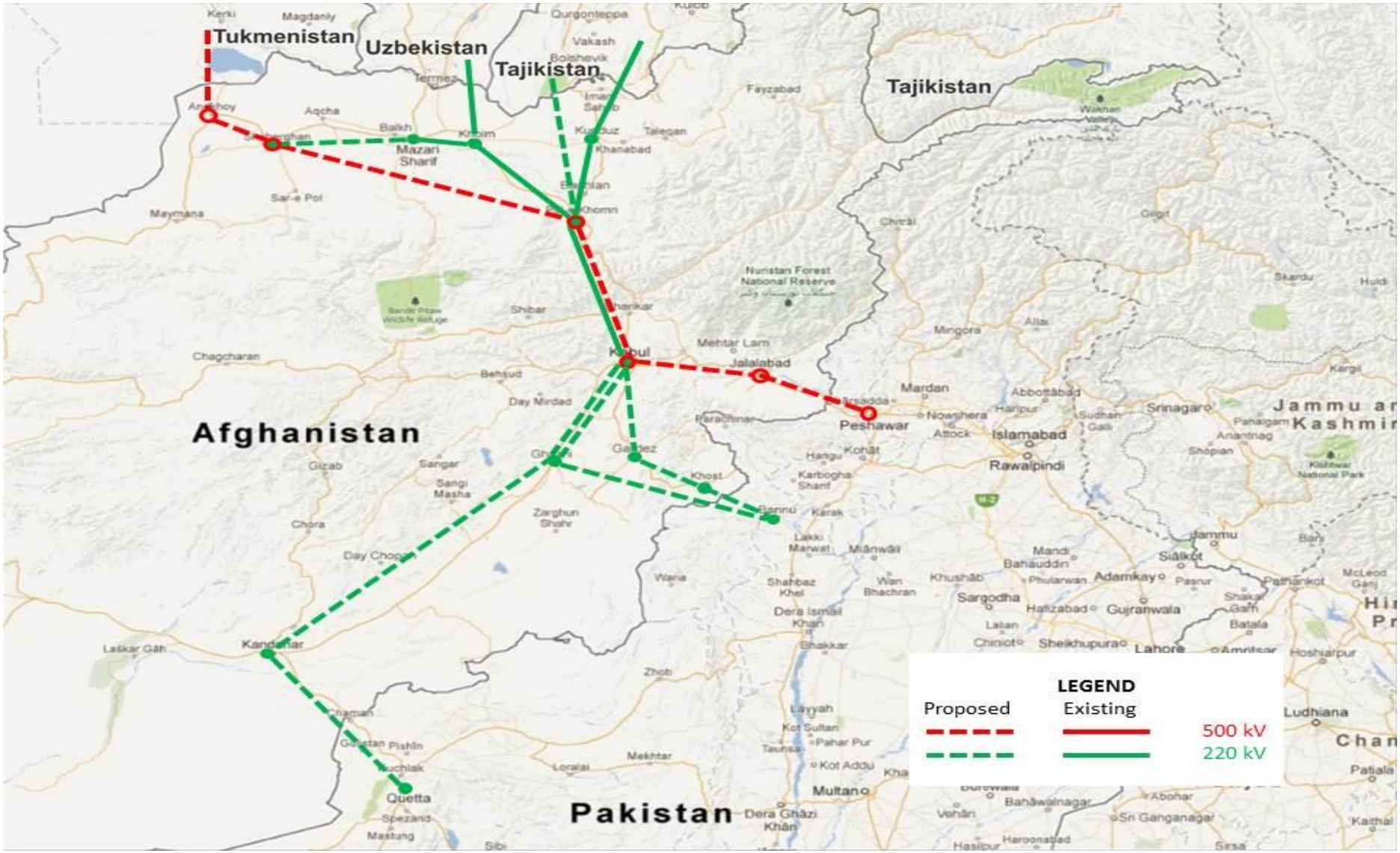
Tukmenistan
Uzbekistan
Tajikistan
Tajikistan
Afghanistan
Pakistan
Mazar Sharif
Kabul
Jalalabad
Peshawar
Islamabad
Rawalpindi
Kandahar
Quetta
Lahore
Multan
LEGEND
Proposed
Existing
500 kV
220 kV

Annex III:
NTDC Network Geographical Map

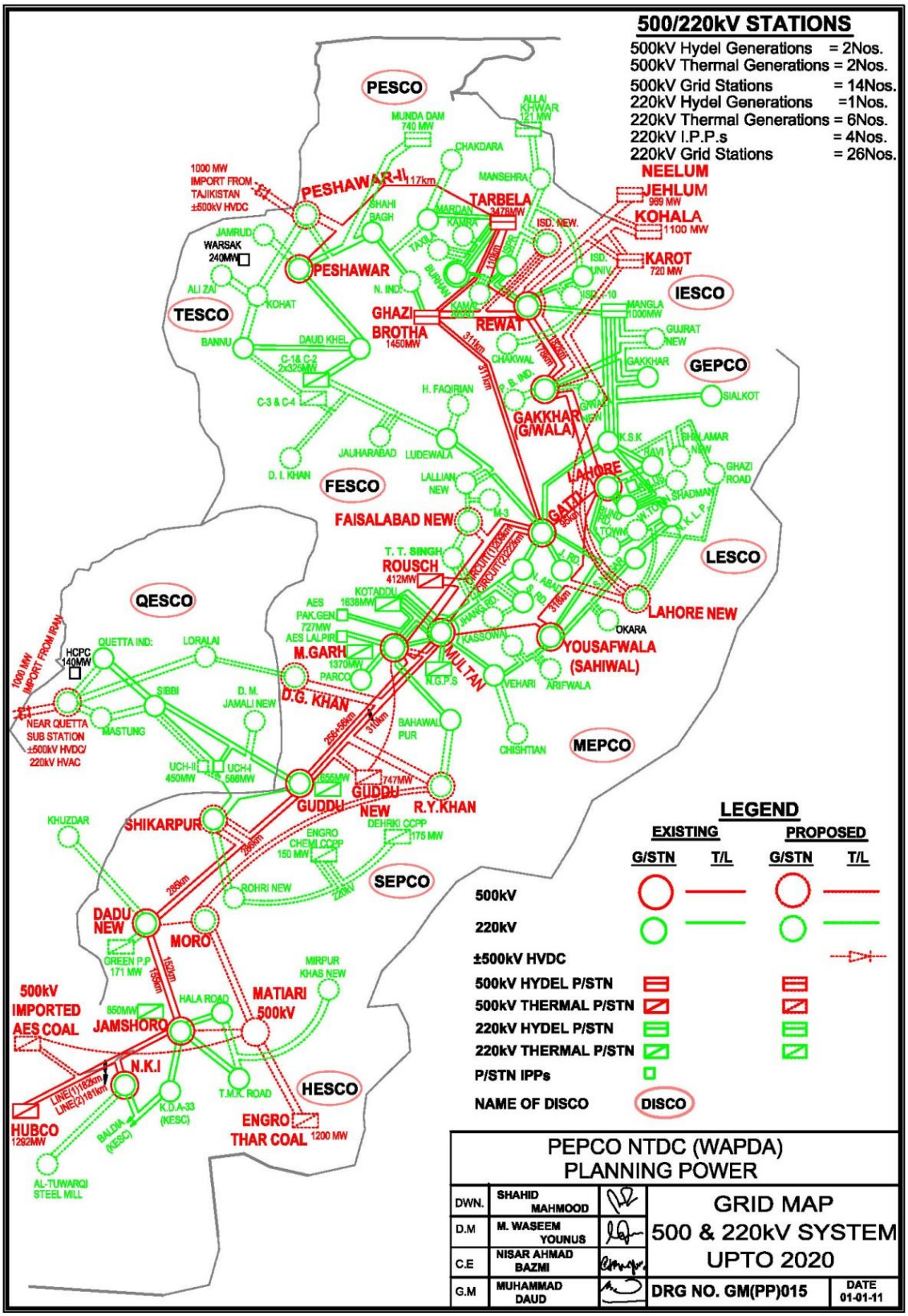

Annex IV: Afghanistan Demand and Generation Forecast

Afghanistan Demand Forecast [1] [2]

Year	Net Electricity Demand (MWh) [1]	Peak Load (MW) [2]
2012	2,813,925	836
2013	3,209,884	930
2014	3,658,950	1,034
2015	4,170,441	1,149
2016	4,766,451	1,281
2017	5,441,121	1,426
2018	6,007,649	1,535
2019	6,608,008	1,647
2020	7,262,285	1,766
2021	7,828,979	1,858
2022	8,461,659	1,978
2023	9,106,684	2,102
2024	9,732,855	2,228
2025	10,405,270	2,362
2026	11,087,106	2,495
2027	11,797,783	2,639
2028	12,531,890	2,790
2029	13,305,383	2,954
2030	14,124,247	3,127
2031	14,991,121	3,310
2032	15,908,796	3,502

Energy Consumption in Afghanistan [3]

Year	2006	2007	2008	2009	2010	2011
Hydro (GWh)	644	755	617	835	910	801
Thermal (GWh)	213	211	197	93	101	39

Year	2006	2007	2008	2009	2010	2011
Import (GWh)	432	609	752	1,155	1,572	2,246
Total (GWh)	1,289	1,575	1,566	2,083	2,583	3,086

Current Hydro Power Capability [4]

Name of Plant	Total Power Generation Capability (MW)
Naghlu HPP	100
Sarobi HPP	22
Mahipar HPP	66
Darunta HPP	11.55
Assassabad HPP	0.7
Charikar HPP	2.4
Jabul	2.5
Ghorband	0.3
Kajakai I & III	33
Grishk HPP	2.4
Pul-i-Khumri I	4.12
Pul-i-Khumri II	8.79
Total:	253.7

Afghanistan Current Thermal Power Generation [5]

No.	Name	Total Power Generation Capability (MW)
1	NW Kabul GT3	21.8
2	NW Kabul GT4	23.0
3	Tarakhil	105.0
4	Nangarhar	2.7
5	Aybak	1.8
6	Taleqan	1.4
7	Ghazni	1.7
8	Kandahar KTA50	11.9
9	Kandahar KTA50 exp.	12.0
10	Kandahar QSK60	8.8
11	Kandahar USACE	20.0

No.	Name	Total Power Generation Capability (MW)
12	Khost	1.1
13	Lashkar Gali / Helmand	3.8
14	Musa Qala	1.9
15	Patkiya	1.8
16	Qalat / Zabol	2.6
17	Tirin Kot / Uruzgan	0.9
	Total:	**222.2**

Future Hydro Power Projects [6]

No.	Name of Project	Total Power Generation Capability (MW)	Earliest possible Commissioning Date
1	Baghdara	210	2021
2	Surubi/Sakundu	180	2021
3	Shal	789	2022
4	Kajakai II	100	2021
5	Qala-e-Mumaee	445	2022
6	Gulbahar	120	2021
7	Capar	116	2021
8	Kama	45	2021
9	Kunar B	300	2021
10	Kajakai Extension	18.5	2019
11	Olambagh	90	2021
12	Kilagai	60	2021
13	Salma	40	2020
14	Upper Amu	1,000	2023
15	Dashtijum	4,000	2023

Afghanistan Demand and Power Availability

Assuming that the entire power system expansion plans are executed by the reported times, the following would be the yearly power available in the country compared to the computed Peak Demand.

Afghanistan Capacity Expansion and Peak Load in MW

Year	2_SEPS_conn	Sheberghan_TPP_el	TKM_2_NEPS_UZB_import	TKM_2_NEPS_UZB_add_import	Kunar_B_HPP	Kunar_A_HPP	Bamyan_TPP_el	Kajaki_Addition_HPP	Olambagh_HPP	Baghdara	Total Capacity	Peak Load
2012	0	0	0	0	0	0	0	0	0	0	1270	836
2013	0	0	0	0	0	0	0	0	0	0	1270	930
2014	0	0	0	0	0	0	0	0	0	0	1270	1034
2015	0	0	0	0	0	0	0	0	0	0	1270	1149
2016	150	0	0	0	0	0	0	0	0	0	1420	1281
2017	150	150	0	0	0	0	0	0	0	0	1570	1426
2018	150	200	300	0	0	0	0	0	0	0	1920	1535
2019	150	200	300	0	0	0	0	0	0	0	1920	1647
2020	150	200	500	500	0	0	0	0	0	0	2620	1766
2021	150	250	500	500	0	0	0	0	0	0	2670	1858
2022	150	350	500	500	0	0	0	0	0	0	2770	1978
2023	300	400	500	500	0	0	0	0	0	0	2970	2102
2024	300	400	500	500	300	0	0	0	0	0	3270	2228
2025	300	400	500	500	300	0	0	0	0	0	3270	2362
2026	300	400	500	500	300	789	0	0	0	0	4059	2495
2027	300	400	500	500	300	789	400	0	0	0	4459	2639
2028	300	400	500	500	300	789	400	100	0	0	4459	2790
2029	300	400	500	500	300	789	1200	100	90	0	5449	2954
2030	300	400	500	500	300	789	1200	100	90	0	5449	3127
2031	300	400	500	500	300	789	1200	100	90	0	5449	3310
2032	300	400	500	500	300	789	1200	100	90	210	5659	3502

(Table 10.3.1 1, Section 10.3.1, Page 10-27 of the Islamic Republic of Afghanistan: Power Sector Master Plan: May 2013; with further addition of two columns, the 'Total Capacity, and 'Peak Load')

The existing total hydro generation is 253 MW [4], thermal 220 MW [5] and solar 6.7 MW [7]. The imports of Afghanistan, as per Section 4 table 10.2.6-1 range up to 103 MW from Iran,

85 MW from Turkmenistan 300 MW from Uzbekistan and 300 MW from Tajikistan. All this totals to 1,270 MW. [7][8]

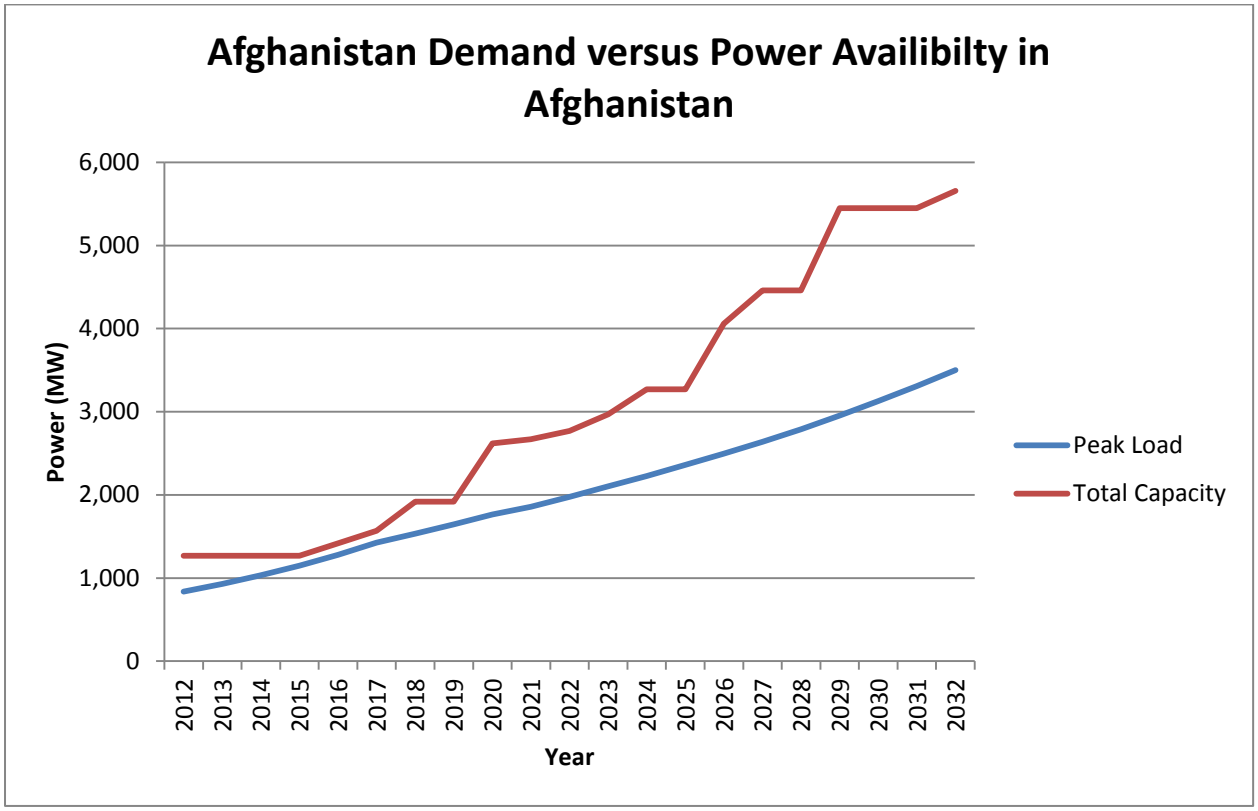

References

1. Islamic Republic of Afghanistan: Power Sector Master Plan: May 2013. Annex 3.4-1
2. Islamic Republic of Afghanistan: Power Sector Master Plan: May 2013. Annex 3.4-3
3. Islamic Republic of Afghanistan: Power Sector Master Plan: May 2013. Table 5.0-3
4. Islamic Republic of Afghanistan: Power Sector Master Plan: May 2013. Table 5.1.1-1
5. Islamic Republic of Afghanistan: Power Sector Master Plan: May 2013. Table 5.1.2-1
6. Islamic Republic of Afghanistan: Power Sector Master Plan: May 2013. Annex 6.1.1-1
7. Islamic Republic of Afghanistan: Power Sector Master Plan: May 2013. Page 5-11
8. Islamic Republic of Afghanistan: Power Sector Master Plan: May 2013. Section 10.1

Annex V: ADB Comments on Afghanistan Connectivity

Received through USAID Energy Office on March 17, 2013

1. Confirmation of the following projects/timelines (sent to us by Jim Liston):

   a. AFG 500 kV connections to Turkmenistan has been approved by ADB. This 500 kV line will go from Turkmenistan border to Andkhoy to Sheberghan. Bid Documents are now under preparation with the line due for completion by Q1 2016. The Turkmenistan 500 kV connection to the border is under construction and is to be completed this year.

   b. A new Turkmenistan Zergar power plant to be financed by ADB is under processing and due for Board approval Q2 this year with commissioning planned for 2016.

   c. ADB is preparing a new loan for a 500 kV connection from Pul-e-Khumri (PUK) to Kabul for approval this year. The line could be completed by 2016 as consultants have started preparing bidding documents for advance procurement of a contractor.

   d. ADB will prepare a 2nd MFF for approval in 2014 with the first tranche to include a 500 kV connection from Sheberghan to Pul-e-Khumri plus HVDC back-to-back at Pul-e-Khumri. This would allow a connection from Turkmenistan to Kabul. Completion is expected by 2017.

   e. The connections from Uzbekistan and Tajikistan are existing.

   f. If a new line from Kabul to Peshawar was built, Turkmenistan/Uzbekistan/Tajikistan could export to Pakistan beginning in 2017.

2. The estimated number of MWs that can be made available at the Kabul grid by 2016 and subsequent years and the MWs that could be surplus and available for export to Pakistan (based on a simulation study).

   Due to existing transmission constraint between Pul-e-Khumri and Kabul, only 300 MW of power could be supplied from north (UZB and TAJ) to KBL. ADB is processing a new grant to construct a new 500 kV line between Pul-e-Khumri and Kabul that would supply export surplus into KBL. The line could be completed only in 2016. No exports to PAK are possible until the proposed 500 kV line is completed. Also demand in AFG (KBL, eastern cities and southern Kandahar) is growing and KBL is expected to have blackouts starting this winter. PAK exports are not envisaged before 2017.

   – By 2016 = 300 MW from UZB, 300 MW from TAJ (summer only); 200 MW AFG generation (including Tarakhel) = TOTAL 500 MW (winter) and up to 800 MW in summer, provided power synchronization is managed and implemented.

– By 2018 = Additional 300 MW from TKM, provided envisaged synchronization (under TUTAP concept) is implemented, totaling nearly 1,000 MW.

3. ADB views Kabul – Gardez – Khost – Bannu transmission line as the quickest option for power import into Pakistan and with the best chance of funding.

   ADB approved funding for Pul-e-Alam & Gardez sub-stations and distribution networks (20,000 new connections) in December 2012. The project is currently in the design stage, bid documents are to be issued in Q4 2013, and work completion is expected by the end of 2016. The complementary transmission line (220 kV) from Kabul to Pu-e-Alam to Gardez is being funded by USDoD.

   ADB is funding the design of T/Line from Gardez to Khost, construction of which could be constructed under 2nd MFF. The proposed line route is quite kinetic and volatile for exports to Bannu (PAK). ADB believes that Kabul-Peshawar is preferable and is a more appropriate corridor to export power. Also due to non-synchronization of the AFG/PAK power systems, connection to Bannu would not be technically and financially feasible, unless Bannu is made an "island" supplied 100% by AFG power (which has its own political complications).

4. ADB views on CASA – 1000; its timelines; its integration with Afghanistan master grid and pre/post CASA scenario.

   The broader concept of Central Asia South Asia Regional Energy Markets (CASAREM) includes many projects including CASA 1000, TUTAP and TAPI, among others. TUTAP is an acronym of the proposed connection countries being Turkmenistan, Uzbekistan, Tajikistan, to Afghanistan and Pakistan, strengthening regional electricity markets and promoting trade, and addressing the energy imbalances in the region. TUTAP (unlike CASA which has a hydro resource potential only for the summer months, only from TAJ and KGZ, and has some opposition from UZB and TKM) has both gas and hydro as power generation modes and can initially connect five countries under its framework (which can be extended further by adding Kyrgyz and possibly India).

   The recently approved AFG-TKM interconnection project ($160 million) by ADB is envisaged as a first phase of the TUTAP regional electricity trade project, which would eventually expand in a phased manner in view of expansion of the regional electricity market and availability of resources. The following phased expansion plan is under discussion:

   a. **Phase 1 --** Import from TKM in North West (The proposed project). Phase 1 comprises about 100 MW imported from TKM, up to 300 MW from UZB, up to 300 MW from TAJ (seasonal) and Afghan generation islanded.

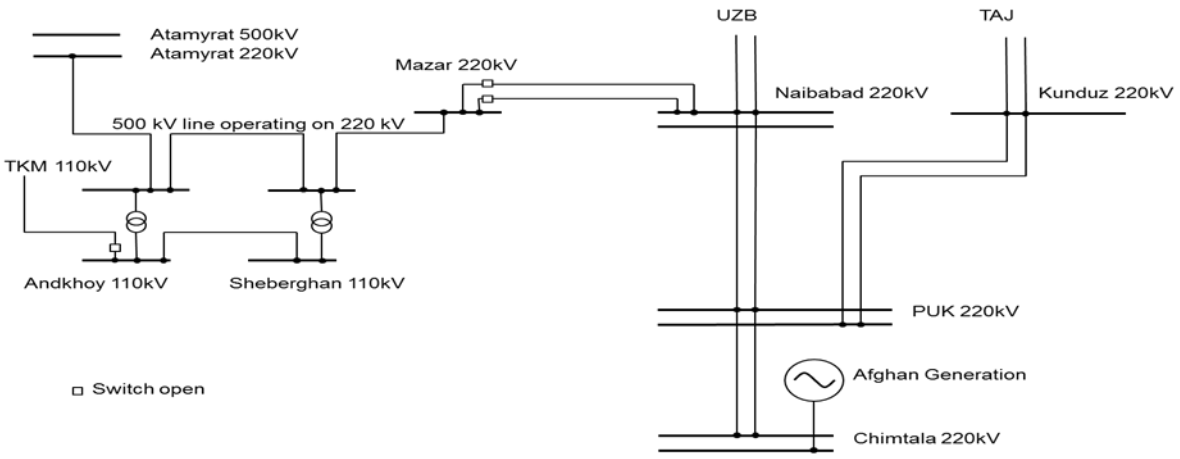

b. **Phase 2 --** TKM Import 300 MW, HVDC B2B at 220 kV comprising 300 MW import from TKM, 300 MW from UZB, up to 300 MW from TAJ (seasonal) and Afghan generation islanded.

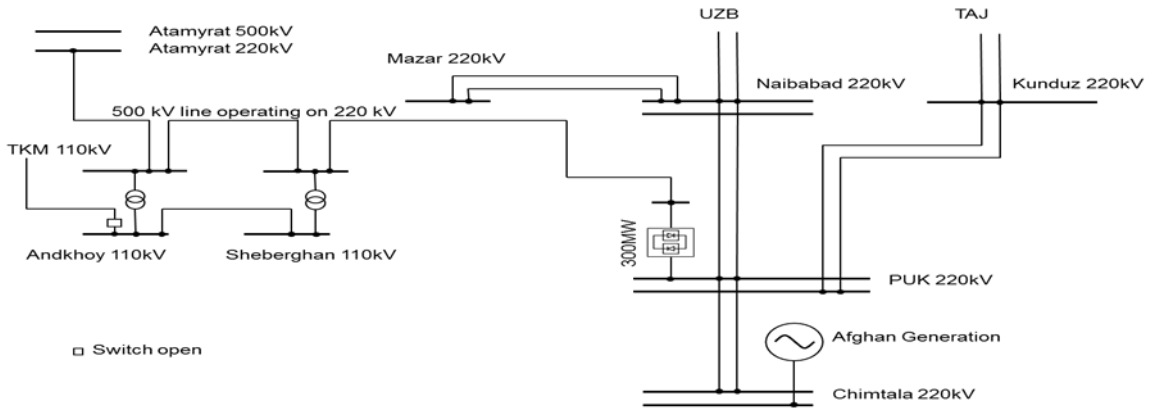

c. **Phase 3 --** comprises 500 MW from TKM, 300 MW from UZB (seasonal), 300 MW from TAJ (seasonal), and Afghan generation feeding to national grid.

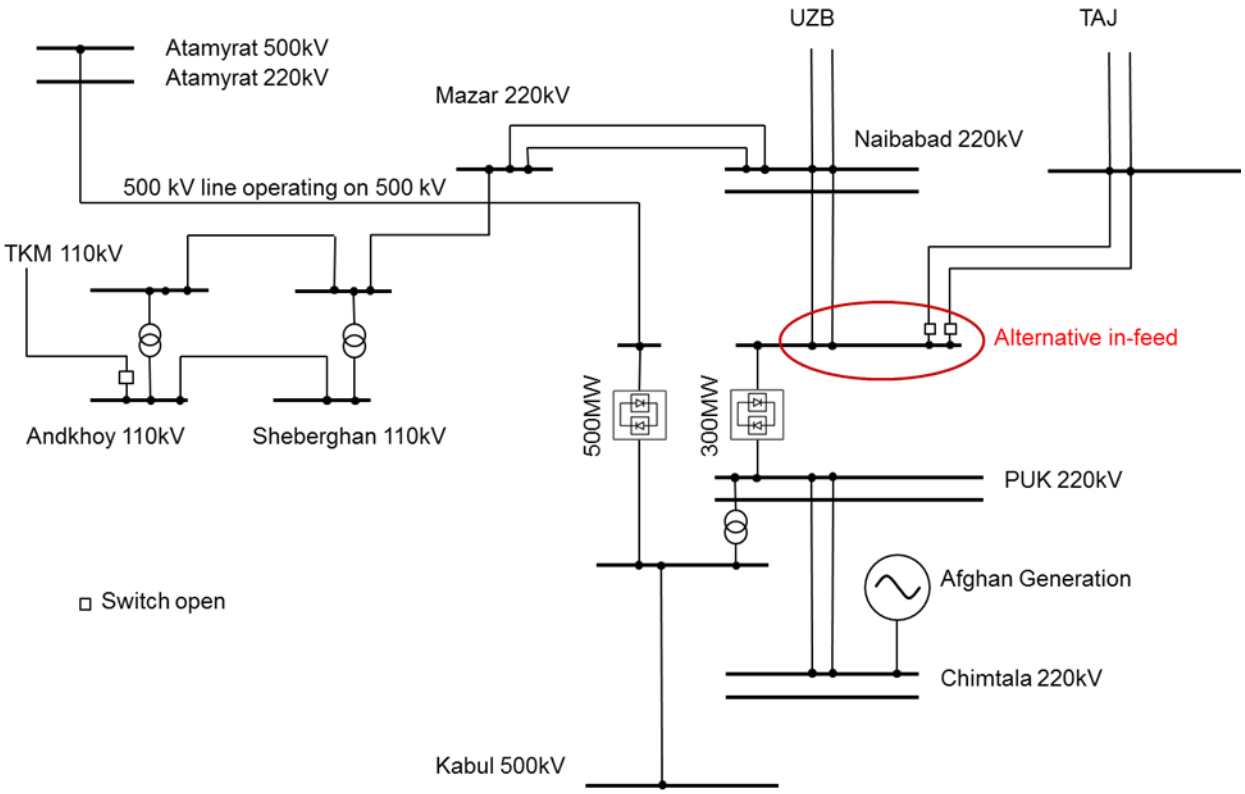

d. **Phase 3 A** -- Seasonal Import from Tajikistan

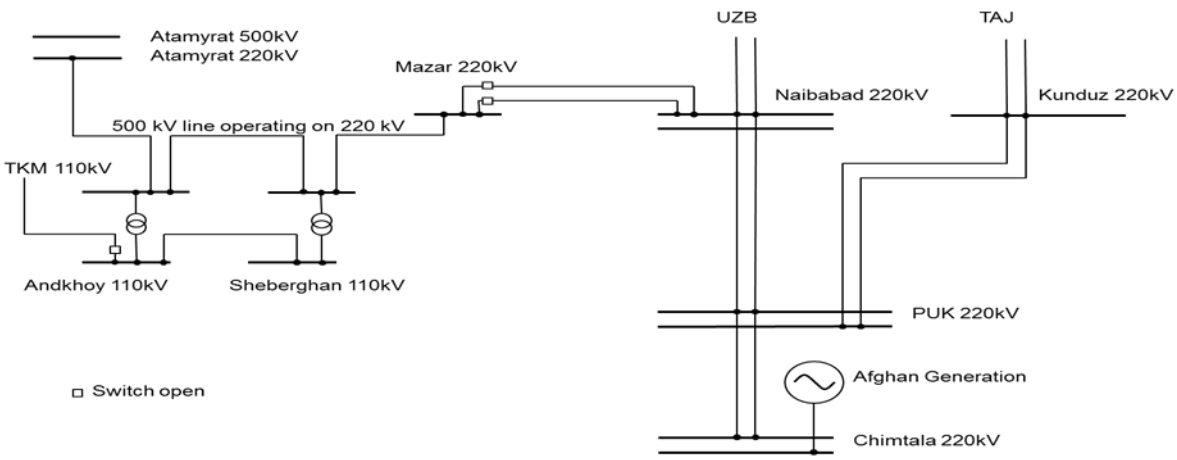

e. **Phase 4 -- comprises** 2x500 MW HVDC B2B at 500 kV, importing 1,000 MW from TKM, 300 MW from UZB, 300 MW from TAJ, Afghan generation feeding to national grid and 1,000 MW export possibility to Pakistan

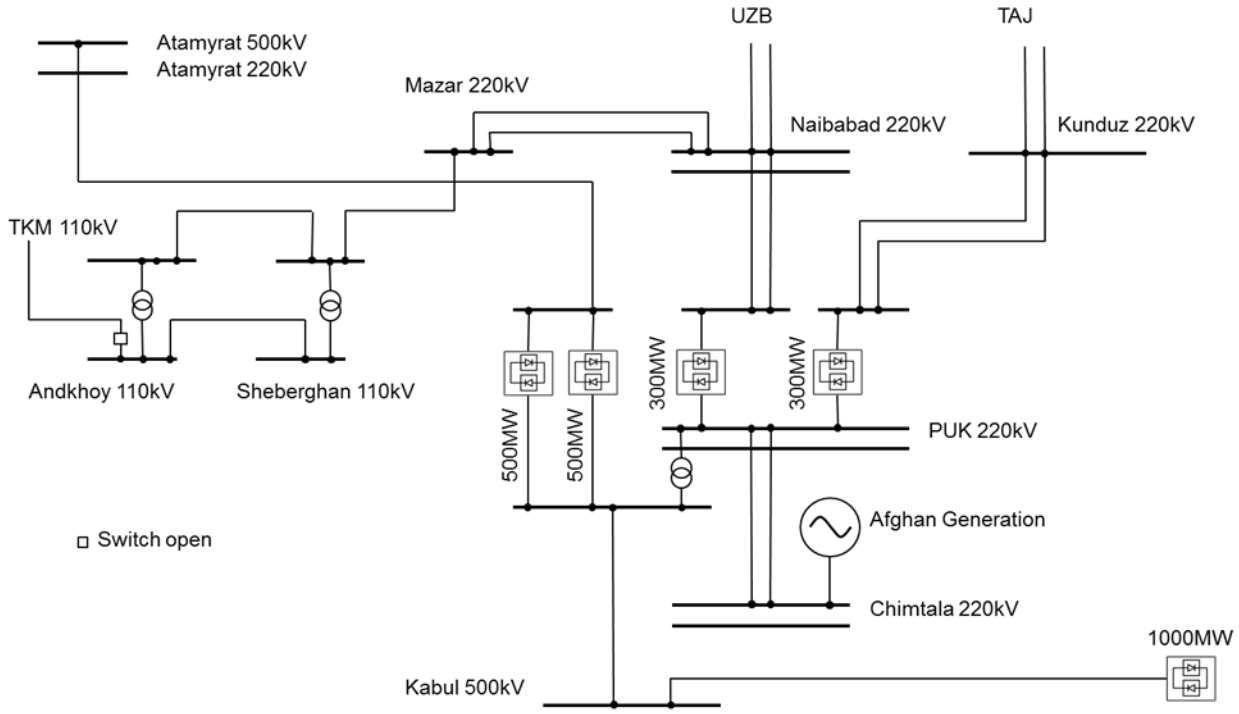

5. Any other possible option to import power from CAR countries to Pakistan.

TUTAP, as discussed above, would export power to PAK all year round from TKM, UZB and TAJ, would meet winter shortages of TAJ, unify the AFG grid, and synchronize its own generation with imported power through the proposed B2B stations.

Annex VI: Power Purchase Agreements between Afghanistan and CAR Countries

Afghanistan – Tajikistan Power Purchase Agreement[13]

- The "Agreement #30/6-BT-MEW on energy supply" was signed between Barki Tojik (Tajikistan) and the Ministry of Energy and Water (Islamic Republic of Afghanistan), dated December 2003. It governs the imports via the 110 kV line from Geran Substation in Tajikistan to Kunduz Substation in Afghanistan. The PPA was originally concluded for a period of six years until December 2009, but it was extended for another five years until 2014. It does not provide for firm energy deliveries. The delivery schedule is to be agreed upon between the parties. The tariff is fixed at 2.0 cents/kWh over the term of the PPA.
- Power Purchase and Sale Agreement between Barki Tojik (Tajikistan) and DABM, dated August 2008. This power purchase agreement governs the import from Sangtuda HPP in Tajikistan via the double circuit 220 kV line linking Sangtuda SS and Kunduz SS. The "Power Purchase and Sale Agreement" between Barki Tojik Tajikistan and DABM, the predecessor of DABS, was signed in August 2008 for a period of 20 years. Phase I of the PPA started in April 2010. Phase II will start in May 2015.

The firm delivery schedule is agreed to on a monthly basis for the years 2010 to 2014. Imports are limited to the summer months from April to October; total contractually agreed imports increase from 500 GWh in 2010 to 651 GWh in 2014. The PPA also provides daily and hourly firm energy schedules.

The PPA does not provide for firm imports from November to March, but since the commissioning of Sangtuda HPP Barki Tojik has supplied approximately 10 MW non-firm energy in winter, an increase of this supply to 60 MW is currently under negotiation.

The annual delivery schedule for Phase II, starting in 2015, will be confirmed in 2013, depending on the additional generation and transmission assets to be constructed.

The tariff to be paid for firm, non-firm, testing and unscheduled energy is 3.5 cents/kWh in 2010. This tariff will be increased by 2% annually during Phase I; the escalation will continue in Phase II unless otherwise agreed.

In case of under-delivery of firm energy, Barki Tojik has to pay a penalty, provided that during a six-month period less than 85% of the committed energy was delivered. Likewise, DABS is required to pay a penalty for under-acceptance when less than 85% of the committed firm energy was accepted. The penalty increases from 100% of the tariff in 2010 to 104% of the tariff from 2012 onwards.

[13] Islamic Republic of Afghanistan: Power Sector Master Plan: May 2013

Afghanistan – Turkmenistan Power Purchase Agreement[14]

In 2002, the MEW and the Ministry of Energy and Industry of Turkmenistan signed two PPAs for energy imports via 110 kV transmission lines:

- KEN - 02/03 for the supply from Zernow SS in Turkmenistan to Andkhoy.
- KEN - 02/04 for the supply from Mary SS in Turkmenistan to Tourgundi and Herat.

Both PPAs have similar conditions. They are extended annually, and the amendments indicate the annual energy to be supplied, as well as the price. From 2002 to 2011 the tariff had been 2.0 cents/kWh. In 2012 it was increased to 2.8 cents/kWh. The 7th amendment to the PPA for the supply of Andkhoy (KEN - 02/03) provides for supply of 200 GWh in 2012; the committed energy for the supply of Tourgundi (KEN - 02/04) is not known to the consultant.

The tender for an upgrade of the transmission line from Mary SS to Tourgundi and Herat (220 kV) is currently being prepared. The principles of the PPA KEN 02/04 will also apply to the import of power over this line, but the tariff will be renegotiated; it is expected to be at least 3.0 cents/kWh.

- Amendment No. 6 to Contract No. KEN-02/03 between the Ministry of Power Engineering and Industry (Turkmenistan) and the Ministry of Energy and Water (Islamic Republic of Afghanistan) on delivery of electrical energy in direction of Imamnazar - Andkhoy, dated 2002.

Afghanistan – Uzbekistan Power Purchase Agreement[15]

Afghanistan has a PPA with Uzbekenergo for the supply from Surkhan SS (Uzbekistan) to Hairatan (Afghanistan). The PPA has not been made available to the consultant. According to verbal information from DABS, Uzbekistan currently provides 500 GWh of firm energy per year. It is intended to increase the supply to 800 GWh and then to 1,200 GWh in 2012.

The import tariff is 6.0 cents/kWh. If DABS accepts less than the agreed energy minus 10%, it has to pay a penalty of 7.5 cents (equivalent to 125% of the tariff) for the difference; if Uzbekistan supplies less than the agreed energy minus 10%, it has to pay a similar penalty for the shortfall.

A new PPA needs to be agreed between MEW and Uzbekenergo when the 110 kV line from Amu SS (Uzbekistan) to Hairatan (Afghanistan) is energized again; the line is currently out of operation. The tariff for the supply of approximately 80 MW still needs to be negotiated, it is assumed to be between 6.0 and 7.0 cents/kWh.

Afghanistan – Iran Power Purchase Agreement[16]

The "Agreement for Construction of Transmission Line and Power Purchase" was signed between MEW and the Ministry of Energy of the Islamic Republic of Iran in January 2003

[14] Islamic Republic of Afghanistan: Power Sector Master Plan: May 2013
[15] Islamic Republic of Afghanistan: Power Sector Master Plan: May 2013
[16] Islamic Republic of Afghanistan: Power Sector Master Plan: May 2013

(1388). The PPA had a duration of four years until March 2007. In January 2010 the agreement was extended retroactively by another nine years until 2015 (1394).

The PPA covers imports via:

- the 132 kV line from Taibat to Herat
- the 20 kV line from Turbat-e-Jam SS to Herat and • the 20 kV line from Zohak SS/Zabul to Zaranj.

The PPA provides for an annual supply of 200 ± 5 GWh with a maximum capacity of 90 MW. It is intended to increase the supply of 90 MW by 60 MW to 150 MW. The agreement is expected to be signed in mid-2012.

The 20 kV line from Zabul SS to Zaranj has a maximum capacity of 10 MW.

The import tariff is 4.0 cents/kWh, of which 3.0 cents are to be paid by DABS and 1.0 cent is drawn from the Iran Aid to Afghanistan. The tariff to be paid by DABS will remain at 3.0 cents/kWh, even if Iran Aid is discontinued.

A new 132 kV transmission line from Iran SS to Farah is in the planning stage. It is intended to increase the supply via the new line step-wise, similar to the imports via the existing 132 kV line. The conditions of the existing PPA would also apply to the new line.

Annex VII:
Generation, Consumption and Power Export Potential – Per Turkmenistan Plans (Years 2013 – 2020)

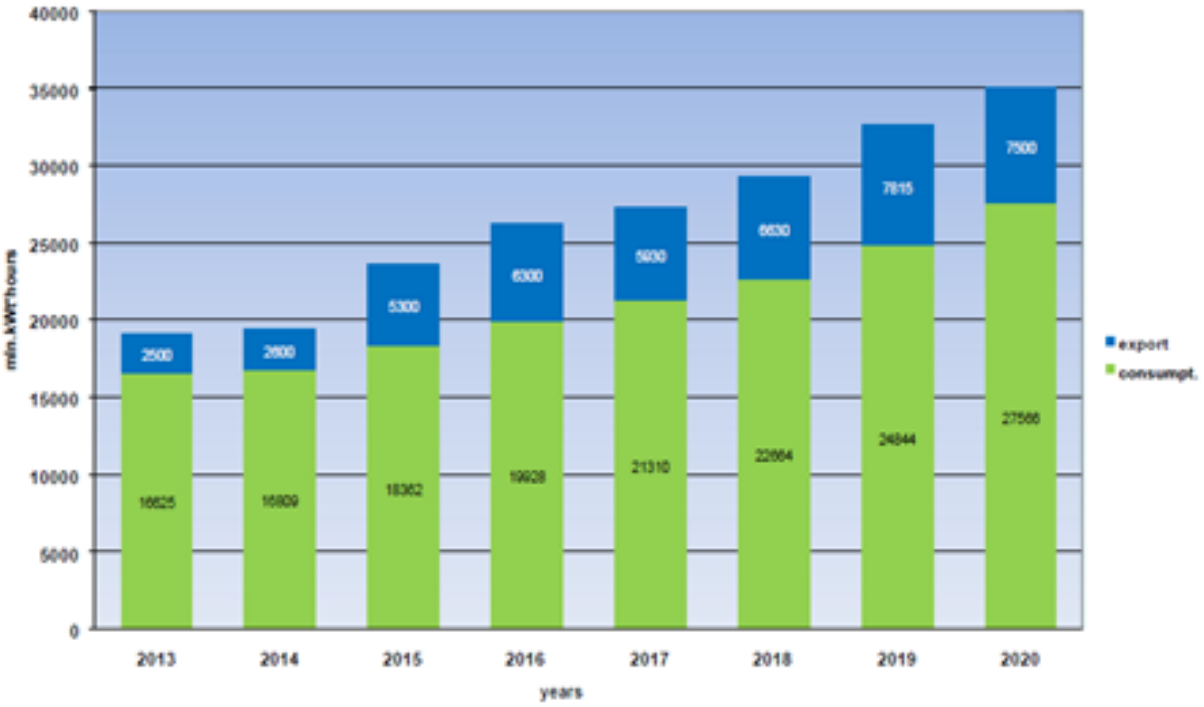

Annex VIII:
North East Power System (NEPS) Afghanistan

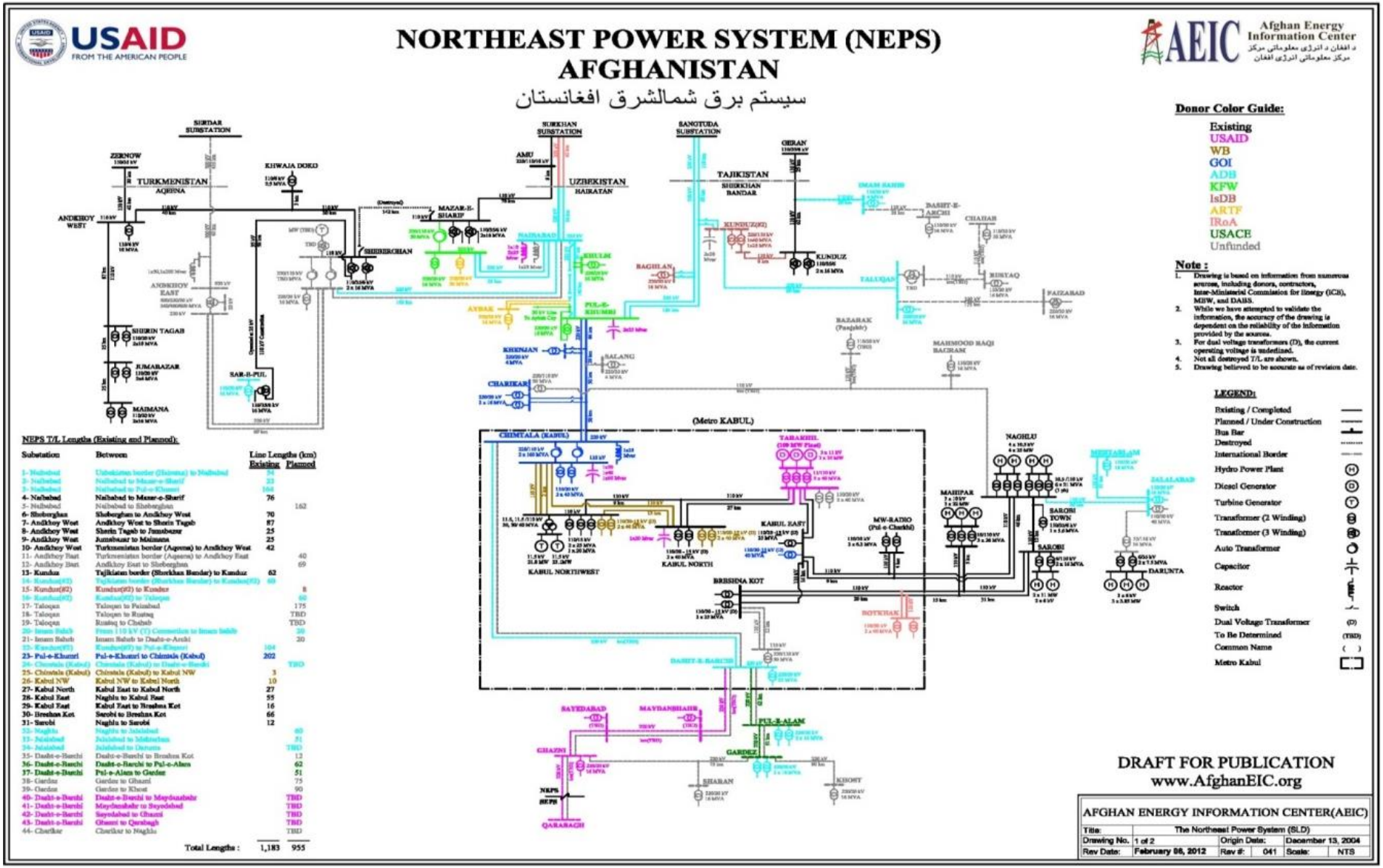
USAID
FROM THE AMERICAN PEOPLE
NORTHEAST POWER SYSTEM (NEPS)
AFGHANISTAN
سیستم برق شمالشرق افغانستان
AEIC
Afghan Energy Information Center
Donor Color Guide:
Existing
USAID
WB
GOI
ADB
KFW
IsDB
ARTF
IRoA
USACE
Unfunded
Note :
1. Drawing is based on information from numerous sources, including donors, contractors, Inter-Ministerial Commission for Energy (ICE), MEW, and DABS.
2. While we have attempted to validate the information, the accuracy of the drawing is dependent on the reliability of the information provided by the sources.
3. For dual voltage transformers (D), the current operating voltage is undefined.
4. Not all destroyed T/L are shown.
5. Drawing believed to be accurate as of revision date.
LEGEND:
Existing / Completed
Planned / Under Construction
Bus Bar
Destroyed
International Border
Hydro Power Plant
Diesel Generator
Turbine Generator
Transformer (2 Winding)
Transformer (3 Winding)
Auto Transformer
Capacitor
Reactor
Switch
Dual Voltage Transformer
To Be Determined
Common Name
Metro Kabul
SIRDAR SUBSTATION
SURKHAN SUBSTATION
SANGTUDA SUBSTATION
TURKMENISTAN
UZBEKISTAN
TAJIKISTAN
(Metro KABUL)
NEPS T/L Lengths (Existing and Planned):
Substation | Between | Line Lengths (km) Existing | Planned
Total Lengths : 1,183 955
DRAFT FOR PUBLICATION
www.AfghanEIC.org
AFGHAN ENERGY INFORMATION CENTER(AEIC)
Title: The Northeast Power System (SLD)
Drawing No. 1 of 2
Origin Date: December 13, 2004
Rev Date: February 06, 2012
Rev #: 041
Scale: NTS

Annex IX:
Existing Afghan Power System

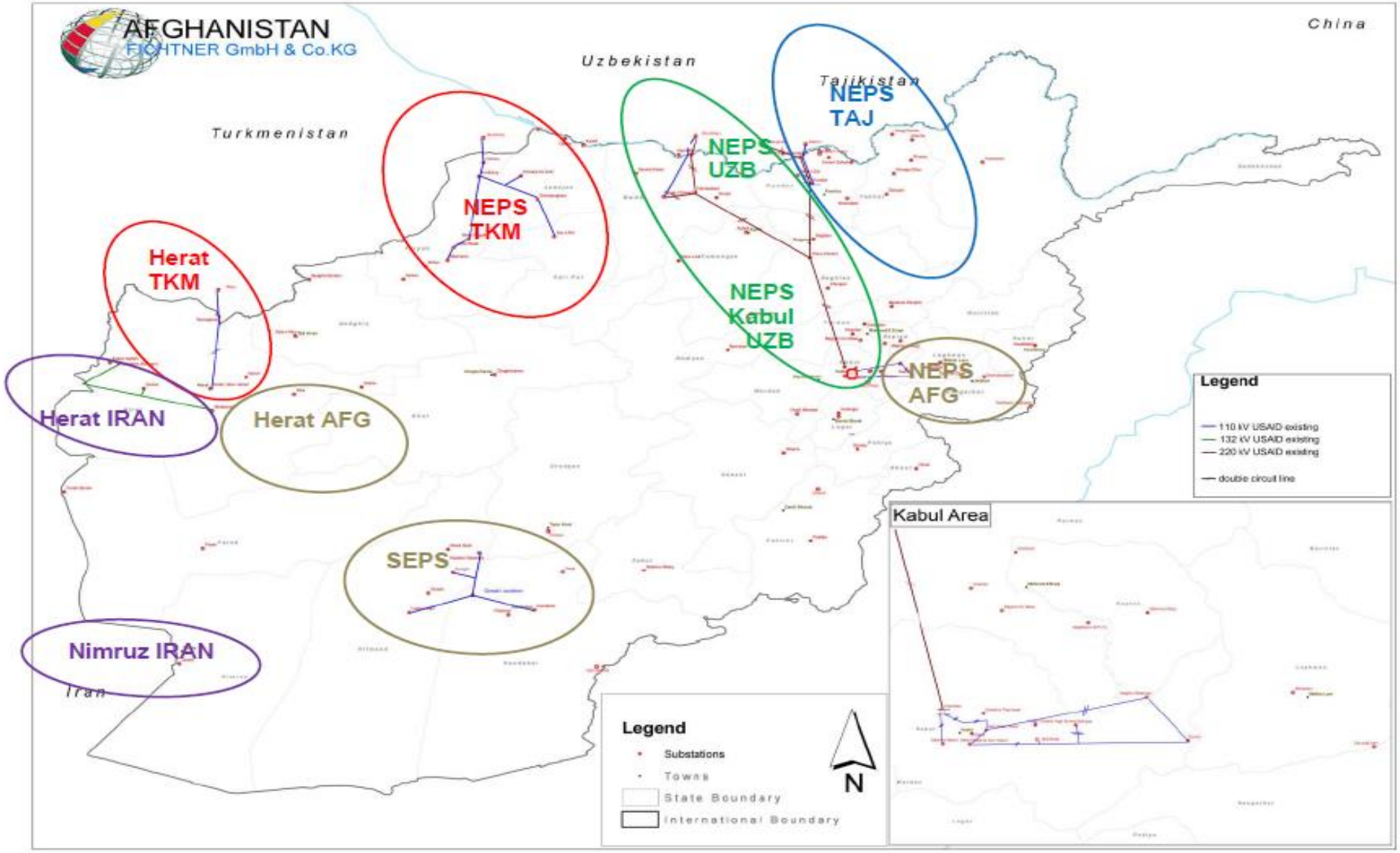
AFGHANISTAN
FICHTNER GmbH & Co.KG
Uzbekistan
China
Tajikistan
Turkmenistan
NEPS TAJ
NEPS UZB
NEPS TKM
Herat TKM
NEPS Kabul UZB
NEPS AFG
Herat IRAN
Herat AFG
SEPS
Nimruz IRAN
Iran
Legend
110 kV USAID existing
132 kV USAID existing
220 kV USAID existing
double circuit line
Kabul Area
Legend
Substations
Towns
State Boundary
International Boundary
N

Annex X:
Conceptual Layout of Transmission Lines and HVAC/DC Converters in CASA-1000 Project

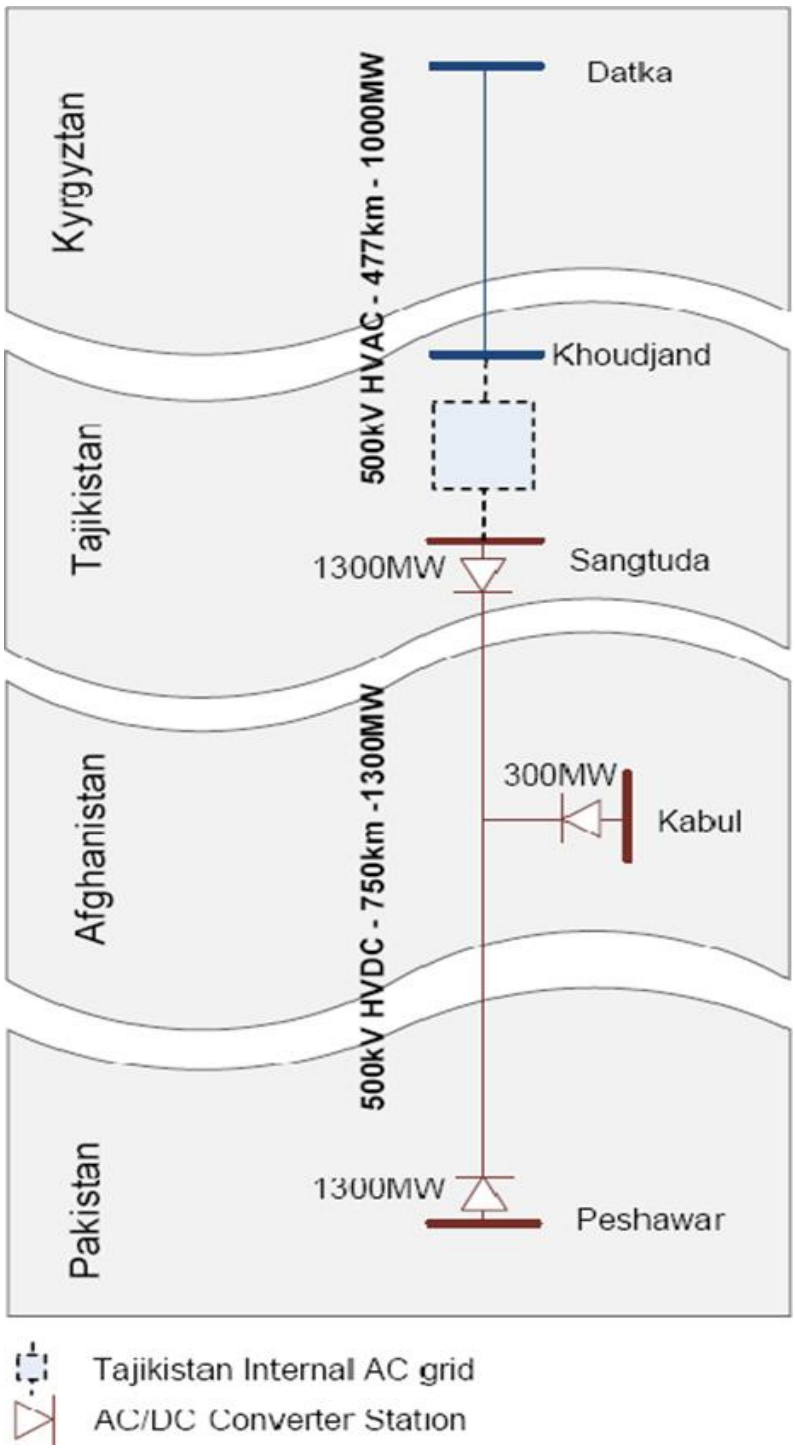

Annex XI:
Physical Routing of CASA – 1000 Transmission Lines

Annex XII:
Cost Estimates for Construction of the Proposed Transmission Line Sections between Afghanistan and Pakistan

Khost-Bannu Section

1. Construction of 220 kV Double circuit Khost- Bannu section of Transmission line:
   160 km x0.25 million/km = 40 m USD
2. Construction of two 220 kV line bays (one each at Khost and Bannu):
3. 0.35x2 = 0.70 million USD
4. Stringing of 2nd circuit of the Kabul to Gardez section of the transmission line:
5. 140 km x0.06 $m/km = 8.5 m USD

   (Stringing of twin bundle double circuit with rail conductor approx. costs 0.06 m USD/km)

   Total for above: (1 + 2 + 3) = 49.2 m USD

   – Cost increase from difficult (mountainous) terrain: 49.2x1.25*= 61.50 m USD
     (Terrain Factor PAK experience: 1.25*; US Exp.: 1.3*)
   – Security related cost increase: 61.50x1.33 =82m USD; Say = **85 m USD**
     (Security Factor of 1.33 is based on Iraq IRMO/ITAO Experience)

Gardez-Khost Section

1. Construction 220 kV Gardez- Khost: 100 km x0.25 = 25 m USD
2. Increase in cost from difficult terrain: 25x1.25 = 31.25 m USD
3. Security related cost increase: 31.25x1.33 = 41.65 ≈ **45 m USD**

   – **Grand Total** Gardez-Bannu Interconnection : 85+45 = **130 m USD**

Energy Policy Program
House 4, Street 88, G-6/3, Islamabad, Pakistan
Tel: +92 51 835 7072, Fax: +92 51 835 7071
www.ep-ep.com.pk