USAID FROM THE AMERICAN PEOPLE

BILL & MELINDA GATES foundation

REPORT

Assembly, Operation and Maintenance of the Portable Shallow-Bed Batch Maize Dryer

AflaSTOP: Storage and Drying For Aflatoxin Prevention

October 2015

Implemented by:

Meridian Institute

Connecting People to Solve Problems

ACDI VOCA

Expanding Opportunities Worldwide

ASI

Make It Happen

In Support of:

PACA

Partnership for Aflatoxin Control in Africa

Prepared by:
Marius Rossouw
Design Engineer
marius@catapultdesign.org

Catapult Design
1031 33rd Street, Ste 174
Denver, CO 80205

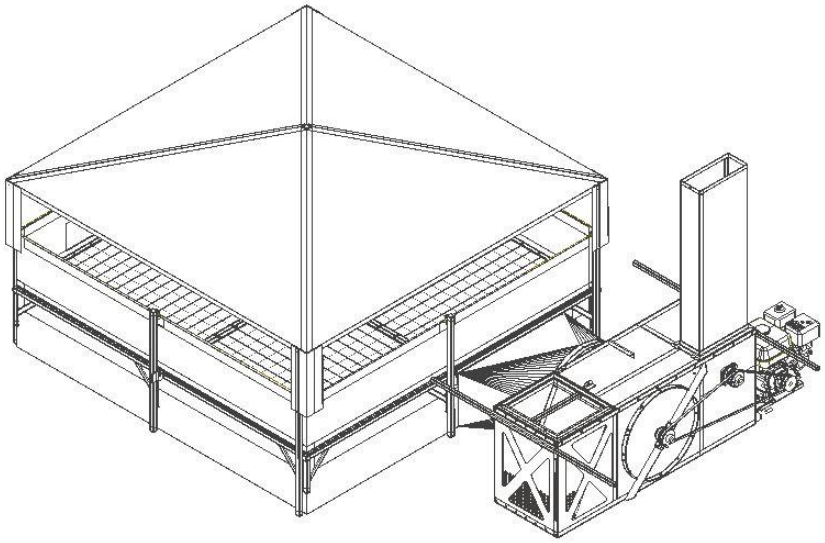

CATAPULTDESIGN

catapultdesign.org | Billions of people lack access to life's basic needs. We design and implement human-centered products to help them thrive.

*The **AflaSTOP: Storage and Drying for Aflatoxin Prevention (AflaSTOP) project** is identifying the most promising storage options to arrest the growth of aflatoxin and designing viable drying options that will allow smallholder farmers to dry their grain to safe storage levels. The project works to ensure that businesses operating in Africa are able to provide these devices to smallholder farmers. It is jointly implemented by ACDI/VOCA and its affiliate Agribusiness Systems International (ASI) under the direction of Meridian Institute. For more information on AflaSTOP and other key reports and resources, visit: www.acdivoca.org/aflastop-publications.*

This work was carried out as a partnership between Catapult Design and Agribusiness Systems International (ASI) through the AflaSTOP project to identify potential drying technology suited to support post-harvest handling devices for maize smallholder farmers.

TABLE OF CONTENTS

1. Portable Shallow-bed Batch Assembly 5
   1.1 Portable Shallow-bed Batch Dryer Components 5
   2.1 Portable Shallow-bed Batch Dryer Assembly Procedure 8
2. Portable Shallow-bed Batch Dryer Operation 11
3. Portable Shallow-bed Batch Dryer Maintenance 12

1. Portable Shallow-bed Batch Assembly

1.1 Portable Shallow-bed Batch Dryer Components

1.

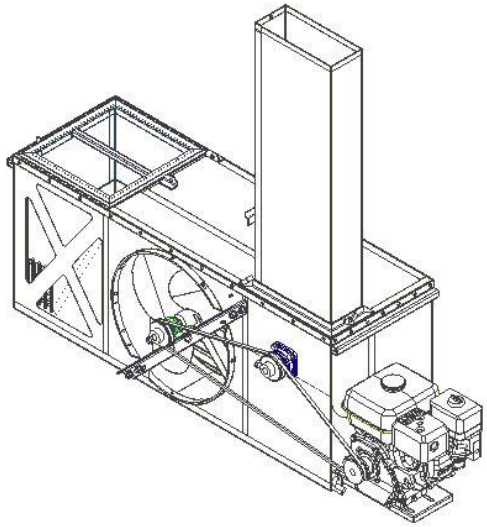

1 X Drying Air Supply Unit

1.1

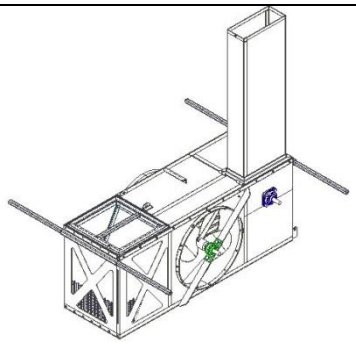

1 x Main Drying Unit Body

1.2

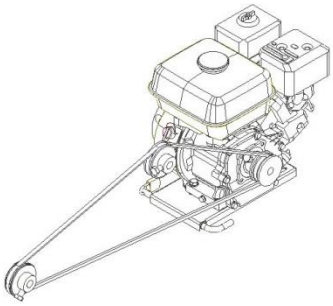

1 x 5.5 HP Engine with V-belt drive

2.

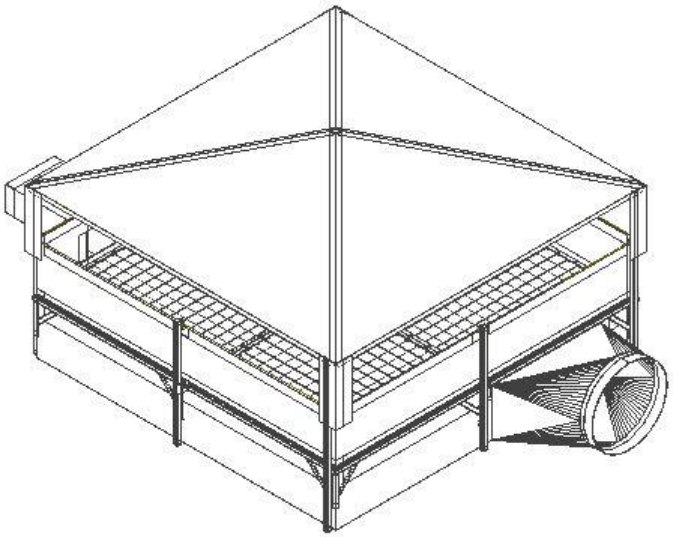

1 X Shallow-bed Unit

2.1

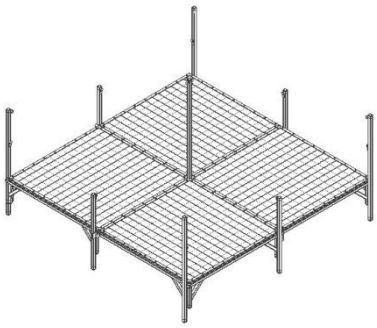

1 X Structural Steel Beds

2.2

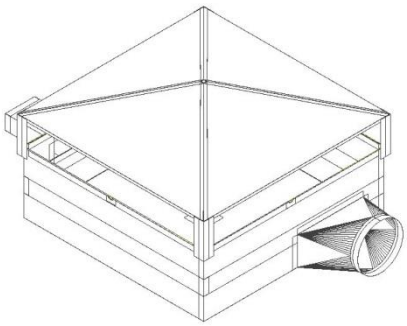

1 X PVC Canvas Plenum and Rainfly

1.1

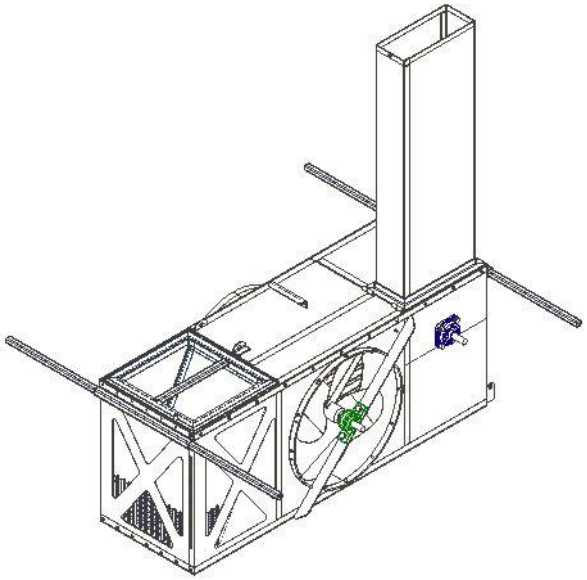

1 X Main Drying Unit Body

1.1.1

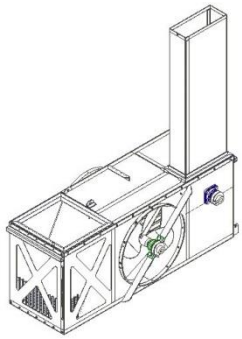

1 x Main Body

1.1.2

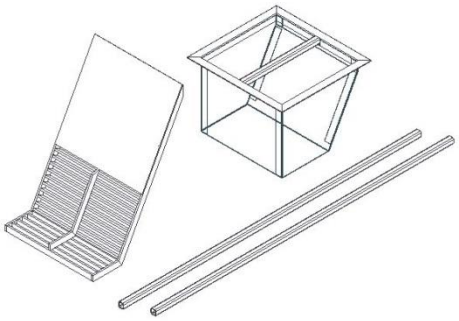

1 x Cob Drying Basket
1 X Fire Grate
2 X Handles

1.2

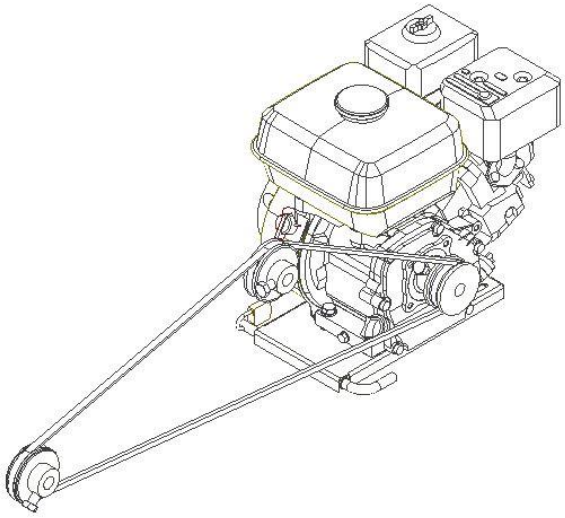

1 x 5.5 HP Engine with V-belt drive

1.2.1

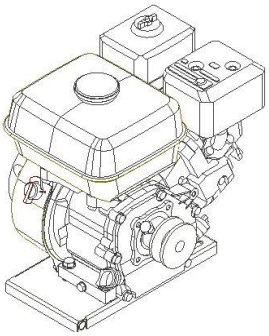

1 x 5.5 HP Engine on Baseplate

1.2.2

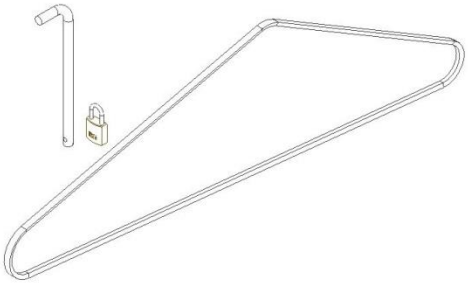

1 X Hinge Pin
1 X Pad lock
1 X V-belt

2.1

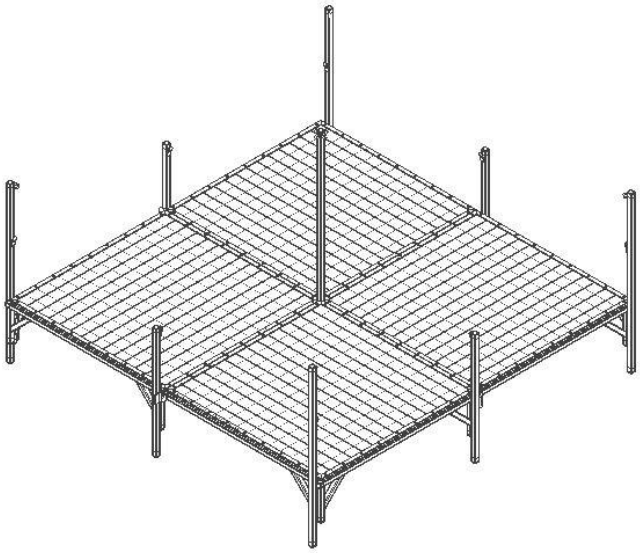

1 X Structural Steel Beds

2.1.1

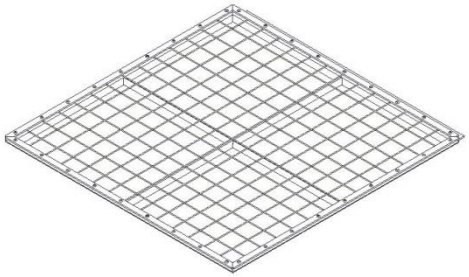

4 x Bed Panels

2.1.2

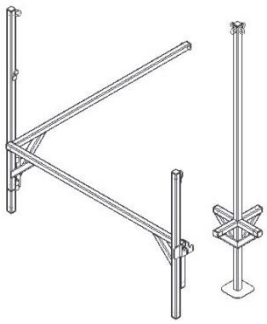

4 x Collapsible Bedframes
1 X Center Support

2.2

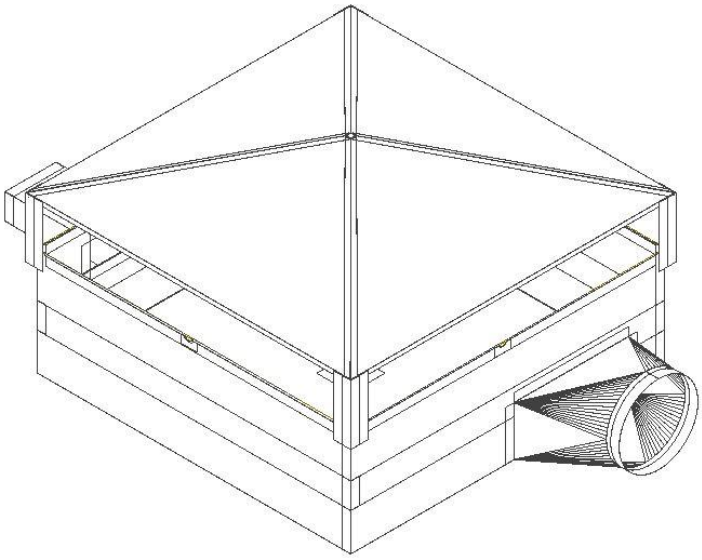

1 X PVC Canvas Plenum and Rainfly

2.2.1

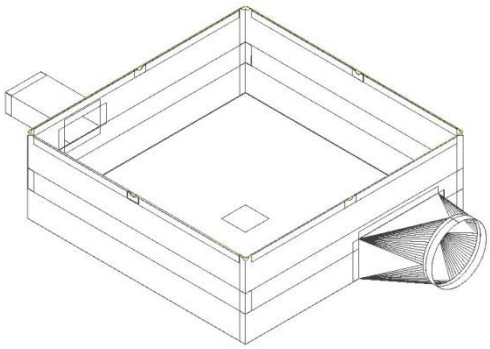

1 X PVC Canvas Plenum
1 X Inner Tube Elastic Strap

2.2.2

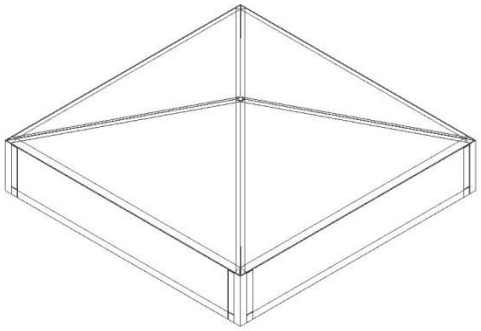

1 X Rainfly
1 X Support Rope

2.1 Portable Shallow-bed Batch Dryer Assembly Procedure

Step 1: Transportation. 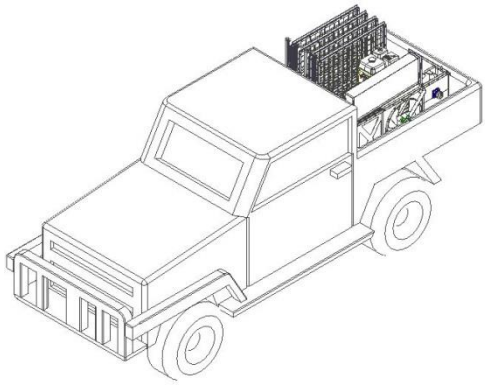 Transport the dryer to the desired drying location.	Step 2: Offloading the drying air unit. 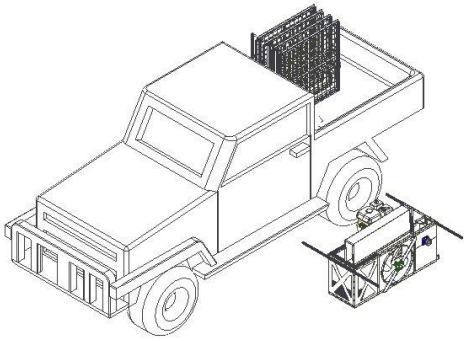 Unload the dryer using the removable square tube handles.
Step 3: Offloading the shallow-bed. 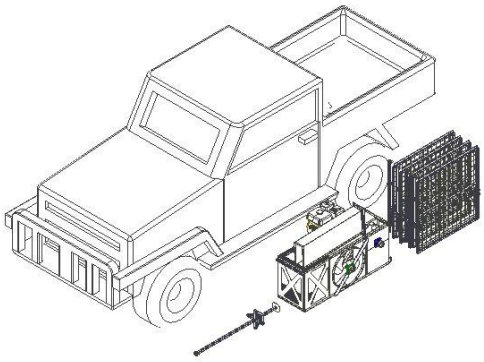 Unload the shallow-bed components and remove the vehicle.	Step 4: Preparing the drying area. 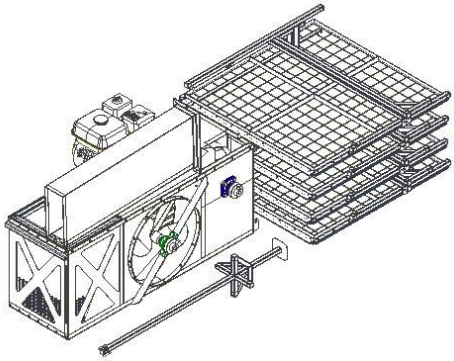 Prepare the drying area by removing any object that may puncture the plenum.
Step 5: Staring the bed frame assembly. 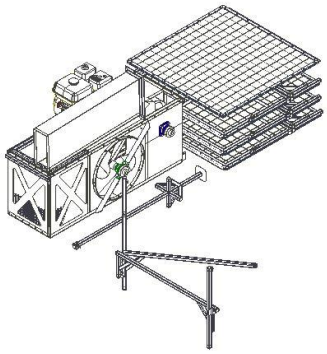 Unfold one collapsible bedframe support and stand it on end.	Step 6: Interlocking the bedframes. 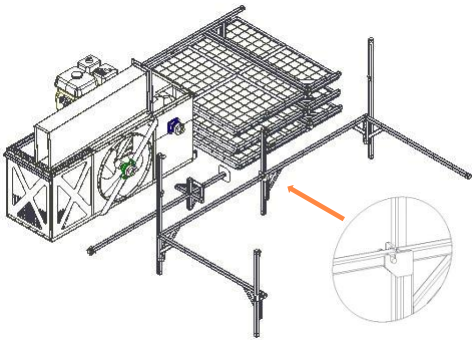 Connect the first unfolded bedframe with a second by slotting the pin of the first bedframe into the receiving catch of the second bedframe.

Step 7: Completing the bed frame assembly. 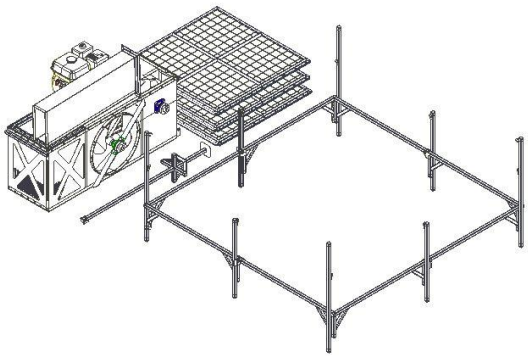 Complete the bedframe assembly by connecting the remaining bed frames in a similar manner.	Step 8: Securing the plenum. 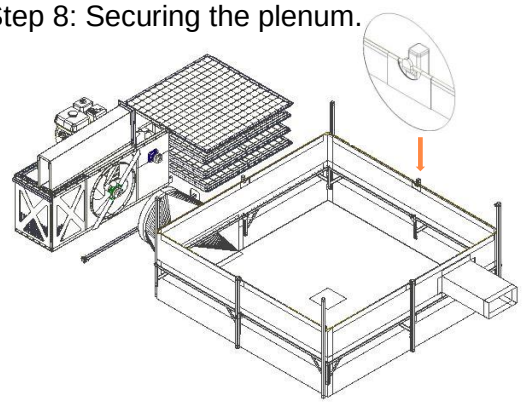 Place the PVC canvas plenum inside the completed bedframe and clip the perimeter rope at the top of the sidewalls into the receiving clips om the stanchions.
Step 9: Placing the first bed panel. 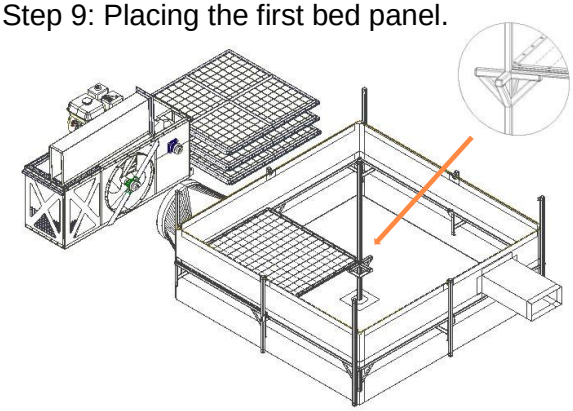 Place the first bedframe inside the PVC pinching the plenum in the process. Rest the inside corner on the center support.	Step 10: Completing the bed panels. 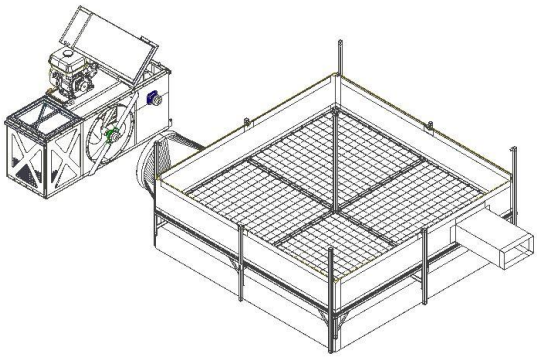 Complete the bed assembly and prepare the drying unit by undoing the wingnut holding the chimney down for transport.
Step 11: Securing the chimney. 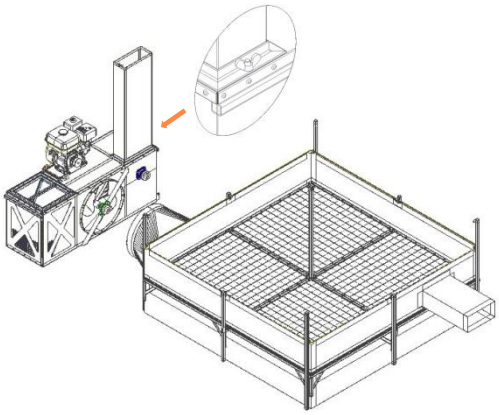 Secure the chimney by fastening it with the wingnut that held it in place for transport.	Step 12: Securing the engine. 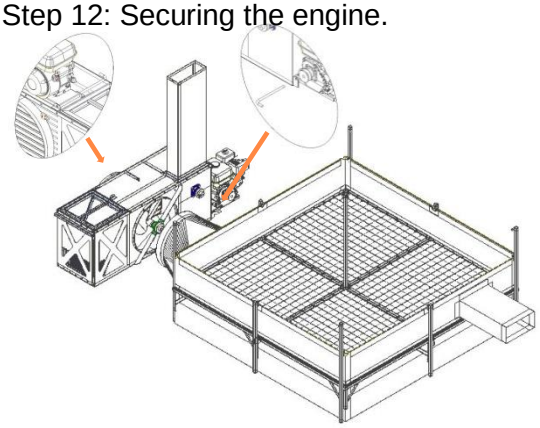 Remove the engine from its transportation stowage attachment by unlocking the pad lock and removing the hinge pin. Move the engine to the receiving hinge supports and replace the pin and padlock.

Step 13: Connecting the V-belt drive. 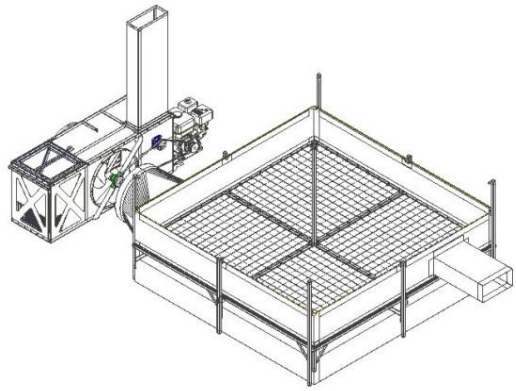 Connect the v-belt between the 450 mm fan pulley, the 300 m fan pulley and the drive pulley on the engine by tilting the engine towards the drying air unit. The weight if the engine will ensure sufficient belt tension.	Step 14: Connecting the shallow-bed to the drying air unit. 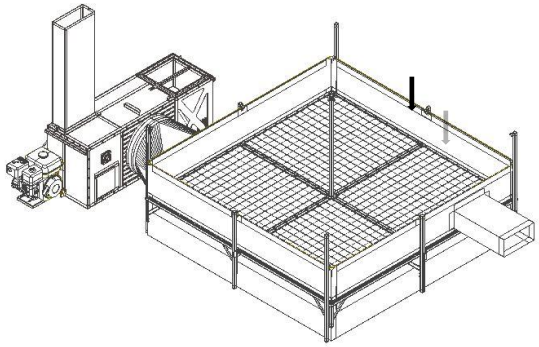 Connect the drying air supply unit to the shallow-bed by tying the connecting duct with an elastic inner tube strap. The Portable Shallow-bed Batch Dryer is now ready for operation.
Step 15*: Setting the rainfly support rope. 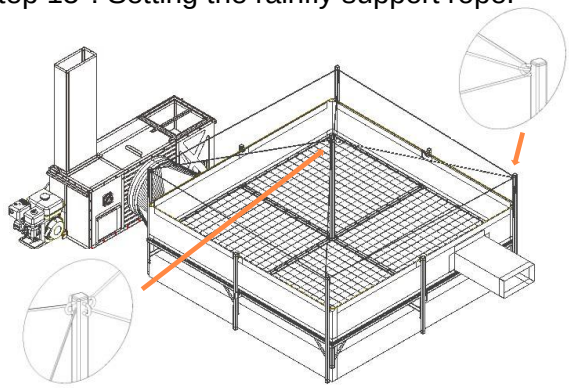 Secure the rainfly support rope by running it through the provided loops welded to the bed frame uprights and the center bed support. **Steps 15 – 18 optional in the event of rain.*	Step 16*: Installing the rainfly. 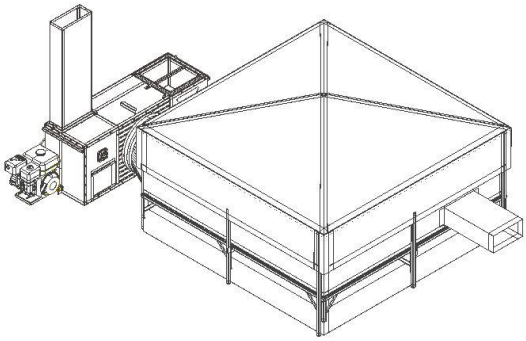 Drape the PVC canvas over the shallow-bed, ensuring that the side panels are placed on the outside of the plenum sidewalls and reaches below the top edge.
Step 17*: Opening side panel for processing. 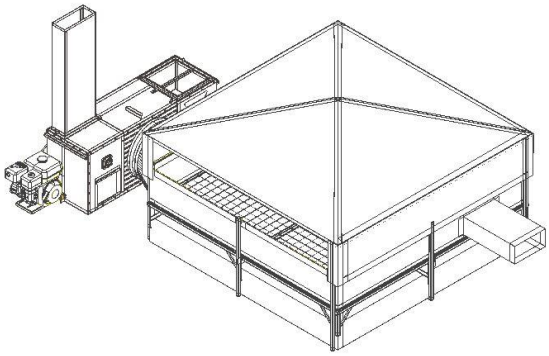 One side panel facing away from driving rain can be raised to process the maize.	Step 18*: Opening all side panels in case rain subsides. 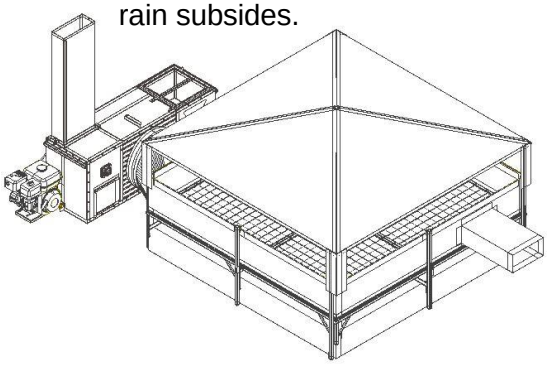 Side panels can be retracted when rain subsides.

2. Portable Shallow-bed Batch Dryer Operation

Step 1: Loading the maize.

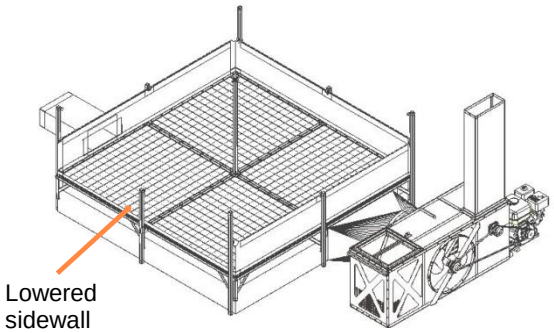

Load 5 - 6 bags (+/- 500 kg) of wet maize onto the shallow bed by either placing a sack over the sidewalls onto the bed or emptying it or by lowering one of the canvas plenum sidewalls.

Step 2: Igniting the furnace.

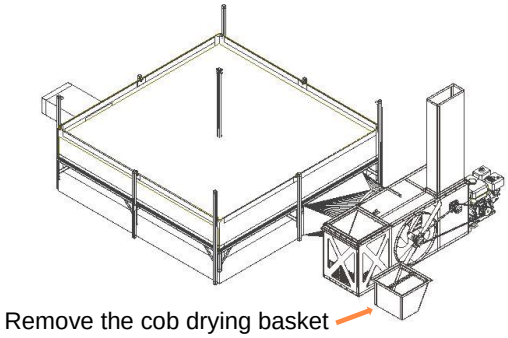

Remove the cob drying basket and ignite a fire in the furnace by placing dry flammable biomass such as maize cobs or stower on top of the fire grate and setting it alight.

Step 3: Starting the engine.

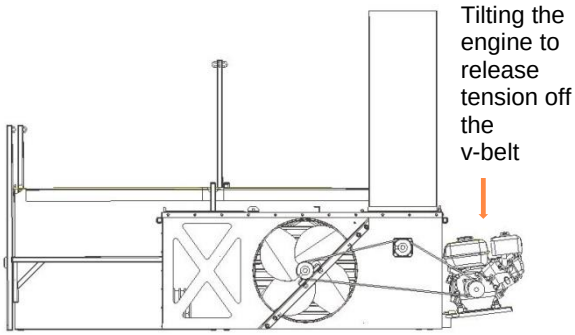

Start the engine by first releasing tension off the v-belt by tilting the engine towards the drying air unit body. Drop it down slowly once the engine comes up to idle under full torque (2100 RPM). **Do not increase the RPM beyond idle.**

Step 4: Processing the maize.

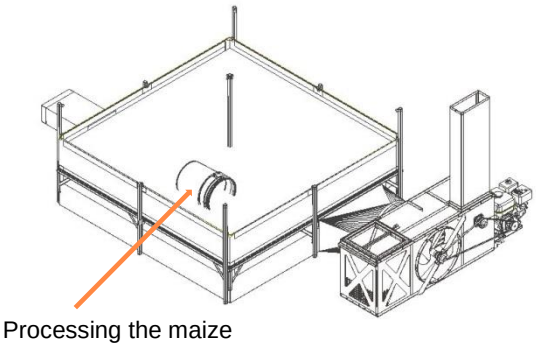

Process the maize every 30 min by stirring by hand or using a utensil such as a bucket or a rake. Ensure that maize is circulated thoroughly throughout the shallow-bed and that hot maize in closest contact with the drying air is moved to the top.

Step 5: Feeding the furnace.

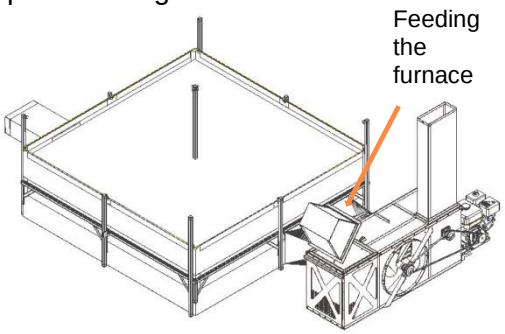

Feed the furnace regularly with dry cobs or cobs that had some time drying/preheating in the cob drying basket above the furnace.

Step 6: Offloading the dried maize

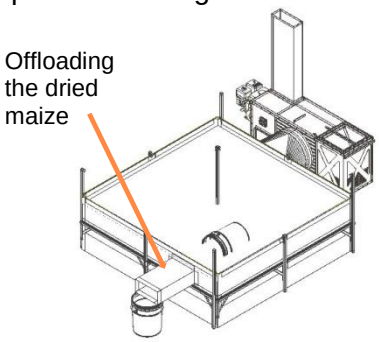

Once dry, offload the dried maize into awaiting containers (buckets or sacks) via the offloading canvas chute.

3. Portable Shallow-bed Batch Dryer Maintenance

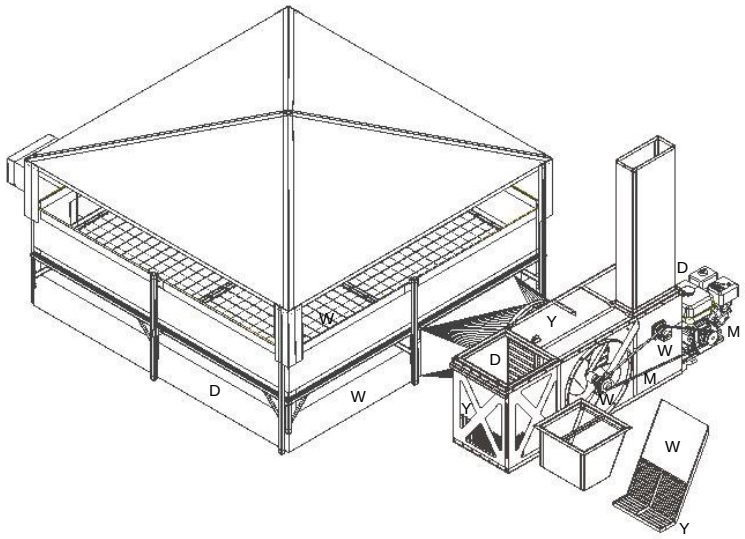

Daly (D):

- Refill petrol
- Remove ash
- Clean plenum

Weekly (W):

- Lubricate bearings
- Clean fire grate
- Check plenum
- Check bed mesh

Monthly (M):

- Service engine
- Check v-belt

Yearly (Y):

- Check HX panels
- Check furnace body
- Check fire grate

Daly Schedule:

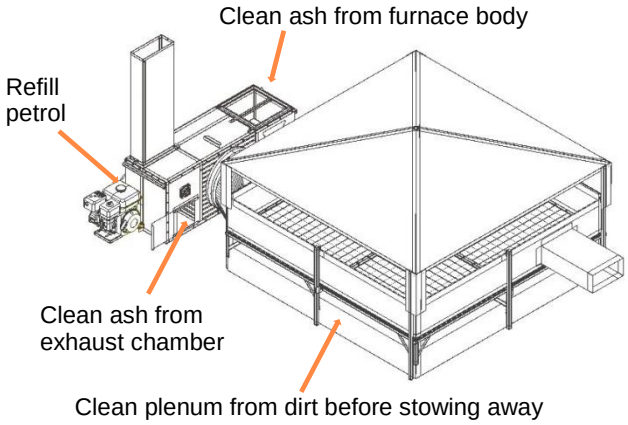

Weekly Schedule:

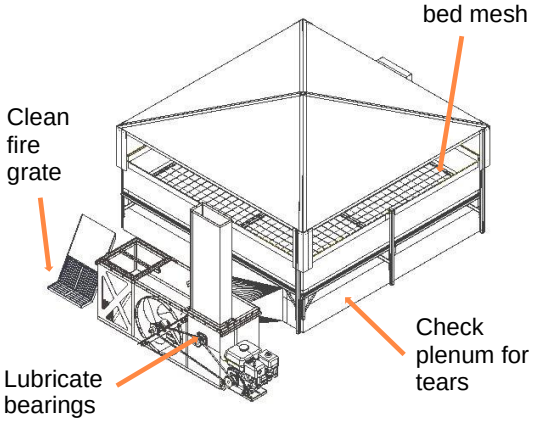

Monthly Schedule:

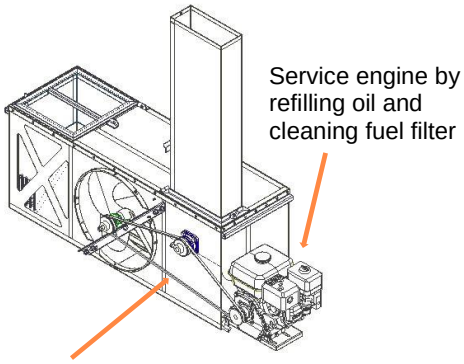
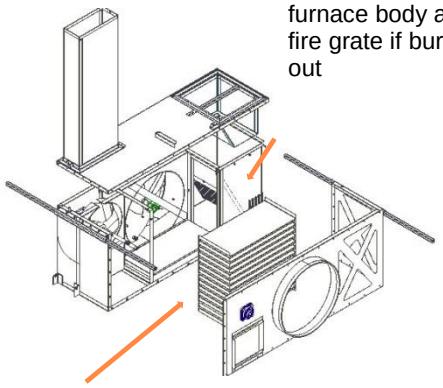
Yearly Schedule: