The E-Bike: Practical, Scalable, Pollution-Free Mobile Transportation

Monthly Report 1

October 30, 2010

Awardee	SiGNa Chemistry Alternative Energy Division 720 Olive Drive, Suite C Davis, CA 95616 Grant# AID-OAA-G-10-00012
Primary Contact	Andrew P. Wallace Vice-President of Alternative Energy / Principal Investigator Phone: (530) 554-2217 Email: apwallace@signachem.com Website: www.signachem.com
Type of Business	Small, for-profit business
Other Funders	No other organizations are funding this work
Representative Signature	Andrew P. Wallace
Representative Title	Vice-President of Alternative Energy / Principal Investigator

The E-Bike: Practical, Scalable, Pollution-Free Mobile Transportation

Technical Objective (included for reference)

Award Type: Stage 1

In this program, SiGNa Chemistry is developing the E-Bike, an affordable fuel cell-powered bicycle that provides both a clean, efficient mode of transportation and a portable, general purpose power source. The fuel cell power system will incorporate SiGNa's unique clean energy storage solution, which operates at one-sixth the cost, weight and volume of existing battery technologies. The prototype bicycle will be rugged, lightweight, and have a base range of up to 100 miles, which is 300% farther than the range achieved by equivalently-sized high-performance batteries. The portable power module will be designed for easy removal from the bicycle so that it can also be used as a stand-alone power source for non-transportation functions, like powering pumps, lights, cell phones, etc. The only emissions from the E-Bike will be water vapor and air, which is not the case with scooters powered by internal combustion engines (one of the highest emitters of green-house gases and air pollutants).

The technology in this program will dramatically improve the lives of tens of millions of people in developing countries. The E-Bike and its power module will have three primary uses: (1) as a long-range, pollution-free, powered transportation alternative, (2) as a general purpose mobile power source, and (3) as a transportation and power platform in emergency or disaster relief efforts. A key differentiator for this system is its portable power module, which is designed to operate independently from the electric bicycle. This technology will provide millions of people with access to a stable, general purpose mobile power source that can operate, for example, computers, cell phones, refrigerators, or water pumps. *As more than 1.45 billion people worldwide do not have access to electricity (IEA 2009), the scaling potential for this portable power system to improve lives is staggering.* This system will also be a valuable tool in emergency or disaster situations, where the portable power module could be used to power emergency response systems, medical refrigerators, and telecommunications repeater stations.

Countless socio-economic boundaries can be bridged using this system when this technology is developed to a point that it is viable for scaled manufacturing.

Method of Approach (Included For Reference)

In the proposed Stage 1 program, SiGNa Chemistry will design, build, and test a fuel cell-powered bicycle prototype for use in developing nations and areas in need of disaster relief. The prototype bicycle and power module will be demonstrated during in-house evaluations and, potentially, in limited field trials.

Fuel Cell Technology

Fuel cells convert chemical energy (typically hydrogen) into electrical energy at significantly higher efficiencies (50%) than internal combustion engines (12-13%). The fuel cell device has no moving parts; instead, it functions like a battery with anodic and cathodic reactions (Figure 1). The only inputs are hydrogen and air and the only emissions are water, air and DC power. Because there are no moving parts, fuel cell systems typically operate for thousands of hours before maintenance is required.

Despite the advantages of fuel cell power, it has not been widely adopted, primarily because the storage of gaseous hydrogen is problematic. SiGNa Chemistry has overcome this challenge by developing a process where solid sodium silicide (NaSi) reacts with any water to instantaneously produce clean hydrogen gas. This unique NaSi material has fast reaction times, low by-product solubility, and is safe to handle in air. SiGNa's technology generates hydrogen as needed at <30 psi. More conventional hydrogen storage using compressed gas tanks would require a pressure of over 4,000 psi to store an equivalent amount of hydrogen.

a. Sodium Silicide (NaSi) Reacts with Water to Form Hydrogen

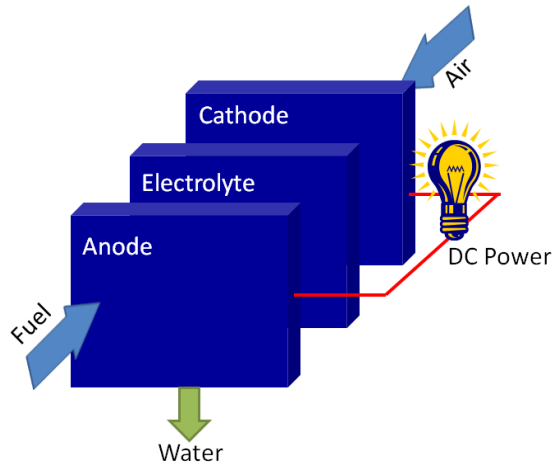

b. Hydrogen is Used as a Fuel for Zero Pollutant Portable Power

Figure 1. Hydrogen Fuel Cell Technology

E-Bike Concept

SiGNa will integrate the reliable power generator into a complete system (Figure 2a) that powers a bicycle and potentially other devices. The system's structure will center on a power manager, which communicates with multiple devices that store, produce, and consume power.

Energy, in the form of sodium silicide, will be stored in the fuel canister, where the power will also be generated. Water from a small (1 liter) reservoir is supplied to the canister. This system can use water of any quality including potable water, polluted water, sea water, or even urine. Hydrogen generated from the reaction between the water and sodium silicide is fed to the fuel cell via a hydrogen control module. The fuel cell then provides energy to the power manager. Once maximum riding distance is reached (i.e., when the sodium silicide is spent) the user is left with a non-toxic by-product (sodium silicate) contained within the disposable or reusable canister. This by-product can be used as an industrial feedstock in multiple industries, such as concrete production, glass, toothpaste, etc. Sodium silicate is also classified as a non-hazardous solid waste under RCRA and can be readily disposed of in municipal waste.

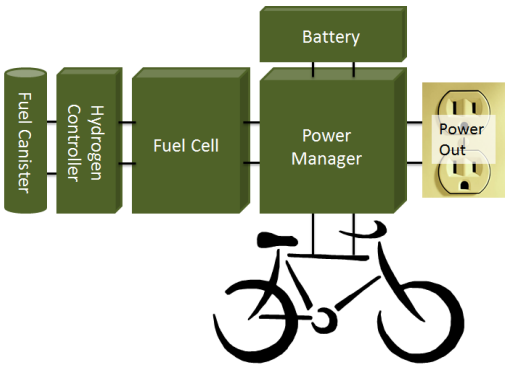

a. Proposed System Architecture

b. SiGNa's Experimental, Generation 0 Fuel Cell-Powered Bicycle.

Figure 2. Sodium Silicide and its use in a transportation application.

The E-Bike's power module will extend the range of electric bicycles from 20 to 100 miles at approximately the same weight. The range can be extended by a further 100 miles (160 km) for each additional sodium silicide cartridge (0.75 kg or 1.65 lb) carried on board with moderate pedaling. Because sodium silicide is solid and non-

flammable, these cartridges are inherently safer than other storage alternatives. For instance, a comparable compressed hydrogen system stores flammable gas at 4,000 psi (276 bar) or greater.

SiGNa has fabricated a Generation 0 experimental bicycle to test various use modes (Figure 2b). This experimental system is more of a mobile chemistry laboratory than a prototype; however, this bike is a launching point to develop a fully-refined system and prototype for this USAID program.

Program Plan

SiGNa has initiated a nine month program for the development of a prototype fuel cell electric bicycle. The program consists of three primary tasks: Design, Build, and Test. Major deliverables/milestones are associated with those tasks as follows: Design Review Package, Fabrication of First System, and a Final Report. The Final Report will document all elements of the program including final testing and verification.

Name	Duration	Start	Finish	Pre...
Stage I	**195 days**	**10/1/10 8:00 AM**	**6/30/11 5:00 PM**	
Design Integrated System	66 days	10/1/10 8:00 AM	12/31/10 5:00 PM	
Build Integrated System	64 days	1/3/11 8:00 AM	3/31/11 5:00 PM	2
Test Integrated System	65 days	4/1/11 8:00 AM	6/30/11 5:00 PM	3
Reporting and Administration	195 days	10/1/10 8:00 AM	6/30/11 5:00 PM	
Reporting and Administration	**195 days**	**10/1/10 8:00 AM**	**6/30/11 5:00 PM**	
Monthly Report 1	21 days	10/1/10 8:00 AM	10/29/10 5:00 PM	
Monthly Report 2	22 days	11/1/10 8:00 AM	11/30/10 5:00 PM	7
Monthly Report 3	23 days	12/1/10 8:00 AM	12/31/10 5:00 PM	8
Monthly Report 4	21 days	1/3/11 8:00 AM	1/31/11 5:00 PM	9
Monthly Report 5	20 days	2/1/11 8:00 AM	2/28/11 5:00 PM	10
Monthly Report 6	23 days	3/1/11 8:00 AM	3/31/11 5:00 PM	11
Monthly Report 7	21 days	4/1/11 8:00 AM	4/29/11 5:00 PM	12
Monthly Report 8	22 days	5/2/11 8:00 AM	5/31/11 5:00 PM	13
Final Report	22 days	6/1/11 8:00 AM	6/30/11 5:00 PM	14
Milestones	**195 days**	**10/1/10 8:00 AM**	**6/30/11 5:00 PM**	**1SS**
Milestone 1. Design Review Package.	66 days	10/1/10 8:00 AM	12/31/10 5:00 PM	
Milestone 2. First Assembly Completion.	64 days	1/3/11 8:00 AM	3/31/11 5:00 PM	17
Milestone 3. Delivery of Final Report.	65 days	4/1/11 8:00 AM	6/30/11 5:00 PM	18

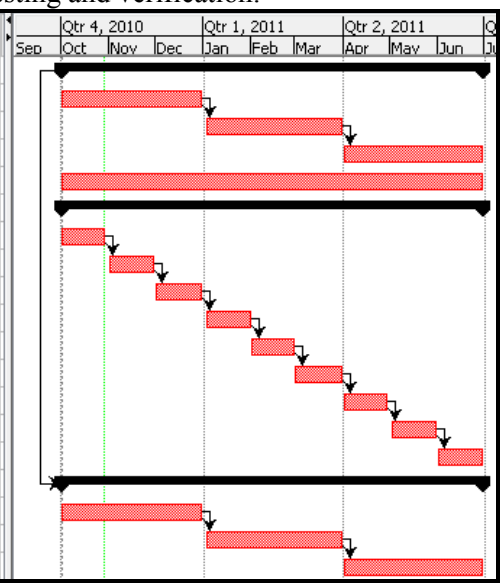

Work Plan (Overview)

To build the integrated E-Bike system, SiGNa will partner with its existing fuel cell supplier and an electric-drive bicycle manufacturer. SiGNa will integrate the individual parts to produce a prototype that can readily be demonstrated and tested by non-technical personnel.

Task 1. Design Integrated System – Systems specifications, concept development, and design

Task 2. Build Integrated System – Component procurement, assembly, and initial debugging

Task 3. Test Integrated System – System testing, system improvements, and final verification

Task 4. Reporting and Administration – Program management and reporting.

WORK PLAN (DETAILED)

Task 1. Design Integrated System (33% Complete)

SiGNa has developed preliminary specifications for the electric bicycle (Table 2) and the fuel cell power system (Table 3). It is expected that this table will be updated and modified throughout the program in preparation for Stage 2 as additional information is obtained from customers, distributors, suppliers, and USAID.

The E-Bike's speed will be regulated by the user, using a throttle and/or pedaling, to speeds up to 20 miles per hour (32 kph). Also during Stage 1, it is anticipated that input be collected and integrated from USAID on the actual specifications. The information will be as specific as possible in order to readily deploy systems in Stage 2.

Bicycle Type and Design:

There are a wide variety of electric bicycle designs and approaches, some of which are shown in Table 1. In Task 1, SiGNa will be collecting and integrating information from multiple bicycle manufacturers to determine an optimal E-Bike solution. In the end, SiGNa anticipates a flexible approach, where the core developed technology (i.e. the removable fuel cell power system) may be readily used by a variety of custom and retro-fitted E-bikes.

Table 1. Bicycle Options

Component/Style	Options	Advantages / Disadvantages / Description
Motor	Wheel Hub Motor	Low cost. Readily adaptable to bicycles.
	Gear Driven Motor	Easy to generate combined electric and pedal powder for high speed operation.
Battery	Rack Mounted	Low cost. Easy to replace.
	Frame Integral	Good use of overall volume. Even weight distribution with low center of gravity.
Cargo Location	Rear - Custom Bike	Balanced ride. Low total cost for new purchases.
	Rear - Bike Extension	Retrofits many existing bicycles.
	Front loader	Able to carry large loads. Rider can observe carried items. Difficult to pilot over rough terrain.
Cargo Options	Load Capacity	Carrying capacity increases weight and cost.
	Passenger Capable	Requires additional weight and cost. Likely higher overall safety as bikes are likely used to carry passengers whether designed to do so or not.
Frame Type	Straight Bar	Traditionally used in the US and many parts of the world.
	Step-through	Modern materials and design may make a step-through more appropriate for a wider range of rider weights and heights.
Transport	Traditional	Traditional bikes may be transported on special car racks and in the back of trucks
	Folding	Folding bikes may take up little volume when stored or transported. However, these bikes are also heavy, expensive and often compromise performance for transport ease.

Retrofitted Standard Bike with Load Carrying Capability

Bicycle Panniers

Figure 3. Various ways of transporting materials using a bicycle.

We plan to install the the fuel cell in a pannier (Table 4) allowing it to be easily removed and used for other applications. The panniers may hold additional fuel cartridges or other cargo such as a water filtration system (Figure 4). This system could be readily adapted to fit within such a removable pannier. The system, as shown, filters 1.0 gallon/minute (3.8 liters / minutes) and requires less than 45 W of continous power. Using this system, each SiGNa 1.4 liter NaSi fuel cartridge could filter approximately 3,800 liters (1,000 gallons) of water for drinking.

Figure 4. Example of an Easily Portable Water Filtration System

Our preliminary bicycle specifications are shown in Table 2. These will be refined throughout the program. Initial conversations indicate that a cargo style type is likely an ideal entry point. At some point, a higher-cost folding bicycle may also be desired due to the ease of transport for emergency response situations. However, the cargo bicycle is believed to have a very high level of overall utility. The Phase I program will focus on the demonstration of the most technical elements of the solution, notably, the fuel cell – sodium silicide power system. A cargo-style bicycle with a focus on overall utility will be used to demonstrate the power system technology.

Table 2. H-Bike Specifications

Characteristic	Description or Value	Period of Demonstration
Type	Cargo	Phase I
Carrying Capacity	>200 lb (90 kg)	Phase I
Frame Type	Step-Through	
Electric Motor Power	>300 W	Phase I
Braking	Regenerative for battery recharging	
Electric Motor Generator	May be used for pedal based battery recharging or power output	
Throttle Type	Throttle only & pedal assist	
Max Speed with Electric Assist	20 mph (32 kph)	Phase I
Kickstand	Capable of holding bicycle weight + 250 lb, allows for rider to pedal while stationary for battery recharging	
Tires	Minimum of heavy duty puncture resistance. Foam core tires are possible.	
Battery	Lithium-Polymer, 10 Ah	Phase I
Cargo Racks	Quick release panniers and room for at least one passenger	

Power System Concept and Layout

Our preliminary power system specifications are shown in Table 3. These will be refined throughout the program.

The prototype will be designed to be a safe, ruggedized, user-friendly transportation alternative. The power module will be designed to be easily and rapidly removable by the user to facilitate use as a portable power base station. In addition, the power system will include a USB output for low power recharging applications (like cell phones).

Using the design inputs with the results of the previous fuel cell bike experiments, SiGNa will develop the preliminary designs for the intended prototype. These designs will be vetted with USAID and internal engineering staff. A Failure Modes Engineering Analysis and a Hazardous Operation analysis will be performed on the complete system to identify safety issues before the design is complete.

At the completion of Task 1, a design package will be presented to USAID.

Table 3. Fuel Cell Power System Specifications

Characteristic	Description or Value	Period of Demonstration
Fuel Cell Power	>200 W Continuous	Phase I
Hybrid Power System	Battery Recharge or Fuel Cell Only Modes	Phase I
Regenerative Input	Ability to receive and distribute power from electric motor	
Auxiliary Power Outputs	24 V, 12 V, USB*	*Phase I

Self-Start	Fuel cell has ability to start at full power without an external battery	Phase I
Output Display	Health monitoring of system and key usage characteristics	Phase I
Energy Storage	>400 Wh Per Cartridge	Phase I
Cartridge Connection	Easy connection	Phase I
Cartridge Storage	Room for at least four fuel cartridges in panniers	Phase I
Max Cartridge Weight	2.2 lb (1.0 kg)	Phase I
Water Type	Any available	Phase I
Filter	Cleanable Dust Filter	
Transport	Easily removable system capable of bike independent operation	Phase I

Task 2. Build Integrated System (No Work Performed)

The design produced in Task 1, will guide Task 2 – Build. SiGNa will perform most assembly work in house at SiGNa. However, components will be sourced from commercial vendors and fabrication shops in the Sacramento area. SiGNa will strive to source most of the parts as "commercial, off-the-shelf" whenever possible to decrease cost and lead time.

When all parts are in house and sorted, SiGNa mechanical engineers and mechanical technicians will assemble individual subsystems and ensure functionality. For instance, the auxiliary inputs may be verified without the entire system assembled. The subsystems will then be integrated together to complete the E-Bike.

Once built, initial safety testing will commence. First, a thorough check of the safety systems, such as over-temperature speed limiting controls, will be performed. Certain critical individual components such as pressure relief valves will also be tested.

Finally, the operational boundaries of the bike will be determined through systematic investigation. For example, the E-Bike battery will be depleted and charged to determine the total available energy as well as the maximum and minimum expected voltages from this component.

A major Stage 1 milestone will be met at the end of this task - the initial demonstration of the prototype E-Bike for testing.

Task 3. Test Integrated System (No Work Performed)

After safety verification and system boundary assessment, the bike system will be first tested for general street use by operating it as a commuter bike in. Davis, CA. Multiple users will operate the bike to get a range of inputs. Stage I testing will primarily consist of a range of tests using local individuals in order to minimize costs associated with traveling and to rapidly incorporate feedback and conduct the appropriate technical modifications. Some of the users that will be used to provide feedback on the system include:

- **Technical staff** will understand system function at a base level and be able to detect and report any performance that deviates from expectations. (Ex. If the E-Bike is able to provide 30% more power than expected this user will note this change)
- **Non-technical staff** appreciate the E-Bike as a product, and not a technical curiosity. These users will ride and present feedback to the engineers about comfort and other usability issues. A non-technical rider might notice that the bike is excellent at hauling groceries if the panniers were a specific dimension or that on a windy day performance seems to increase in one direction.
- **Dedicated cyclists** will notice the mechanical nature of the E-Bike more than the technical staff. Davis, CA is "Platinum" level bike city with more bicycles than cars. The dedicated cyclist users are well versed in all aspects of bicycle technology and ride performance. Break wear, and tire repair will be truly appreciated by this population.

The E-bike will be equipped with an electronic monitoring system to assist our technical assessment of the bike. Each user's ride will be tracked to understand the demand profile of the power module, the likely charging and discharging cycles as well as the more mundane issues like performance variation with temperature. Each parameter will be monitored, correlated, and analyzed throughout the study. This data set will allow SiGNa to ensure the E-Bike meets design metrics. In this way, SiGNa will understand both the capabilities of the unit as well as areas that may need improvement.

Task 4. Reporting and Administration (11% Complete)

This task accounts for program management and reporting to the USAID contracting office. Within each monthly report, we will summarize program activities as required. A final report will summarize all of Stage I program activities. This task also includes a kickoff meeting and any subsequent meetings needed to represent our work either in Davis, CA at the SiGNa Chemistry facility or at USAID in Washington, DC.

Table 4. Reporting Deliverables and Milestones

Reporting and Administration
Monthly Report 1
Monthly Report 2
Monthly Report 3
Monthly Report 4
Monthly Report 5
Monthly Report 6
Monthly Report 7
Monthly Report 8
Final Report
Milestones
Milestone 1. Design Review Package.
Milestone 2. First Assembly Completion.
Milestone 3. Delivery of Final Report.

The E-Bike: Practical, Scalable, Pollution-Free Mobile Transportation

Monthly Report 2

November 31, 2010

Awardee	SiGNa Chemistry Alternative Energy Division 720 Olive Drive, Suite C Davis, CA 95616 Grant# AID-OAA-G-10-00012
Primary Contact	Andrew P. Wallace Vice-President of Alternative Energy / Principal Investigator Phone: (530) 554-2217 Email: apwallace@signachem.com Website: www.signachem.com
Type of Business	Small, for-profit business
Other Funders	No other organizations are funding this work
Representative Signature	Andrew P. Wallace
Representative Title	Vice-President of Alternative Energy / Principal Investigator

The E-Bike: Practical, Scalable, Pollution-Free Mobile Transportation

Technical Objective (included for reference)

Award Type: Stage 1

In this program, SiGNa Chemistry is developing the E-Bike, an affordable fuel cell-powered bicycle that provides both a clean, efficient mode of transportation and a portable, general purpose power source. The fuel cell power system will incorporate SiGNa's unique clean energy storage solution, which operates at one-sixth the cost, weight and volume of existing battery technologies. The prototype bicycle will be rugged, lightweight, and have a base range of up to 100 miles, which is 300% farther than the range achieved by equivalently-sized high-performance batteries. The portable power module will be designed for easy removal from the bicycle so that it can also be used as a stand-alone power source for non-transportation functions, like powering pumps, lights, cell phones, etc. The only emissions from the E-Bike will be water vapor and air, which is not the case with scooters powered by internal combustion engines (one of the highest emitters of green-house gases and air pollutants).

The technology in this program will dramatically improve the lives of tens of millions of people in developing countries. The E-Bike and its power module will have three primary uses: (1) as a long-range, pollution-free, powered transportation alternative, (2) as a general purpose mobile power source, and (3) as a transportation and power platform in emergency or disaster relief efforts. A key differentiator for this system is its portable power module, which is designed to operate independently from the electric bicycle. This technology will provide millions of people with access to a stable, general purpose mobile power source that can operate, for example, computers, cell phones, refrigerators, or water pumps. *As more than 1.45 billion people worldwide do not have access to electricity (IEA 2009), the scaling potential for this portable power system to improve lives is staggering.* This system will also be a valuable tool in emergency or disaster situations, where the portable power module could be used to power emergency response systems, medical refrigerators, and telecommunications repeater stations.

Countless socio-economic boundaries can be bridged using this system when this technology is developed to a point that it is viable for scaled manufacturing.

Method of Approach (Included For Reference)

In the proposed Stage 1 program, SiGNa Chemistry will design, build, and test a fuel cell-powered bicycle prototype for use in developing nations and areas in need of disaster relief. The prototype bicycle and power module will be demonstrated during in-house evaluations and, potentially, in limited field trials.

Fuel Cell Technology

Fuel cells convert chemical energy (typically hydrogen) into electrical energy at significantly higher efficiencies (50%) than internal combustion engines (12-13%). The fuel cell device has no moving parts; instead, it functions like a battery with anodic and cathodic reactions (Figure 1). The only inputs are hydrogen and air and the only emissions are water, air and DC power. Because there are no moving parts, fuel cell systems typically operate for thousands of hours before maintenance is required.

Despite the advantages of fuel cell power, it has not been widely adopted, primarily because the storage of gaseous hydrogen is problematic. SiGNa Chemistry has overcome this challenge by developing a process where solid sodium silicide (NaSi) reacts with any water to instantaneously produce clean hydrogen gas. This unique NaSi material has fast reaction times, low by-product solubility, and is safe to handle in air. SiGNa's technology generates hydrogen as needed at <30 psi. More conventional hydrogen storage using compressed gas tanks would require a pressure of over 4,000 psi to store an equivalent amount of hydrogen.

a. Sodium Silicide (NaSi) Reacts with Water to Form Hydrogen

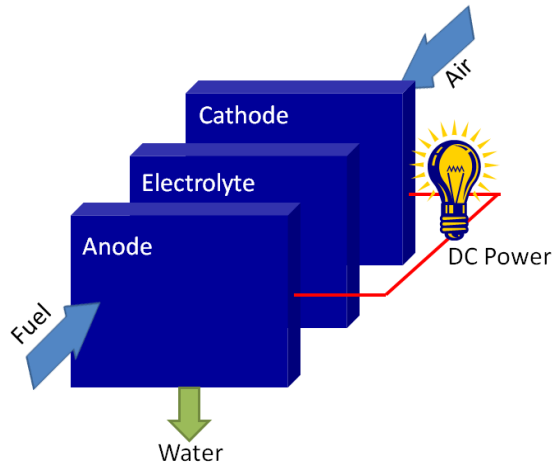

b. Hydrogen is Used as a Fuel for Zero Pollutant Portable Power

Figure 1. Hydrogen Fuel Cell Technology

E-Bike Concept

SiGNa will integrate the reliable power generator into a complete system (Figure 2a) that powers a bicycle and potentially other devices. The system's structure will center on a power manager, which communicates with multiple devices that store, produce, and consume power.

Energy, in the form of sodium silicide, will be stored in the fuel canister, where the power will also be generated. Water from a small (1 liter) reservoir is supplied to the canister. This system can use water of any quality including potable water, polluted water, sea water, or even urine. Hydrogen generated from the reaction between the water and sodium silicide is fed to the fuel cell via a hydrogen control module. The fuel cell then provides energy to the power manager. Once maximum riding distance is reached (i.e., when the sodium silicide is spent) the user is left with a non-toxic by-product (sodium silicate) contained within the disposable or reusable canister. This by-product can be used as an industrial feedstock in multiple industries, such as concrete production, glass, toothpaste, etc. Sodium silicate is also classified as a non-hazardous solid waste under RCRA and can be readily disposed of in municipal waste.

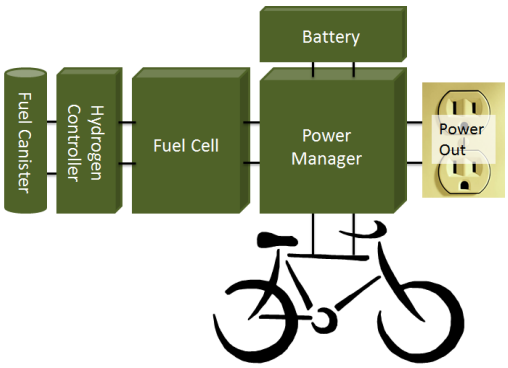

a. Proposed System Architecture

b. SiGNa's Experimental, Generation 0 Fuel Cell-Powered Bicycle.

Figure 2. Sodium Silicide and its use in a transportation application.

The E-Bike's power module will extend the range of electric bicycles from 20 to 100 miles at approximately the same weight. The range can be extended by a further 100 miles (160 km) for each additional sodium silicide cartridge (0.75 kg or 1.65 lb) carried on board with moderate pedaling. Because sodium silicide is solid and non-

flammable, these cartridges are inherently safer than other storage alternatives. For instance, a comparable compressed hydrogen system stores flammable gas at 4,000 psi (276 bar) or greater.

SiGNa has fabricated a Generation 0 experimental bicycle to test various use modes (Figure 2b). This experimental system is more of a mobile chemistry laboratory than a prototype; however, this bike is a launching point to develop a fully-refined system and prototype for this USAID program.

Program Plan

SiGNa has completed the second month in a nine month program for the development of a prototype fuel cell electric bicycle. The program consists of three primary tasks: Design, Build, and Test. Major deliverables/milestones are associated with those tasks as follows: Design Review Package, Fabrication of First System, and a Final Report. The Final Report will document all elements of the program including final testing and verification.

Name	Duration	Start	Finish	Pre...
Stage I	195 days	**10/1/10 8:00 AM**	**6/30/11 5:00 PM**	
Design Integrated System	66 days	10/1/10 8:00 AM	12/31/10 5:00 PM	
Build Integrated System	64 days	1/3/11 8:00 AM	3/31/11 5:00 PM	2
Test Integrated System	65 days	4/1/11 8:00 AM	6/30/11 5:00 PM	3
Reporting and Administration	195 days	10/1/10 8:00 AM	6/30/11 5:00 PM	
Reporting and Administration	195 days	**10/1/10 8:00 AM**	**6/30/11 5:00 PM**	
Monthly Report 1	21 days	10/1/10 8:00 AM	10/29/10 5:00 PM	
Monthly Report 2	22 days	11/1/10 8:00 AM	11/30/10 5:00 PM	7
Monthly Report 3	23 days	12/1/10 8:00 AM	12/31/10 5:00 PM	8
Monthly Report 4	21 days	1/3/11 8:00 AM	1/31/11 5:00 PM	9
Monthly Report 5	20 days	2/1/11 8:00 AM	2/28/11 5:00 PM	10
Monthly Report 6	23 days	3/1/11 8:00 AM	3/31/11 5:00 PM	11
Monthly Report 7	21 days	4/1/11 8:00 AM	4/29/11 5:00 PM	12
Monthly Report 8	22 days	5/2/11 8:00 AM	5/31/11 5:00 PM	13
Final Report	22 days	6/1/11 8:00 AM	6/30/11 5:00 PM	14
Milestones	195 days	**10/1/10 8:00 AM**	**6/30/11 5:00 PM**	**1SS**
Milestone 1. Design Review Package.	66 days	10/1/10 8:00 AM	12/31/10 5:00 PM	
Milestone 2. First Assembly Completion.	64 days	1/3/11 8:00 AM	3/31/11 5:00 PM	17
Milestone 3. Delivery of Final Report.	65 days	4/1/11 8:00 AM	6/30/11 5:00 PM	18

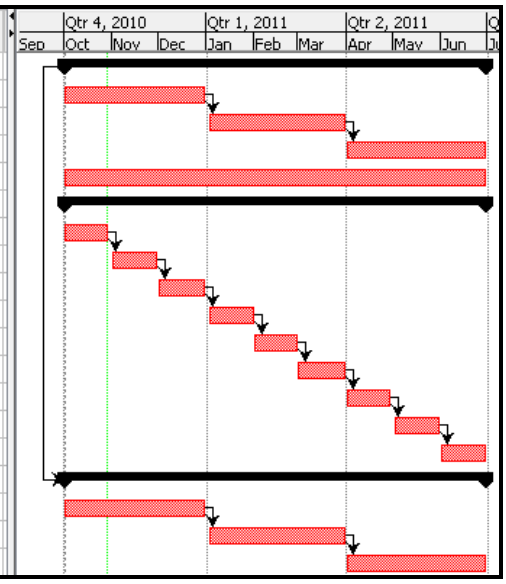

Work Plan (Overview)

To build the integrated E-Bike system, SiGNa will partner with its existing fuel cell supplier and an electric-drive bicycle manufacturer. SiGNa will integrate the individual parts to produce a prototype that can readily be demonstrated and tested by non-technical personnel.

Task 1. Design Integrated System – Systems specifications, concept development, and design

Task 2. Build Integrated System – Component procurement, assembly, and initial debugging

Task 3. Test Integrated System – System testing, system improvements, and final verification

Task 4. Reporting and Administration – Program management and reporting.

WORK PLAN (DETAILED)

Task 1. Design Integrated System (66% Complete)

The specifications previously developed are shown for easy reference: electric bicycle (Table 1) and the fuel cell power system (Table 2). The bulk of the work in this task in this quarter has been developing the appropriate test electronics. More specifically, a power converter circuit is being fabricated which has controllable output powers and voltages to properly control the battery and fuel cell hybrid system.

Bicycle Type and Design:

A cargo bicycle will likely be used for the Phase I trials. In order to reduce the costs associated with Phase I development, it is anticipated that an existing tandem electric bicycle will be modified to be a cargo bicycle. An existing bicycle is as shown in Figure 3. In addition, discussion with an electric bicycle manufacturer indicated that the "quick release" panniers tend to be expensive and prone to breakage. A low cost two-bag pannier system which hangs onto both sides of the bike provides significant flexibility in packaging. In addition, it is very low cost, and rapidly removable.

Figure 3. Existing Tandem Electric Bicycle to be Modified to Have a Cargo Platform

Table 1. H-Bike Specifications

Characteristic	Description or Value	Period of Demonstration
Type	Cargo	Phase I
Carrying Capacity	>200 lb (90 kg)	Phase I
Frame Type	Step-Through	
Electric Motor Power	>300 W	Phase I
Braking	Regenerative for battery recharging	
Electric Motor Generator	May be used for pedal based battery recharging or power output	
Throttle Type	Throttle only & pedal assist	
Max Speed with Electric Assist	20 mph (32 kph)	Phase I
Kickstand	Capable of holding bicycle weight + 250 lb, allows for rider to pedal while stationary for battery recharging	
Tires	Minimum of heavy duty puncture resistance. Foam core tires are possible.	
Battery	Lithium-Polymer, 10 Ah	Phase I
Cargo Racks	Quick release panniers and room for at least one passenger	

Power System Concept and Layout

Our preliminary power system specifications are shown in Table 2. These will be refined throughout the program. No changes are made from the previous month. However, the power electronics module is currently being prototyped. The 24 and 12V output will likely not be separate connectors from the main output. The possibility of a user configurable output voltage is being evaluated to allow for rapid use of the system for a wide variety of applications while minimizing cost. This is further complicated as numerous values are required such as: 12V, 24V, 36V, and 48V. In addition, the actual control voltage is more subtle as 54V is actually required to recharge a 48V battery. The complete adjustability of this output is likely not feasible within the Phase I timeframe, but this is being initially prototyped to understand the complete scope of work required and to prepare for the Phase II proposal.

Table 2. Fuel Cell Power System Specifications

Characteristic	Description or Value	Period of Demonstration
Fuel Cell Power	>200 W Continuous	Phase I
Hybrid Power System	Battery Recharge or Fuel Cell Only Modes	Phase I
Regenerative Input	Ability to receive and distribute power from electric motor	
Auxiliary Power Outputs	24 V, 12 V, USB*	*Phase I
Self-Start	Fuel cell has ability to start at full power without an external battery	Phase I
Output Display	Health monitoring of system and key usage characteristics	Phase I
Energy Storage	>400 Wh Per Cartridge	Phase I

Cartridge Connection	Easy connection	Phase I
Cartridge Storage	Room for at least four fuel cartridges in panniers	Phase I
Max Cartridge Weight	2.2 lb (1.0 kg)	Phase I
Water Type	Any available	Phase I
Filter	Cleanable Dust Filter	
Transport	Easily removable system capable of bike independent operation	Phase I

Application / Deployment Development

A meeting with USAID was held to assist in the identification of the initial market to be addressed. Continued work is required in this area throughout the Phase I program.

Task 2. Build Integrated System (No Work Performed)

The design produced in Task 1, will guide Task 2 – Build. SiGNa will perform most assembly work in house at SiGNa. However, components will be sourced from commercial vendors and fabrication shops in the Sacramento area. SiGNa will strive to source most of the parts as "commercial, off-the-shelf" whenever possible to decrease cost and lead time.

When all parts are in house and sorted, SiGNa mechanical engineers and mechanical technicians will assemble individual subsystems and ensure functionality. For instance, the auxiliary inputs may be verified without the entire system assembled. The subsystems will then be integrated together to complete the E-Bike.

Once built, initial safety testing will commence. First, a thorough check of the safety systems, such as over-temperature speed limiting controls, will be performed. Certain critical individual components such as pressure relief valves will also be tested.

Finally, the operational boundaries of the bike will be determined through systematic investigation. For example, the E-Bike battery will be depleted and charged to determine the total available energy as well as the maximum and minimum expected voltages from this component.

A major Stage 1 milestone will be met at the end of this task - the initial demonstration of the prototype E-Bike for testing.

Task 3. Test Integrated System (No Work Performed)

After safety verification and system boundary assessment, the bike system will be first tested for general street use by operating it as a commuter bike in. Davis, CA. Multiple users will operate the bike to get a range of inputs. Stage I testing will primarily consist of a range of tests using local individuals in order to minimize costs associated with traveling and to rapidly incorporate feedback and conduct the appropriate technical modifications. Some of the users that will be used to provide feedback on the system include:

- **Technical staff** will understand system function at a base level and be able to detect and report any performance that deviates from expectations. (Ex. If the E-Bike is able to provide 30% more power than expected this user will note this change)
- **Non-technical staff** appreciate the E-Bike as a product, and not a technical curiosity. These users will ride and present feedback to the engineers about comfort and other usability issues. A non-technical rider might notice that the bike is excellent at hauling groceries if the panniers were a specific dimension or that on a windy day performance seems to increase in one direction.
- **Dedicated cyclists** will notice the mechanical nature of the E-Bike more than the technical staff. Davis, CA is "Platinum" level bike city with more bicycles than cars. The dedicated cyclist users are well versed in all aspects of bicycle technology and ride performance. Break wear, and tire repair will be truly appreciated by this population.

The E-bike will be equipped with an electronic monitoring system to assist our technical assessment of the bike. Each user's ride will be tracked to understand the demand profile of the power module, the likely charging and discharging cycles as well as the more mundane issues like performance variation with temperature. Each parameter will be monitored, correlated, and analyzed throughout the study. This data set will allow SiGNa to ensure the E-Bike meets design metrics. In this way, SiGNa will understand both the capabilities of the unit as well as areas that may need improvement.

Task 4. Reporting and Administration (22% Complete)

This task accounts for program management and reporting to the USAID contracting office. Within each monthly report, we will summarize program activities as required. A final report will summarize all of Stage I program activities. This task also includes a kickoff meeting and any subsequent meetings needed to represent our work either in Davis, CA at the SiGNa Chemistry facility or at USAID in Washington, DC.

Table 3. Reporting Deliverables and Milestones

Reporting and Administration
Monthly Report 1
Monthly Report 2
Monthly Report 3
Monthly Report 4
Monthly Report 5
Monthly Report 6
Monthly Report 7
Monthly Report 8
Final Report
Milestones
Milestone 1. Design Review Package.
Milestone 2. First Assembly Completion.
Milestone 3. Delivery of Final Report.

The E-Bike: Practical, Scalable, Pollution-Free Mobile Transportation

Monthly Report 3

December 31, 2010

Awardee	SiGNa Chemistry Alternative Energy Division 720 Olive Drive, Suite C Davis, CA 95616 Grant# AID-OAA-G-10-00012
Primary Contact	Andrew P. Wallace Vice-President of Alternative Energy / Principal Investigator Phone: (530) 554-2217 Email: apwallace@signachem.com Website: www.signachem.com
Type of Business	Small, for-profit business
Other Funders	No other organizations are funding this work
Representative Signature	Andrew P. Wallace
Representative Title	Vice-President of Alternative Energy / Principal Investigator

The E-Bike: Practical, Scalable, Pollution-Free Mobile Transportation

Technical Objective (included for reference)

Award Type: Stage 1

In this program, SiGNa Chemistry is developing the E-Bike, an affordable fuel cell-powered bicycle that provides both a clean, efficient mode of transportation and a portable, general purpose power source. The fuel cell power system will incorporate SiGNa's unique clean energy storage solution, which operates at one-sixth the cost, weight and volume of existing battery technologies. The prototype bicycle will be rugged, lightweight, and have a base range of up to 100 miles, which is 300% farther than the range achieved by equivalently-sized high-performance batteries. The portable power module will be designed for easy removal from the bicycle so that it can also be used as a stand-alone power source for non-transportation functions, like powering pumps, lights, cell phones, etc. The only emissions from the E-Bike will be water vapor and air, which is not the case with scooters powered by internal combustion engines (one of the highest emitters of green-house gases and air pollutants).

The technology in this program will dramatically improve the lives of tens of millions of people in developing countries. The E-Bike and its power module will have three primary uses: (1) as a long-range, pollution-free, powered transportation alternative, (2) as a general purpose mobile power source, and (3) as a transportation and power platform in emergency or disaster relief efforts. A key differentiator for this system is its portable power module, which is designed to operate independently from the electric bicycle. This technology will provide millions of people with access to a stable, general purpose mobile power source that can operate, for example, computers, cell phones, refrigerators, or water pumps. *As more than 1.45 billion people worldwide do not have access to electricity (IEA 2009), the scaling potential for this portable power system to improve lives is staggering.* This system will also be a valuable tool in emergency or disaster situations, where the portable power module could be used to power emergency response systems, medical refrigerators, and telecommunications repeater stations.

Countless socio-economic boundaries can be bridged using this system when this technology is developed to a point that it is viable for scaled manufacturing.

Method of Approach (Included For Reference)

In the proposed Stage 1 program, SiGNa Chemistry will design, build, and test a fuel cell-powered bicycle prototype for use in developing nations and areas in need of disaster relief. The prototype bicycle and power module will be demonstrated during in-house evaluations and, potentially, in limited field trials.

Fuel Cell Technology

Fuel cells convert chemical energy (typically hydrogen) into electrical energy at significantly higher efficiencies (50%) than internal combustion engines (12-13%). The fuel cell device has no moving parts; instead, it functions like a battery with anodic and cathodic reactions (Figure 1). The only inputs are hydrogen and air and the only emissions are water, air and DC power. Because there are no moving parts, fuel cell systems typically operate for thousands of hours before maintenance is required.

Despite the advantages of fuel cell power, it has not been widely adopted, primarily because the storage of gaseous hydrogen is problematic. SiGNa Chemistry has overcome this challenge by developing a process where solid sodium silicide (NaSi) reacts with any water to instantaneously produce clean hydrogen gas. This unique NaSi material has fast reaction times, low by-product solubility, and is safe to handle in air. SiGNa's technology generates hydrogen as needed at <30 psi. More conventional hydrogen storage using compressed gas tanks would require a pressure of over 4,000 psi to store an equivalent amount of hydrogen.

a. Sodium Silicide (NaSi) Reacts with Water to Form Hydrogen

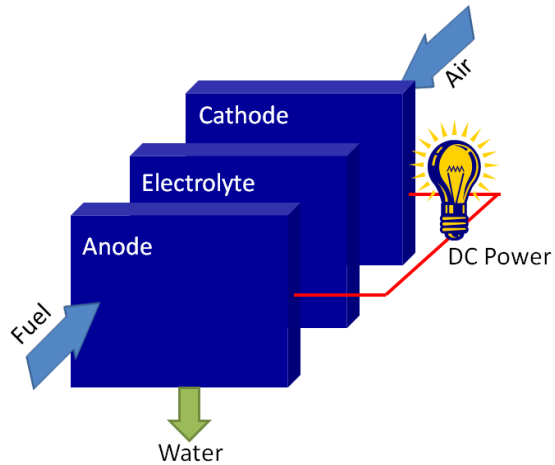

b. Hydrogen is Used as a Fuel for Zero Pollutant Portable Power

Figure 1. Hydrogen Fuel Cell Technology

E-Bike Concept

SiGNa will integrate the reliable power generator into a complete system (Figure 2a) that powers a bicycle and potentially other devices. The system's structure will center on a power manager, which communicates with multiple devices that store, produce, and consume power.

Energy, in the form of sodium silicide, will be stored in the fuel canister, where the power will also be generated. Water from a small (1 liter) reservoir is supplied to the canister. This system can use water of any quality including potable water, polluted water, sea water, or even urine. Hydrogen generated from the reaction between the water and sodium silicide is fed to the fuel cell via a hydrogen control module. The fuel cell then provides energy to the power manager. Once maximum riding distance is reached (i.e., when the sodium silicide is spent) the user is left with a non-toxic by-product (sodium silicate) contained within the disposable or reusable canister. This by-product can be used as an industrial feedstock in multiple industries, such as concrete production, glass, toothpaste, etc. Sodium silicate is also classified as a non-hazardous solid waste under RCRA and can be readily disposed of in municipal waste.

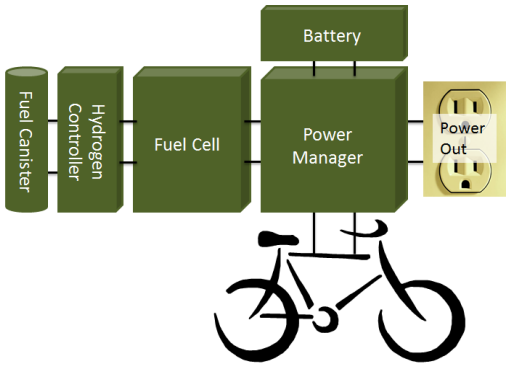

a. Proposed System Architecture

b. SiGNa's Experimental, Generation 0 Fuel Cell-Powered Bicycle.

Figure 2. Sodium Silicide and its use in a transportation application.

The E-Bike's power module will extend the range of electric bicycles from 20 to 100 miles at approximately the same weight. The range can be extended by a further 100 miles (160 km) for each additional sodium silicide cartridge (0.75 kg or 1.65 lb) carried on board with moderate pedaling. Because sodium silicide is solid and non-

flammable, these cartridges are inherently safer than other storage alternatives. For instance, a comparable compressed hydrogen system stores flammable gas at 4,000 psi (276 bar) or greater.

SiGNa has fabricated a Generation 0 experimental bicycle to test various use modes (Figure 2b). This experimental system is more of a mobile chemistry laboratory than a prototype; however, this bike is a launching point to develop a fully-refined system and prototype for this USAID program.

Program Plan

SiGNa has completed the second month in a nine month program for the development of a prototype fuel cell electric bicycle. The program consists of three primary tasks: Design, Build, and Test. Major deliverables/milestones are associated with those tasks as follows: Design Review Package, Fabrication of First System, and a Final Report. The Final Report will document all elements of the program including final testing and verification.

Name	Duration	Start	Finish	Pre...
Stage I	195 days	**10/1/10 8:00 AM**	**6/30/11 5:00 PM**	
Design Integrated System	66 days	10/1/10 8:00 AM	12/31/10 5:00 PM	
Build Integrated System	64 days	1/3/11 8:00 AM	3/31/11 5:00 PM	2
Test Integrated System	65 days	4/1/11 8:00 AM	6/30/11 5:00 PM	3
Reporting and Administration	195 days	10/1/10 8:00 AM	6/30/11 5:00 PM	
Reporting and Administration	195 days	**10/1/10 8:00 AM**	**6/30/11 5:00 PM**	
Monthly Report 1	21 days	10/1/10 8:00 AM	10/29/10 5:00 PM	
Monthly Report 2	22 days	11/1/10 8:00 AM	11/30/10 5:00 PM	7
Monthly Report 3	23 days	12/1/10 8:00 AM	12/31/10 5:00 PM	8
Monthly Report 4	21 days	1/3/11 8:00 AM	1/31/11 5:00 PM	9
Monthly Report 5	20 days	2/1/11 8:00 AM	2/28/11 5:00 PM	10
Monthly Report 6	23 days	3/1/11 8:00 AM	3/31/11 5:00 PM	11
Monthly Report 7	21 days	4/1/11 8:00 AM	4/29/11 5:00 PM	12
Monthly Report 8	22 days	5/2/11 8:00 AM	5/31/11 5:00 PM	13
Final Report	22 days	6/1/11 8:00 AM	6/30/11 5:00 PM	14
Milestones	195 days	**10/1/10 8:00 AM**	**6/30/11 5:00 PM**	**1SS**
Milestone 1. Design Review Package.	66 days	10/1/10 8:00 AM	12/31/10 5:00 PM	
Milestone 2. First Assembly Completion.	64 days	1/3/11 8:00 AM	3/31/11 5:00 PM	17
Milestone 3. Delivery of Final Report.	65 days	4/1/11 8:00 AM	6/30/11 5:00 PM	18

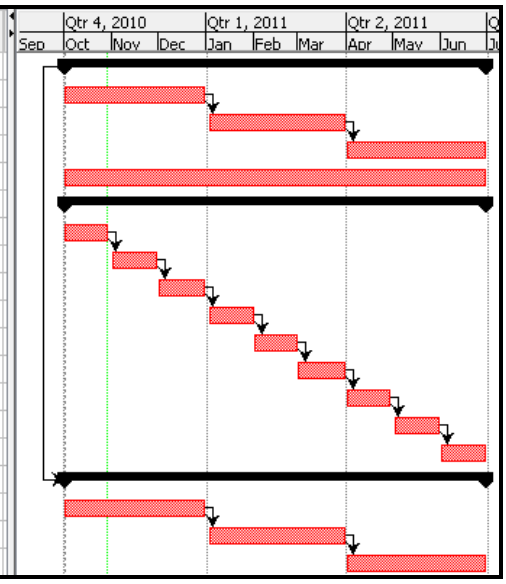

Work Plan (Overview)

To build the integrated E-Bike system, SiGNa will partner with its existing fuel cell supplier and an electric-drive bicycle manufacturer. SiGNa will integrate the individual parts to produce a prototype that can readily be demonstrated and tested by non-technical personnel.

Task 1. Design Integrated System – Systems specifications, concept development, and design

Task 2. Build Integrated System – Component procurement, assembly, and initial debugging

Task 3. Test Integrated System – System testing, system improvements, and final verification

Task 4. Reporting and Administration – Program management and reporting.

WORK PLAN (DETAILED)

Task 1. Design Integrated System (100% Complete)

The specifications previously developed are shown for easy reference: electric bicycle (Table 1) and the fuel cell power system (Table 2). This quarter we have developed the appropriate bicycle electronics. More specifically, we fabricated a power converter circuit which has controllable output powers and voltages to properly control the battery and fuel cell hybrid system.

Bicycle Type and Design:

A cargo bicycle will likely be used for the Phase I trials. In order to reduce the costs associated with Phase I development, it is anticipated that an existing tandem electric bicycle will be modified to be a cargo bicycle. An existing bicycle is as shown in Figure 3. In addition, discussion with an electric bicycle manufacturer indicated that the "quick release" panniers tend to be expensive and prone to breakage. A low cost two-bag pannier system (Figure 4) which hangs onto both sides of the bike provides significant flexibility in packaging. The two-bag pannier system can readily be modified to include electrical connectors and cabling. In addition, it is very low cost and rapidly removable.

Figure 3. Existing Tandem Electric Bicycle to be Modified to Have a Cargo Platform

The tandem bike pictured above will be modified to accommodate cargo capacity. The front position (or "captain" position) will be unchanged while the rear (or "stoker") position will be replaced with cargo space through a modification of the stoker seat post and handlebars.

A pannier system in the rear of the bike will house the system (Figure 4). The battery will reside in one compartment while the fuel cell and fuel canisters will be in the other. Because the largest system masses will be placed on either side of the center of gravity, the bike should remain more stable.

Figure 4 - Image of Pannier housing of Fuel Cell System

Figure 5 shows the process and instrumentation diagram for the system. Some of the valves and sensors are used primarily for these early systems to facilitate testing and development. Every effort will be used to use low cost components consistent with the application needs.

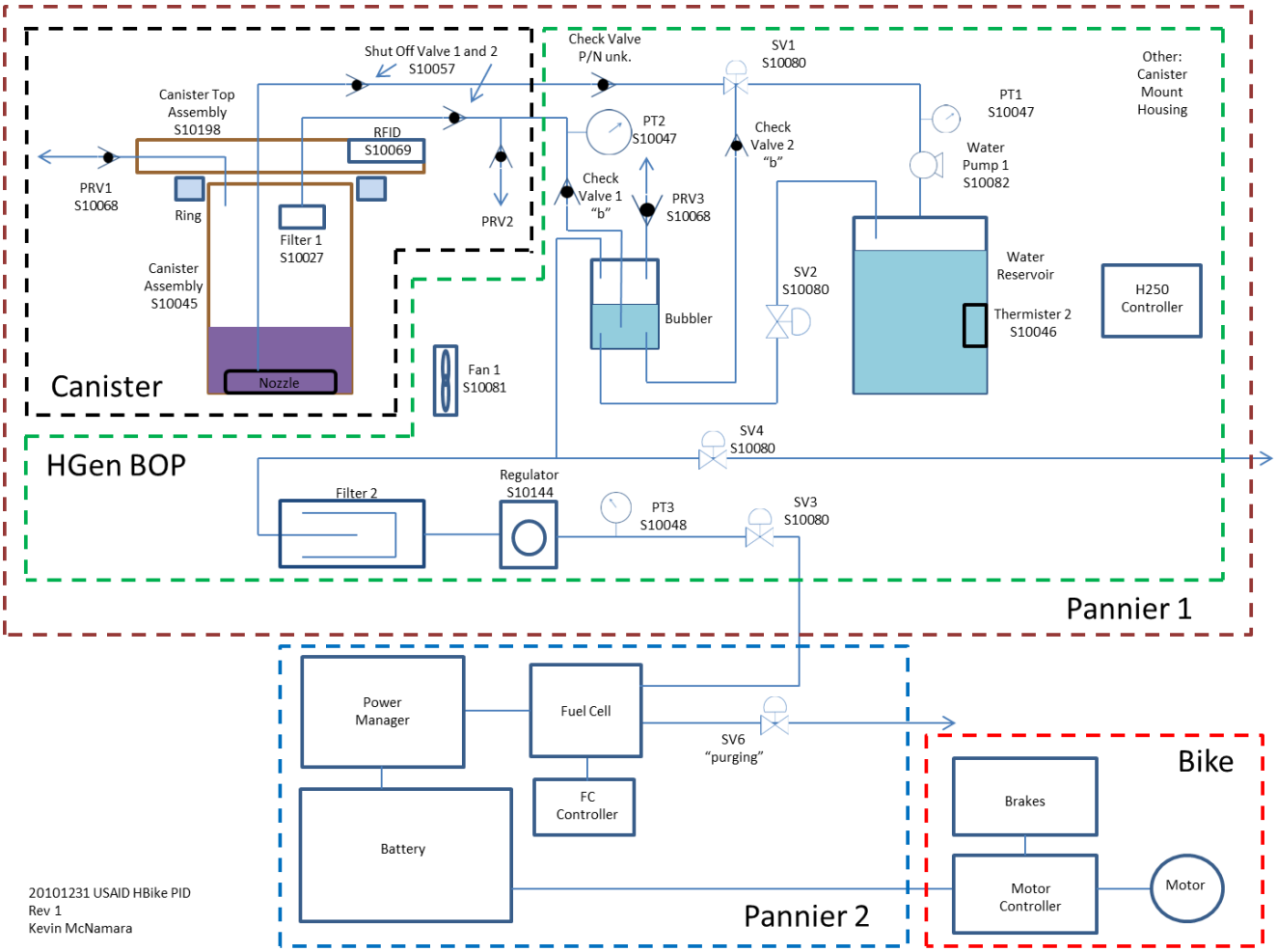

Figure 5 - Process and Instrumentation Diagram of H-Bike System

As shown above, the system will be divided into two parts, The hydrogen generation balance of plant (HGen BOP) and Canister will be housed on one Pannier 1 while the power manager, battery and fuel cell are housed in Pannier 2. Connecting the two sides will be power cables and a hydrogen line. In future generations the HGen Controller may be integrated into the fuel cell controller, thereby eliminating components and increasing the number of inter-pannier connections.

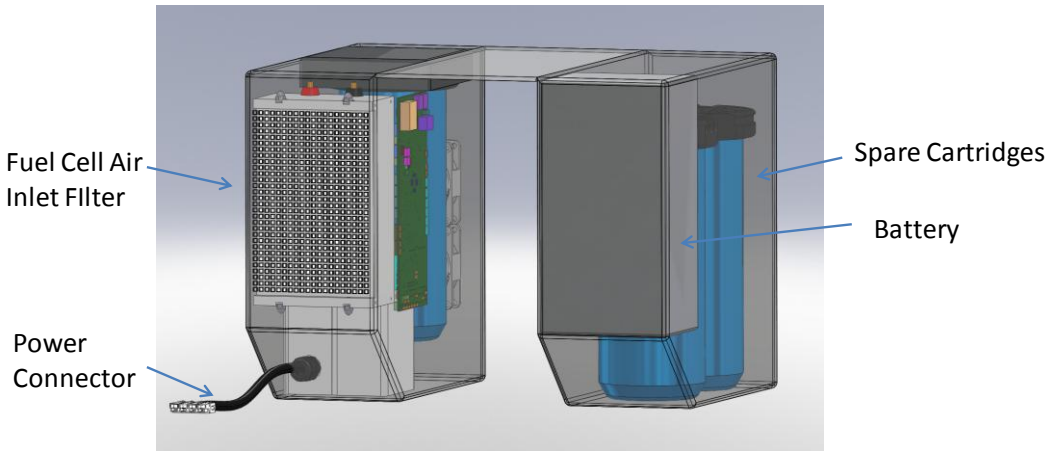

Figure 6 – Schematic of Implemented Hybrid Fuel Cell System

Table 1. H-Bike Specifications

Characteristic	Description or Value	Period of Demonstration
Type	Cargo	Phase I
Carrying Capacity	>200 lb (90 kg)	Phase I
Frame Type	Step-Through	
Electric Motor Power	>300 W	Phase I
Braking	Regenerative for battery recharging	
Electric Motor Generator	May be used for pedal based battery recharging or power output	
Throttle Type	Throttle only & pedal assist	
Max Speed with Electric Assist	20 mph (32 kph)	Phase I
Kickstand	Capable of holding bicycle weight + 250 lb, allows for rider to pedal while stationary for battery recharging	
Tires	Minimum of heavy duty puncture resistance. Foam core tires are possible.	
Battery	Lithium-Polymer, 10 Ah	Phase I
Cargo Racks	Quick release panniers and room for at least one passenger	

Power System Concept and Layout

Our current power system specifications are shown in Table 2. These will be refined throughout the program. No changes are made from the previous month. The power electronics module has now been demonstrated and tested. This circuit board will be updated as part of the final delivery system.

There are a number of AC and DC voltages used in the world. Instead of accommodating them individually with independent voltage regulation, the E-Bike will be configurable to a variety of voltages 12 VDC, 24V, 36 VDC and 48 VDC. Thus, if the user requires a 24 VDC a selector will be used to obtain this potential while a digital indicator will display the output value. A universal DC connector will be used for this output.

The E-Bike will have a separate output for 5V applications using a USB connector for applications like cell phone recharging. The breadth of ouput potential has direct consequences on the larger system. For instance, 54 V is required to recharge a 48 V battery. The complete adjustability of this output is likely not feasible within the Phase I timeframe, but this is being initially prototyped to understand the complete scope of work required and to prepare for the Phase II proposal. A limited range of voltages (minimum of 5V, 36V, and 110VAC) will be available to the user at the completion of Phase I.

Table 2. Fuel Cell Power System Specifications

Characteristic	Description or Value	Period of Demonstration
Fuel Cell Power	>200 W Continuous	Phase I
Hybrid Power System	Battery Recharge or Fuel Cell Only Modes	Phase I
Regenerative Input	Ability to receive and distribute power from electric motor	
Auxiliary Power Outputs	24 V, 12 V, USB*	*Phase I
Self-Start	Fuel cell has ability to start at full power without an external battery	Phase I
Output Display	Health monitoring of system and key usage characteristics	Phase I
Energy Storage	>400 Wh Per Cartridge	Phase I
Cartridge Connection	Easy connection	Phase I
Cartridge Storage	Room for at least four fuel cartridges in panniers	Phase I
Max Cartridge Weight	2.2 lb (1.0 kg)	Phase I
Water Type	Any available	Phase I
Filter	Cleanable Dust Filter	
Transport	Easily removable system capable of bike independent operation	Phase I

Application / Deployment Development

A meeting with USAID was held to assist in the identification of the initial market to be addressed. Continued work is required in this area throughout the Phase I program.

Task 2. Build Integrated System (Started - 0% Complete)

The design produced in Task 1, guides Task 2 – Build. SiGNa will perform most assembly work in house at SiGNa. However, components will be sourced from commercial vendors and fabrication shops in the Sacramento area. SiGNa will strive to source most of the parts as “commercial, off-the-shelf” whenever possible to decrease cost and lead time.

As part of the design effort, SiGNa Chemistry has begun sourcing components for the build. The panniers shown above (Figure 4) will be used in the prototype E-Bike.

When all parts are in house and sorted, SiGNa mechanical engineers and mechanical technicians will assemble individual subsystems and ensure functionality. For instance, the auxiliary inputs may be verified without the entire system assembled. The subsystems will then be integrated together to complete the E-Bike.

Once built, initial safety testing will commence. First, a thorough check of the safety systems, such as over-temperature speed limiting controls, will be performed. Certain critical individual components such as pressure relief valves will also be tested.

Finally, the operational boundaries of the bike will be determined through systematic investigation. For example, the E-Bike battery will be depleted and charged to determine the total available energy as well as the maximum and minimum expected voltages from this component.

A major Stage 1 milestone will be met at the end of this task - the initial demonstration of the prototype E-Bike.

Task 3. Test Integrated System (No Work Performed)

After safety verification and system boundary assessment, the bike system will be first tested for general street use by operating it as a commuter bike in. Davis, CA. Multiple users will operate the bike to get a range of inputs. Stage I testing will primarily consist of a range of tests using local individuals in order to minimize costs associated with traveling and to rapidly incorporate feedback and conduct the appropriate technical modifications. Some of the users that will be used to provide feedback on the system include:

- **Technical staff** will understand system function at a base level and be able to detect and report any performance that deviates from expectations. (Ex. If the E-Bike is able to provide 30% more power than expected this user will note this change)
- **Non-technical staff** appreciate the E-Bike as a product, and not a technical curiosity. These users will ride and present feedback to the engineers about comfort and other usability issues. A non-technical rider might notice that the bike is excellent at hauling groceries if the panniers were a specific dimension or that on a windy day performance seems to increase in one direction.
- **Dedicated cyclists** will notice the mechanical nature of the E-Bike more than the technical staff. Davis, CA is "Platinum" level bike city with more bicycles than cars. The dedicated cyclist users are well versed in all aspects of bicycle technology and ride performance. Break wear and tire repair will be truly appreciated by this population.

The E-bike will be equipped with an electronic monitoring system to assist our technical assessment of the bike. Each user's ride will be tracked to understand the demand profile of the power module, the likely charging and discharging cycles as well as the more mundane issues like performance variation with temperature. Each parameter will be monitored, correlated, and analyzed throughout the study. This data set will allow SiGNa to ensure the E-Bike meets design metrics. In this way, SiGNa will understand both the capabilities of the unit as well as areas that may need improvement.

Task 4. Reporting and Administration (33% Complete)

This task accounts for program management and reporting to the USAID contracting office. Within each monthly report, we will summarize program activities as required. A final report will summarize all of Stage I program activities. This task also includes a kickoff meeting and any subsequent meetings needed to represent our work either in Davis, CA at the SiGNa Chemistry facility or at USAID in Washington, DC.

Table 3. Reporting Deliverables and Milestones

⊟ **Reporting and Administration**
Monthly Report 1
Monthly Report 2
Monthly Report 3
Monthly Report 4
Monthly Report 5
Monthly Report 6
Monthly Report 7
Monthly Report 8
Final Report
⊟ **Milestones**
Milestone 1. Design Review Package.
Milestone 2. First Assembly Completion.
Milestone 3. Delivery of Final Report.

The E-Bike: Practical, Scalable, Pollution-Free Mobile Transportation

Monthly Report 4

January 31, 2011

Awardee	SiGNa Chemistry Alternative Energy Division 720 Olive Drive, Suite C Davis, CA 95616 Grant# AID-OAA-G-10-00012
Primary Contact	Andrew P. Wallace Vice-President of Alternative Energy / Principal Investigator Phone: (530) 554-2217 Email: apwallace@signachem.com Website: www.signachem.com
Type of Business	Small, for-profit business
Other Funders	No other organizations are funding this work
Representative Signature	Andrew P. Wallace
Representative Title	Vice-President of Alternative Energy / Principal Investigator

The E-Bike: Practical, Scalable, Pollution-Free Mobile Transportation

Summary of Current Month Progress

In the four month of this program, there has been a continued focus on the operation of the existing laboratory test system. The test bike has been used almost daily both in and outside the laboratory to test the software, breadboard electronics, and the various components. In month 4, 131 miles of bike testing was performed to verify the various firmware testing scenarios. In addition, the hydrogen generation system was tested at 50 ºC in a new environmental simulation chamber. The system performed well with no adverse effects detected. Furthermore, a meeting was held at USAID office to review the program to date. Follow-up meetings are expected to provide additional clarity on the initial application to be proposed for Phase.

Technical Objective (included for reference)

Award Type: Stage 1

In this program, SiGNa Chemistry is developing the E-Bike, an affordable fuel cell-powered bicycle that provides both a clean, efficient mode of transportation and a portable, general purpose power source. The fuel cell power system will incorporate SiGNa's unique clean energy storage solution, which operates at one-sixth the cost, weight and volume of existing battery technologies. The prototype bicycle will be rugged, lightweight, and have a base range of up to 100 miles, which is 300% farther than the range achieved by equivalently-sized high-performance batteries. The portable power module will be designed for easy removal from the bicycle so that it can also be used as a stand-alone power source for non-transportation functions, like powering pumps, lights, cell phones, etc. The only emissions from the E-Bike will be water vapor and air, which is not the case with scooters powered by internal combustion engines (one of the highest emitters of green-house gases and air pollutants).

The technology in this program will dramatically improve the lives of tens of millions of people in developing countries. The E-Bike and its power module will have three primary uses: (1) as a long-range, pollution-free, powered transportation alternative, (2) as a general purpose mobile power source, and (3) as a transportation and power platform in emergency or disaster relief efforts. A key differentiator for this system is its portable power module, which is designed to operate independently from the electric bicycle. This technology will provide millions of people with access to a stable, general purpose mobile power source that can operate, for example, computers, cell phones, refrigerators, or water pumps. *As more than 1.45 billion people worldwide do not have access to electricity (IEA 2009), the scaling potential for this portable power system to improve lives is staggering.* This system will also be a valuable tool in emergency or disaster situations, where the portable power module could be used to power emergency response systems, medical refrigerators, and telecommunications repeater stations.

Countless socio-economic boundaries can be bridged using this system when this technology is developed to a point that it is viable for scaled manufacturing.

Method of Approach (Included For Reference)

In the proposed Stage 1 program, SiGNa Chemistry will design, build, and test a fuel cell-powered bicycle prototype for use in developing nations and areas in need of disaster relief. The prototype bicycle and power module will be demonstrated during in-house evaluations and, potentially, in limited field trials.

Fuel Cell Technology

Fuel cells convert chemical energy (typically hydrogen) into electrical energy at significantly higher efficiencies (50%) than internal combustion engines (12-13%). The fuel cell device has no moving parts; instead, it functions like a battery with anodic and cathodic reactions (Figure 1). The only inputs are hydrogen and air and the only emissions are water, air and DC power. Because there are no moving parts, fuel cell systems typically operate for thousands of hours before maintenance is required.

Despite the advantages of fuel cell power, it has not been widely adopted, primarily because the storage of gaseous hydrogen is problematic. SiGNa Chemistry has overcome this challenge by developing a process where solid sodium silicide (NaSi) reacts with any water to instantaneously produce clean hydrogen gas. This unique NaSi material has fast reaction times, low by-product solubility, and is safe to handle in air. SiGNa's technology generates hydrogen as needed at <30 psi. More conventional hydrogen storage using compressed gas tanks would require a pressure of over 4,000 psi to store an equivalent amount of hydrogen.

a. Sodium Silicide (NaSi) Reacts with Water to Form Hydrogen

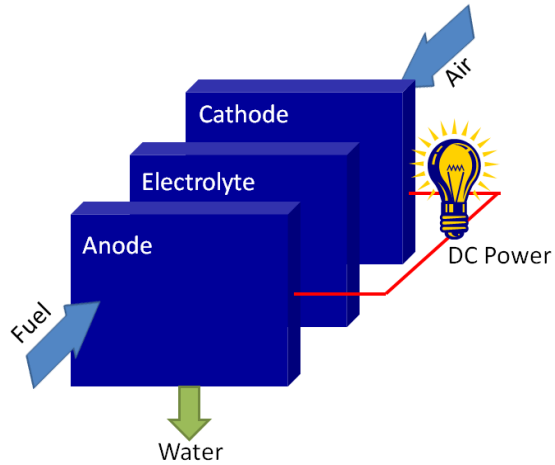

b. Hydrogen is Used as a Fuel for Zero Pollutant Portable Power

Figure 1. Hydrogen Fuel Cell Technology

E-Bike Concept

SiGNa will integrate the reliable power generator into a complete system (Figure 2a) that powers a bicycle and potentially other devices. The system's structure will center on a power manager, which communicates with multiple devices that store, produce, and consume power.

Energy, in the form of sodium silicide, will be stored in the fuel canister, where the power will also be generated. Water from a small (1 liter) reservoir is supplied to the canister. This system can use water of any quality including potable water, polluted water, sea water, or even urine. Hydrogen generated from the reaction between the water and sodium silicide is fed to the fuel cell via a hydrogen control module. The fuel cell then provides energy to the power manager. Once maximum riding distance is reached (i.e., when the sodium silicide is spent) the user is left with a non-toxic by-product (sodium silicate) contained within the disposable or reusable canister. This by-product can be used as an industrial feedstock in multiple industries, such as concrete production, glass, toothpaste, etc. Sodium silicate is also classified as a non-hazardous solid waste under RCRA and can be readily disposed of in municipal waste.

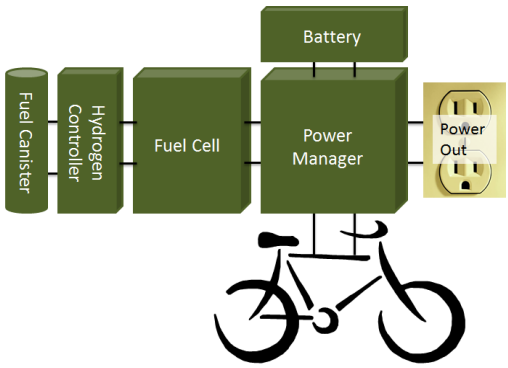

a. Proposed System Architecture

b. SiGNa's Experimental, Generation 0

Fuel Cell-Powered Bicycle.

Figure 2. Sodium Silicide and its use in a transportation application.

The E-Bike's power module will extend the range of electric bicycles from 20 to 100 miles at approximately the same weight. The range can be extended by a further 100 miles (160 km) for each additional sodium silicide cartridge (0.75 kg or 1.65 lb) carried on board with moderate pedaling. Because sodium silicide is solid and non-flammable, these cartridges are inherently safer than other storage alternatives. For instance, a comparable compressed hydrogen system stores flammable gas at 4,000 psi (276 bar) or greater.

SiGNa has fabricated a Generation 0 experimental bicycle to test various use modes (Figure 2b). This experimental system is more of a mobile chemistry laboratory than a prototype; however, this bike is a launching point to develop a fully-refined system and prototype for this USAID program.

Program Plan (Included for Reference)

SiGNa has completed the second month in a nine month program for the development of a prototype fuel cell electric bicycle. The program consists of three primary tasks: Design, Build, and Test. Major deliverables/milestones are associated with those tasks as follows: Design Review Package, Fabrication of First System, and a Final Report. The Final Report will document all elements of the program including final testing and verification.

Name	Duration	Start	Finish	Pre...
Stage I	195 days	**10/1/10 8:00 AM**	**6/30/11 5:00 PM**	
Design Integrated System	66 days	10/1/10 8:00 AM	12/31/10 5:00 PM	
Build Integrated System	64 days	1/3/11 8:00 AM	3/31/11 5:00 PM	2
Test Integrated System	65 days	4/1/11 8:00 AM	6/30/11 5:00 PM	3
Reporting and Administration	195 days	10/1/10 8:00 AM	6/30/11 5:00 PM	
Reporting and Administration	195 days	**10/1/10 8:00 AM**	**6/30/11 5:00 PM**	
Monthly Report 1	21 days	10/1/10 8:00 AM	10/29/10 5:00 PM	
Monthly Report 2	22 days	11/1/10 8:00 AM	11/30/10 5:00 PM	7
Monthly Report 3	23 days	12/1/10 8:00 AM	12/31/10 5:00 PM	8
Monthly Report 4	21 days	1/3/11 8:00 AM	1/31/11 5:00 PM	9
Monthly Report 5	20 days	2/1/11 8:00 AM	2/28/11 5:00 PM	10
Monthly Report 6	23 days	3/1/11 8:00 AM	3/31/11 5:00 PM	11
Monthly Report 7	21 days	4/1/11 8:00 AM	4/29/11 5:00 PM	12
Monthly Report 8	22 days	5/2/11 8:00 AM	5/31/11 5:00 PM	13
Final Report	22 days	6/1/11 8:00 AM	6/30/11 5:00 PM	14
Milestones	195 days	**10/1/10 8:00 AM**	**6/30/11 5:00 PM**	**1SS**
Milestone 1. Design Review Package.	66 days	10/1/10 8:00 AM	12/31/10 5:00 PM	
Milestone 2. First Assembly Completion.	64 days	1/3/11 8:00 AM	3/31/11 5:00 PM	17
Milestone 3. Delivery of Final Report.	65 days	4/1/11 8:00 AM	6/30/11 5:00 PM	18

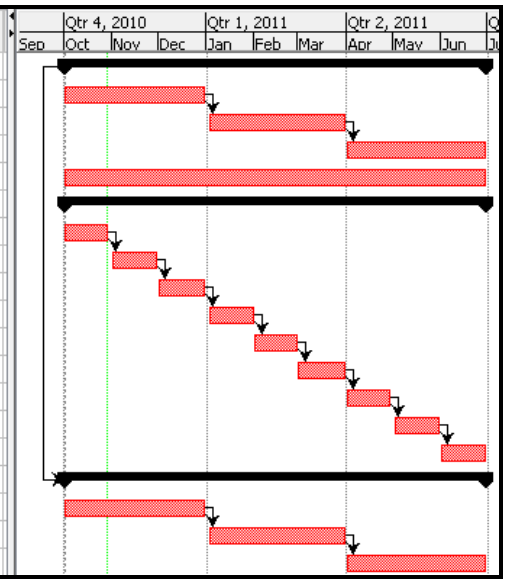

Work Plan (Included for Reference)

To build the integrated E-Bike system, SiGNa will partner with its existing fuel cell supplier and an electric-drive bicycle manufacturer. SiGNa will integrate the individual parts to produce a prototype that can readily be demonstrated and tested by non-technical personnel.

Task 1. Design Integrated System – Systems specifications, concept development, and design

Task 2. Build Integrated System – Component procurement, assembly, and initial debugging

Task 3. Test Integrated System – System testing, system improvements, and final verification

Task 4. Reporting and Administration – Program management and reporting.

WORK PLAN (DETAILED)

Task 1. Design Integrated System (100% Complete. Included for Reference)

The specifications previously developed are shown for easy reference: electric bicycle (Table 1) and the fuel cell power system (Table 2). This quarter we have developed the appropriate bicycle electronics. More specifically, we fabricated a power converter circuit which has controllable output powers and voltages to properly control the battery and fuel cell hybrid system.

Bicycle Type and Design:

A cargo bicycle will likely be used for the Phase I trials. In order to reduce the costs associated with Phase I development, it is anticipated that an existing tandem electric bicycle will be modified to be a cargo bicycle. An existing bicycle is as shown in Figure 3. In addition, discussion with an electric bicycle manufacturer indicated that the "quick release" panniers tend to be expensive and prone to breakage. A low cost two-bag pannier system (Figure 4) which hangs onto both sides of the bike provides significant flexibility in packaging. The two-bag pannier system can readily be modified to include electrical connectors and cabling. In addition, it is very low cost and rapidly removable.

Figure 3. Existing Tandem Electric Bicycle to be Modified to Have a Cargo Platform

The tandem bike pictured above will be modified to accommodate cargo capacity. The front position (or "captain" position) will be unchanged while the rear (or "stoker") position will be replaced with cargo space through a modification of the stoker seat post and handlebars.

A pannier system in the rear of the bike will house the system (Figure 4). The battery will reside in one compartment while the fuel cell and fuel canisters will be in the other. Because the largest system masses will be placed on either side of the center of gravity, the bike should remain more stable.

Figure 4 - Image of Pannier housing of Fuel Cell System

Figure 5 shows the process and instrumentation diagram for the system. Some of the valves and sensors are used primarily for these early systems to facilitate testing and development. Every effort will be used to use low cost components consistent with the application needs.

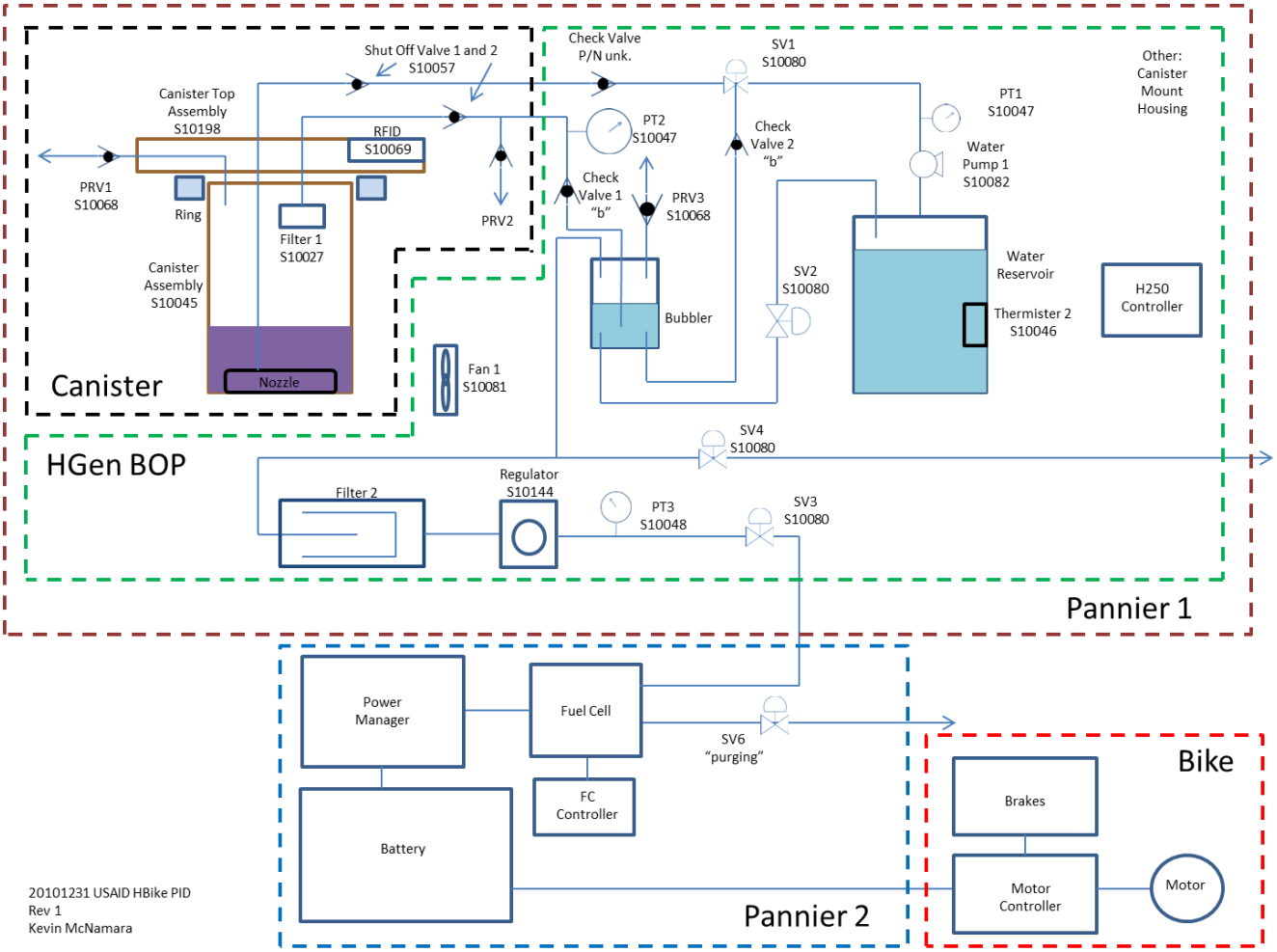

Figure 5 - Process and Instrumentation Diagram of H-Bike System

As shown above, the system will be divided into two parts, The hydrogen generation balance of plant (HGen BOP) and Canister will be housed on one Pannier 1 while the power manager, battery and fuel cell are housed in Pannier 2. Connecting the two sides will be power cables and a hydrogen line. In future generations the HGen Controller may be integrated into the fuel cell controller, thereby eliminating components and increasing the number of inter-pannier connections.

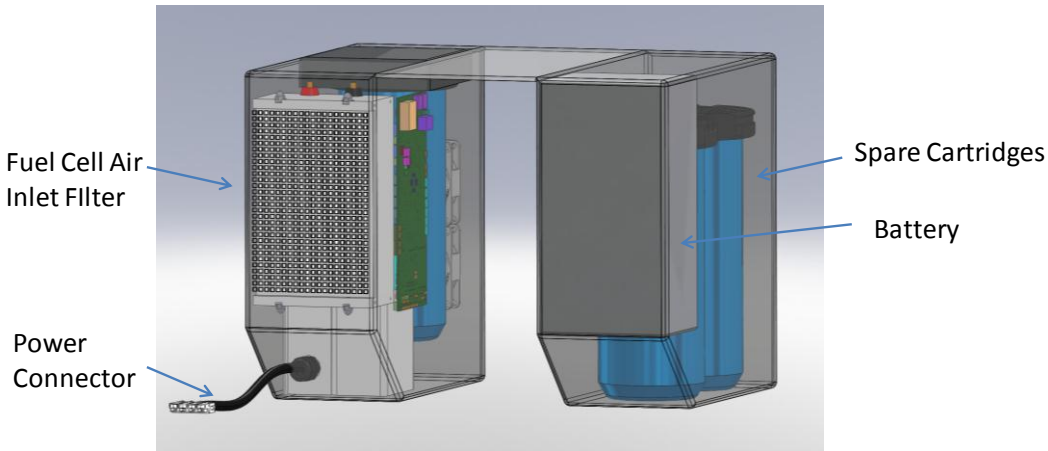

Figure 6 – Schematic of Implemented Hybrid Fuel Cell System

Table 1. H-Bike Specifications

Characteristic	Description or Value	Period of Demonstration
Type	Cargo	Phase I
Carrying Capacity	>200 lb (90 kg)	Phase I
Frame Type	Step-Through	
Electric Motor Power	>300 W	Phase I
Braking	Regenerative for battery recharging	
Electric Motor Generator	May be used for pedal based battery recharging or power output	
Throttle Type	Throttle only & pedal assist	
Max Speed with Electric Assist	20 mph (32 kph)	Phase I
Kickstand	Capable of holding bicycle weight + 250 lb, allows for rider to pedal while stationary for battery recharging	
Tires	Minimum of heavy duty puncture resistance. Foam core tires are possible.	
Battery	Lithium-Polymer, 10 Ah	Phase I
Cargo Racks	Quick release panniers and room for at least one passenger	

Power System Concept and Layout

Our current power system specifications are shown in Table 2. These will be refined throughout the program. No changes are made from the previous month. The power electronics module has now been demonstrated and tested. This circuit board will be updated as part of the final delivery system.

There are a number of AC and DC voltages used in the world. Instead of accommodating them individually with independent voltage regulation, the E-Bike will be configurable to a variety of voltages 12 VDC, 24V, 36 VDC and 48 VDC. Thus, if the user requires a 24 VDC a selector will be used to obtain this potential while a digital indicator will display the output value. A universal DC connector will be used for this output.

The E-Bike will have a separate output for 5V applications using a USB connector for applications like cell phone recharging. The breadth of ouput potential has direct consequences on the larger system. For instance, 54 V is required to recharge a 48 V battery. The complete adjustability of this output is likely not feasible within the Phase I timeframe, but this is being initially prototyped to understand the complete scope of work required and to prepare for the Phase II proposal. A limited range of voltages (minimum of 5V, 36V, and 110VAC) will be available to the user at the completion of Phase I.

Table 2. Fuel Cell Power System Specifications

Characteristic	Description or Value	Period of Demonstration
Fuel Cell Power	>200 W Continuous	Phase I
Hybrid Power System	Battery Recharge or Fuel Cell Only Modes	Phase I
Regenerative Input	Ability to receive and distribute power from electric motor	
Auxiliary Power Outputs	24 V, 12 V, USB*	*Phase I
Self-Start	Fuel cell has ability to start at full power without an external battery	Phase I
Output Display	Health monitoring of system and key usage characteristics	Phase I
Energy Storage	>400 Wh Per Cartridge	Phase I
Cartridge Connection	Easy connection	Phase I
Cartridge Storage	Room for at least four fuel cartridges in panniers	Phase I
Max Cartridge Weight	2.2 lb (1.0 kg)	Phase I
Water Type	Any available	Phase I
Filter	Cleanable Dust Filter	
Transport	Easily removable system capable of bike independent operation	Phase I

Application / Deployment Development

A meeting with USAID was held to assist in the identification of the initial market to be addressed. Continued work is required in this area throughout the Phase I program.

Task 2. Build Integrated System (33% Complete)

A significant focus this month continues to be operational testing and refinement of both the control and power electronics. Figure 7 shows an example of the control parameters that are being varied and the resulting pressure fluctuations in the system. In addition to the reaction controller, a state of charge control algorithm is used to balance the fuel cell capability with the battery state of charge while meeting the bicycle load requirements. A simple representation of this control system is in Figure 8. In addition to the software tuning, the software has been re-configured for the various operation modes.

The existing prototype bicycle is going through daily test rides to test the various software control characteristics.

HDC1_T6: 200g, p=1, i=0.001, d=80, gain scaler = 1, distance = 18.98 miles

Total Hydrogen (SL) 175.2
Fuel Cell (SL) 140.794
FC Purge (SL) 15.0658
Start and OVP Purge (SL) 34.5162
Conversion 160%
Run Time (min) 121.633
Total FC Energy (Wh) 182.724
Energy LHV (Wh) 418.107
FC Effic 43.7%
Tot Load Energy (Wh) 233.655
Tot Batt Energy (Wh) 50.9308

Psi	Current Limit	FC Current(A)	H2 Flow(slpm)
P < 20	1	0.85	0.45
20 < P < 25	3	3.67	1.3
25 < P < 35	3.7	4.95	1.75
35 < P	3.9	5.4	1.95

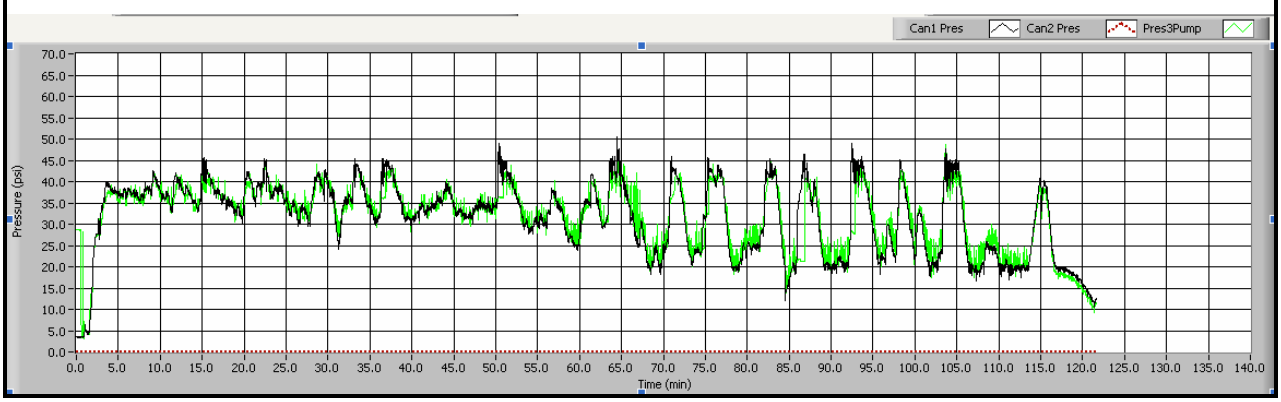

Figure 7 – Control Parameters and Resulting Pressure Variability Example

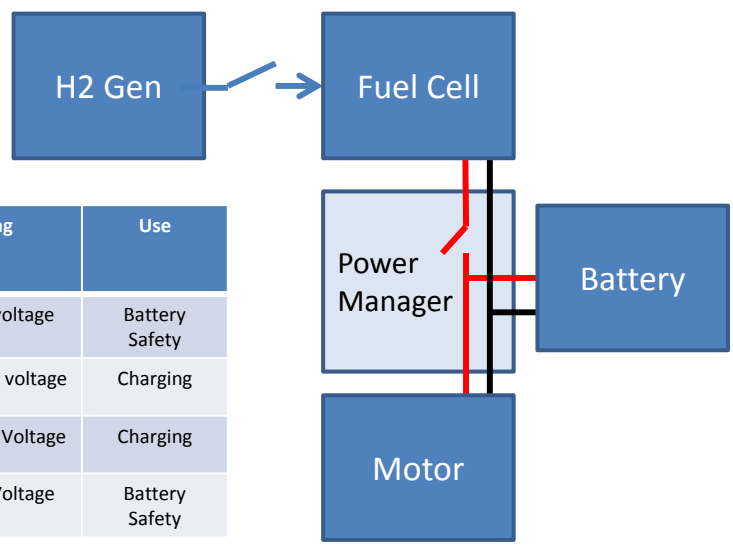

Battery Voltage Level	Meaning	Use
V_{max}	Max safety voltage	Battery Safety
V_{hi}	High Charging voltage	Charging
V_{low}	Low Charging Voltage	Charging
V_{min}	Min Safety Voltage	Battery Safety

Figure 8 – Hybrid Power System and Battery Charging States

State	H2 Gen State	FC State	Battery Circuit	Battery Voltage (V)
Ready Mode	On – Idle	Off	Disconnect	$>V_{hi}$
Start up mode	Start Up	Off/On	Disconnect /On	$<V_{low}$
Run Mode	Run	On	On	$<V_{hi}$
Stop Mode	Stop	Off	Disconnect	N/A

Figure 9 – Modes of Operation and Control Parameters

In month 4, the majority of the testing was done inside under laboratory conditions. However, 7 different test runs were performed totaling 131 miles of bike operation. In addition, an environmental temperature was received in month 4. The chamber was setup and instrumented for operation of the hydrogen generation system. A test was performed at 50 ºC. No issues were the thermal control systems were observed and the heat removal system performed appropriately.

Over the next two-three months, new variations of the various test components will be received that will provided for more improved operation. In particular, the electronics systems are being re-designed to be more integrated and less prone to wiring problems. Significantly more detail about the system components and how they will be implemented in the system will be presented in the following monthly report.

Task 3. Test Integrated System (No Work Performed)

After safety verification and system boundary assessment, the bike system will be first tested for general street use by operating it as a commuter bike in. Davis, CA. Multiple users will operate the bike to get a range of inputs. Stage I testing will primarily consist of a range of tests using local individuals in order to minimize costs associated with traveling and to rapidly incorporate feedback and conduct the appropriate technical modifications. Some of the users that will be used to provide feedback on the system include:

- **Technical staff** will understand system function at a base level and be able to detect and report any performance that deviates from expectations. (Ex. If the E-Bike is able to provide 30% more power than expected this user will note this change)
- **Non-technical staff** appreciate the E-Bike as a product, and not a technical curiosity. These users will ride and present feedback to the engineers about comfort and other usability issues. A non-technical rider might notice that the bike is excellent at hauling groceries if the panniers were a specific dimension or that on a windy day performance seems to increase in one direction.
- **Dedicated cyclists** will notice the mechanical nature of the E-Bike more than the technical staff. Davis, CA is "Platinum" level bike city with more bicycles than cars. The dedicated cyclist users are well versed in all aspects of bicycle technology and ride performance. Break wear and tire repair will be truly appreciated by this population.

The E-bike will be equipped with an electronic monitoring system to assist our technical assessment of the bike. Each user's ride will be tracked to understand the demand profile of the power module, the likely charging and discharging cycles as well as the more mundane issues like performance variation with temperature. Each parameter will be monitored, correlated, and analyzed throughout the study. This data set will allow SiGNa to ensure the E-Bike meets design metrics. In this way, SiGNa will understand both the capabilities of the unit as well as areas that may need improvement.

Task 4. Reporting and Administration (44% Complete)

This task accounts for program management and reporting to the USAID contracting office. Within each monthly report, we will summarize program activities as required. A final report will summarize all of Stage I program activities. This task also includes a kickoff meeting and any subsequent meetings needed to represent our work either in Davis, CA at the SiGNa Chemistry facility or at USAID in Washington, DC.

During month 4, a meeting was held at the USAID office to review the program to date. Follow-up meetings are expected to provide additional clarity on the initial application to be proposed as part of Phase 2.

Table 3. Reporting Deliverables and Milestones

⊟ **Reporting and Administration**
Monthly Report 1
Monthly Report 2
Monthly Report 3
Monthly Report 4
Monthly Report 5
Monthly Report 6
Monthly Report 7
Monthly Report 8
Final Report
⊟ **Milestones**
Milestone 1. Design Review Package.
Milestone 2. First Assembly Completion.
Milestone 3. Delivery of Final Report.

The E-Bike: Practical, Scalable, Pollution-Free Mobile Transportation

Monthly Report 5

February 28, 2011

Awardee	SiGNa Chemistry Alternative Energy Division 720 Olive Drive, Suite C Davis, CA 95616 Grant# AID-OAA-G-10-00012
Primary Contact	Andrew P. Wallace Vice-President of Alternative Energy / Principal Investigator Phone: (530) 554-2217 Email: apwallace@signachem.com Website: www.signachem.com
Type of Business	Small, for-profit business
Other Funders	No other organizations are funding this work
Representative Signature	Andrew P. Wallace
Representative Title	Vice-President of Alternative Energy / Principal Investigator

The E-Bike: Practical, Scalable, Pollution-Free Mobile Transportation

Summary of Current Month Progress

In the fifth month of this program, there has been a continued focus on the operation of the existing laboratory test system. At least 9 runs were performed with multiple demonstrations of over 500 W-hrs of net usable energy per run. Further improvement in the power electronics were made which will make the fuel cell system readily adaptable to a range of applications and electric bicycle types as the output voltage can be configured to be 12, 24, 36, or 48V. Over the next two months, there will be a significant focus on installing the developed components into the removable bicycle panniers. Furthermore, additional follow-up meetings are expected to provide clarity on the initial application to be proposed for Phase II.

Technical Objective (included for reference)

Award Type: Stage 1

In this program, SiGNa Chemistry is developing the E-Bike, an affordable fuel cell-powered bicycle that provides both a clean, efficient mode of transportation and a portable, general purpose power source. The fuel cell power system will incorporate SiGNa's unique clean energy storage solution, which operates at one-sixth the cost, weight and volume of existing battery technologies. The prototype bicycle will be rugged, lightweight, and have a base range of up to 100 miles, which is 300% farther than the range achieved by equivalently-sized high-performance batteries. The portable power module will be designed for easy removal from the bicycle so that it can also be used as a stand-alone power source for non-transportation functions, like powering pumps, lights, cell phones, etc. The only emissions from the E-Bike will be water vapor and air, which is not the case with scooters powered by internal combustion engines (one of the highest emitters of green-house gases and air pollutants).

The technology in this program will dramatically improve the lives of tens of millions of people in developing countries. The E-Bike and its power module will have three primary uses: (1) as a long-range, pollution-free, powered transportation alternative, (2) as a general purpose mobile power source, and (3) as a transportation and power platform in emergency or disaster relief efforts. A key differentiator for this system is its portable power module, which is designed to operate independently from the electric bicycle. This technology will provide millions of people with access to a stable, general purpose mobile power source that can operate, for example, computers, cell phones, refrigerators, or water pumps. *As more than 1.45 billion people worldwide do not have access to electricity (IEA 2009), the scaling potential for this portable power system to improve lives is staggering.* This system will also be a valuable tool in emergency or disaster situations, where the portable power module could be used to power emergency response systems, medical refrigerators, and telecommunications repeater stations.

Countless socio-economic boundaries can be bridged using this system when this technology is developed to a point that it is viable for scaled manufacturing.

Method of Approach (Included For Reference)

In the proposed Stage 1 program, SiGNa Chemistry will design, build, and test a fuel cell-powered bicycle prototype for use in developing nations and areas in need of disaster relief. The prototype bicycle and power module will be demonstrated during in-house evaluations and, potentially, in limited field trials.

Fuel Cell Technology

Fuel cells convert chemical energy (typically hydrogen) into electrical energy at significantly higher efficiencies (50%) than internal combustion engines (12-13%). The fuel cell device has no moving parts; instead, it functions like a battery with anodic and cathodic reactions (Figure 1). The only inputs are hydrogen and air and the only emissions are water, air and DC power. Because there are no moving parts, fuel cell systems typically operate for thousands of hours before maintenance is required.

Despite the advantages of fuel cell power, it has not been widely adopted, primarily because the storage of gaseous hydrogen is problematic. SiGNa Chemistry has overcome this challenge by developing a process where

solid sodium silicide (NaSi) reacts with any water to instantaneously produce clean hydrogen gas. This unique NaSi material has fast reaction times, low by-product solubility, and is safe to handle in air. SiGNa's technology generates hydrogen as needed at <30 psi. More conventional hydrogen storage using compressed gas tanks would require a pressure of over 4,000 psi to store an equivalent amount of hydrogen.

a. Sodium Silicide (NaSi) Reacts with Water to Form Hydrogen

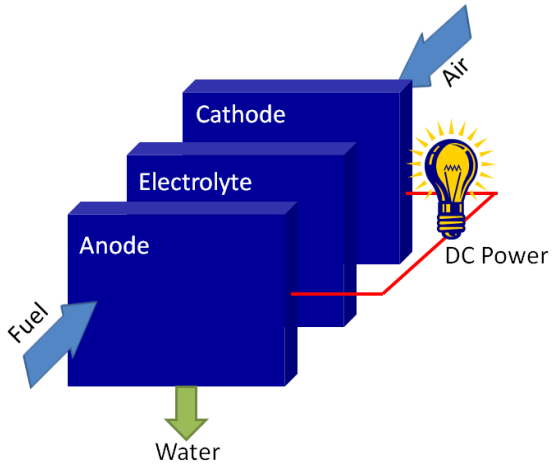

b. Hydrogen is Used as a Fuel for Zero Pollutant Portable Power

Figure 1. Hydrogen Fuel Cell Technology

E-Bike Concept

SiGNa will integrate the reliable power generator into a complete system (Figure 2a) that powers a bicycle and potentially other devices. The system's structure will center on a power manager, which communicates with multiple devices that store, produce, and consume power.

Energy, in the form of sodium silicide, will be stored in the fuel canister, where the power will also be generated. Water from a small (1 liter) reservoir is supplied to the canister. This system can use water of any quality including potable water, polluted water, sea water, or even urine. Hydrogen generated from the reaction between the water and sodium silicide is fed to the fuel cell via a hydrogen control module. The fuel cell then provides energy to the power manager. Once maximum riding distance is reached (i.e., when the sodium silicide is spent) the user is left with a non-toxic by-product (sodium silicate) contained within the disposable or reusable canister. This by-product can be used as an industrial feedstock in multiple industries, such as concrete production, glass, toothpaste, etc. Sodium silicate is also classified as a non-hazardous solid waste under RCRA and can be readily disposed of in municipal waste.

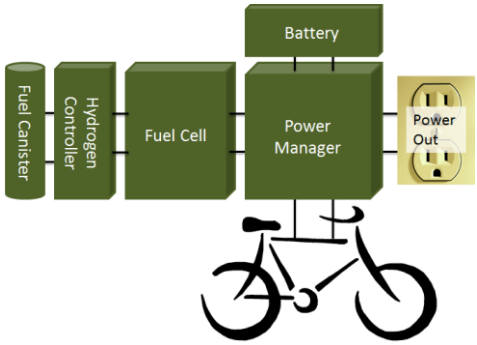

a. Proposed System Architecture

b. SiGNa's Experimental, Generation 0 Fuel Cell-Powered Bicycle.

Figure 2. Sodium Silicide and its use in a transportation application.

The E-Bike's power module will extend the range of electric bicycles from 20 to 100 miles at approximately the same weight. The range can be extended by a further 100 miles (160 km) for each additional sodium silicide cartridge (0.75 kg or 1.65 lb) carried on board with moderate pedaling. Because sodium silicide is solid and non-flammable, these cartridges are inherently safer than other storage alternatives. For instance, a comparable compressed hydrogen system stores flammable gas at 4,000 psi (276 bar) or greater.

SiGNa has fabricated a Generation 0 experimental bicycle to test various use modes (Figure 2b). This experimental system is more of a mobile chemistry laboratory than a prototype; however, this bike is a launching point to develop a fully-refined system and prototype for this USAID program.

Program Plan (Included for Reference)

SiGNa has completed the second month in a nine month program for the development of a prototype fuel cell electric bicycle. The program consists of three primary tasks: Design, Build, and Test. Major deliverables/milestones are associated with those tasks as follows: Design Review Package, Fabrication of First System, and a Final Report. The Final Report will document all elements of the program including final testing and verification.

Work Plan (Included for Reference)

To build the integrated E-Bike system, SiGNa will partner with its existing fuel cell supplier and an electric-drive bicycle manufacturer. SiGNa will integrate the individual parts to produce a prototype that can readily be demonstrated and tested by non-technical personnel.

Task 1. Design Integrated System – Systems specifications, concept development, and design

Task 2. Build Integrated System – Component procurement, assembly, and initial debugging

Task 3. Test Integrated System – System testing, system improvements, and final verification

Task 4. Reporting and Administration – Program management and reporting.

WORK PLAN (DETAILED)

Task 1. Design Integrated System (100% Complete. Included for Reference)

The specifications previously developed are shown for easy reference: electric bicycle (Table 1) and the fuel cell power system (Table 2). This quarter we have developed the appropriate bicycle electronics. More specifically, we fabricated a power converter circuit which has controllable output powers and voltages to properly control the battery and fuel cell hybrid system.

Bicycle Type and Design:

A cargo bicycle will likely be used for the Phase I trials. In order to reduce the costs associated with Phase I development, it is anticipated that an existing tandem electric bicycle will be modified to be a cargo bicycle. An existing bicycle is as shown in Figure 3. In addition, discussion with an electric bicycle manufacturer indicated that the "quick release" panniers tend to be expensive and prone to breakage. A low cost two-bag pannier system (Figure 4) which hangs onto both sides of the bike provides significant flexibility in packaging. The two-bag pannier system can readily be modified to include electrical connectors and cabling. In addition, it is very low cost and rapidly removable.

Figure 3. Existing Tandem Electric Bicycle to be Modified to Have a Cargo Platform

The tandem bike pictured above will be modified to accommodate cargo capacity. The front position (or "captain" position) will be unchanged while the rear (or "stoker") position will be replaced with cargo space through a modification of the stoker seat post and handlebars.

A pannier system in the rear of the bike will house the system (Figure 4). The battery will reside in one compartment while the fuel cell and fuel canisters will be in the other. Because the largest system masses will be placed on either side of the center of gravity, the bike should remain more stable.

Figure 4 - Image of Pannier housing of Fuel Cell System

Figure 5 shows the process and instrumentation diagram for the system. Some of the valves and sensors are used primarily for these early systems to facilitate testing and development. Every effort will be used to use low cost components consistent with the application needs.

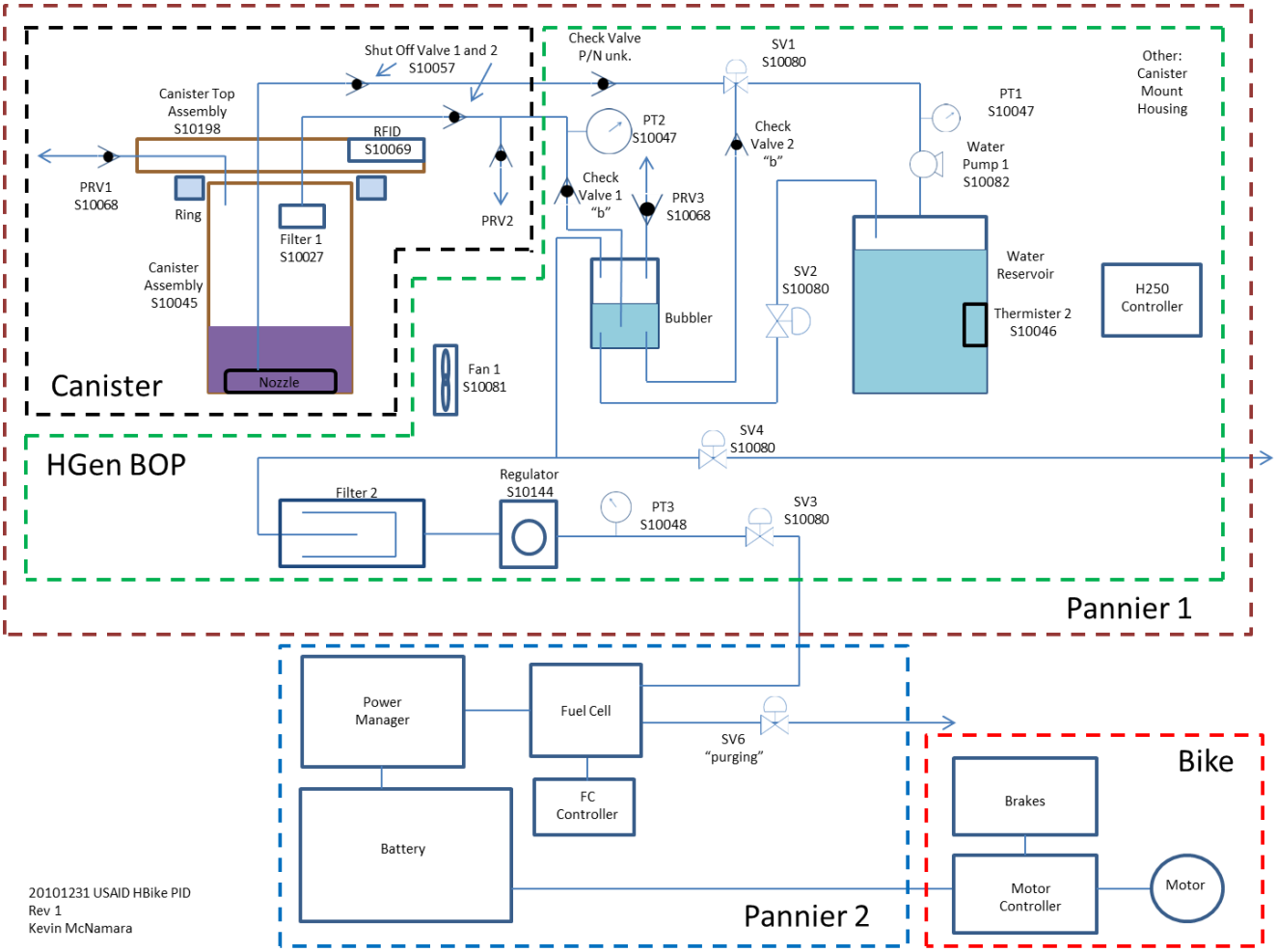

Figure 5 - Process and Instrumentation Diagram of H-Bike System

As shown above, the system will be divided into two parts, The hydrogen generation balance of plant (HGen BOP) and Canister will be housed on one Pannier 1 while the power manager, battery and fuel cell are housed in Pannier 2. Connecting the two sides will be power cables and a hydrogen line. In future generations the HGen Controller may be integrated into the fuel cell controller, thereby eliminating components and increasing the number of inter-pannier connections.

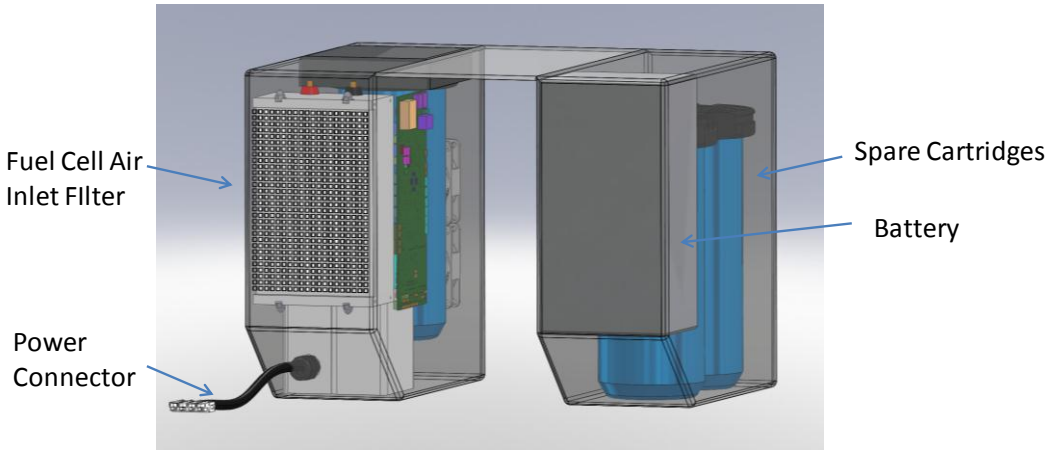

Figure 6 – Schematic of Implemented Hybrid Fuel Cell System

Table 1. H-Bike Specifications

Characteristic	Description or Value	Period of Demonstration
Type	Cargo	Phase I
Carrying Capacity	>200 lb (90 kg)	Phase I
Frame Type	Step-Through	
Electric Motor Power	>300 W	Phase I
Braking	Regenerative for battery recharging	
Electric Motor Generator	May be used for pedal based battery recharging or power output	
Throttle Type	Throttle only & pedal assist	
Max Speed with Electric Assist	20 mph (32 kph)	Phase I
Kickstand	Capable of holding bicycle weight + 250 lb, allows for rider to pedal while stationary for battery recharging	
Tires	Minimum of heavy duty puncture resistance. Foam core tires are possible.	
Battery	Lithium-Polymer, 10 Ah	Phase I
Cargo Racks	Quick release panniers and room for at least one passenger	

Power System Concept and Layout

Our current power system specifications are shown in Table 2. These will be refined throughout the program. No changes are made from the previous month. The power electronics module has now been demonstrated and tested. This circuit board will be updated as part of the final delivery system.

There are a number of AC and DC voltages used in the world. Instead of accommodating them individually with independent voltage regulation, the E-Bike will be configurable to a variety of voltages 12 VDC, 24V, 36 VDC and 48 VDC. Thus, if the user requires a 24 VDC a selector will be used to obtain this potential while a digital indicator will display the output value. A universal DC connector will be used for this output.

The E-Bike will have a separate output for 5V applications using a USB connector for applications like cell phone recharging. The breadth of ouput potential has direct consequences on the larger system. For instance, 54 V is required to recharge a 48 V battery. The complete adjustability of this output is likely not feasible within the Phase I timeframe, but this is being initially prototyped to understand the complete scope of work required and to prepare for the Phase II proposal. A limited range of voltages (minimum of 5V, 36V, and 110VAC) will be available to the user at the completion of Phase I.

Table 2. Fuel Cell Power System Specifications

Characteristic	Description or Value	Period of Demonstration
Fuel Cell Power	>200 W Continuous	Phase I
Hybrid Power System	Battery Recharge or Fuel Cell Only Modes	Phase I
Regenerative Input	Ability to receive and distribute power from electric motor	

Auxiliary Power Outputs	24 V, 12 V, USB*	*Phase I
Self-Start	Fuel cell has ability to start at full power without an external battery	Phase I
Output Display	Health monitoring of system and key usage characteristics	Phase I
Energy Storage	>400 Wh Per Cartridge	Phase I
Cartridge Connection	Easy connection	Phase I
Cartridge Storage	Room for at least four fuel cartridges in panniers	Phase I
Max Cartridge Weight	2.2 lb (1.0 kg)	Phase I
Water Type	Any available	Phase I
Filter	Cleanable Dust Filter	
Transport	Easily removable system capable of bike independent operation	Phase I

Application / Deployment Development

Task 2. Build Integrated System (66% Complete)

A fuel cell stack and controller was selected this month. The selected stack is expected to provide a similar power output at a much smaller footprint. The fuel cell stack of the new design will not be available until approximately April 15. The stack is expected to readily connect up to the existing gas and electrical connections.

An important new power control module chip was found. The power control electronics are currently being assembled with this module and tested. Not only is the module readily available, it is expected that is will facilitate a selectable output of 12, 24, 36, or 48 V in a following phase with minimal additional development. This will allow the use of the developed system for a wide range of electric bicycles and other equipment.

The cartridge testing as continued. Nine of the test runs were as shown in

Table 3. It was readily shown that cartridge can yield over 375 liters of hydrogen, which is equivalent to 515 W-Hrs of energy. It is expected that this number will continue to increase.

Over the next month, a significant focus will be installing the various components and sub-systems into the removable panniers. A method for quickly stabilizing the components such as foam or other easily formed supports is being developed.

Table 3. Test Examples in Month of February

2/2/11	HDC1_T6	200	p=1, i=0.001, d=80, gain scaler =1, auto CL control based on pressure	175.3
2/11/11	HDC1_T7	250	p=1, d=80, auto CL control	261.26
2/14/11	HDC2_T8	300	p=1, d=80, auto CL control	326.19
2/15/11	RBC5_T11	50	p=1,d=80, auto CL control	48.72
2/16/11	HDC1_T8	100	p=1, d=80, auto CL control	96.46
2/18/11	HDC1_T9	350	p=1, d=80, mfc = 2slpm(100 mins); 1slpm(final 300mins)	373.54
2/21/11	HDC2_T9/10	350	p=1, d=80, mfc = 1.3slpm	375.68
2/24/11	HDC1_T10/11	350	swapped out bad pump. P=1, d=40, F140, mfc=1.2	397.8
2/25/11	HDC2_T11	350	p=1,d=40, F130, mfc=1.2	396.77

Task 3. Test Integrated System (No Work Performed)

After safety verification and system boundary assessment, the bike system will be first tested for general street use by operating it as a commuter bike in. Davis, CA. Multiple users will operate the bike to get a range of inputs. Stage I testing will primarily consist of a range of tests using local individuals in order to minimize costs associated with traveling and to rapidly incorporate feedback and conduct the appropriate technical modifications. Some of the users that will be used to provide feedback on the system include:

- **Technical staff** will understand system function at a base level and be able to detect and report any performance that deviates from expectations. (Ex. If the E-Bike is able to provide 30% more power than expected this user will note this change)

- **Non-technical staff** appreciate the E-Bike as a product, and not a technical curiosity. These users will ride and present feedback to the engineers about comfort and other usability issues. A non-technical rider might notice that the bike is excellent at hauling groceries if the panniers were a specific dimension or that on a windy day performance seems to increase in one direction.
- **Dedicated cyclists** will notice the mechanical nature of the E-Bike more than the technical staff. Davis, CA is "Platinum" level bike city with more bicycles than cars. The dedicated cyclist users are well versed in all aspects of bicycle technology and ride performance. Break wear and tire repair will be truly appreciated by this population.

The E-bike will be equipped with an electronic monitoring system to assist our technical assessment of the bike. Each user's ride will be tracked to understand the demand profile of the power module, the likely charging and discharging cycles as well as the more mundane issues like performance variation with temperature. Each parameter will be monitored, correlated, and analyzed throughout the study. This data set will allow SiGNa to ensure the E-Bike meets design metrics. In this way, SiGNa will understand both the capabilities of the unit as well as areas that may need improvement.

Task 4. Reporting and Administration (55% Complete)

This task accounts for program management and reporting to the USAID contracting office. Within each monthly report, we will summarize program activities as required. A final report will summarize all of Stage I program activities. This task also includes a kickoff meeting and any subsequent meetings needed to represent our work either in Davis, CA at the SiGNa Chemistry facility or at USAID in Washington, DC.

During month 4, a meeting was held at the USAID office to review the program to date. Follow-up meetings are expected to provide additional clarity on the initial application to be proposed as part of Phase 2.

Table 4. Reporting Deliverables and Milestones

⊟ **Reporting and Administration**
Monthly Report 1
Monthly Report 2
Monthly Report 3
Monthly Report 4
Monthly Report 5
Monthly Report 6
Monthly Report 7
Monthly Report 8
Final Report
⊟ **Milestones**
Milestone 1. Design Review Package.
Milestone 2. First Assembly Completion.
Milestone 3. Delivery of Final Report.

The E-Bike: Practical, Scalable, Pollution-Free Mobile Transportation

Monthly Report 6

March 31, 2011

Awardee	SiGNa Chemistry Alternative Energy Division 720 Olive Drive, Suite C Davis, CA 95616 Grant# AID-OAA-G-10-00012
Primary Contact	Andrew P. Wallace Vice-President of Alternative Energy / Principal Investigator Phone: (530) 554-2217 Email: apwallace@signachem.com Website: www.signachem.com
Type of Business	Small, for-profit business
Other Funders	No other organizations are funding this work
Representative Signature	Andrew P. Wallace
Representative Title	Vice-President of Alternative Energy / Principal Investigator

The E-Bike: Practical, Scalable, Pollution-Free Mobile Transportation

Summary of Current Month Progress

In the sixth month of this program, we have completed the initial mechanical layout of the prototype system. A new fuel cell stack and stack controller were received. Basic operation of the fuel cell stack and the compatibility with SiGNa's hydrogen technology were completed. The new fuel cell stack and balance of plant components were integrated into a removable bag system and basic operation was verified. Further environmental testing was performed at temperatures between 5 and 50°C on control test hardware; no significant variations in performance were observed. In the next 1-2 months a new electronic circuit board will be received which will improve overall operation of the system. In addition, numerous modifications are planned such as modification to the "power-bag" with a handle and the appropriate vents and screens.

Next-Generation Fuel Cell Portable Power System

Technical Objective (included for reference)

Award Type: Stage 1

In this program, SiGNa Chemistry is developing the E-Bike, an affordable fuel cell-powered bicycle that provides both a clean, efficient mode of transportation and a portable, general purpose power source. The fuel cell power system will incorporate SiGNa's unique clean energy storage solution, which operates at one-sixth the cost, weight and volume of existing battery technologies. The prototype bicycle will be rugged, lightweight, and have a base range of up to 100 miles, which is 300% farther than the range achieved by equivalently-sized high-performance batteries. The portable power module will be designed for easy removal from the bicycle so that it can also be used as a stand-alone power source for non-transportation functions, like powering pumps, lights, cell phones, etc. The only emissions from the E-Bike will be water vapor and air, which is not the case with scooters powered by internal combustion engines (one of the highest emitters of green-house gases and air pollutants).

The technology in this program will dramatically improve the lives of tens of millions of people in developing countries. The E-Bike and its power module will have three primary uses: (1) as a long-range, pollution-free, powered transportation alternative, (2) as a general purpose mobile power source, and (3) as a transportation and power platform in emergency or disaster relief efforts. A key differentiator for this system is its portable power module, which is designed to operate independently from the electric bicycle. This technology will provide millions of people with access to a stable, general purpose mobile power source that can operate, for example, computers, cell phones, refrigerators, or water pumps. *As more than 1.45 billion people worldwide do not have access to electricity (IEA 2009), the scaling potential for this portable power system to improve lives is staggering.* This system will also be a valuable tool in emergency or disaster situations, where

the portable power module could be used to power emergency response systems, medical refrigerators, and telecommunications repeater stations.

Countless socio-economic boundaries can be bridged using this system when this technology is developed to a point that it is viable for scaled manufacturing.

Method of Approach (Included For Reference)

In the proposed Stage 1 program, SiGNa Chemistry will design, build, and test a fuel cell-powered bicycle prototype for use in developing nations and areas in need of disaster relief. The prototype bicycle and power module will be demonstrated during in-house evaluations and, potentially, in limited field trials.

Fuel Cell Technology

Fuel cells convert chemical energy (typically hydrogen) into electrical energy at significantly higher efficiencies (50%) than internal combustion engines (12-13%). The fuel cell device has no moving parts; instead, it functions like a battery with anodic and cathodic reactions (Figure 1). The only inputs are hydrogen and air and the only emissions are water, air and DC power. Because there are no moving parts, fuel cell systems typically operate for thousands of hours before maintenance is required.

Despite the advantages of fuel cell power, it has not been widely adopted, primarily because the storage of gaseous hydrogen is problematic. SiGNa Chemistry has overcome this challenge by developing a process where solid sodium silicide (NaSi) reacts with any water to instantaneously produce clean hydrogen gas. This unique NaSi material has fast reaction times, low by-product solubility, and is safe to handle in air. SiGNa's technology generates hydrogen as needed at <30 psi. More conventional hydrogen storage using compressed gas tanks would require a pressure of over 4,000 psi to store an equivalent amount of hydrogen.

a. Sodium Silicide (NaSi) Reacts with Water to Form Hydrogen

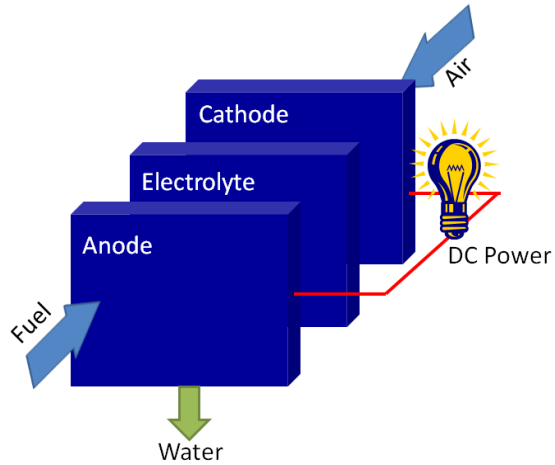

b. Hydrogen is Used as a Fuel for Zero Pollutant Portable Power

Figure 1. Hydrogen Fuel Cell Technology

E-Bike Concept

SiGNa will integrate the reliable power generator into a complete system (Figure 2a) that powers a bicycle and potentially other devices. The system's structure will center on a power manager, which communicates with multiple devices that store, produce, and consume power.

Energy, in the form of sodium silicide, will be stored in the fuel canister, where the power will also be generated. Water from a small (1 liter) reservoir is supplied to the canister. This system can use water of any quality including potable water, polluted water, sea water, or even urine. Hydrogen generated from the reaction between the water and sodium silicide is fed to the fuel cell via a hydrogen control module. The fuel cell then provides energy to the power manager. Once maximum riding distance is reached (i.e., when the sodium silicide is spent) the user is left with a non-toxic by-product (sodium silicate) contained within the disposable or reusable canister. This by-product can be used as an industrial feedstock in multiple industries, such as concrete

production, glass, toothpaste, etc. Sodium silicate is also classified as a non-hazardous solid waste under RCRA and can be readily disposed of in municipal waste.

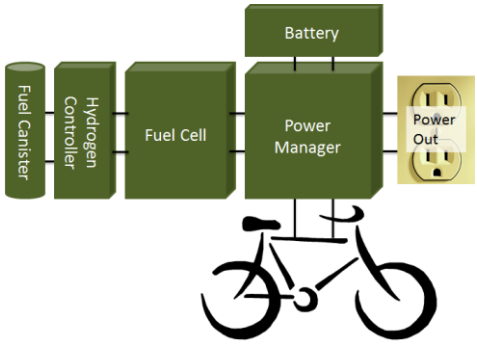

a. Proposed System Architecture

b. SiGNa's Experimental, Generation 0 Fuel Cell-Powered Bicycle.

Figure 2. Sodium Silicide and its use in a transportation application.

The E-Bike's power module will extend the range of electric bicycles from 20 to 100 miles at approximately the same weight. The range can be extended by a further 100 miles (160 km) for each additional sodium silicide cartridge (0.75 kg or 1.65 lb) carried on board with moderate pedaling. Because sodium silicide is solid and non-flammable, these cartridges are inherently safer than other storage alternatives. For instance, a comparable compressed hydrogen system stores flammable gas at 4,000 psi (276 bar) or greater.

SiGNa has fabricated a Generation 0 experimental bicycle to test various use modes (Figure 2b). This experimental system is more of a mobile chemistry laboratory than a prototype; however, this bike is a launching point to develop a fully-refined system and prototype for this USAID program.

Program Plan (Included for Reference)

SiGNa has completed the second month in a nine month program for the development of a prototype fuel cell electric bicycle. The program consists of three primary tasks: Design, Build, and Test. Major deliverables/milestones are associated with those tasks as follows: Design Review Package, Fabrication of First System, and a Final Report. The Final Report will document all elements of the program including final testing and verification.

Work Plan (Included for Reference)

To build the integrated E-Bike system, SiGNa will partner with its existing fuel cell supplier and an electric-drive bicycle manufacturer. SiGNa will integrate the individual parts to produce a prototype that can readily be demonstrated and tested by non-technical personnel.

Task 1. Design Integrated System – Systems specifications, concept development, and design

Task 2. Build Integrated System – Component procurement, assembly, and initial debugging

Task 3. Test Integrated System – System testing, system improvements, and final verification

Task 4. Reporting and Administration – Program management and reporting.

WORK PLAN (DETAILED)

Task 1. Design Integrated System (100% Complete)

Completed in prior months.

Task 2. Build Integrated System (75% Complete)

All of the core mechanical components were integrated and basic testing performed in Month 6. A subcontract was issued to Jadoo Power for two fuel cell stacks. One of which was received in Month 6, and the second will be received in Month 7. The fuel cell stack is approximately one-half the size of that used from a previous vendor. The stack was verified to output about 220 Watts of power and 180 Watts is required for normal no-pedal operation of a bicycle. Some minor modifications are required in SiGNa's electronics to properly interact with the fuel cell. Specifically, the fuel cell stack has specific start-up, shut-down instructions required. Those are currently being implemented in the SiGNa electronics. All core operational characteristics have been verified under nominal conditions.

Figure 3. Fuel Cell Stack

The fuel cell stack and hydrogen canister sub-assembly were mounted on a thin aluminum L-bracket to facilitate mounting of the various components outside the bag system. This entire sub-system is then placed inside the bag. In the final configuration, open space for storage above the fuel cell volume will be available. Mechanical ducts will be used to route the fuel cell air underneath this storage space.

Figure 4. Core Mechanical Components

The initially selected bag has more than sufficient room to house all components. A significant storage compartment will also be made available on the right-side of the opening in the photo below. The bag still requires modifications to readily remove the canister in and out of the bag.

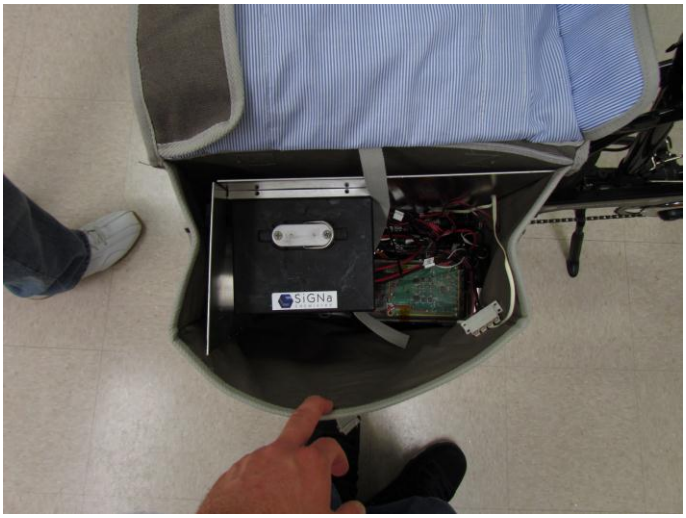

Figure 5. Core Mechanical and Breadboard Electrical Components installed in Bag

The corresponding bag has the battery installed at the bottom of the bag. Significant storage space is still available. Up to six spare canisters can be stored or other supplies as desired.

Figure 6. Battery in Secondary Compartment. Significant Room for Spare Canisters and Other Items.

A basic operational test was completed on the bicycle with the next generation system components for preliminary evaluation. Final integration of the newly developed electronics and miscellaneous mechanical modifications will occur over the next six weeks. The system will undergo significant testing over the next three months as part of Phase I completion.

Figure 7. Fuel Cell Power System on an Electric Bicycle Example Application

Task 3. Test Integrated System (25%)

Significant operational testing on the system components is continuing. New results include environment tests at both 5 and 50 °C. No significant changes in performance were observed. The system can operate below 0°C if salt water is used, but this will not likely be tested in Phase I. Basic operational testing with salt water has been performed in a separate program.

Table 1. Example Environmental Test Results

	NaSi (g)	Total H2 (L)	Total H20 (mL)	Overstoic %	Temperature setpoint (°C)	H2 flow rate (slpm)	Ambient Temp(°C)	Conversion %	Mechanical Issues
RBC5_T13	250	289.2	863.07	303	95	1.6	5 (30 min soak)	96.7	n/a
HDC2_T14	250	288.64	830	318.59	95	1.6	5 (30 min soak)	96	n/a
RBC5_T14	350	390.66	1151.6	300.34	95	1.6	5 (overnight soak)	94	n/a
HDC1_T17	350	394.377	1090.5	275.63	95	1.6	50 / 40%RH (2 hour soak)	94	Output psi regulator 'floats' in the hot temp

The figure below represents a sample of the data collected during each operational run. Some parameters vary, but the overall system is designed to output constant power output as the control system is used to vary hydrogen generation, fuel cell power, and battery power to deliver the user required load.

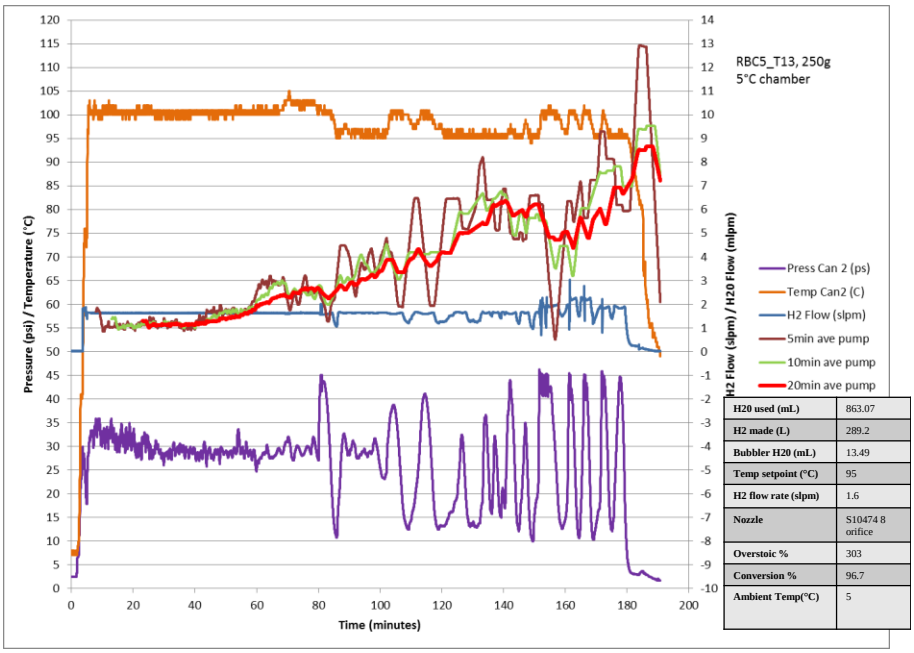

H20 used (mL)	863.07
H2 made (L)	289.2
Bubbler H20 (mL)	13.49
Temp setpoint (°C)	95
H2 flow rate (slpm)	1.6
Nozzle	S10474 8 orifice
Overstoic %	303
Conversion %	96.7
Ambient Temp(°C)	5

Figure 8. Example Results of Hydrogen Generation System When Operated at 5 °C

Task 4. Reporting and Administration (67% Complete)

This task accounts for program management and reporting to the USAID contracting office. Within each monthly report, we will summarize program activities as required. A final report will summarize all of Stage I program activities. This task also includes a kickoff meeting and any subsequent meetings needed to represent our work either in Davis, CA at the SiGNa Chemistry facility or at USAID in Washington, DC.

Table 2. Reporting Deliverables and Milestones

Reporting and Administration
Monthly Report 1
Monthly Report 2
Monthly Report 3
Monthly Report 4
Monthly Report 5
Monthly Report 6
Monthly Report 7
Monthly Report 8
Final Report
Milestones
Milestone 1. Design Review Package.
Milestone 2. First Assembly Completion.
Milestone 3. Delivery of Final Report.

The E-Bike: Practical, Scalable, Pollution-Free Mobile Transportation

Monthly Report 7

April 30, 2011

Awardee	SiGNa Chemistry Alternative Energy Division 720 Olive Drive, Suite C Davis, CA 95616 Grant# AID-OAA-G-10-00012
Primary Contact	Andrew P. Wallace Vice-President of Alternative Energy / Principal Investigator Phone: (530) 554-2217 Email: apwallace@signachem.com Website: www.signachem.com
Type of Business	Small, for-profit business
Other Funders	No other organizations are funding this work
Representative Signature	Andrew P. Wallace
Representative Title	Vice-President of Alternative Energy / Principal Investigator

The E-Bike: Practical, Scalable, Pollution-Free Mobile Transportation

Summary of Current Month Progress

In the seventh month of this program, we are continuing to improve the mechanical system layout. The fuel cell stack and stack controller have been tested in multiple conditions. Multiple firmware issues have been identified and are currently being resolved. A new control power module was tested. This power module facilitates direct interoperability with the fuel cell system and 12, 24, or 36 V applications. A circuit board redesign was completed which integrates the new power control module and control electronics which will be completed in month 8. In addition, significant testing continues. In particular, a startup and operational test were performed at -10 deg C on the hydrogen generation system. This demonstrated one of the only chemical storage hydrogen methods to generate hydrogen instantaneously at below freezing conditions.

Technical Objective (included for reference)

Award Type: Stage 1

In this program, SiGNa Chemistry is developing the E-Bike, an affordable fuel cell-powered bicycle that provides both a clean, efficient mode of transportation and a portable, general purpose power source. The fuel cell power system will incorporate SiGNa's unique clean energy storage solution, which operates at one-sixth the cost, weight and volume of existing battery technologies. The prototype bicycle will be rugged, lightweight, and have a base range of up to 100 miles, which is 300% farther than the range achieved by equivalently-sized high-performance batteries. The portable power module will be designed for easy removal from the bicycle so that it can also be used as a stand-alone power source for non-transportation functions, like powering pumps, lights, cell phones, etc. The only emissions from the E-Bike will be water vapor and air, which is not the case with scooters powered by internal combustion engines (one of the highest emitters of green-house gases and air pollutants).

The technology in this program will dramatically improve the lives of tens of millions of people in developing countries. The E-Bike and its power module will have three primary uses: (1) as a long-range, pollution-free, powered transportation alternative, (2) as a general purpose mobile power source, and (3) as a transportation and power platform in emergency or disaster relief efforts. A key differentiator for this system is its portable power module, which is designed to operate independently from the electric bicycle. This technology will provide millions of people with access to a stable, general purpose mobile power source that can operate, for example, computers, cell phones, refrigerators, or water pumps. *As more than 1.45 billion people worldwide do not have access to electricity (IEA 2009), the scaling potential for this portable power system to improve lives is staggering.* This system will also be a valuable tool in emergency or disaster situations, where the portable power module could be used to power emergency response systems, medical refrigerators, and telecommunications repeater stations.

Countless socio-economic boundaries can be bridged using this system when this technology is developed to a point that it is viable for scaled manufacturing.

Method of Approach (Included For Reference)

In the proposed Stage 1 program, SiGNa Chemistry will design, build, and test a fuel cell-powered bicycle prototype for use in developing nations and areas in need of disaster relief. The prototype bicycle and power module will be demonstrated during in-house evaluations and, potentially, in limited field trials.

Fuel Cell Technology

Fuel cells convert chemical energy (typically hydrogen) into electrical energy at significantly higher efficiencies (50%) than internal combustion engines (12-13%). The fuel cell device has no moving parts; instead, it functions like a battery with anodic and cathodic reactions (Figure 1). The only inputs are hydrogen and air and the only emissions are water, air and DC power. Because there are no moving parts, fuel cell systems typically operate for thousands of hours before maintenance is required.

Despite the advantages of fuel cell power, it has not been widely adopted, primarily because the storage of gaseous hydrogen is problematic. SiGNa Chemistry has overcome this challenge by developing a process where

solid sodium silicide (NaSi) reacts with any water to instantaneously produce clean hydrogen gas. This unique NaSi material has fast reaction times, low by-product solubility, and is safe to handle in air. SiGNa's technology generates hydrogen as needed at <30 psi. More conventional hydrogen storage using compressed gas tanks would require a pressure of over 4,000 psi to store an equivalent amount of hydrogen.

a. Sodium Silicide (NaSi) Reacts with Water to Form Hydrogen

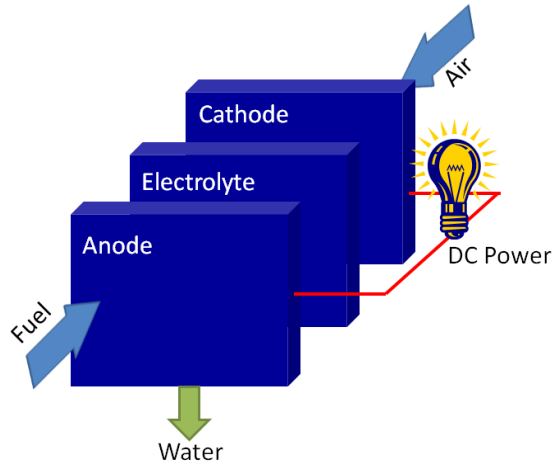

b. Hydrogen is Used as a Fuel for Zero Pollutant Portable Power

Figure 1. Hydrogen Fuel Cell Technology

E-Bike Concept

SiGNa will integrate the reliable power generator into a complete system (Figure 2a) that powers a bicycle and potentially other devices. The system's structure will center on a power manager, which communicates with multiple devices that store, produce, and consume power.

Energy, in the form of sodium silicide, will be stored in the fuel canister, where the power will also be generated. Water from a small (1 liter) reservoir is supplied to the canister. This system can use water of any quality including potable water, polluted water, sea water, or even urine. Hydrogen generated from the reaction between the water and sodium silicide is fed to the fuel cell via a hydrogen control module. The fuel cell then provides energy to the power manager. Once maximum riding distance is reached (i.e., when the sodium silicide is spent) the user is left with a non-toxic by-product (sodium silicate) contained within the disposable or reusable canister. This by-product can be used as an industrial feedstock in multiple industries, such as concrete production, glass, toothpaste, etc. Sodium silicate is also classified as a non-hazardous solid waste under RCRA and can be readily disposed of in municipal waste.

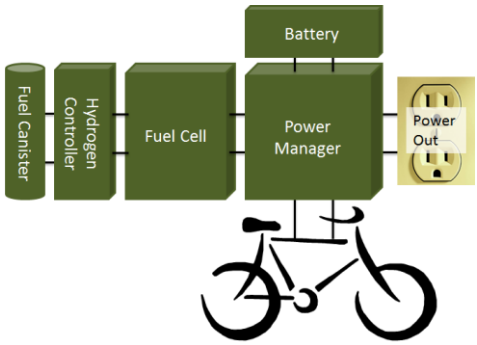

a. Proposed System Architecture

b. SiGNa's Experimental, Generation 0 Fuel Cell-Powered Bicycle.

Figure 2. Sodium Silicide and its use in a transportation application.

The E-Bike's power module will extend the range of electric bicycles from 20 to 100 miles at approximately the same weight. The range can be extended by a further 100 miles (160 km) for each additional sodium silicide cartridge (0.75 kg or 1.65 lb) carried on board with moderate pedaling. Because sodium silicide is solid and non-flammable, these cartridges are inherently safer than other storage alternatives. For instance, a comparable compressed hydrogen system stores flammable gas at 4,000 psi (276 bar) or greater.

SiGNa has fabricated a Generation 0 experimental bicycle to test various use modes (Figure 2b). This experimental system is more of a mobile chemistry laboratory than a prototype; however, this bike is a launching point to develop a fully-refined system and prototype for this USAID program.

Program Plan (Included for Reference)

SiGNa has completed the second month in a nine month program for the development of a prototype fuel cell electric bicycle. The program consists of three primary tasks: Design, Build, and Test. Major deliverables/milestones are associated with those tasks as follows: Design Review Package, Fabrication of First System, and a Final Report. The Final Report will document all elements of the program including final testing and verification.

Work Plan (Included for Reference)

To build the integrated E-Bike system, SiGNa will partner with its existing fuel cell supplier and an electric-drive bicycle manufacturer. SiGNa will integrate the individual parts to produce a prototype that can readily be demonstrated and tested by non-technical personnel.

Task 1. Design Integrated System – Systems specifications, concept development, and design

Task 2. Build Integrated System – Component procurement, assembly, and initial debugging

Task 3. Test Integrated System – System testing, system improvements, and final verification

Task 4. Reporting and Administration – Program management and reporting.

WORK PLAN (DETAILED)

Task 1. Design Integrated System (100% Complete)

Completed in prior months.

Task 2. Build Integrated System (90% Complete)

In initial testing of the system, the fuel cell exhaust air was aimed directly towards the canister to aid canister cooling. This resulted in excess heat build-up inside the bag system which caused fuel cell over-temperature errors during some tests. The fuel cell exhaust air is now being modified so it more directly exits the system which will be completed in month 8. After the preliminary build, a number of additional changes are being made. For example, the various balance of plant components are being moved to the opposite side of the system. This will provide an easy access port to both replace the cartridge and to refill water, and it will clear the exhaust path for the fuel cell. In addition, an auxuillary fan has been more appropriately positioned to bring air in and out of the system.

The electronics used for testing were an existing controller from a previous system and a hand-built board for testing the basic functionality of the power module. A custom circuit board integrating all functionality has been designed. Final build and assembly of this board is in progress and will be completed in month 8.

Figure 3. Preliminary Layout of Core Components

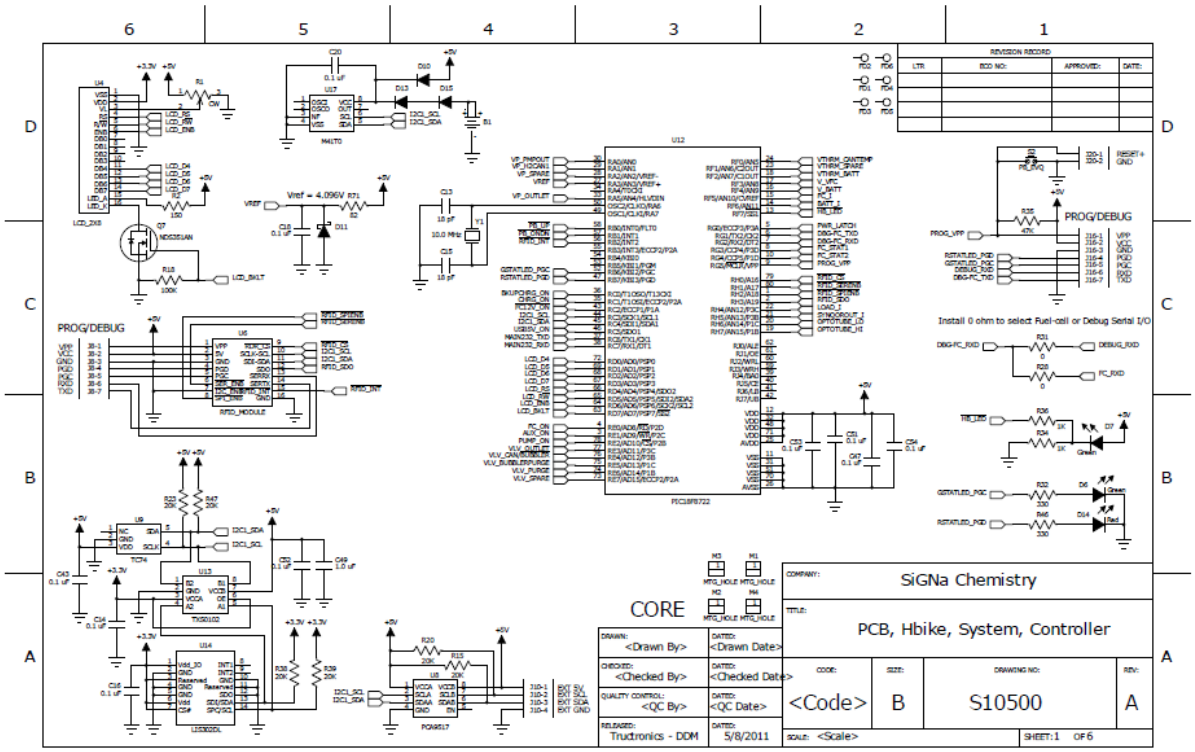

Figure 4. Custom Board Design

Task 3. Test Integrated System (30%)

A number of basic tests continued. These functionality tests have allowed for further tuning of the hybrid system. 200W of continuous power and over 300 W of peak power has been demonstrated, which is sufficient for a bicycle and numerous other applications.

An important test was a startup of the hydrogen generation system after a two hour soak at -10°C. A salt water mixture was used to avoid water freezing. The system started up instantaneously even under these very cold conditions. This is a critical test as most energy storage technologies have problems operating properly below freezing.

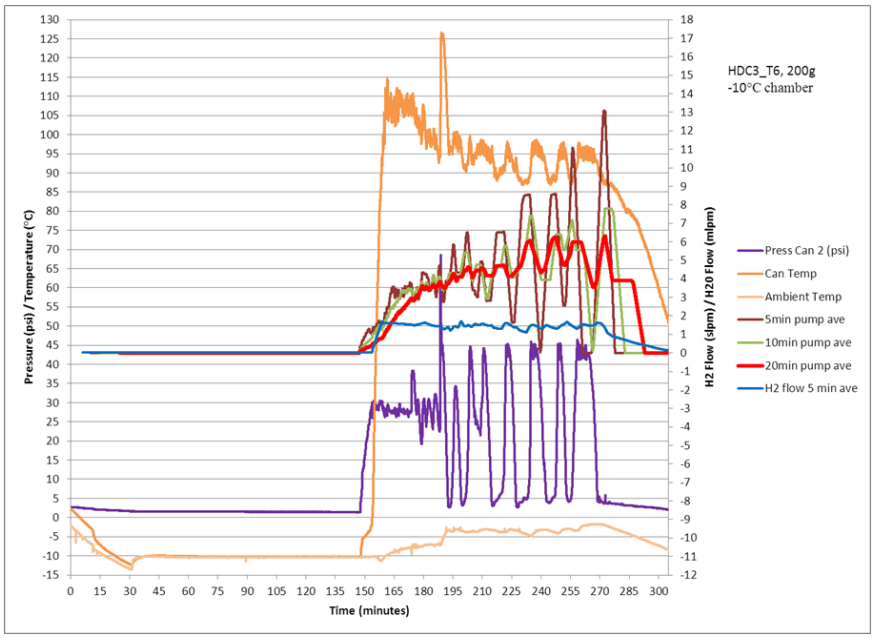

Data from Two Hour Soak and Operation at Low Temperature Operation (-10 °C)

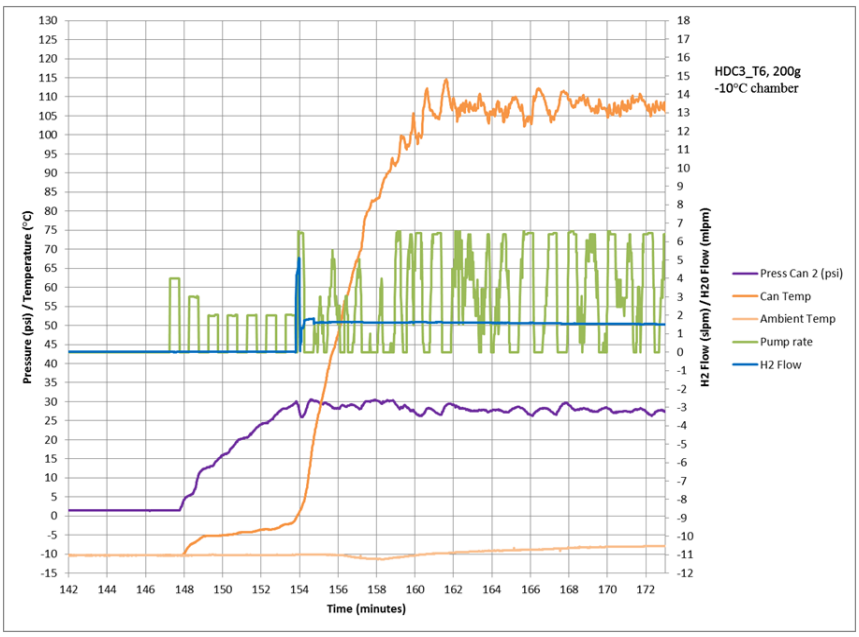

Start up After Two Hour Soak at -10 °C Operation

Figure 5. Two Hour Soak and Startup at -10 deg C

Task 4. Reporting and Administration (87% Complete)

This task accounts for program management and reporting to the USAID contracting office. Within each monthly report, we will summarize program activities as required. A final report will summarize all of Stage I program activities. This task also includes a kickoff meeting and any subsequent meetings needed to represent our work either in Davis, CA at the SiGNa Chemistry facility or at USAID in Washington, DC.

Table 1. Reporting Deliverables and Milestones

Reporting and Administration
Monthly Report 1
Monthly Report 2
Monthly Report 3
Monthly Report 4
Monthly Report 5
Monthly Report 6
Monthly Report 7
Monthly Report 8
Final Report
Milestones
Milestone 1. Design Review Package.
Milestone 2. First Assembly Completion.
Milestone 3. Delivery of Final Report.

The E-Bike: Practical, Scalable, Pollution-Free Mobile Transportation

Monthly Report 8

May 31, 2011

Awardee	SiGNa Chemistry Alternative Energy Division 720 Olive Drive, Suite C Davis, CA 95616 Grant# AID-OAA-G-10-00012
Primary Contact	Andrew P. Wallace Vice-President of Alternative Energy / Principal Investigator Phone: (530) 554-2217 Email: apwallace@signachem.com Website: www.signachem.com
Type of Business	Small, for-profit business
Other Funders	No other organizations are funding this work
Representative Signature	Andrew P. Wallace
Representative Title	Vice-President of Alternative Energy / Principal Investigator

The E-Bike: Practical, Scalable, Pollution-Free Mobile Transportation

Summary of Current Month Progress

In the eighth month of this program, significant progress towards a final demonstrable portable power system was made. The new microcontroller assembly was fabricated, assembled and tested with its firmware fully ported to the processor allowing for much tighter system integration and the correction of multiple subtle problems that existed with the laboratory testing circuit boards. In addition, the entire mechanical layout was reconfigured to enable a significantly smaller form factor. A decision was made to move back to the originally proposed detachable pannier system to allow for the system to be much more easily carried. The previous layout worked well when it was mounted on the bicycle, but did not function well as the general purpose distributable power system it is intended to be. Only minor usability adjustments and continued testing will be required in the final month of this program. All of the core science components have been repeatedly tested.

Figure 1. Complete Power System and Detachable Pannier

Figure 2. Power System and Pannier Shown Near and On (Respectively) an E-Bike

Technical Objective (included for reference)

Award Type: Stage 1

In this program, SiGNa Chemistry is developing the E-Bike, an affordable fuel cell-powered bicycle that provides both a clean, efficient mode of transportation and a portable, general purpose power source. The fuel cell power system will incorporate SiGNa's unique clean energy storage solution, which operates at one-sixth the cost, weight and volume of existing battery technologies. The prototype bicycle will be rugged, lightweight, and have a base range of up to 100 miles, which is 300% farther than the range achieved by equivalently-sized high-performance batteries. The portable power module will be designed for easy removal from the bicycle so that it can also be used as a stand-alone power source for non-transportation functions, like powering pumps, lights, cell phones, etc. The only emissions from the E-Bike will be water vapor and air, which is not the case with scooters powered by internal combustion engines (one of the highest emitters of green-house gases and air pollutants).

The technology in this program will dramatically improve the lives of tens of millions of people in developing countries. The E-Bike and its power module will have three primary uses: (1) as a long-range, pollution-free, powered transportation alternative, (2) as a general purpose mobile power source, and (3) as a transportation and power platform in emergency or disaster relief efforts. A key differentiator for this system is its portable power module, which is designed to operate independently from the electric bicycle. This technology will provide millions of people with access to a stable, general purpose mobile power source that can operate, for example, computers, cell phones, refrigerators, or water pumps. *As more than 1.45 billion people worldwide do not have access to electricity (IEA 2009), the scaling potential for this portable power system to improve lives is staggering.* This system will also be a valuable tool in emergency or disaster situations, where the portable power module could be used to power emergency response systems, medical refrigerators, and telecommunications repeater stations.

Countless socio-economic boundaries can be bridged using this system when this technology is developed to a point that it is viable for scaled manufacturing.

Method of Approach (Included For Reference)

In the proposed Stage 1 program, SiGNa Chemistry will design, build, and test a fuel cell-powered bicycle prototype for use in developing nations and areas in need of disaster relief. The prototype bicycle and power module will be demonstrated during in-house evaluations and, potentially, in limited field trials.

Fuel Cell Technology

Fuel cells convert chemical energy (typically hydrogen) into electrical energy at significantly higher efficiencies (50%) than internal combustion engines (12-13%). The fuel cell device has no moving parts; instead, it functions like a battery with anodic and cathodic reactions (**Figure 1**). The only inputs are hydrogen and air and the only emissions are water, air and DC power. Because there are no moving parts, fuel cell systems typically operate for thousands of hours before maintenance is required.

Despite the advantages of fuel cell power, it has not been widely adopted, primarily because the storage of gaseous hydrogen is problematic. SiGNa Chemistry has overcome this challenge by developing a process where solid sodium silicide (NaSi) reacts with any water to instantaneously produce clean hydrogen gas. This unique NaSi material has fast reaction times, low by-product solubility, and is safe to handle in air. SiGNa's technology generates hydrogen as needed at <30 psi. More conventional hydrogen storage using compressed gas tanks would require a pressure of over 4,000 psi to store an equivalent amount of hydrogen.

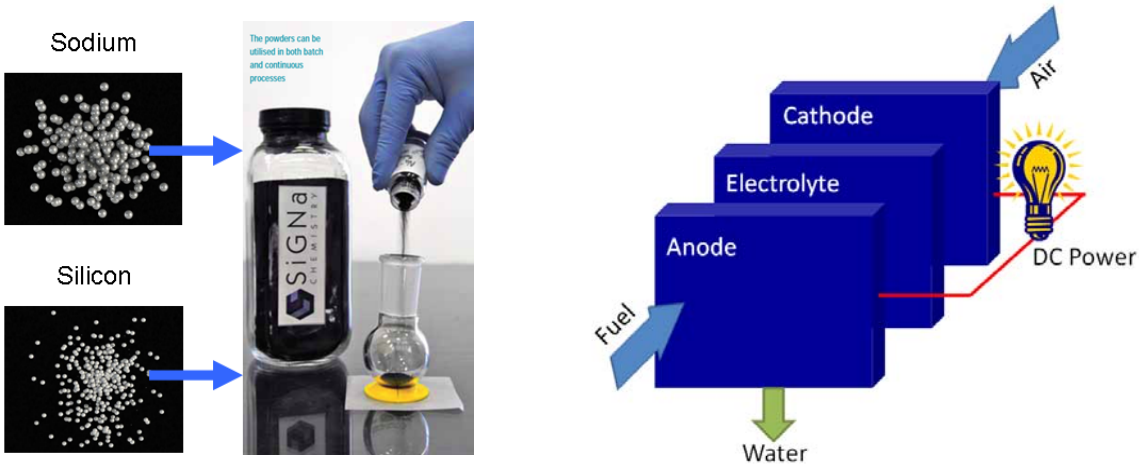

a. Sodium Silicide (NaSi) Reacts with Water to Form Hydrogen

b. Hydrogen is Used as a Fuel for Zero Pollutant Portable Power

Figure 3. Hydrogen Fuel Cell Technology

E-Bike Concept

SiGNa will integrate the reliable power generator into a complete system (**Figure 2a**) that powers a bicycle and potentially other devices. The system's structure will center on a power manager, which communicates with multiple devices that store, produce, and consume power.

Energy, in the form of sodium silicide, will be stored in the fuel canister, where the power will also be generated. Water from a small (1 liter) reservoir is supplied to the canister. This system can use water of any quality including potable water, polluted water, sea water, or even urine. Hydrogen generated from the reaction between the water and sodium silicide is fed to the fuel cell via a hydrogen control module. The fuel cell then provides energy to the power manager. Once maximum riding distance is reached (i.e., when the sodium silicide is spent) the user is left with a non-toxic by-product (sodium silicate) contained within the disposable or reusable canister. This by-product can be used as an industrial feedstock in multiple industries, such as concrete production, glass, toothpaste, etc. Sodium silicate is also classified as a non-hazardous solid waste under RCRA and can be readily disposed of in municipal waste.

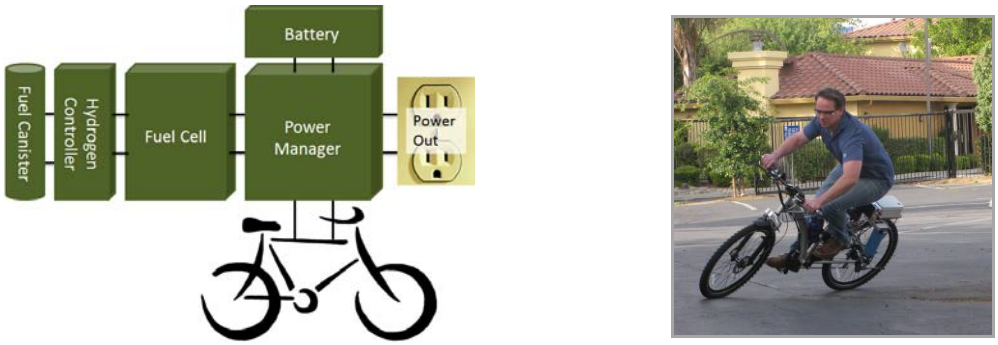

a. Proposed System Architecture

b. SiGNa's Experimental, Generation 0 Fuel Cell-Powered Bicycle.

Figure 4. Sodium Silicide and its use in a transportation application.

The E-Bike's power module will extend the range of electric bicycles from 20 to 100 miles at approximately the same weight. The range can be extended by a further 100 miles (160 km) for each additional sodium silicide cartridge (0.75 kg or 1.65 lb) carried on board with moderate pedaling. Because sodium silicide is solid and non-flammable, these cartridges are inherently safer than other storage alternatives. For instance, a comparable compressed hydrogen system stores flammable gas at 4,000 psi (276 bar) or greater.

SiGNa has fabricated a Generation 0 experimental bicycle to test various use modes (**Figure 2b**). This experimental system is more of a mobile chemistry laboratory than a prototype; however, this bike is a launching point to develop a fully-refined system and prototype for this USAID program.

Program Plan (Included for Reference)

SiGNa has completed the second month in a nine month program for the development of a prototype fuel cell electric bicycle. The program consists of three primary tasks: Design, Build, and Test. Major deliverables/milestones are associated with those tasks as follows: Design Review Package, Fabrication of First System, and a Final Report. The Final Report will document all elements of the program including final testing and verification.

Work Plan (Included for Reference)

To build the integrated E-Bike system, SiGNa will partner with its existing fuel cell supplier and an electric-drive bicycle manufacturer. SiGNa will integrate the individual parts to produce a prototype that can readily be demonstrated and tested by non-technical personnel.

Task 1. Design Integrated System – Systems specifications, concept development, and design

Task 2. Build Integrated System – Component procurement, assembly, and initial debugging

Task 3. Test Integrated System – System testing, system improvements, and final verification

Task 4. Reporting and Administration – Program management and reporting.

WORK PLAN (DETAILED)

Task 1. Design Integrated System (100% Complete)

Completed in prior months.

Task 2. Build Integrated System (100% Complete)

A re-design of all the electronics was completed this month. This was a significant activity that started in December. The two test boards that have been used for the majority of testing to date are shown on the left of **Figure 5**. The upper left board was a breadboard developed in this program to provide an adjustable power output voltage to make the system readily adaptable to applications that operate on different voltages (like 36 and 48 V bicycles). The power electronics and associated voltage regulation operate at a much higher efficiency (~95%) than previously tested hybrid electronics. This circuit board manages the power requirements of the application and matches it to a combination of the fuel cell and battery capabilities. For example, during rapid acceleration with the e-bike, the necessary power required to perform the operation comes from both the battery and fuel cell. However, when cruising at a set speed, the fuel cell provides the drive power and provides a small amount of recharging power to the battery. Lastly, when the se-bike is decelerating, or stopped, the fuel cell fully recharges the battery. The microcontroller board is used to run the LCD display and to manage the hydrogen system controls (pump, fan and valves).

Now, after this month's efforts, all of these functions are combined onto a single circuit board. Not only did this provide a more compact system integration, but it fixed a number of small issues that were present in the test boards. As an example, with the test boards, if the main battery was dead, there was no way to start the system and recharge the battery.

Six of these new circuit boards have been built and tested. They are significantly smaller and much less prone to other issues such as breaking wires due to high levels of vibration. Also, the smaller board was required to fit into the much tighter form factor described below.

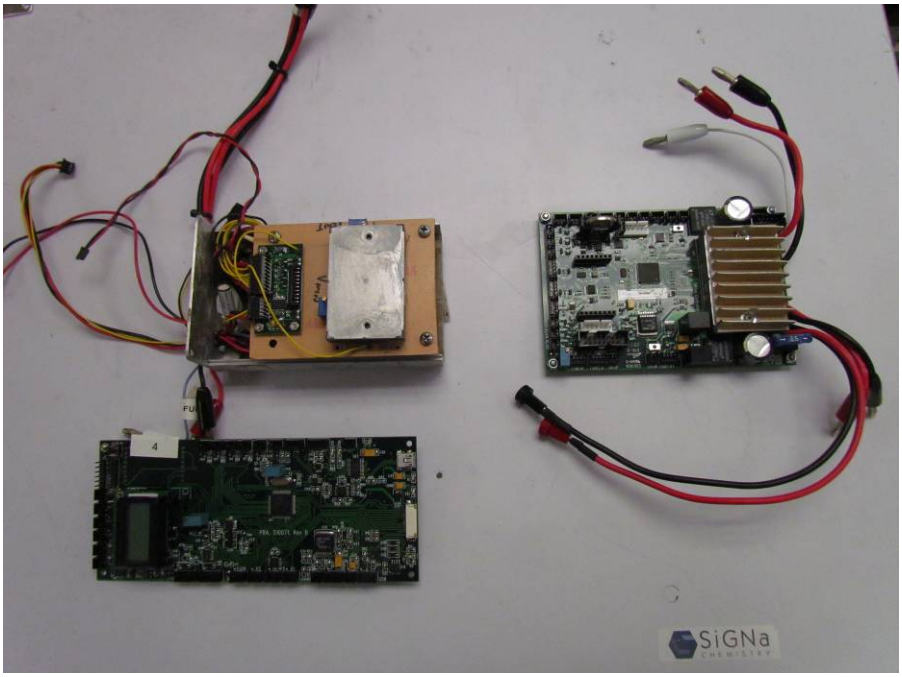

Figure 5. Power Breadboard and Test Controller (Left), Integrated USAID Microcontroller (Right)

An entire re-packaging activity of the system was completed this month in order to fit the system in a smaller, more portable pannier that was easier to carry. A new battery was found, tested, and integrated within the system as well. In addition, an interface panel was created that contains system control switches, an LCD display, a 110V socket, a 12V socket, and several USB connections. This interface panel will be mounted on the outside of the pannier to make it easily accessible for the end-user. The new fuel cell stack is at mounted at the bottom of the unit with the design bringing in air from one side of the pannier to provide both reactant air for the fuel cell and cooling air to both the fuel cell and hydrogen generator. The replaceable sodium silicide canister will exit the side of the pannier and is shown on the left of **Figure** .

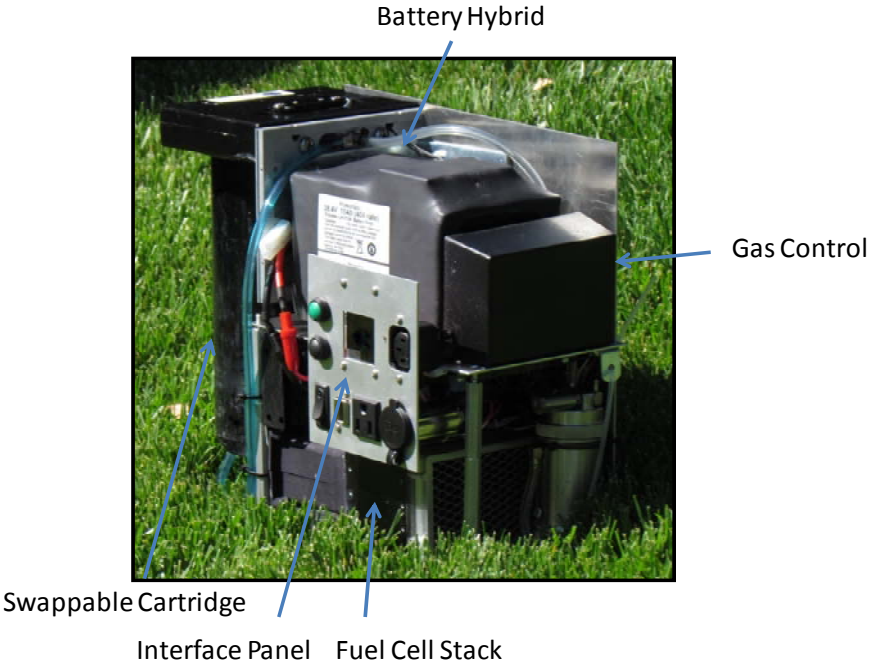

Figure 6. USAID Distributable Power System

Figure 7. Hydrogen Fuel Cell Sub-Assembly External of Removable Pannier

Figure 6. Power System and Pannier Shown Near/On E-Bike for Reference

Task 3. Test Integrated System (66%)

Daily tests continue to be performed on both the overall system and its individual components. A significant challenge was resolved this month relating to the filtration system. The system filters the outgoing hydrogen gas through the incoming water supply to condense any generated steam. During operation, a significant amount of this steam was coming through the filter system, however. While the fuel cell can handle steam, large amounts can flood the fuel cell over time and decrease operation and performance. In the more tightly integrated package, the filtration system was too close to both the fuel cell and the hydrogen canister, which both produce significant local heat inside the system, which lead to a decrease in its effectiveness. The filtration system was

now moved to the front of the system and directly exposed to the input cooling air to enable optimum performance.

The new microcontroller board was also tested with the system. A number of changes to the firmware were required as this uses a different microcontroller than the previous test hardware. The microcontroller was from the same chip family, but it had additional features incorporated, such as more control inputs and outputs as well as more memory. All of these changes were implemented.

There are a number of other small adjustments that will be made in the final month. The pannier system will be modified to provide an access door for the cartridge, mounting for the interface board, and an input vent for the fuel cell and cooling air. In addition, with the new battery selected, there is no off-switch like the key switch on the previous batteries used that are more customized for an electric bicycle. This means that the battery is always connected to the system and would drain down over-time even when not in use. A small control switch and relay will be added to allow the user to completely turn off the system / battery. There are a number of other fine firmware adjustments to be performed, but these are all minor. At this point, all core science and product objectives can be readily demonstrated within the next month.

Task 4. Reporting and Administration (89% Complete)

In the next month, a Phase II report and the Phase I Final Report will be completed. The system is expected to be ready for a demonstration in the near future once schedules are coordinated for all parties.

Table 1. Reporting Deliverables and Milestones

Reporting and Administration
Monthly Report 1
Monthly Report 2
Monthly Report 3
Monthly Report 4
Monthly Report 5
Monthly Report 6
Monthly Report 7
Monthly Report 8
Final Report
Milestones
Milestone 1. Design Review Package.
Milestone 2. First Assembly Completion.
Milestone 3. Delivery of Final Report.

The E-Bike: Practical, Scalable, Pollution-Free Mobile Transportation

Demonstration of Grid-Free, Distributed Portable Power

FINAL REPORT

Work Ending: June 30, 2011
Final Report Submitted: July 11, 2011

Awardee	SiGNa Chemistry Alternative Energy Division 720 Olive Drive, Suite C Davis, CA 95616 Grant# AID-OAA-G-10-00012
Primary Contact	Andrew P. Wallace Vice-President of Alternative Energy / Principal Investigator Phone: (530) 554-2217 Email: apwallace@signachem.com Website: www.signachem.com
Type of Business	Small, for-profit business
Other Funders	No other organizations are funding this work
Representative Signature	Andrew P. Wallace
Representative Title	Vice-President of Alternative Energy / Principal Investigator

Table of Contents

Executive Summary **1**
Technical Objectives and Results **2**
Stage 1 Technical Program **2**
Task 1. Design Integrated System 3
Task 2. Build Integrated System 8
Task 3. Test Integrated System 15
Task 4. Reporting and Administration 21
Market Need and Competition **21**
Market Need 21
Market Opportunities and Pricing 22
Competitive Analysis: Existing Alternatives 23
Competition: Next Generation Technologies 26
Business Plan Overview 28
Appendix—Stage 2 Full Proposal **31**

EXECUTIVE SUMMARY

Access to an electrical power source is needed to operate all of the electronic devices that have become an important part of a healthy and productive life. Yet 1.4 billion people worldwide live without access to electricity. In USAID program #AID-OAA-G-10-00012, SiGNa Chemistry developed a distributable power system that can be used as a portable source of power for a wide range of applications including: electronics, refrigerators, computers, phones, water filters/pumps, lighting, mobility and more. This portable hydrogen fuel cell power system provides up to 300 W of power for 4-5 hours for each fuel cartridge used; it also operates at a fraction of the weight and cost of existing batteries or gas generators. The Distributable Power System 300 (DPS300) demonstrated in this program (Figure 1) is a clean and sustainable source of energy and has the potential to dramatically improve millions of lives in developing countries and regions affected by natural disaster.

In a 9-month technical program, two prototype power systems were developed and subjected to more than 250 hours of testing, including the operation of an electric bicycle and a UV water filtration system. The DPS300 system utilizes SiGNa's patented energy storage technology (sodium silicide) to fuel a proton exchange membrane (PEM) fuel cell to create electricity. The fuel cell, which functions like a battery with anodic and cathodic reactions, operates at much higher energy density and efficiency than both batteries and gas generators. The hydrogen is generated at low pressures (about one half of the pressure found in a soda can) and as needed by the fuel cell, thus providing a reliable source of electric power whenever and wherever a user requires it.

To give a practical example of the effectiveness of this fuel cell generator in the field, only one fuel cartridge (about 0.75 kg / 1.5 lbs) will generate enough energy to:

- Filter 6,220 liters of water (enough to support 1,640 people for one day).
- Fully charge approximately 1,500 cell phones.
- Cool medicines/vaccines for 43 hours (when the DPS300 generator is coupled to a refrigerator).
- Extend the range of traditional lithium ion batteries from 20 to 80 miles (when the generator is coupled to an electric bicycle).

The following technical report summarizes the design, fabrication, and testing of the DPS300 power system.

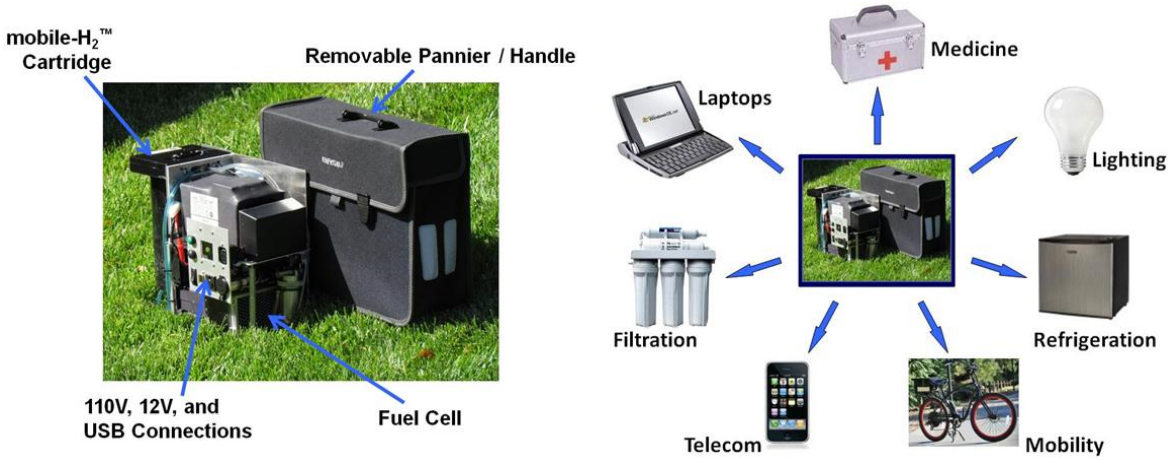

Figure 1. The Stage 1 distributed power system and anticipated uses in developing regions.

TECHNICAL OBJECTIVES AND RESULTS

The objective of SiGNa's Stage 1 program was to demonstrate a distributable power system that uses a hydrogen fuel cell sub-system that is powered by sodium silicide. This system was intended to be used both as a power source for eBikes and as a general power system that could be used in areas without access to reliable grid power. SiGNa Chemistry successfully met and ultimately exceeded the established program goals.

During the 9-month program, SiGNa designed, built, and tested a distributable fuel cell power system on both in-house test stands, an electric bicycle, and with a UV water filtration system. The resulting prototype integrates a fuel cell with a sodium silicide hydrogen storage system to create a portable, reliable power system that can power electric bicycles (Figure 2) and any other electronic device (<300 W) shown in Figure 1. The system centers around a power manager that communicates with multiple devices that store, produce, and consume power (Figure 2a). For initial demonstrations, the system was integrated with an electric bicycle; the eBike prototype demonstrated more than three times the range of existing high-capacity lithium polymer batteries. Following successful demonstration of the eBike power system, the system's functionally was expanded for use as a general purpose power system.

The result is the Distributable Power System 300 (DPS300), a power system that incorporates a fuel cell, a low-pressure hydrogen source (i.e., sodium silicide), and all of the control and power components. The fuel cell power system uses SiGNa's unique clean energy storage solution, which enables high-density power at one-sixth the cost, weight and volume of existing battery technologies. The DPS300 was designed for easy removal from the bicycle so that it can also be used as a stand-alone power source for non-transportation functions, like water pumps, lights, cell phones, refrigerators, etc. The only emissions from the system are water vapor and air. The complete system is a lightweight, comparatively low-cost power solution that is well suited for a variety of portable and remote applications. In addition, the system architecture developed in the Stage 1 program allows for straightforward use of complementary components, such as solar panels or pedal based rechargers, and it provides a platform to improve fuel cell stack and/or hydrogen generation technology.

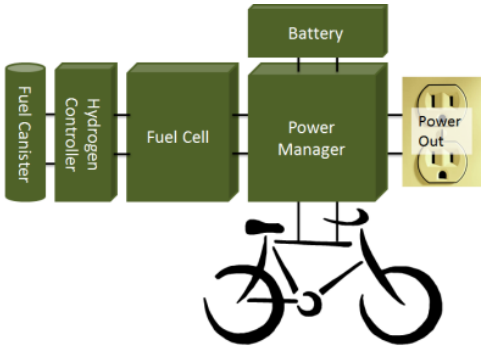

a. Proposed System Architecture

b. Fuel Cell Demonstration Bicycle

Figure 2. Sodium Silicide and its use in a transportation application.

STAGE 1 TECHNICAL PROGRAM

SiGNa completed a 9-month technical program to develop the prototype electric bicycle and power system. The program included three technical tasks and associated milestones/deliverables (Figure 3). To build the integrated system, SiGNa partnered with its fuel cell supplier (Jadoo Power) and an electric-drive bicycle manufacturer. SiGNa integrated the individual parts to produce a prototype that can readily be demonstrated and tested by non-technical personnel for transportation, cold chain management and disaster relief purposes.

Name	Duration	Start	Finish	Pre...
Stage I	**195 days**	**10/1/10 8:00 AM**	**6/30/11 5:00 PM**	
Design Integrated System	66 days	10/1/10 8:00 AM	12/31/10 5:00 PM	
Build Integrated System	64 days	1/3/11 8:00 AM	3/31/11 5:00 PM	2
Test Integrated System	65 days	4/1/11 8:00 AM	6/30/11 5:00 PM	3
Reporting and Administration	195 days	10/1/10 8:00 AM	6/30/11 5:00 PM	
Reporting and Administration	**195 days**	**10/1/10 8:00 AM**	**6/30/11 5:00 PM**	
Monthly Report 1	21 days	10/1/10 8:00 AM	10/29/10 5:00 PM	
Monthly Report 2	22 days	11/1/10 8:00 AM	11/30/10 5:00 PM	7
Monthly Report 3	23 days	12/1/10 8:00 AM	12/31/10 5:00 PM	8
Monthly Report 4	21 days	1/3/11 8:00 AM	1/31/11 5:00 PM	9
Monthly Report 5	20 days	2/1/11 8:00 AM	2/28/11 5:00 PM	10
Monthly Report 6	23 days	3/1/11 8:00 AM	3/31/11 5:00 PM	11
Monthly Report 7	21 days	4/1/11 8:00 AM	4/29/11 5:00 PM	12
Monthly Report 8	22 days	5/2/11 8:00 AM	5/31/11 5:00 PM	13
Final Report	22 days	6/1/11 8:00 AM	6/30/11 5:00 PM	14
Milestones	**195 days**	**10/1/10 8:00 AM**	**6/30/11 5:00 PM**	**1SS**
Milestone 1. Design Review Package.	66 days	10/1/10 8:00 AM	12/31/10 5:00 PM	
Milestone 2. First Assembly Completion.	64 days	1/3/11 8:00 AM	3/31/11 5:00 PM	17
Milestone 3. Delivery of Final Report.	65 days	4/1/11 8:00 AM	6/30/11 5:00 PM	18

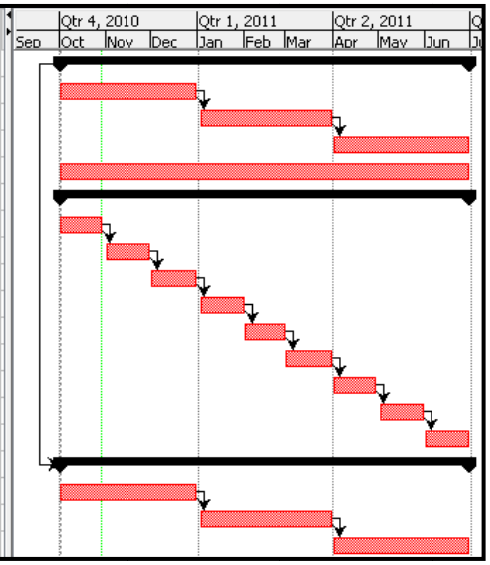

Figure 3. Program schedule and milestone.

Task 1. Design Integrated System

Task Description

During Task 1, SiGNa developed the preliminary specifications that were used to design the electric bicycle and fuel cell power system. These preliminary specifications included operating power, capacity, and user interface requirements. The specifications (Table 2) were updated and modified throughout the program in preparation for a Stage 2 program and as additional information was obtained from customers, distributors, suppliers, and USAID representatives.

Task Results

The Stage 1 program focused on the demonstration of the most technical elements of the power system, notably the fuel cell/sodium silicide components. Research was performed on commercially-available electric bicycle models to ensure the developed power system would be able to sufficiently power and connect with a range of bicycles. Task 1 also included the design of the power system. The Task 1 work is discussed more fully below.

1. Bicycle Type and Design

During Task 1, SiGNa collected and integrated information from several bicycle manufacturers to determine available eBike options. A wide variety of electric bicycle designs and approaches are available; the leading designs are summarized in Table 1.

Table 1. Bicycle Options

Component/Style	Options	Advantages / Disadvantages / Description
Motor	▪ Wheel Hub Motor	▪ Low cost. Readily adaptable to bicycles.
	▪ Gear Driven Motor	▪ Easy to generate combined electric and pedal powder for high speed operation.
Battery	▪ Rack Mounted	▪ Low cost. Easy to replace.
	▪ Frame Integral	▪ Good use of overall volume. Even weight distribution with low center of gravity.
Cargo Location	▪ Rear - Custom Bike	▪ Balanced ride. Low total cost for new purchases.
	▪ Rear - Bike Extension	▪ Retrofits many existing bicycles.
	▪ Front loader	▪ Able to carry large loads. Rider can observe carried items. Difficult to pilot over rough terrain.
Cargo Options	▪ Load Capacity	▪ Carrying capacity increases weight and cost.

Table 1. Bicycle Options

Component/Style	Options	Advantages / Disadvantages / Description
	▪ Passenger Capable	▪ Requires additional weight and cost. Likely higher overall safety as bikes are likely used to carry passengers whether designed to do so or not.
Frame Type	▪ Straight Bar	▪ Traditionally used in the US and many parts of the world.
	▪ Step-through	▪ Modern materials and design may make it appropriate for a wider range of rider weights and heights.
Transport	▪ Traditional	▪ Traditional bikes may be transported on special car racks and in the back of trucks
	▪ Folding	▪ Folding bikes take up little volume when stored or transported; these bikes are also heavy, expensive and often compromise performance for transport ease.

After completing its research, SiGNa chose to develop a flexible power system where the core technology (i.e., the removable fuel cell power system) could be readily used with a variety of custom and retro-fitted eBikes and for a portable power system. The bicycle specifications used, shown in Table 2, were refined throughout Stage 1.

While many bicycle options are available, the cargo bicycle is believed to have a very high level of overall utility and as a result was selected as a demonstration vehicle. At some point, however, a higher-cost folding bicycle may be desired due to the ease of transport for emergency response situations. The developed portable power system was demonstrated (as discussed in Task 3) on both a cargo-style bicycle and a standard electric bicycle with the focus on overall utility of the portable pannier system for other applications.

Table 2. H-Bike Specifications

Characteristic	Description or Value	Demonstration Period
Type	Cargo	Stage I
Carrying Capacity	>200 lb (90 kg)	Stage I
Frame Type	Step-Through	
Electric Motor Power	>300 W	Stage I
Braking	Regenerative for battery recharging	
Electric Motor Generator	May be used for pedal based battery recharging or power output	
Throttle Type	Throttle only & pedal assist	
Max Speed with Electric Assist	20 mph (32 kph)	Stage I
Kickstand	Capable of holding bicycle weight + 250 lb, allows for rider to pedal while stationary for battery recharging	
Tires	Minimum of heavy duty puncture resistance. Foam core tires are possible.	
Battery	Lithium-Polymer, 10 Ah	Stage I
Cargo Racks	Quick release panniers and room for at least one passenger	

To provide propulsion, a 500 W integrated motor (Figure 4) was purchased and integrated into an Ultracycle Cargo Bike (Figure 5). These motor kits, which cost approximately $115, include a replacement wheel, electric

motor, motor control and throttle cables. These kits allow for the conversion of nearly any standard bicycle to any electric or pedal power bicycle. With higher quantities, lower costs are possible.

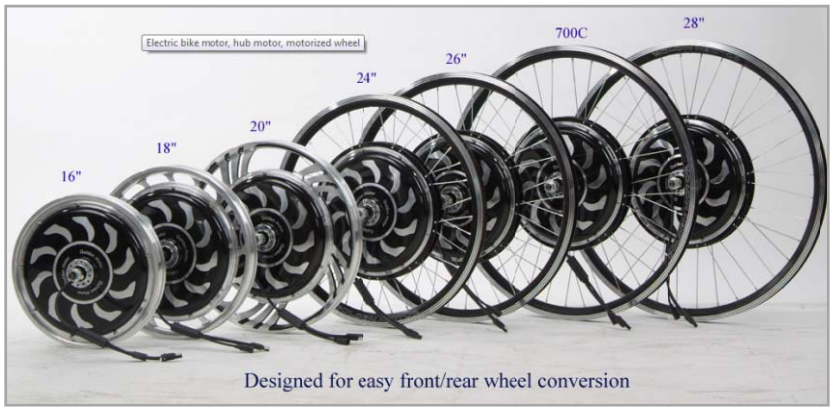

Figure 4. Image of Electric Bicycle Hub Motors

Figure 5. Xtracycle Cargo Bicycle Example Operated by DPS300

2. Distributable Power System Architecture

As described and shown above, a removable pannier was designed to house the fuel cell and power system. A pannier system was selected because it can be used to power various portable applications, such as water filtration, or it can be attached to an eBike for transportation. In the first design, the battery resided in one compartment, while the fuel cell and fuel canisters werein the other (Figure 6 and Figure 7). Because the largest system masses are placed on either side of the center of gravity, the bike remains more stable.

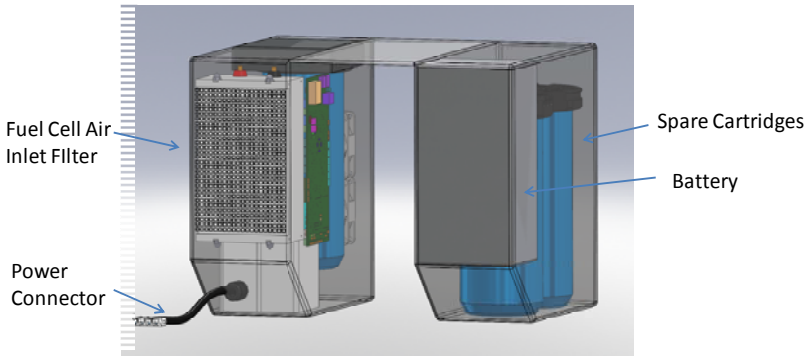

Figure 6. Schematic of Implemented Hybrid Fuel Cell System

Figure 7.Example Bicycle Panniers to House Power System.

As shown above, the power system was divided into two parts:

- **Pannier 1** houses the hydrogen generation balance of plant (HGen BOP) and fuel canister
- **Pannier 2** houses the power manager, battery and fuel cell

The two sides are connected by power cables and a hydrogen line.

Figure 8 shows the process and instrumentation diagram for the prototype power system. Some of the valves and sensors are used primarily for these early systems to facilitate testing and development and will be eliminated in a production-level system. Every effort was made to use low cost components consistent with the application needs. Also, in future generations, the HGen Controller may be integrated into the fuel cell controller, thereby eliminating components and decreasing the number of inter-pannier connections.

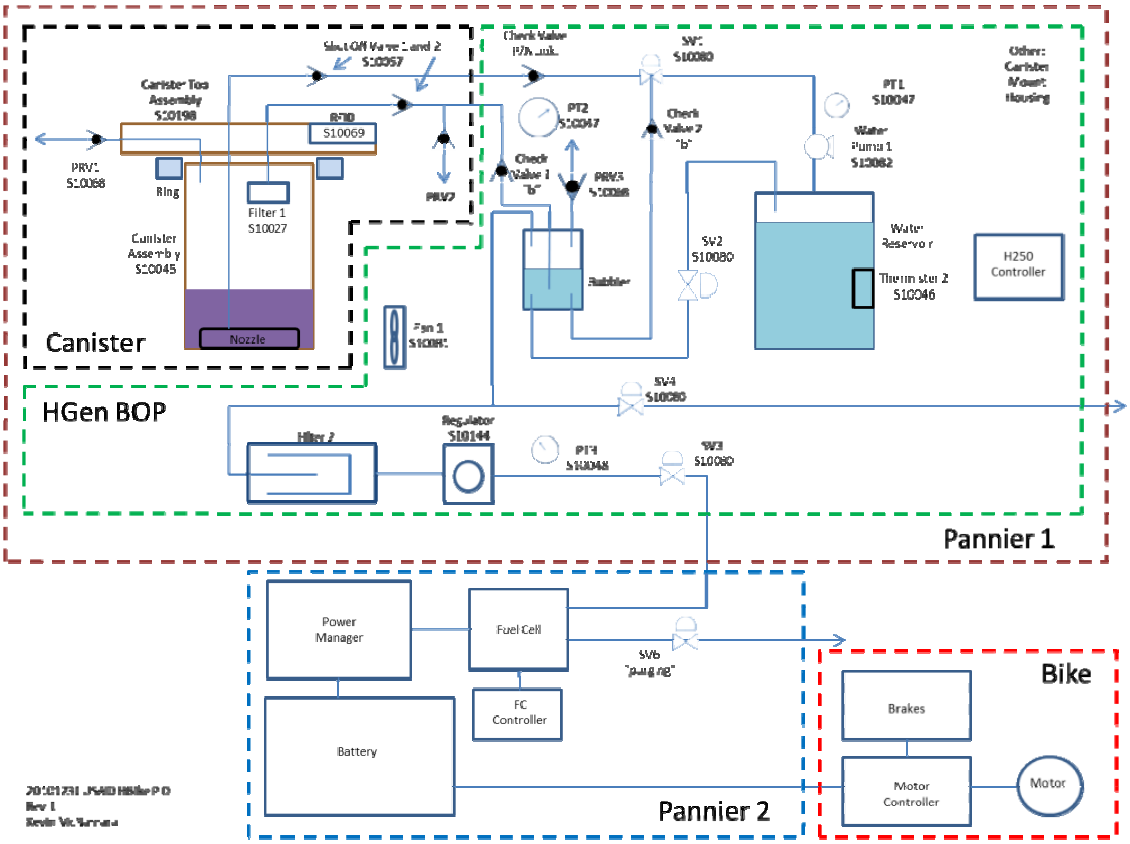

Figure 8. Process and instrumentation diagram of H-Bike system.

3. Power System Concept and Layout

The power system prototype was designed to be a safe, ruggedized, user-friendly transportation alternative. The power module was also designed to be easily and rapidly removable by the user to facilitate use as a portable power base station. To facilitate this, the power system includes a USB output for low power recharging applications (like cell phones). The power system specifications were refined throughout the program (Table 3).

Table 3. Fuel Cell Power System Specifications

Characteristic	Description or Value	Demo. Period
Fuel Cell Power	>200 W Continuous	Stage1
Hybrid Power System	Battery Recharge or Fuel Cell Only Modes	Stage1
Regenerative Input	Ability to receive and distribute power from electric motor	
Auxiliary Power Outputs	36 or 24 V, 12 V, USB	Stage1
Self-Start	Fuel cell has ability to start at full power without an external battery	Stage1
Output Display	Health monitoring of system and key usage characteristics	Stage1

Table 3. Fuel Cell Power System Specifications

Characteristic	Description or Value	Demo. Period
Energy Storage	>400 Wh Per Cartridge	Stage1
Cartridge Connection	Easy connection	Stage1
Cartridge Storage	Room for at least four fuel cartridges in panniers	Stage1
Max Cartridge Weight	2.2 lb (1.0 kg)	Stage1
Water Type	Any available	Stage1
Filter	Cleanable Dust Filter	
Transport	Easily removable system capable of bike independent operation	Stage1

A Failure Modes Engineering Analysis and a Hazardous Operation analysis were performed on the complete system to identify safety issues before the design was finalized. SiGNa also fabricated and tested a power converter circuit, which contained controllable output powers and voltages to properly control the battery and fuel cell hybrid system. Finally, this circuit board was updated as part of the final delivery system.

There are a number of AC (alternating current) and DC (direct current) voltages used throughout the world. Instead of accommodating them individually with independent voltage regulation, the eBike was designed to operate at a variety of voltages such as 5 VDC, 12 VDC, 24 VDC, 36 VDC, 48 VDC, and 110 VAC. The standard consumer voltage connections of 5 VDC, 12 VDC, and 110 VAC are always available. For the higher DC voltage required by eBikes, or often some industrial or telecommunications equipment, the system is designed to be configured to support 24, 36, or 48 VDC with modest user intervention. However, all testing to date has been on 36 V platforms.

4. Secondary Demonstration Application—Water Filtration

In months 4 and 7 of this program, SiGNa met with USAID representatives to assist with the identification of the initial market that is appropriate for this technology. As mentioned, the DPS300 is designed to be fundamentally a general purpose power plant supporting a range of applications including: cold chain management and water filtration. For comparison, the water filtration unit shown in Figure 9 filters 1.0 gallon / minute (3.8 liters / minute) and requires less than 45 W of continous power. Using this system, each SiGNa 1.4 liter NaSi fuel cartridge could filter approximately 3,800 liters (1,000 gallons) of water for drinking. The case of the shown system was removed for testing.

Figure 9. Example of aneasily portable water filtration system.

Task 2. Build Integrated System

Task Description

The designs produced in Task 1 were used to guide the construction work in Task 2. SiGNa performed most of the assembly work in-house. The components were sourced from commercial vendors and fabrication shops in the Sacramento, California area. SiGNa strove to source most of the parts from "commercial, off-the-shelf" sources whenever possible, decreasing costs and lead time.

SiGNa's mechanical engineers and technicians assembled the individual subsystems and ensured functionality. The subsystems were then integrated to complete the eBike and portable power station. Initial safety testing followed this work. First, a thorough check of the safety systems, such as over-temperature and speed limiting controls, was performed. Certain critical individual components, such as pressure relief valves, were tested. Finally, the operational boundaries of the bike were determined through systematic investigation.

At the end of Task 2, SiGNa demonstrated the eBike and portable power station—a major Stage 1 milestone.

Task Results

1. Electronics

Jadoo Power produced two fuel cell stacks for the program (Figure 10). The fuel cell stack used in this program is approximately one-half the size of the stack used from a previous vendor. The stack was verified to output approximately 220 watts of power (180 watts is required for normal no-pedal operation of an eBike). Some minor electrical modifications were required in SiGNa's controller to properly communicate with the fuel cell. Specifically, the fuel cell stack has specific start-up/shut-down instruction requirements, which were implemented in SiGNa's electronics. All core operational characteristics were verified under nominal conditions.

A new power control module chip was utilized in this system, which will facilitate a selectable output of 12 VDC, 24 VDC, 36 VDC, or 48 VDC in follow-on stages with minimal additional development. This will allow the use of the developed system for a wide range of eBikes and other equipment.

Figure 10. Fuel Cell Stack

The two test boards used for the majority of testing to date are shown on the left in Figure 11. The upper left board was a breadboard developed in this program to provide an adjustable power output voltage to make the system readily adaptable to applications that operate on different voltages (such as 36 VDC and 48 VDC bicycles). The power electronics and associated voltage regulation operate at a much higher efficiency (~95%) than previously-tested hybrid electronics. This circuit board manages the power requirements of the application and matches it to a combination of fuel cell and battery capabilities. For example:

- during rapid acceleration of the eBike, the power needed to perform the operation comes from both the battery and fuel cell.
- when cruising at a set speed, the fuel cell provides the drive power and a small amount of recharging power to the battery.

- when the eBike is decelerating, or stopped, the fuel cell fully recharges the battery. The microcontroller board is used to run the LCD display and to manage the hydrogen system controls (pump, fan and valves).

Figure 11. Breadboard power and test controller (Left), integrated USAID microcontroller (Right)

Each of these functions was combined onto a single circuit board (Figure 12). Not only did this enable a more compact system integration, but it resolved a number of small issues that were present in the test boards. As an example, with the test boards, if the main battery was dead, there was no way to start the system and recharge the battery. The final board can use the fuel cell to boot-strap the battery during start up.

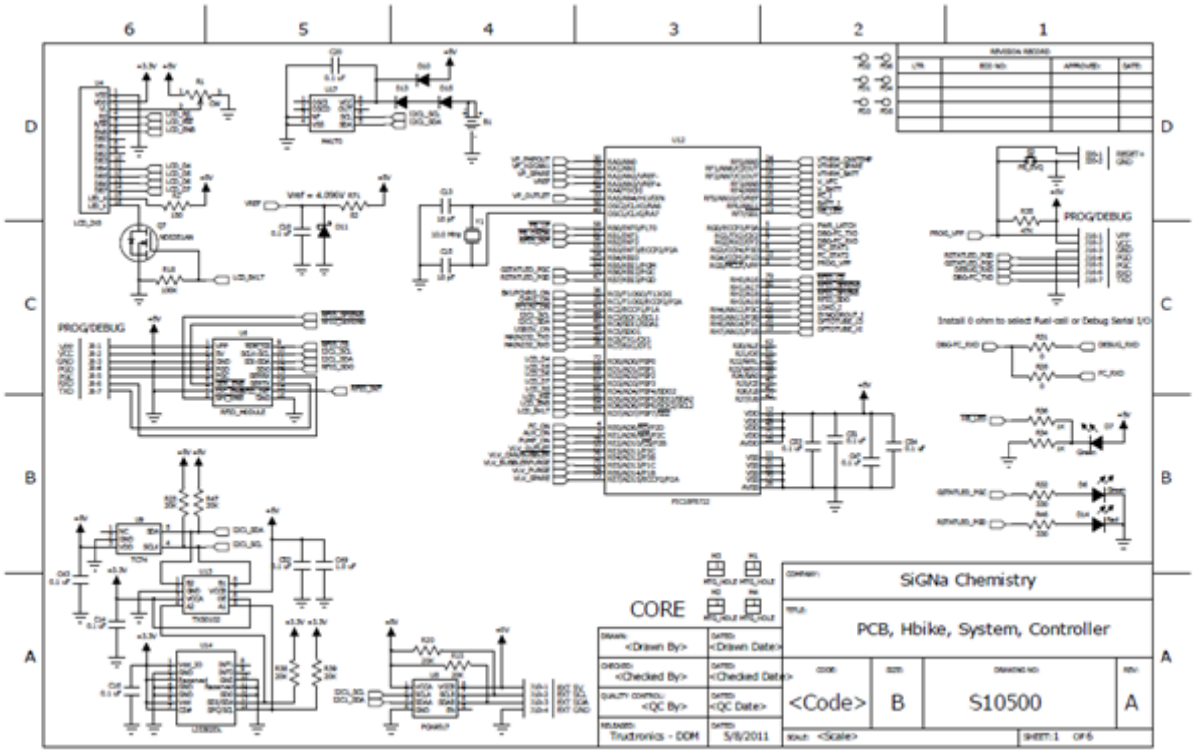

Figure 12. Custom Board Design

Six of these new circuit boards (Figure 11) were built and tested. They are significantly smaller and much less prone to other issues, such as breaking wires due to high levels of vibration. The new microcontroller board was also tested with the system requiring a number of changes to the firmware. The microcontroller was from the same chip family, but it had additional features incorporated, including more control inputs and outputs and more memory. In addition, with the new battery selected, there is no off-switch readily available to the user. This means that the battery is always connected to the system and would have drained down over time, even when not in use. A small control switch and relay were added to allow the user to completely turn off the system/battery, thus eliminating this issue.

2. Control Development

Figure 13 shows an example of the control parameters that are being varied and the resulting pressure fluctuations in the system. In addition to the reaction controller, a state-of-charge control algorithm was used to balance the fuel cell capability with the battery state of charge, while meeting the bicycle load requirements (Figure 14). In addition to tuning, the software has been re-configured for the various operation modes.

The existing prototype bicycle underwent daily rides to test and refine the various software control parameters. SiGNa tested the system on the road and in a laboratory environment; seven test runs were performed totaling 131 miles of bike operation. Variations of the test components were received that provided for improved operation, such as electronics (new controller boards) and mechanical parts (hydrogen filters).

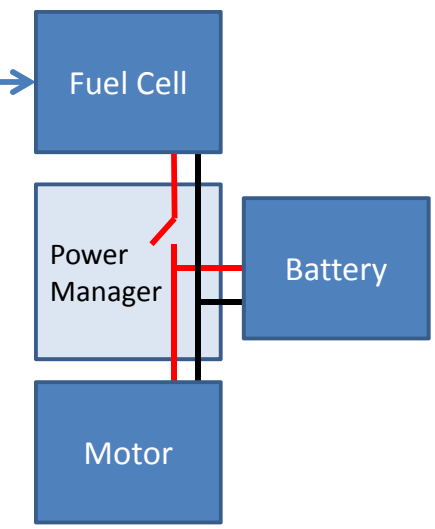

Battery Voltage Level	Meaning	Use
V_{max}	Max safety voltage	Battery Safety
V_{hi}	High Charging voltage	Charging
V_{low}	Low Charging Voltage	Charging
V_{min}	Min Safety Voltage	Battery Safety

Figure 13. Hybrid power system and battery charging states

State	H2 Gen State	FC State	Battery Circuit	Battery Voltage (V)
Ready Mode	On – Idle	Off	Disconnect	$>V_{hi}$
Start up mode	Start Up	Off/On	Disconnect /On	$<V_{low}$
Run Mode	Run	On	On	$<V_{hi}$
Stop Mode	Stop	Off	Disconnect	N/A

Figure 14. Modes of operation and control parameters

HDC1_T6: 200g, p=1, i=0.001, d=80, gain scaler = 1, distance = 18.98 miles

Total Hydrogen (SL) 175.2
Fuel Cell (SL) 140.794
FC Purge (SL) 15.0658
Start and OVP Purge (SL) 34.5162
Conversion 160%
Run Time (min) 121.633
Total FC Energy (Wh) 182.724
Energy LHV (Wh) 418.107
FC Effic 43.7%
Tot Load Energy (Wh) 233.655
Tot Batt Energy (Wh) 50.9308

Psi	Current Limit	FC Current(A)	H2 Flow(slpm)
P < 20	1	0.85	0.45
20 < P < 25	3	3.67	1.3
25 < P < 35	3.7	4.95	1.75
35 < P	3.9	5.4	1.95

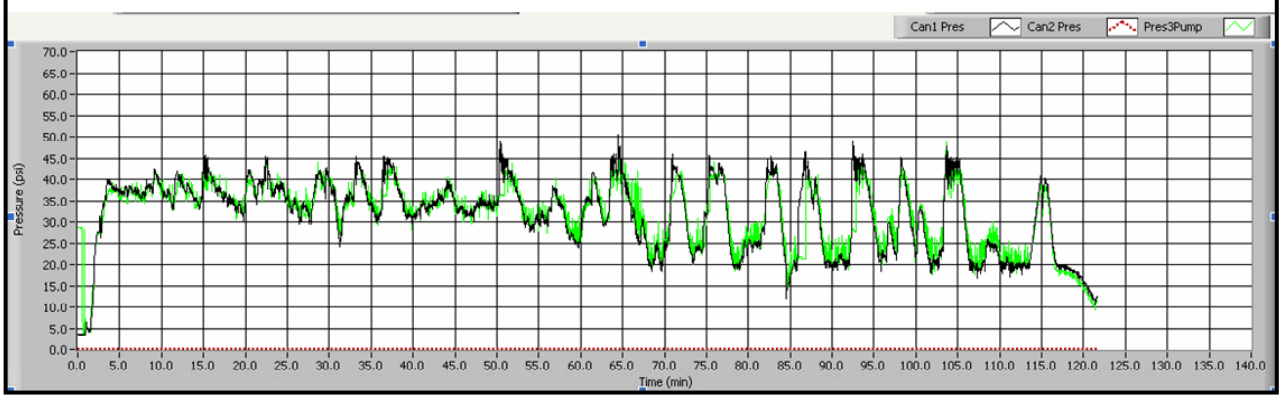

Figure 15. Control parameters and resulting pressure variability example

Table 4.Initial Cartridge Control Testing Summary

Date	Serial #	NaSi(g)	Test Setup/Notes	Total H2 gen L
2/2/11	HDC1_T6	200	p=1, i=0.001, d=80, gain scaler =1, auto CL control based on pressure	175.3
2/11/11	HDC1_T7	250	p=1, d=80, auto CL control	261.26
2/14/11	HDC2_T8	300	p=1, d=80, auto CL control	326.19
2/15/11	RBC5_T11	50	p=1,d=80, auto CL control	48.72
2/16/11	HDC1_T8	100	p=1, d=80, auto CL control	96.46
2/18/11	HDC1_T9	350	p=1, d=80, mfc = 2slpm(100 mins); 1slpm(final 300mins)	373.54
2/21/11	HDC2_T9/10	350	p=1, d=80, mfc = 1.3slpm	375.68
2/24/11	HDC1_T10/11	350	swapped out bad pump. P=1, d=40, F140, mfc=1.2	397.8
2/25/11	HDC2_T11	350	p=1,d=40, F130, mfc=1.2	396.77

3. System 1: Dual Pannier

A significant focus of this task was installing the various components and sub-systems into the removable panniers. The initial system was named Pannier System 1. A method to quickly stabilize the components, such as foam or other easily formed supports, was developed for this system.

The fuel cell stack and hydrogen canister sub-assembly were mounted on a thin aluminum L-bracket to facilitate mounting of the various components outside the bag system (Figure 16). The entire sub-system was then placed inside the bag. Mechanical ducts were used to route the fuel cell air underneath this storage space.In the final configuration, open space for storage above the fuel cell volume will be available.

Figure 16. Preliminary layout of core components

The initially selected bag had more than sufficient room to house all components. A significant storage compartment was available on the right-side of the opening in the photo below (Figure 17). The bag still required modifications to readily remove the canister in and out of the bag.

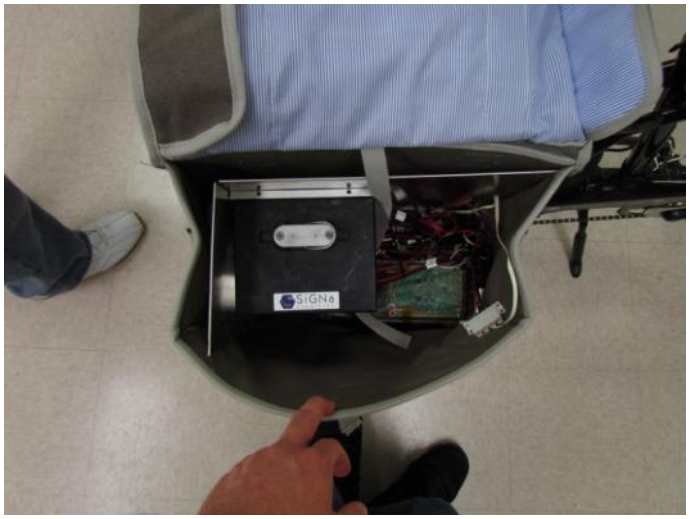

Figure 17. Core mechanical and breadboard electrical components installed in primary compartment of Pannier System 1

The corresponding bag has the battery installed at the bottom of the bag. Significant storage space was still available (Figure 18). Up to six spare canisters, or other supplies, can be stored as desired.

Figure 18. Battery and canister in secondary compartment of Pannier System 1

Figure 19. Dual Pannier System 1 mounted on an eBike

In initial testing of the system, the fuel cell exhaust air was aimed directly towards the canister to aid canister cooling. Unfortunately, because of a lack of ventilation, excess heat built up inside the pannier bag, which caused fuel cell over-temperature errors during some tests. The fuel cell exhaust air was modified to facilitate more direct exits from the system. After the preliminary build, a number of additional changes were made. For example, the various balance of plant components were moved to the opposite side of the system to provide an easy access port for cartridge replacement and water filling. The relocation also cleared the exhaust path for the fuel cell. In addition, an auxuillary fan was more appropriately positioned to bring air into and out of the system.

4. System 2: Single Pannier

An entire re-packaging of the system was completed to fit the system in a smaller, portable container (Pannier System 2). A new battery was found, tested, and integrated within the system. In addition, an interface panel was created that contains system control switches, an LCD display, a 110 VAC socket, a 12 VDC socket, and several USB power connections. This interface panel was mounted on the outside of the pannier to make it easily accessible for the end-user. The new fuel cell stack was mounted at the bottom of the unit with the design

bringing in air from one side of the pannier to provide both reactant air for the fuel cell and cooling air to both the fuel cell and hydrogen generator. The replaceable sodium silicide canister exits on the side of the pannier and is shown on the left of Figure 21.

The pannier system was modified to provide an access door for the cartridge, mounting for the interface board, and an input vent for the fuel cell and cooling air.

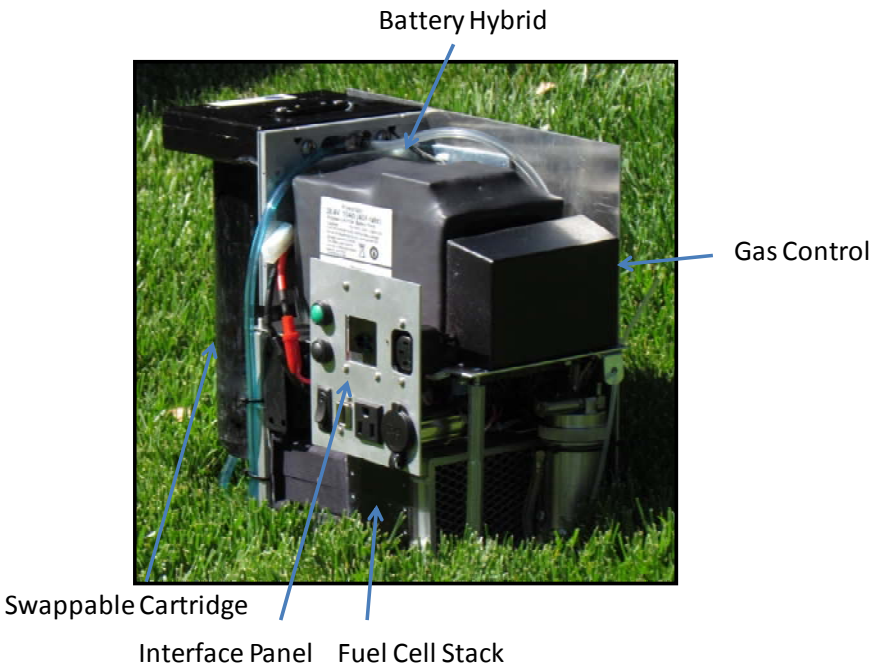

Figure 20 - USAID Distributable Power System

Figure 21. Hydrogen fuel cell sub-assembly external of removable pannier (Pannier System 2)

Figure 22. Pannier System 2 shown mounted on eBike
(Power system shown in foreground for reference)

Table 5.Weight of System / Sub-systems

Components	Mass (Kg)	Mass (lbs)	Mass, Optimized (lbs)
Structural	2.7	5.9	1.3
Hydrogen Generation Plumbing	1.3	2.9	1.8
Electrical	1.2	2.6	1.5
Battery	3.4	7.5	0.8
Fuel Cell	1.6	3.5	3.5
Total Mass	10.2	22.5	8.8

Task 3. Test Integrated System

Task Description

Task 3 included all operational testing of the system. The initial plan intended for the system to be operated by other non-technical staff and users. Outside of some demonstrations, the focus has been on operating with technical staff and in environmental chamber simulations.

Task Results

The DPS300 was equipped with an electronic monitoring system to assist with the technical assessment of the eBike. All test conditions and operating characteristics were tracked to understand the demand profile of the power module, the likely charging and discharging cycles, and more subtle issues like performance variation with temperature.

1. Operational Testing

Most of the testing was done using either 100 or 350 grams of sodium silicide per canister depending on the specific goals of the test. The fuel canisters are capable of storing approximately 500 grams of material. However, limited runs were done with this powder quantity. With 500 grams, the reaction takes place in close proximity to the canister cap. In production, the caps will be molded and be able to tolerate the higher local temperatures due to increased selection of plastics that can be molded as compared to machined. However, even

with 350 grams, all core metrics of this program were demonstrated. In Stage 1, the goal was to achieve over 400 Wh per cartridge. In reality, over 580 Wh of energy was generated in multiple tests. In Stage 2, it is anticipated that the fuel cartridge will be able to utilize 500 grams in the same volume yielding approximately 800 Wh of energy.

From a science and technology perspective, the most critical metric of the DPS300 is energy density, which documents how much energy is delivered per unit of powder weight. As noted previously, gasoline in portable power applications yields 400 Wh/kg or less and batteries yield <170 Wh/kg. As seen in Table 6, SiGNa's sodium silicide fuel cell demonstrated more than 1660 Wh/kg.

Table 6. Example of Realized Energy Density

Test ID	NaSi(g)	Total H2 (L)	FC Energy (Wh)	Energy Density (Wh/kg)
HDC1_T21	100	108.8	170	1698
HDC7_T1	350	396	581	1660

During the Stage 1 program, approximately 258 hours of total testing was performed in different operational and environmental conditions. The total time, powder utilized, and hydrogen gas produced is shown in Table 7. Not all powder was used to generate hydrogen as some experiments did not yield full reaction of the powder as a result of standard testing and development processes.

Table 7.Total Stage 1Testing

Total runtime (entire project)	**258 h**
Total powder consumed	20.52 kg
Total H_2 made	18961 L

Figure 23 shows a typical example of how a hybrid power system architecture works. The fuel cell and battery worked together to power the load (i.e., application). In some situations where there is momentarily low hydrogen flow, the fuel cell output power decreases and the battery power increases. In other moments, where there is ample hydrogen flow capability, the battery is recharged. This is similar to the approach that is used for hybrid electric vehicles.

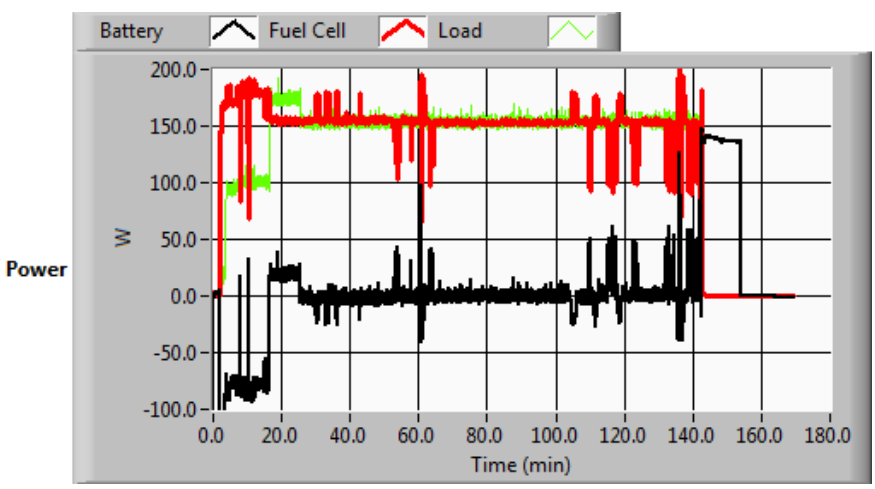

Figure 23. Hybrid Power System

The data in Figure 24 show the final results of the developed power electronics. In the data shown below, the fuel cell otuputs a nominal value of 20 V while the battery is operating at a nominal value of 38 V. The power electronics are designed so the fuel cell voltage is boosted to the correct battery voltage with minimal

losses in conversion. At the beginning of the reaction, it is observed that in this data set, the battery is low but is then recharged by the fuel cell. At the end of the reaction, when the fuel cell turns off, the battery voltage drops as energy is utilized.

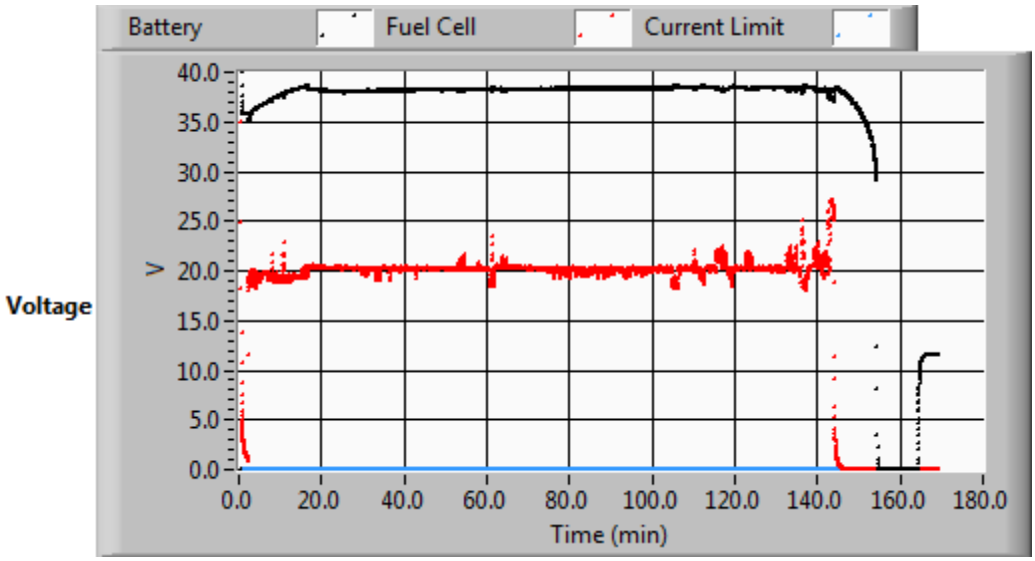

Figure 24. Test Data Example

Figure 25 shows the canister temperature and pressure. The target internal reaction temperature is around 120°C, which minimizes the amount of water that is required for the reaction. In the data set shown, the temperature initially spikes significantly higher than this. The temperature controller must be modified to begin the cooling process as the temperature is rising to avoid the excessive over temperature spike. This will be done in Stage 2.

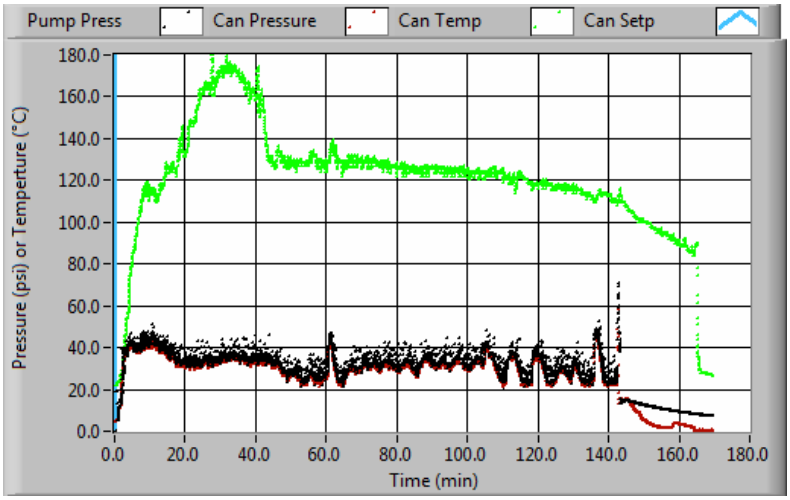

Figure 25. Test Data Example

Daily tests were performed on both the overall system and its individual components. A major change instituted as a result of this testing involved the hydrogen filtration system. This system filters the outgoing hydrogen gas through the incoming water supply to condense any generated steam. During operation, however, a significant amount of this steam was coming through the filter system. While the fuel cell can handle steam, large amounts can flood the fuel cell over time and decrease operation and performance. In the more tightly integrated package, the filtration system was too close to both the fuel cell and the hydrogen canister, which produced significant local heat inside the system and lead to a decrease in its effectiveness. The filtration system

was moved to the front of the system and directly exposed to the input cooling air to enable optimum performance.

These functionality tests have allowed for further tuning of the hybrid system. 200 W of continuous power and over 300 W of peak power have been demonstrated, which is sufficient for an eBike and numerous other applications.

2. Environmental Testing

A Standard Environmental RK/5C Temperature and Humidity Chamber was used to test the hydrogen systems (Figure 26). The chamber is capable of running in a static mode or with dynamic profiles to vary the temperature (as well as relative humidity, although this was not studied in this program) at programmed time intervals. The chamber contains several fail-safe safety controls. A Neodym (HydroKnowz) hydrogen sensor is mounted inside the chamber, which is wired to a normally open valve that allows nitrogen to flow into the chamber when a concentration above 8,000 ppm of hydrogen is detected. If the sensor failed, or lost power, nitrogen would also blanket the chamber.

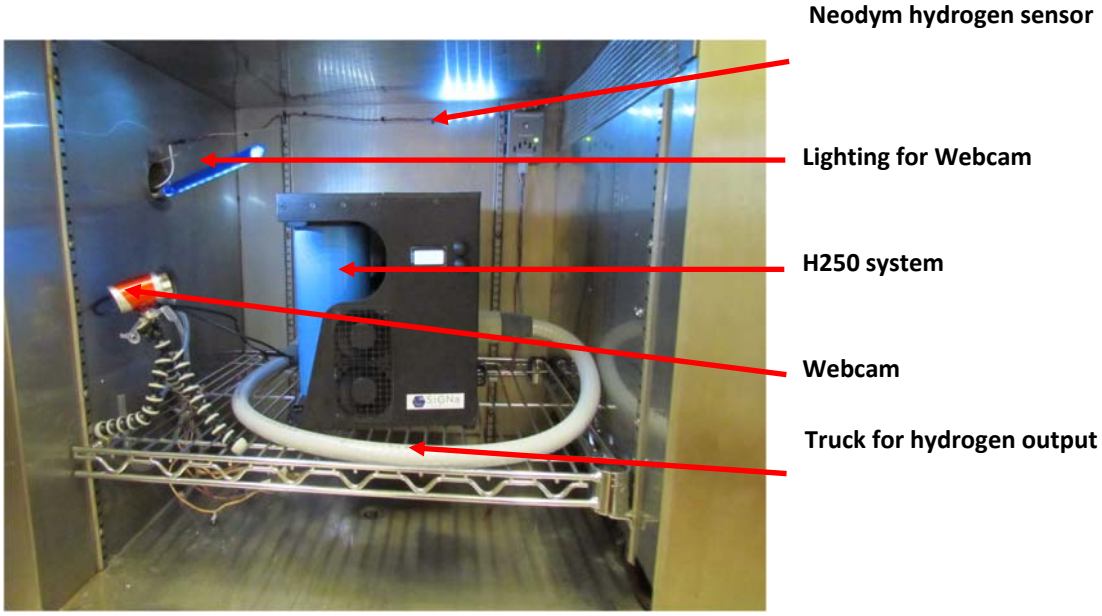

Figure 26. Environmental Test Chamber with H250 System (Prototype1)

If an unexpected event takes place, SiGNa can review recorded video to understand the anomalous event. There are also 7 thermocouples, 1 pressure transducer, and 1 mass flow meter to monitor the chamber's temperature, hydrogen temperature and various system skin temperatures. All data is recorded in LabView. SiGNa used this chamber to perform temperature testing (hot and cold) of the USAID power system. Table 8 details the results of these tests.

Table 8 - Example Environmental Test Results

	NaSi (g)	Total H2 (L)	Total H20 (mL)	H2 flow rate (slpm)	Ambient Temp(°C)	Conversion %
RBC5_T13	250	289.2	863	1.6	5 (30 min soak)	96.7
HDC2_T14	250	288.6	830	1.6	5 (30 min soak)	96
RBC5_T14	350	390.7	1152	1.6	5 (overnight soak)	94
HDC1_T17	350	394.4	1090	1.6	50* (2 hour soak)	94
HDC3_T6	200	195.0	466	1.6	-10 (2 hour soak)	83

* E Chamber set at 40% RH

3. Cold Temperature Operation

Figure 27 represents a sample of the data collected during each operational run. Some parameters vary, but the overall system is designed to output constant power as the control system is used to vary hydrogen generation, fuel cell power, and battery power to deliver the user required load.

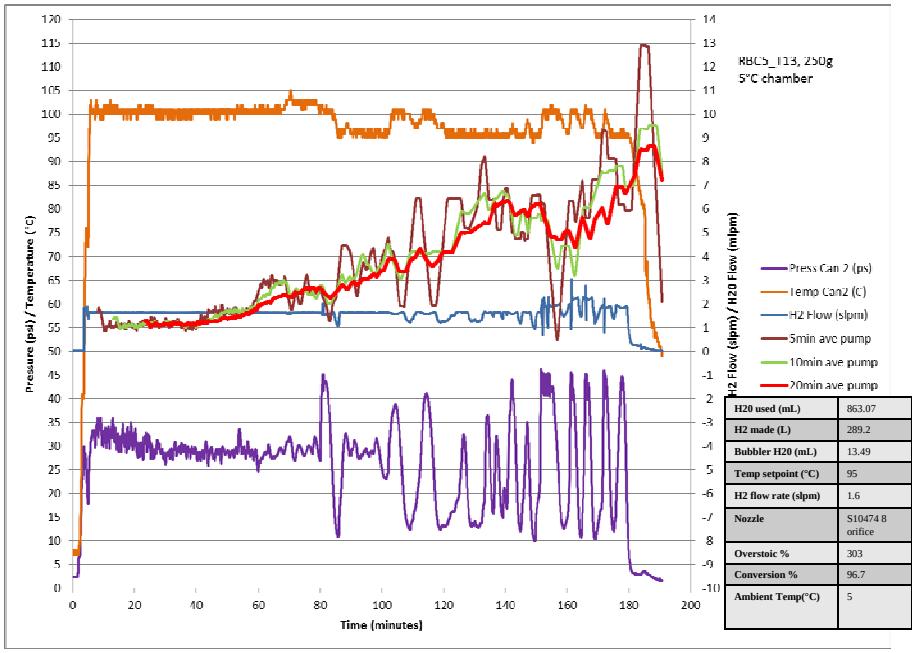

H20 used (mL)	863.07
H2 made (L)	289.2
Bubbler H20 (mL)	13.49
Temp setpoint (°C)	95
H2 flow rate (slpm)	1.6
Nozzle	S10474 8 orifice
Overstoic %	303
Conversion %	96.7
Ambient Temp(°C)	5

Figure 27. Example Results of Hydrogen Generation System When Operated at 5 °C

An important test was a startup of the hydrogen generation system after a two-hour soak at -10°C. A salt water mixture was used to avoid water freezing. ***The system started instantaneously, even under these very cold conditions. This is a critical test as most energy storage technologies have problems operating properly below freezing.***

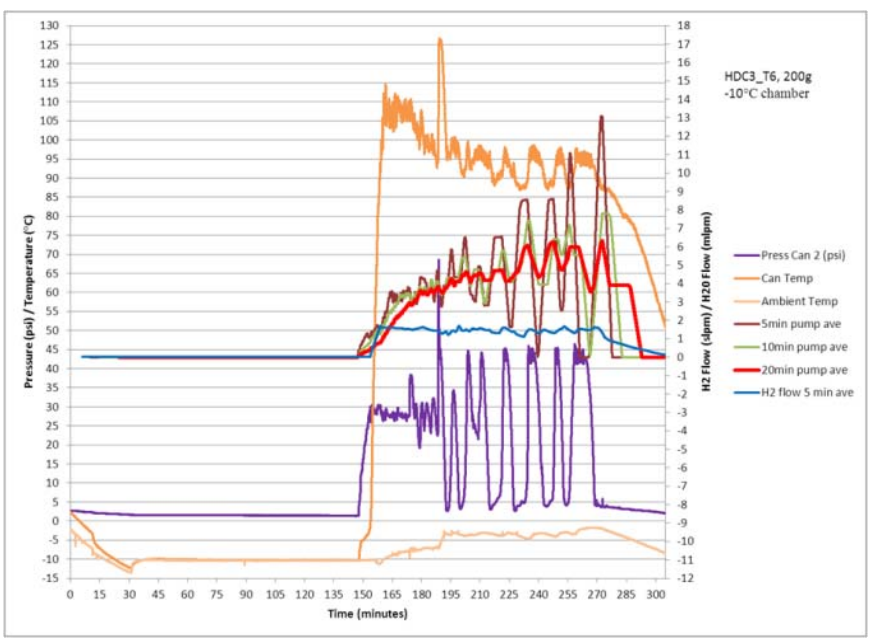

a. Data from Two Hour Soak and Operation at Low Temperature Operation (-10 °C)

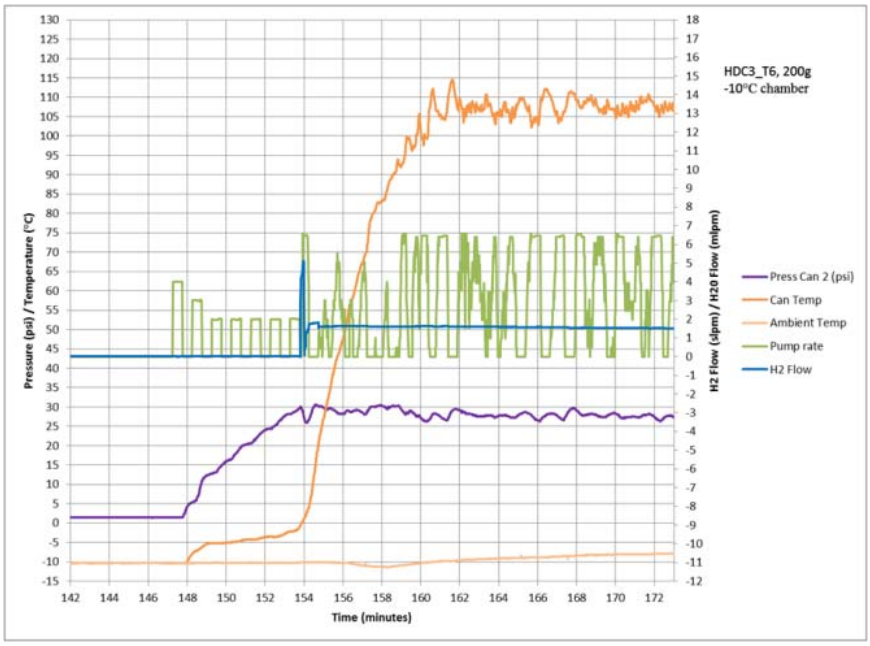

b. Start up After Two Hour Soak at -10 °C Operation

Figure 28. Two Hour Soak and Startup at -10 °C

4. High-Temperature Operation

A test was also performed at 50ºC. No issues with the thermal control systems were observed and the heat removal system performed appropriately. Some oscillations in pressure were observed due to the controller tuning. It has been concluded that different control parameters are required as the cartridge is operated over time. The code can readily be adjusted to incorporate this during Stage 2 to provide improved overall reaction control.

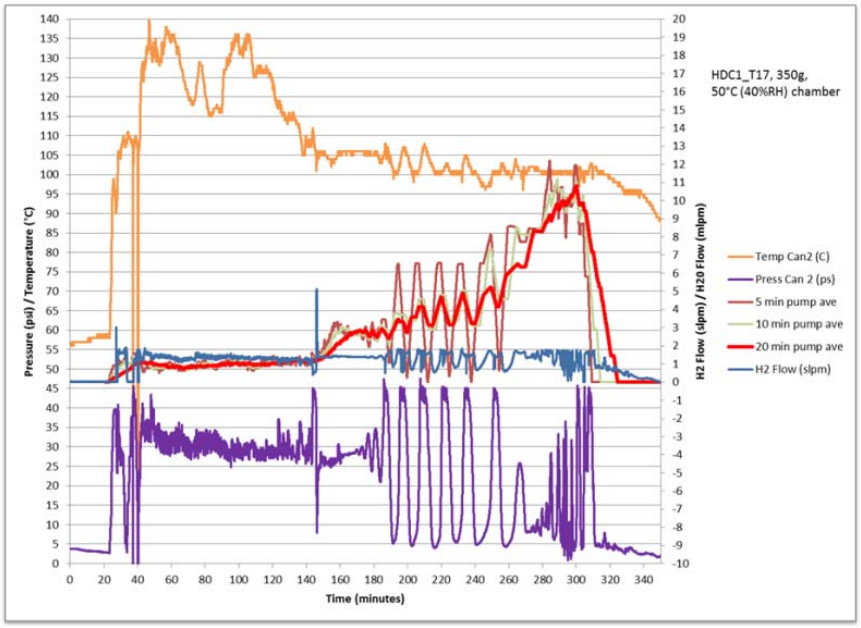

Figure 29. Data from High Temperature Operation (50ºC)

Task 4. Reporting and Administration

Task 4 included for all program management and reporting to the USAID contracting office. This final report concludes the reporting requirements for SiGNa's Stage 1 program. SiGNa is planning a system demonstration of the Stage 1 system at USAID in Washington, DC or Davis, CA. SiGNa has also completed and submitted both a Stage 2 Concept Paper and a Stage 2 Full Proposal. The Stage 2 Proposal is attached to this document for easy reference.

MARKET NEED AND COMPETITION

Market Need

In terms of applicability in the developing world, SiGNa's portable power system has the potential to improve the lives of an enormous number of people. There are 1.45 billion people worldwide without access to electricity. The Stage 1 program focused on demonstrating a system that can provide power for the most critical power needs. Certainly the refrigeration of vaccines (cold chains) and water filtration systems will be an important use for this technology. Other critical applications include lighting, computers, telecommunications equipment, and mapping systems.

The existing system can be used to provide propulsion for cargo bicycles, such as those commonly used in developing areas of the world (Figure 30). The demonstrated power system can extend the range of eBikes from 20 to 100 miles at approximately the same weight of a lithium ion battery. The range can be extended by an additional 100 miles (160 km) (with moderate pedaling) for each additional sodium silicide cartridge (0.75 kg or 1.65 lb) carried. Because sodium silicide is solid and non-flammable, these cartridges are inherently safer than other storage alternatives.

Figure 30. Retrofitted Standard Bike with Load Carrying Capability

In addition, the power system can also be separated from the bicycle and used for a variety of applications, such as refrigeration in cold-chain management, cellular telephone charging, lighting, water purification and water pumping (Figure 31).

Figure 31. Distributable Power System

A key observation made during the Stage 1 program is that many of these applications can be met with relatively low power. For example, a small field office with lighting, computers, telecommunication equipment,

and refrigeration units can be powered with less than 150 Watts of power. These power demands are well within the capacity of the Stage 1 power system. The potential uses and associated energy costs for this power solution are summarized in Table 9.

Table 9. Recurring Cost for Sample Applications

Application Category	Application Example	Required Power (Watts)	Cost (US$)
Standard Cell Phones		<0.5	$0.0018 /hour
Smartphones		0.5 to 1	$0.0033 /hour
Tablets		3 to 8	$0.023 /hour
Netbooks/Laptops		8 to 30	$0.07 /hour
LED Light Bulb (Replacement for 40W Incandescent)		4.5	$0.02 /hour
Vaccine Refrigerator (68 L capacity)		20	$0.0875 /hour
E-Bike (Avg. Power, No Pedaling)		175	$0.045 /hour
UV Water Filtration (Individual)		6	$0.0036 /gallon
Purified Drinking Water for 1000 People (1 Gal /min for 17 Hr→1020 Gallons)		41	$0.003 /gallon
Small Work Center	Three Computers + Two Light Bulbs + Three Phones + Vaccine Refrigerator + Water Filtration	3*20 + 2*4.5 + 3*1 + 20 + 41 = **133**	$0.6 /hour

Note: For reference, a Watt is a unit of power. Energy is the cumulative use of power and is often represented with units of watt-hours (Whr). Example: The use of 1.5 watts of power for 2 hours is equal to 3 watt-hours (Whr) of Energy.

Market Opportunities and Pricing

The need for electrical power has been well established and its demand continues to increase in all nations and across all income classes. Importantly, new advances in technology, such as smartphones and LED lighting, provide significant benefits for the power required. The rapid improvement in these technologies couples well with the USAID Distributable Power System as the ratio of benefits-to-energy-consumption continues to rise dramatically.

The proposed Stage 2 program will initially focus on very high-value applications where power is a life-critical necessity, such as medical cold chains, disaster relief efforts and restoring power to victims of disasters.

These initial market segments will continue to be viable for the long term. Over time, as the price point decreases and distribution networks improve, additional market opportunities will open up across the globe. Within three years of the completion of Stage 2, industrial market applications are expected to become a significant customer base and will enable an entirely new class of life-changing applications. For example, a system from ezClone is used to clone plant products to facilitate local farming. ezClone already has multiple systems throughout Africa and they each require up to 125 W of power. Other applications within the industrial category include small aid relief stations, portable medical devices, farming equipment, and other light industrial equipment. As the costs continue to decrease, the portable power systems developed in this program will be accessible to a much wider set of end uses. It is anticipated that energy delivery be supported by a microfinance model where an entrepreneur can provide a series of solutions and charge on a per use basis.

Competitive Analysis: Existing Alternatives

Standard portable power solutions available today include gasoline generators, disposable batteries, rechargeable batteries, and solar panels. These existing power technologies, however, are simply not able to meet the dynamic needs of most portable and remote electronic devices. Existing solutions are either too heavy, expensive, do not provide high enough power density, or emit high levels of pollution.

Table 10 compares SiGNa's power system performance to the performance of gasoline generators and batteries. Exact comparisons are difficult because the actual capacity of batteries and generators change significantly based on the power requirements of each application. However, Table 10 clearly demonstrates that SiGNa's power system provides significant savings in both weight and cost. More importantly, the significant weight savings make many portable applications possible that were previously impractical. Finally, neither batteries nor generators can compare to the environmental impact of the SiGNa power system, where essentially no toxic emissions or by-products are generated.

Table 10. Power Technology Comparison

	Weight			Cost			
Technologies	Fixed Weight (kg)	Energy / Weight* (Whr/kg)	Total Weight For 3000 W-Hrs of Energy	Fixed Cost	Variable Cost for 3000 W-Hrs	Total Cost for 30 Uses at 3000 W-Hrs Each	Notes
SiGNa Energy	3.7	1333	**6.0**	$125	$ 18.75	**$ 688**	$10/kg of NaSi
Gasoline Generator	13.40909	440	**20.2**	1000	$ 10.13	**$ 1,304**	$ 4.50 per gallon of gasoline
Disposable Batteries		140	**21.4**	0	$ 1,392.86	**$ 41,786**	$65 for each disposable 140 W-Hr battery
Rechargeable Lithium Batteries		100	**30.0**	2850	$ 3.00	**$ 2,940**	$95 for each rechargeable 100 W-Hr battery, $1 / kWHr for Recharging
		*Includes packaging					

The following sections will provide more detailed information regarding the difficulties of using generators and batteries for portable power applications.

Gasoline/Diesel Generators

Gasoline generators do work reasonably well for applications that require high levels of power (> 5,000 W). For example, a high-power gasoline generator could efficiently provide backup power for an entire hospital. However, for lower power applications (less than 500 W), gasoline generators are incredibly inefficient and generate significant amounts of pollution. One gasoline generator test yielded only 1% energy conversion efficiency (i.e., the amount of energy per gallon of gasoline) when operating below 500 W. As the power output level decreased based on usage, the conversion efficiency declines even more significantly.

A gasoline generator is also not practical for many remote applications. The weight and bulk of these generators exceeds that which can easily be carried, especially when its weight is combined with the weight of the items it will power and extra fuel to maintain continuous operations. The Honda 1000 generator shown in Figure 32 weighs 29 lbs, which is considered very light for a gasoline generator. The Honda generator is capable of generating 96 W of power at 12 V. This generator uses 0.6 gallons of gasoline every 8 hours yielding a

gasoline energy density of 768 Whr / 1.61 kg → 476 W-hr/kg. Gasoline generators also cannot be run indoors due to the hazardous emissions they release, such as carbon monoxide.

Figure 32. Honda Gasoline Generator Example

The DPS300 system, in comparison, provides a significant improvement over gasoline generators in terms of performance, weight and emissions. The Stage 2 fuel cell power generator will weigh less than 10 lbs and once it is fully commercialized will be less than 5 lbs. Sodium silicide has an energy density of over 1722 Whr/kg, proving that sodium silicide will reduce shipping weight by a factor of four. The DPS300 generator can also be safely operated indoors as the only emitted by-product is a very small amount of water vapor.

Small gasoline generators are very inefficient and generate large amounts of pollution. *In the United States, the EPS estimates that 15% of all green-house-gas emissions come from small spark ignition engines.* Operation of a gas-powered lawnmower, which is similar to operation of a generator, can emit as much pollution as driving a car more than 320 kilometers. ***In contrast, the pollution associated with the DPS300 system is near zero.*** The only modestly significant source of pollution associated with this fuel cell comes from the actual transportation of the sodium silicide material, which would require a similar method to any other source of portable energy.

Batteries

There are two types of battery technology: primary (i.e., disposable) and rechargeable. Consumers are very familiar with primary batteries, like the standard AA alkaline batteries. The main issues with batteries are that they are expensive, heavy and contain toxic materials, like lead and other metals. In addition, alkaline batteries have very low power density. As a result, the more power that is required to power an electronic device, the less energy that can actually be delivered by the battery. For example, based on their rated capacity, 4 alkaline batteries should be able power a smartphone for hours, but the actual usage time would be measured in minutes. The Rated vs. Actual issue is depicted in Figure 33 for various battery technologies.

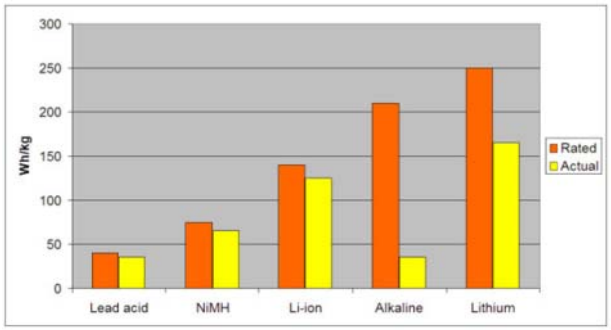

Figure 33. Rated vs. "actual"battery capacity for various battery technologies.
(see batteryuniversity.com for additional details)

In practice, the inverse relationship between the energy supplied by a battery and the power consumed by the device is more dramatic than that shownin Figure 33. For instance, when using a lithium battery for a small office with multiple devices, or to power an eBike, the realized energy density drops to approximately 60 Whr/kg, despite the "actual" battery capacity over 170 Whr/kg. Sodium silicide, on the other hand, stores energy at a level of 1722 Whr/kg (1333 Whr/kg when in a cartridge), which is almost a ten times greater amount of energy than the rated lithium battery technology(170 Whr/kg).

Rechargeable batteries also have very long recharge times. This is especially true for higher capacity batteries, where the typical charge time can be 8 hours. This makes their use impractical for many applications where a grid is not available. Smaller devices with rechareable batteries, which can recharged by a DPS300, is a very realistic option.

For a more direct comparison to an advanced lithium polymer battery, the performance of a high-power battery is shown in Table 11. For this comparison, a standard, commercially-available lithium battery was selected (there are many other batteries available of the market with comparable specifications). An important realization is that these types of batteries significantly degrade even after a few months of usage. In addition, if the batteries are left discharged for a modest period of time (as little as a few days), the energy capacity can easily be reduced by over 50%. The table below, however, assumes proper storage and recharging of batteries. Even with this assumption, for each additional unit of energy carried, batteries are over six times heavier and significantly more expensive than a sodium silicide solution.

Table 11. Battery Comparison Example

Technology	Lithium Polymer Rechargeable (LiFePO4)	Sodium Silicide
Energy Per Unit	360 Whr / Battery	800 Whr / Cartridge
Cost	$450	$7
Weight	5.1 kg	0.75 kg
Dimensions	14” X 6” X 2 ¾”	3.5” diameter X 10”
Energy Density	70 Whr/kg	>1300 Whr/kg (powder + cartridge)
Source	gocarlite.com	SiGNa

As previously mentioned, batteries can be divided into two main categories: disposable and rechargeable. Disposable batteries present a significant environmental hazard, particularly when distributing large amounts of energy. The negative environmental effect of disposable batteries can be clearly seen in their use in military deployments. The military uses large quantities of batteries to provide power to telecommunications, computing, and battlefield equipment. The logistical and environmental result of using this type of battery is readily apparent, as seen in Figure 34, where massive quantities of used lithium batteries need to be stored and ultimately disposed. In these instances, the use of a DPS300 would completely eliminate this type of hazardous waste as sodium silicide fuel cell cartridges can be fully recycled and the only by-product (sodium silicate) can be used as a feedstock for many auxiliary industries.

Figure 34. Field of Used Lithium Batteries

Solar Power

Solar power is an attractive energy source due to its low operating costs. However, solar panels require large active areas to generate a useful amount power and require near direct sunlight. As a result, in reality solar power can only be a complementary solution. For example, generating enough power to operate an eBike would require a solar panel system that is ~25 square feet. This is clearly impractical and prohibitively expensive.

Figure 35. Solar Panel Example (Sunforce Solar Panel 39110, $650, 123W, 59"X26 ¾" X 2 ¾", 34.2 lbs)

The same difficulties are present when considering portable solar-powered applications. In instances where mobility is not important, such as a permanent installation on a roof, solar power can provide adequate energy at low total power usage. But solar power is further limited by the inconsistency of sunlight. For these reasons, solar panels typically have limited portability and must generally by coupled to an additional energy source.

The power electronics of the DPS300 system can readily be adapted to include a complementary solar panel as an input energy source. In these instances, the DPS300 would provide the voltage regulation and battery recharging, if applicable. The fuel cell would generate power only when required; if solar energy was available, then the solar energy would be utilized first. In this way, SiGNa's solution can serve either as a sole power source for all applications or as a complimentary solution to solar for applications where solar is available.

Competition: Next Generation Technologies

In addition to the incumbent technologies (generators, batteries, and solar power), there are other fuel cell technologies currently being developed. Competition for the technology being developed in this program falls into two categories: alternative fuel cell technologies and alternative hydrogen storage technologies.

Alternative Fuel Cell Technologies in Development

There are three primary types of fuel cell technologies most likely to be used for portable power applications: low temperature hydrogen, solid oxide and direct methanol. The class of low temperature hydrogen fuel cells is more technically classified as low temperature proton-exchange-membrane. This type of fuel cell is widely regarded as the lowest cost, easiest to produce, and highest reliability fuel cell. This is the fuel cell used in conjunction with SiGNa's DPS300 system. However, due to the past difficulties generating hydrogen, alternative fuel cell technologies have been developed which use non-hydrogen fuel cells. These fuel cell types (solid oxide and direct methanol) are summarized here for reference.

Solid oxide fuel cells work at very high temperatures (>500°C) and are typically used with fuels such as butane and natural gas. The advantage of solid oxide fuel cells is that they can utilize different types of carbon fuels. Due to their high temperature operation, however, they typically have limited on/off capability and are most suitable for high power applications, such as those on a public utility scale. Some developers have made progress developing small solid oxide systems for military applications, but these systems still suffer from limited lifetime and high complexity.

Direct methanol fuel cells (Figure 36) came about as an alternative to hydrogen fuel cells due to the difficulties of storing hydrogen. Despite methanol's toxicity, it is fairly available and it has a high energy density that is comparable to sodium silicide. The primary issues with direct methanol fuel cells are cost, heat, and reliability. Methanol fuel cells use about ten times more platinum than hydrogen fuel cells. In addition, a methanol fuel cell dissipates approximately three times more heat than a hydrogen fuel cell. These factors make lightweight portable systems difficult.

Figure 36. Methanol Fuel Cell Example: Smart Fuel Cell, 90 Watts, 27.5 lbs

Alternative Hydrogen Storage Technologies

The fuel cell technology in SiGNa's Stage 1 program utilized a low temperature PEM technology. For portable power technology (<3 kW), low temperature PEM fuel cells are unmatched in terms of cost, reliability, durability, weight, and start/stop capability. To date, however, low temperature PEM fuel cells have been limited by the availability of lightweight hydrogen storage technologies.

Hydrogen storage technologies can be divided into the following categories: reformed hydrocarbon liquid fuels, high pressure tanks, metal hydrides, and chemical generation (Table 12). Of the existing solutions, chemical hydrogen generation is generally considered to be the most practical solution for portable applications. Generating hydrogen on-demand eliminates the safety and logistical issues associated with storing hydrogen gas. In some instances, however, the disadvantages that other storage technologies bring can be alleviated for certain applications. For instance, the difficulties with refilling high pressure tanks can be sufficiently alleviated with on-site refilling stations for forklift applications. For other applications, where limited start-stops are necessary, such as utility power, reforming techniques can work well.

Table 12.Overview of Hydrogen Storage Technologies

Hydrogen Technology	Most Significant Issues Impacting Commercialization
Reformed Liquid Fuels	Similar issues as solid oxide fuel cells including: poor reliability, poor start-stop capability, and hydrogen purity.
High Pressure Tanks	Difficult to refill, user safety concerns, and heavy connectors.
Metal Hydrides	Difficult to refill, long refill times, limited power density, and high cost.
Chemical Hydrogen Generation	***Generally thought as the most promising for portable fuel cells.***

Despite significant work in chemical hydrogen technologies, none have shown the complete capabilities that are enabled by SiGNa's sodium silicide (Table 13). Sodium silicide readily facilitates a PEM fuel cell system that is low weight and low cost. No other competing hydrogen generating technology offers all of the benefits that sodium silicide brings (no catalyst required, fast-reacting, water-soluble by-product, thermally stable, and high selectivity).

Table 13. Chemical Hydrogen Technologies

Aluminum	Significant catalyst and a complicated system are required. Reaction byproduct is non-soluble, which coats unreacted materials.
Sodium Borohydride	Significant catalyst and a complicated system are required. Significant problem with off-gassing and uncontrolled generation.
Sodium Silicide	No catalyst required, fast and stable reaction enabling low costs systems.

Business Plan Overview

The sheer nature of the DPS300 product design is that it is a lightweight, distributable power system. As such, this portable power solution can be easily and affordably replicated in communities around the world, even within the United States. The fuel cell systems can be used by individual households, schools, service organizations, medical clinics, etc. to provide access to a reliable source of power. Communities can also share the use of a fuel cell generator, thereby significantly increasing the number of people and organizations that could benefit from access to power. For emergency response situations, the fuel cell generators can be used repeatedly for many years and in many different disaster relief situations.

The primary technical scaling issue comes from the manufacturing of sodium silicide itself. SiGNa has developed its partner network with multinational chemical suppliers and is ramping to the production to over 10 tons per day of sodium silicide power.

Public and Private Sector Intervention

Large volume scaling will be driven by innovation in the private sector. There is a rapidly growing demand for an alternative power source to replace batteries and low power combustion engines. Consumers are demanding a portable power solution that is clean, easy to use, affordable, and can extend the runtime for their electronic devices. Sodium silicide fuel cells are a realistic and affordable energy solution that will meet the demands of both consumers and equipment manufacturers. As more electronic products incorporate sodium silicide technology, the cost of sodium silicide fuel cells and replacement fuel cartridges will be reduced over time.

SiGNa is currently in discussions with private partners to facilitate the market demand for sodium silicide fuel cells. Government funding will be required in Stage 2 to provide the initial scale.

Barriers

One of the most significant barriers to scale is the lack of existing fuel cell companies that are currently manufacturing high volumes of fuel cells. Jadoo Power was selected as the fuel cell stack provider for this program as they received an Innovation in Manufacturing award that enabled them to build a high volume fuel cell stack production line. The same stack components to be used in the USAID system are proposed to be used in a line of powered emergency medical stretchers. The leverage of this manufacturing award will significantly reduce the overall risk of scale.

Forecast of Beneficiaries

The potential for the DPS300 is enormous; it is anticipated that millions of individuals around the world will ultimately benefit from sodium silicide fuel cell technology. For each individual fuel cell generator in use, the number of clients/beneficiaries will vary based on the specific usage of the power system. A single power system can filter water, provide distributed home lighting, and communications for hundreds if not thousands of people. For example, one cartridge of sodium silicide stores enough energy to enable the following activities:

- Filtering 6,220 liters of water (enough to support 1,640 people for one day).
- Charging roughly 1,500 cell phones.
- Cooling medicines/vaccines for 43 hours (when coupled to a refrigerator).
- Extending the range of traditional lithium ion batteries from 20 to 100 miles (when coupled to an eBike). Up to 7 cartridges can be stored in the lightweight portable system providing enough energy for 700 miles.

Because of this distributed-benefit effect, a small number of fuel cell generators can have a very large human impact. In the proposed Stage 2 program, up to 100 portable fuel cell generators will be manufactured and distributed to developing regions. ***Assuming that these generators are shared by small communities (to provide filtered water, communications recharging, etc.), tens of thousands of individuals would benefit from the Stage 2 program alone.*** Full commercialization and roll out of these power systems will dramatically increase the number of individuals and organizations served.

Within five years of completion of a Stage 2 program, the USAID DPS300 has the opportunity to impact more than 75 million people across the world. At a cost for portable power of $0.34/month, this solution will enable a host of life-changing applications including medical cold chains, cellular and smartphone access, LED lighting, water filtration, and other remote applications that require power (see a list of examples in Table 9).

The developed technology enables significant economies of scale that can either be produced with low cost labor or complete automation in the U.S. or abroad, which will dramatically decrease the system cost. The core financial projections are shown in Table 14.

Table 14. SiGNa Business Plan Projections

Market Growth Area	Phase II Development	Early Markets / High Value Applications (Emergency Response, Cold Chains)		First Adopters, Microenterprise, Light Industrial, Field Offices		Distributable Shared Power Solution	Widely Accessible Portable Power
Period	2011-2013	2013	2014	2015	2016	2017	2018
# of Systems	25	2,500	10,000	50,000	200,000	400,000	800,000
# of Uses Per Year	25	25	25	25	35	35	40
# of Cartridge Fills	625	63,125	313,125	1,562,500	9,100,000	22,750,000	56,000,000
Number of People Impacted Per System	100	150	125	100	85	60	40
Total Number of People Impacted	2,500	377,500	1,627,500	6,627,500	23,627,500	47,627,500	79,627,500
Revenue Per System	$4,000	$1,100	$750	$500	$350	$200	$100
Total System Revenue	$100,000	$2,750,000	$7,500,000	$25,000,000	$70,000,000	$80,000,000	$80,000,000
Revenue Per Fill	$40.00	$12.00	$9.12	$6.72	$5.28	$3.84	$3.36
Total Fill Revenue	$25,000	$757,500	$2,855,700	$10,500,000	$48,048,000	$87,360,000	$188,160,000
Total Revenue	$125,000	$3,507,500	$10,355,700	$35,500,000	$118,048,000	$167,360,000	$268,160,000
$ / Person / Month		$ 0.77	$ 0.53	$ 0.45	$ 0.42	$ 0.29	$ 0.28

Usage Needs

Over the time period projected in SiGNa's business plan, the total usage per user increases by a factor of 10. However, due to the significant benefits of economies of scale, the cost per user will continue to decrease despite the significant growth in energy usage. Because of the increased energy per user, it is anticipated that one system will support the needs of fewer people, but on a much broader scope as use applications such as lighting, electronics and communications are embraced and communities continue to flourish.

Cost and Economies of Scale

Both sodium silicide and the DPS300 system developed in this program require economies of scale to reach the projected cost targets. For at least the first four years, as fuel cell production reaches 10,000 units per year, the risk associated with meeting the cost targets is very low. The price points are well within the capacity of multiple existing fuel cell stack vendors, including Horizon, Protonex, and Jadoo. Jadoo is the anticipated vendor for SiGNa's Stage 2 program, as they provided the current fuel stack in the Stage 1 program.

Jadoo has received a stack manufacturing award from the U.S. government to develop a high-volume process for fuel cell stack assembly. It is anticipated that SiGNa's USAID program will leverage the innovations from this award. For ultra-high volumes (>200,000 fuel cells per year), the entire fuel cell supply chain will need to be evaluated carefully. This complete manufacturing supply chain will be developed during Stage 2. It is anticipated that the fuel cell membranes and gas diffusion layers, which can be supplied on large rolls of material and easily shipped, can be sourced globally as there are production sources in the U.S., China, and Europe. The cutting of membranes and assembly into a fuel cell stack could likely be done with any number of worldwide partners once a design is established at the completion of Stage 2.

While not reflected in SiGNa's business plan projections, it is anticipated that the actual fuel cell system costs are significantly lower than that shown. Some portion of the fuel cell cost will likely be amortized over a portion of sodium silicide usage. This model is similar to the printer-cartridge or video game-console model, where the printer or console is nearly given away in order to establish a much larger market share for future cartridge sales. Once user behavior data is collected in Stage 2, this data will be incorporated into the financial projections, and the model will be updated at that time.

In addition to the fuel cell stack, sodium silicide production will also need to be ramped. Sodium silicide can be produced with high-volume, continuous manufacturing methods. The raw material costs (in today's market) are $4.00 per kilogram using U.S. price quotes. ***It is important to note that none of the raw materials are***

affected by the rising costs of petroleum. International sourcing will bring down these raw materials costs even more significantly. India, in particular, has significant industrial raw material experience and capacity.

The production of sodium silicide is exothermic (i.e. heat generating), so this heat enables a lower-energy consuming process. While heat is required to initially heat the reactor, the actual sodium silicide formation process releases heat, thus allowing the process temperature to be maintained with minimal external heat inputs. This, along with the process requiring no waste or solvent use, results in a very low cost of material formation and a very "green" low carbon footprint process. The primary costs are the initial costs associated with capital equipment. SiGNa is working with American Pacific Corporation (AMPAC), an established U.S. sodium handler to further scale our sodium silicide production. Even with U.S. prices, we anticipate reaching levels of $10 /kg in the short term with continued cost reductions anticipated based on the volume increase and the low cost of material inputs.

Potential Partners and Distribution Strategies

In order to enable distribution to developing regions around the globe, SiGNa has identified several distributors. SiGNa has already begun building relationships with these organizations with several face to face meetings in India. Each organization has businesses that would benefit the raw material supply (industrial), system manufacture (engineering), and final distribution to the end-user (telecommunications and consumer products). Throughout Stage 2 further discussions will be needed to finalize the partner choice, but each will be able to drive substantial growth and user adoption.

Bicycle Partners and Vendors

SiGNa has received significant interest from every bicycle vendor that we have communicated with. Multiple options are available; it is more about selecting the right opportunity to develop an eBike option. If a choice was made today, SiGNa would most likely select a bicycle manufactured by World Bicycle Relief combined with a wheel hub electric motor developed by a company called Golden Motor.

Alternatively, SiGNa has had significant interaction with the Pedego Electric Bicycle Company. Pedego has provided an electric bicycle for SiGNa's development as well as publically demonstrating the fuel cell technology at Interbike 2010 in Las Vegas. Pedego is capable of making well-built electric bicycles and has expressed interest in participating in Stage 2, if this is the path selected.