USAID | AFGHANISTAN
FROM THE AMERICAN PEOPLE

SHEBERGHAN GAS GENERATION ACTIVITY (SGGA)

Contract No. EPP-I-00-03-00004-00, USAIDTask Order No. AID-306-TO-12-00002

Report on Best Practices for QA/QC for Gas Processing Plants

(Modification 5, Section F.5.B, Deliverable 18)

Submitted: February 28, 2015

Prepared by:

Advanced Engineering Associates International, Inc. (AEAI)/SGGA Project Team
1707 L Street, NW, Suite 1030, Washington, DC (USA) 20036
Telephone: 1-202-263-0601

This report is made possible by support from the American People sponsored by United States Agency for International Development (USAID). The contents of this Report on Best Practices for QA/QC for Gas Processing Plant was prepared by a subcontractor to Advanced Engineering Associates International, Inc. and is the sole responsibility of Advanced Engineering Associates International, Inc. and does not necessarily reflect the views of USAID or the United States Government.

Table of Contents

1. EXECUTIVE SUMMARY 1
2. INTRODUCTION AND SCOPE 2
2.1 PURPOSE OF REPORT 2
2.2 "BEST PRACTICES" 2
2.3 FOCUS ON A NEW ENTITY WITH DATED OR LIMITED EXPERIENCE 3
2.4 FOCUS INTERNATIONAL BEST PRACTICES TAILORED FOR AFGHANISTAN 3
3. TYPES OF NATURAL GAS PROCESSING 4
3.1 SEPARATION 5
3.2 SEPARATOR COMPONENTS 5
3.3 SEPARATOR TYPES 6
VERTICAL SEPARATORS 6
HORIZONTAL SEPARATORS – SINGLE TUBE 7
DUAL TUBE HORIZONTAL SEPARATOR 8
SPHERICAL SEPARATORS 9
SEPARATOR SIZING 11
3.4 DEHYDRATION 11
3.5 NATURAL GAS TREATING 14
4. DEFINITION OF QA AND QC 21
4.1 QA/QC AS APPLICABLE TO NATURAL GAS PROCESSING 21
4.2 WHY DO QA/QC? 21
5. INTERNATIONAL CODES AND STANDARDS 23
5.1 RECOGNIZED INTERNATIONAL STANDARDS 23
5.2 ISO HARMONIZATION PROCESS 23
EXAMPLE: DESIGN FACTORS FOR NATURAL GAS PIPELINE POPULATION DENSITY 24
6. BEST PRACTICES 25
6.1 DESIGN 25
6.2 GAS PLANT PROCESS DESIGN 28
6.3 GAS PLANT OPERATIONS AND MAINTENANCE 40
6.4 OPERATION PROCEDURES 48
6.5 MAINTENANCE PROCEDURES 48
6.6 SAFETY EQUIPMENT/PERSONAL PROTECTIVE EQUIPMENT 52
6.7 SAFETY TRAINING 54
6.8 CHEMICAL STORAGE AND HANDLING 55
6.9 MATERIAL SPARE PARTS DETERMINATION 60
6.10 CONSTRUCTION 61
6.11 SAFETY BEST PRACTICES 63
6.12 HOW TO IMPLEMENT A FORMAL OCCUPATIONAL HEALTH AND SAFETY PROGRAM 66
7. POLICIES AND PROCEDURES REQUIRED FOR GAS PROCESSING OPERATIONS 73
7.1 HAZARD IDENTIFICATION AND EVALUATION 73
7.2 CONCEPTS 73
7.3 ACCIDENT MODEL 73

7.4 JOB HAZARD ANALYSIS 75
7.5 PERMIT TO WORK 77
7.6 DEFINITIONS 77
7.7 HAZOP (HAZARD AND OPERABILITY) 80
7.8 OPERATIONAL RISK MANAGEMENT 84
7.9 HEAT TRACING 89
7.10 LOCKOUT/TAG OUT PROCEDURES 90
7.11 REQUIREMENTS 92

8. SPARE PARTS MANAGEMENT OF AN OPERATING NGPP 98

8.1 GENERAL 98
8.2 STAGES OF THE LIFE CYCLE OF SPARE PARTS MANAGEMENT 98
8.3 SPARE PARTS LIST OF A TYPICAL NGPP 99
8.4 WHAT IS SPARE PARTS INVENTORY MANAGEMENT? 100
8.5 SPARE PARTS INVENTORY MANAGEMENT 100
8.6 MATERIAL CONTROL OF PURCHASED SPARE PARTS INVENTORY 101
8.7 PROCUREMENT MANAGEMENT 102
8.8 DEMAND AND REPLENISHMENT PLANNING 107
8.9 DESIGN AND VENDOR DEVELOPMENT 109
8.10 SUPPLY CHAIN MANAGEMENT 110

9. LABORATORY AND SAMPLING PRACTICES/PROCEDURES 112

9.1 SAMPLING 112
9.2 LABORATORY GENERAL PRACTICES AND PROCEDURES FOR SAFETY 115
9.3 GAS SAMPLING PROCEDURE FOR HC AND/OR SULFUR ANALYSIS 121

10. METERING AND CALIBRATION TO ENSURE ACCURATE DETERMINATION OF VOLUME AND QUALITY 124

10.1 SAMPLING 125
10.2 CALIBRATION PROGRAM 125

11. PROCESS OPTIMIZATION 126

11.1 APPROACHES TO FINDING OPTIMUM OPERATING CONDITIONS 126
11.2 HOW TO OPTIMIZE NGPPS 126
11.3 OPTIMIZATION GUIDELINES FOR DEHYDRATION, SWEETENING, AND NGL RECOVERY 127

12. ENVIRONMENTAL ISSUES WITH NGPPS 129

12.1 MAIN ENVIRONMENTAL ISSUES 129

13. UNDERSTANDING GAS PROCESSING VALUE CHAIN 131

13.1 UTILITY GAS CONSUMPTION 131
13.2 PROCESSING COMPONENT OF NATURAL GAS PRICING 132

14. CONCLUDING COMMENTS 132

APPENDIX 133

Figures

Figure 3-3-1: Two-Phase Vertical Separator....7
Figure 3-3-2 Single Tube Horizontal Separator....8
Figure 3-3-3 Dual Tube Horizontal Separator....9
Figure 3-3-4 Spherical Two Phase Separator....10
Figure 3-3-5 Glycol Dehydration (Absorption)....13
Figure 3-3-6 Typical Amine Plant Process Flow Diagram....17
Figure 3-3-7 Typical Sweetening Plant Layout....18
Figure 3-3-8 Claus Sulfur Recovery Process Flow....20
Figure 3-3-9 WSA Acid Process....21
Figure 6-6-1 Natural Gas Industry Value Chain....29
Figure 6-6-2 Typical Block Diagram For Conceptual Process Design....30
Figure 6-6-3 Typical Block Diagrams....31
Figure 6-6-4 Simplified PFD....32
Figure 6-6-5 Typical PFD....33
Figure 6-6-6 Typical Process Simulation Diagram....33
Figure 6-6-7 Typical Plant Layout....34
Figure 6-6-8 Typical Simplified P&Id....35
Figure 6-6-9 Typical Operating Department Structure....41
Figure 6-6-10 Operator Shift Log....52
Figure 6-6-11 Examples Of Confined Spaces....68
Figure 6-6-12 Example of Cramped Area Confined Space....69
Figure 6-6-13 Hazardous Atmosphere Testing Equipment....70
Figure 6-6-14 Combustion Monitor....72
Figure 7-7-1 “Domino or Swiss Cheese” Accident Model....74
Figure 7-2 Job Hazard Analysis Form (JHA)....77
Figure 7-3 Permit To Work Form....79
Figure 7-4 Hazop Review Flow Process....82
Figure 7-7-5 Sample Audit Form....97
Figure 8-8-1 Inventory Management Cycle....100
Figure 12-1 Environmental Management Compliance Pyramid....130

Tables

Table 2-1 Operational Excellence 4
Table 3-1 Comparison of Separator Types 11
Table 3-2 OSHA H_2S Effects at Exposure Concentrations 15
Table 5-1 Class Location Designations U.S. Code Part 192 24
Table 5-2 Design Factor Comparison for Major Codes 25
Table 6-1 Maintenance Strategy 49
Table 6-2 Personnel Safety And Process Safety Programs 64
Table 6-3 OSHA H_2S Effects At Exposure Concentrations 66
Table 7-1: Risk Matrix 86
Table 7-2 Likelihood of an Unfavorable Event 88
Table 7-3 Risk Level Severity 89
Table 8-1 Typical Spare Parts And Consumables 99

Acronyms and Abbreviations

AGE	Afghan Gas Enterprise
ANSI	American National Standards Institute
API	American Petroleum Institute
ASME	American Society of Mechanical Engineers
B-P	Butane-Propane
BTU	British Thermal Units
C	Celsius
CNG	Compressed Natural Gas
CO_2	Carbon Dioxide
DOT	Department of Transportation
EMS	Environmental Management System
EMP	Environmental Management Plan
F	Fahrenheit
GPA	Gas Processors Association
HC	Hydrocarbon
H_2S	Hydrogen Sulfide
H_2SO_4	Sulfuric Acid
HSE	Health Safety and Environmental
ISO	International Standards Organization
JIT	Just in Time
LNG	Liquefied Natural Gas
LOTO	Lockout/Tag Out
LG	Liquefied Gases
LP	Liquid Propane
MCS	Material Control System
MDEA	Methyldiethanolamine
MRO	Maintenance and Repair Organization
MSA	Master Sales Agreement
MSDS	Material Safety Data Sheet
NACE	National Association of Corrosion Engineers
NFPP	Northern Fertilizer and Power Plant
NGL	Natural Gas Liquid
OPCO	Operating Company
P&ID	Piping and Instrumentation Diagrams
PFD	Process Flow Diagram
ppm	parts per million
psig	pounds per square inch gauge
QA	Quality Assurance
QC	Quality Control
PO	Purchase Order
RFI	Request for Information
RFQ	Request for Quotation

ROI	Return on Investment
SCM	Supply Chain Management
UT	Ultra Transducer
TEG	Triethylene glycol
TREG	Tetra ethylene glycol
WSA	Wet Gas Sulfuric Acid

1. Executive Summary

This report is the first in a series of reports intended to inform the processing segment of the natural gas value chain. Although the report focuses on "best practices" for quality in natural gas processing, the reader must understand that the term "best practices" is really a misnomer in the natural gas sector. The best in class gas companies are well-versed in international standards and specifications as a rule. One could argue, therefore, that they must be adhering to "best practices". It is true that every natural gas plant operation must adopt and adhere to appropriate standards and codes. The discriminator, however, is the requisite commitment to a culture of safety and zero incidents. This can only be achieved when quality assurance and quality control is inherent in every component of gas processing. In a sense, it must be ingrained in every worker regardless of position. Not only should personnel be comfortable in stopping an unsafe condition regardless of impact to profit, it should be an expectation. Safety first, followed by an understanding of what it takes to be efficient and to ensure that process optimization occurs, are fundamental guidelines for a natural gas processing division of a gas company or standalone midstream company.

Afghanistan is in a unique position in that they currently possess modern midstream processing equipment and a present demand for natural gas which exceeds supply. While it might be tempting to rapidly commence the production and subsequent increased sale of natural gas, the items covered in this report represent the bare minimums that must be considered prior to establishing even small scale commercial processing operations. From the basics of personal protective equipment (PPE) to the understanding of process control, Afghan Gas Enterprise (AGE) must be prepared to deliver gas to suppliers who will not tolerate anything less than a quality product and a dedication to safety. Furthermore, there must be a universal understanding that modern off takers of gas will expect a consistent and standard product for which they are willing to pay the agreed upon price per million cubic meters or square cubic feet.

Widespread understanding of the fiscal (and other) consequence resulting from the inability to deliver the contracted amount of gas or delivery of off-spec gas should be an expectation of all supervisors. Thus, the notion of "best practices", rather than a prescription of rules, specifications or standards to follow, becomes more of a culture that results in a commitment to quality and efficiency. The standards and specifications are the very basics and must be a part of every subset of operations and maintenance. Once the greater idea of "best practices" is understood and adopted, the approach to maintenance, consumables, parts procurement, sampling, etc., will no longer be reactive but a part of a greater focus on quality. Such a focus will not only result in rapid maturation of the natural gas processing component, but it will guarantee that Afghanistan becomes recognized as a quality producer of natural gas.

The subjects detailed in this report were chosen because they are areas that should be immediately addressed by AGE or its successor. It is not meant to be a step-by-step prescription or itemization of best practices, rather the subject matter is a collection of principles that should be addressed in the short-term in order to guarantee the best possible chance of success in gas processing.

This report has been developed from information clearly and readily available in the public domain supplemented with additional information based on the knowledge and experience of the report authors who are solely responsible for its content.

2. Introduction and Scope

2.1 Purpose of Report

The processing component of natural gas also known as the "midstream" is often given the least amount of attention by the media and other outside entities as compared to the upstream/well head facilities or transmission pipelines and associated distribution networks. This is interesting as the processing component is the critical linkage in the gas value chain where natural gas undergoes multiple processes in order to be converted to pipeline-quality natural gas. The quantitative definition of pipeline-quality natural gas often varies with specific terms and conditions of a gas purchase agreement, tariff or regulatory bodies. The qualitative definition, however, is universal and can be summarized as the processing of natural gas in order to optimize the heating/energy value and therefore produce the greatest sales volume. A short sited view of this critical element of natural gas production can result in lost revenue, off specification gas and potential tragedy from explosion, spills, or environmental contamination.

Given the importance of efficient and safe natural gas processing, it becomes essential that adherence to quality in operations, maintenance, safety, testing, etc. becomes the industry norm. While many companies, private and public alike, abide by standard safety and quality program, the leaders in the field understand and incorporate quality assurance (QA) and quality control (QC) programs into all aspects of their operations. This report will detail some of the best practices in QA/QC as applied to Afghanistan and its nascent gas sector.

2.2 "Best Practices"

"Best practices" are often a collection of industry-accepted norms and processes that, when followed; provide the greatest opportunity for safe, efficient and responsible operations. With a focus on natural gas processing, many of the norms and processes accepted around the world are governed by standards and codes. In developing nations such as Afghanistan, where an established regulatory system and associated standards are either immature or not yet developed, the optimal growth rate for the natural gas processing component of the value chain can be modulated by the correct utilization and adaptation of international best practices.

Some argue that the easiest way to communicate best practices is by simply copying international standards and codes and providing them to the relevant gas company that is responsible for gas processing. At face value, this would certainly be the simplest route, and if decades of lessons learned coupled with the correct alignment of QA/QC with adopted standards and practices did not matter, it would be the correct approach for Afghanistan. The fact is that midstream natural gas processes have undergone many changes over the years both in design and operations. Simple adaptation of the most applicable international code is certainly part of the answer. However, the full answers include understanding and adaptation of the best practices and where applicable, modification of rote standards and codes to meet the exact conditions of the industry. A developing industry must focus on QA/QC as related to best practices with a focus on safety, process optimization, operations and maintenance.

In the interest of providing the most comprehensive summary and discussion of gas processing best practices, an extensive literature search was performed. Multiple documents used in actual gas processing operations around the world have been included in the appendix to this report. These documents are provided mainly as examples of best practices which could be amended as conditions change in Afghanistan. If any of the documents in the appendix are used in their entirety, it is recommended that the latest versions be purchased and maintained through periodic updates.

2.3 Focus on a New Entity with Dated or Limited Experience

Over the last two decades, AGE has delivered gas to the cities of Sheberghan and Mazar e Sharif, small villages and the deteriorating Northern Fertilizer and Power Plant (NFPP) in Mazar-e-Sharif. Much of the abandoned Soviet infrastructure remains in place, but AGE has had to invoke extremely primitive and certainly nonstandard processes to ensure some level of natural gas supply. The recent installation of modern midstream equipment along with new line pipe and other equipment will provide AGE with the capability to increase their processing, and thus their gas delivery capacity. However, stringent QA/QC integration into a revamped set of standards/codes based on best practices must precede any processing increase.

AGE has a corporate culture that is based on some of the lessons learned during the years under Soviet control. Many of the engineers performed very basic functions and found themselves in charge of all aspects of the gas supply chain when the Soviets left Afghanistan in the late 1980's. The current AGE operation is based on piecing parts together to continue operations, dated and little to no processing capacity except for limited liquid separation. To take an entity that has operated with little regard to safety and modern processes and attempt to develop a culture of safety and quality is a difficult process in even the most developed company. The good news is that AGE can be considered a 'clean slate' where the best practices can be incorporated to ensure that a new AGE can operate safely and efficiently.

2.4 Focus International Best Practices Tailored for Afghanistan

Modern companies engaged in natural gas processing embrace safety as a foundation for 100% of their activities. As the gas sector matures in Afghanistan, safety and risk mitigation must form the basis for any QA/QC practices adopted by the AGE. In Afghanistan, where the primary focus has been on continuation of supply, the task of developing a culture of safety can only be achieved by development and strict adherence to best practices. If done correctly, a robust QA/QC program will strongly support the work of developing the safety culture within AGE.

While safety is a guide for all activities in gas processing, the idea that production and profit sometimes compete with safe operations cannot be overlooked. Additionally, there are situations that require decisions that may or may not be discretely described in a specification or standard. Best practices that are adopted in Afghanistan must contemplate that safety and solid risk mitigation procedures must trump any consideration for production. Time and time again, a bore sighted focus on production/profit over anything else is a mistake that will result in tragedy.

In addition to a maintaining a solid safety foundation, most companies seek constant improvement in all of their health, safety and environmental (HSE) processes. The Chevron Company, as an example, strives to have incident-free operations as a basic premise. Further, they abide by a system of operational excellence which is utilized to manage areas of HSE, reliability, and efficiency as critical drivers for their business success.

Looking across the industry, we find that while Chevron may have different terms, the principles are universal. Adherence to operational excellence and the sustained achievement of incident-free operations is the consummate definition of "best practices" and it must drive the thought processes from the most senior executive to the junior laborer in the field. Chevron takes the additional step, like most companies, to lay out an overarching strategy to guide their operations. The definition of such basic principles is really nothing more than a "catch-all" to cover those situations where specifications, standards, processes, etc. may not necessarily provide discrete guidance. Chevron mandates the following tenets:

Table 2-1 Operational Excellence

Chevron's Operational Excellence Tenets of Operation	
We Believe:	All incidents are preventable.
Two Key Principles:	• Do it safely or not at all. • There is always time to do it right.
We ALWAYS:	1. Operate within design and environmental limits. 2. Operate in a safe and controlled condition. 3. Ensure safety devices are in place and functioning. 4. Follow safe work practices and procedures. 5. Meet or exceed customers' requirements. 6. Maintain integrity of dedicated systems. 7. Comply with all applicable rules and regulations. 8. Address abnormal conditions. 9. Follow written procedures for high-risk or unusual situations. 10. Involve the right people in decisions that affect procedures and equipment.

It is most interesting to note that nowhere in these tenets of operation is there a mention of production or profit. The focus is on incident-free operations over anything else. Chevron guides their operations by adhering to the ten tenets to guide decision making, work planning, and execution in ALL situations. The contents that follow will detail specific best practices, but these tenets coupled with a genuine commitment to incident-free operations are the stepping stones to processing QA/QC and overarching best practices.

3. Types of Natural Gas Processing

Natural gas, as it is produced from the wellhead, is composed primarily of methane, together with smaller percentages of other heavier hydrocarbons (HCs), which may include ethane, propane, normal butane, iso-butane, normal pentane, iso-pentane, hexane and other heavier HCs. It may also contain water, water vapor, other gases; such as carbon dioxide (CO_2), nitrogen, oxygen and other dangerous impurities such as hydrogen sulfide (H_2S). Although some natural gas is produced from the wellhead in a form that is immediately usable, most natural gas produced from wellheads contains some of these additional elements, which can be detrimental to the transportation, safety, or ultimate use of the gas. In order to safely and/or economically transport and utilize the gas, processing or treating the natural gas is necessary. The gas remaining after treating is commonly referred to as "pipeline quality gas".

Pipeline quality gas is generally considered to have the following properties:

- A specific British Thermal Units (BTU) content ranging between 985 and 1085 BTU per cubic foot of gas.
- Be delivered at a specified HC dew point temperature level below which any vaporized gas liquid in the mix will tend to condense at pipeline pressure
- Contain no more than trace amounts of H_2S, CO_2, nitrogen, water vapor and oxygen
- Be free of particulate solids and liquid water that could be detrimental to the pipeline and pipeline equipment.

In order to achieve pipeline quality natural gas, the gas must be treated or processed to remove undesired elements. The primary types of natural gas processing include the following:

- Separation
- Dehydration
- Natural Gas Treating

3.1 Separation

Many wells that produce liquid HCs (crude oil or condensate) also produce associated natural gas. Where most liquid HCs are stable at atmospheric pressure and temperatures, such that it can be stored and or transported in tanks, railcars or trucks, natural gas is lighter than air at atmospheric pressure and temperatures and must either be collected and transported by pipeline or be flared. Similarly, most natural gas wells produce some quantities of liquid HCs and water. Separators are designed to separate the natural gas from the liquids including water and liquid HCs.

Separators may be either two phase or three phase. A two phase separator is designed to separate liquids from the gas stream or in the case of an oil well, to separate the gas from the oil being produced. A three phase separator also separates water from the liquid HCs. Where the production is primarily liquid HCs/oil, separation normally occurs at or very near to the wellhead. Two phase separation of liquids from flow streams that are primarily gas may be located at the wellhead, but may also be located at compressor stations, meter stations and gas treating facilities.

3.2 Separator Components

Although separators are designed in many configurations, all separators work on the same basic principle and include the following:

- A cylindrical inlet device: The flow is injected into a cylindrical or spherical vessel so that the linear motion of the gas liquid flow is stopped and a centrifugal acceleration is established inside the vessel. This acceleration results in a force of up to 500 times the force of gravity. This centrifugal force draws the liquid to the outside walls of the vessel where the liquid droplets are forced together and eventually fall to the bottom of the vessel. The gaseous part of the flow continues out the top of the vessel. The vast majority of the separation process occurs during the acceleration of the fluid in the upper portion of the vessel.
- A large settling section: This section must be of sufficient length or height to allow the liquid droplets to settle out of the gas stream and with adequate surge room for slugs of liquids. The settling section allows the turbulence in the fluid stream to subside and gives more time for entrained gas to bubble through the liquid. The design of the additional space in the lower part of the separator vessel for liquid slugs or surges is dependent on the size of liquid slugs likely to occur. Obviously, separators at the wellhead are more likely to experience slugs, but each application should be analyzed to determine what size liquid slug could be experienced and the downstream effect of allowing a slug of liquid to get past the separator. This could be particularly important where the gas stream is flowing into a natural gas compressor or sensitive customer process.
- A mist extractor: Wire mesh or vanes located near the gas outlet of the vessel allow small liquid particles that did not settle out by gravity or the centrifugal acceleration to coalesce and fall to the bottom of the separator.

- **Liquid level controls:** Level control devices are required to allow for evacuation of the liquids from the bottom of the separator. These will include a dump valve, liquid level control instrumentation that monitors the liquid level and signals the dump valve to open until a sufficient amount of the liquid has been drained, a site or gauge glass and a storage or disposal facility to handle the liquid HCs and water removed by the separator

Three phase separators are used where oil or condensate are being produced along with water and gas. This is normally only at oil wells. A three phase separator works the same as the two phase separator, but with the additional feature of removing water which is heavier than HCs. A three phase separator requires two sets of level control equipment.

3.3 Separator Types

There are four major types of basic separator configurations that are generally available from a number of manufacturers worldwide:

- Vertical Separators
- Horizontal Single Tube Separators
- Horizontal Dual Tube Separators
- Spherical separators

Vertical Separators

Vertical Separators can be used with high or low pressure applications. They are most effective where the ratio of gas to liquids is high. Due to the vertical distance from the inlet to the gas outlet, vertical separators tend to be less susceptible to liquid carry over due to slugs of liquids entering from production. Since the liquid level controller is a greater distance from the gas outlet, it is less difficult to control. The illustration below depicts a two phase vertical separator, where gas, oil and water are separated.

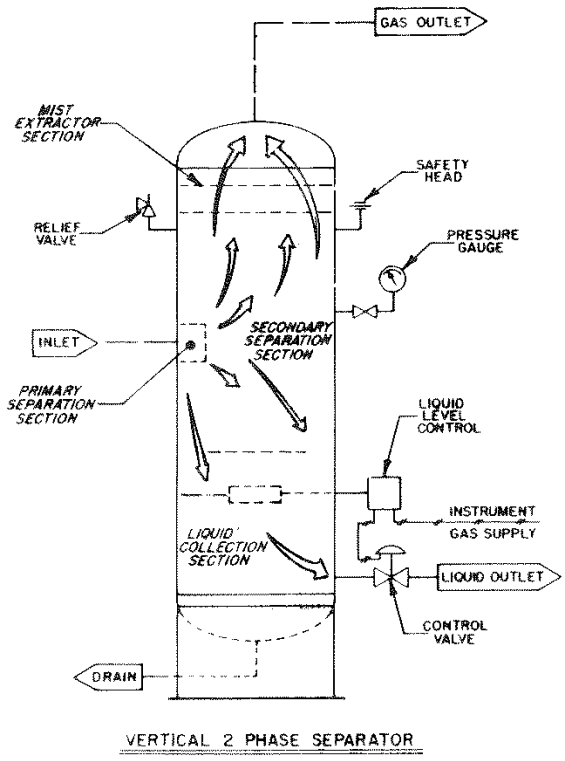

Figure 3-3-1: Two-Phase Vertical Separator

Vertical separators tend to be larger in diameter than horizontal separators. In high pressure applications, the larger diameter requires additional steel thickness, which results in additional weight and costs. They are also more difficult to transport when skid mounted due to their height. Vertical separators do have an advantage in that they require a smaller foot print, which can be particularly valuable where space is at a premium such as in plants and offshore installations.

Horizontal Separators – Single Tube

Horizontal separators are also well suited for high gas to liquid ratios, but have the additional advantage of a large gas to liquid interface. This allows additional time for gas that is entrained with the liquid to bubble up to the surface, thus enhancing separation. The horizontal separator is much simpler to fabricate and to skid mount. The smaller diameter cylinders required for the same gas capacity results in less steel and less fabrication costs.

The liquid level control is more critical and tends to reduce the space allowed for slugs of liquid. A typical arrangement for a single tube horizontal separator is shown in Figure 3-2 below.

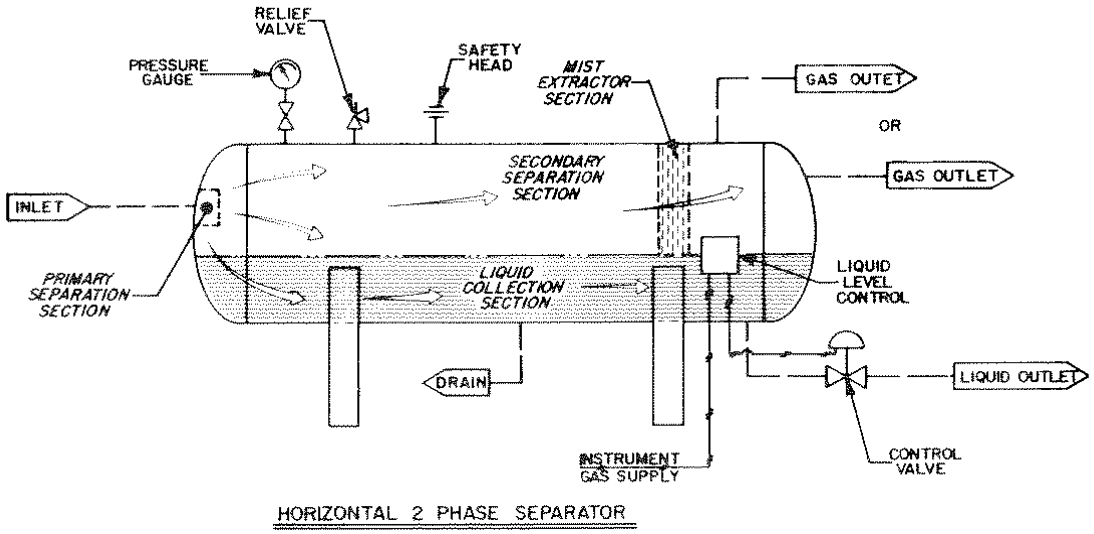

Figure 3-3-2 Single Tube Horizontal Separator

Dual Tube Horizontal Separator

Dual tube configurations of the horizontal separator are better at allowing additional interface, but due to the second tube and multiple connections are more expensive to fabricate. A typical arrangement for a double tube horizontal separator is shown in Figure 3-3 below.

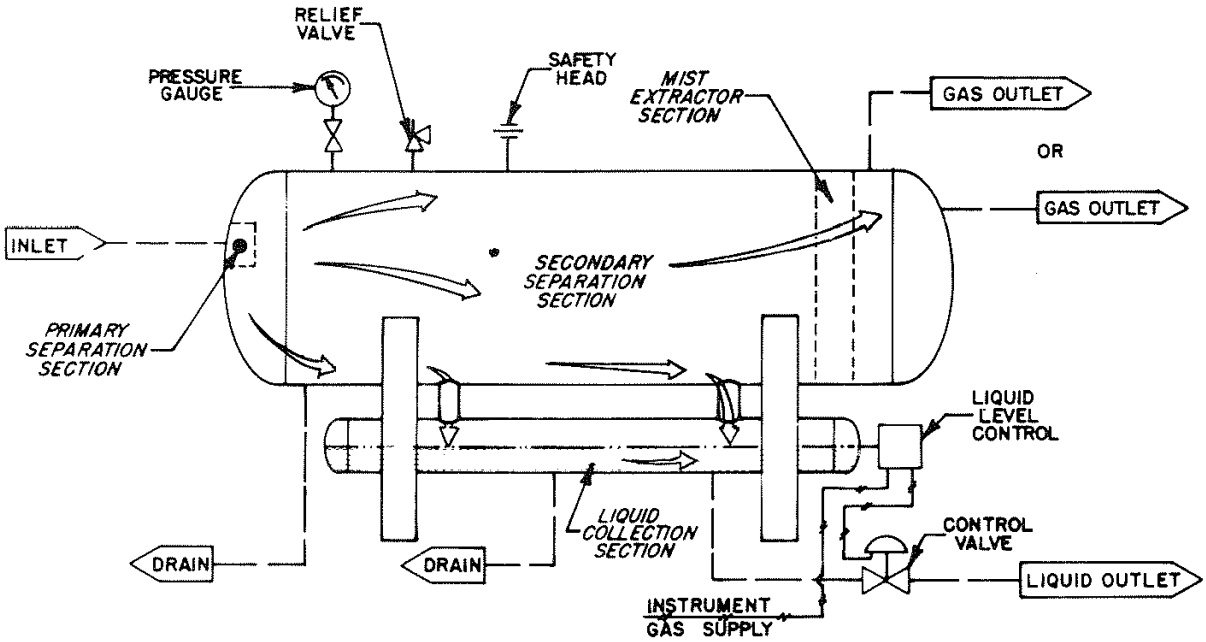

Figure 3-3-3 Dual Tube Horizontal Separator

Spherical Separators

Spherical separators are inexpensive and compact compared to horizontal or vertical separators. However, spherical separators are not well suited for high volumes or most high pressure installations. Due to the spherical shape, the liquid level control has a very narrow band of operations which can easily result in blowing gas through the dump valve system. The spherical separator also offers very limited space for slugs. A typical arrangement for a spherical two phase separator is shown in Figure 3-4 below.

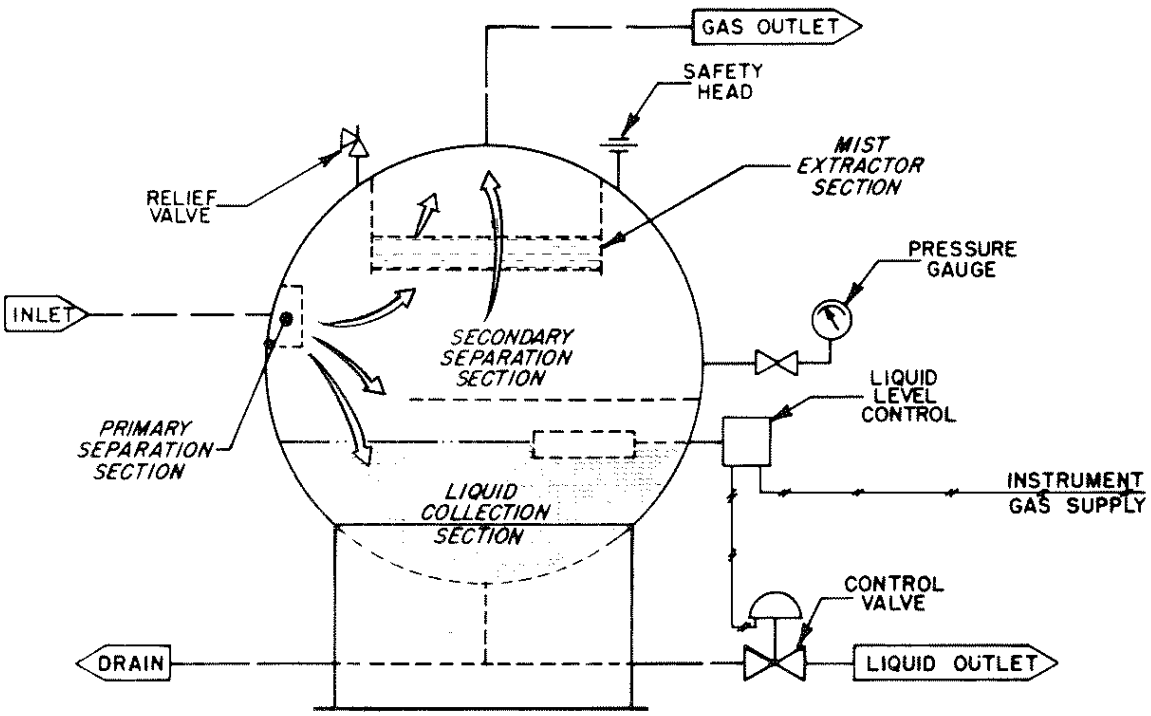

Figure 3-3-4 Spherical Two Phase Separator

Table 3-1 Comparison of Separator Types

SEPERATOR TYPE	ADVANTAGES	DISADVANTAGES	IDEAL USE
VERTICAL	Small footprint saves space Better surge control Liquid level control is less critical Easier to clean Less tendency to re-vaporize liquid into gas phase due to longer vertical distance	It takes a longer diameter separator for a given capacity More expensive to fabricate Difficult to ship on a skid due to height	Low to intermediate gas to oil ratio where relatively large slugs may be expected
HORIZONTAL	Can handle higher gas to oil ratio well streams Cheaper than a vertical separator Easier and cheaper to ship. Requires fewer field connections Reduces turbulence and foaming when handling crude oil	Requires more space than a vertical separator Liquid level control is more critical Surge space for slugs is more limited More difficult to clean out	High gas to oil ratio Good at handling foaming crude oil Best at handling a diverse range of saturations.
SpHERICAL	Very inexpensive Good for low or intermediate gas to oil ratio Very compact and easy to install Easy clean out	Very limited liquid settling section Not good for three phase flow Very limited surge / slug capacity	Low gas to oil ratio and preferably two phase only

Separator Sizing

It is recommended that separators be sized in accordance with American Petroleum Institute (API) Specification 12J. The Seventh edition of API 12J is included in the appendix as a reference.

3.4 Dehydration

Dehydration of natural gas is defined as the removal of water that is associated with the natural gas in the form of vapor entrained with the natural gas. Dehydration of the gas stream is necessary for the efficient operation of gas transmission pipelines. The removal of water vapor prevents the formation of natural gas hydrates, which can block the pipeline. Water within the pipeline can also encourage corrosion, especially where CO_2 or H_2S are in the gas stream. Water vapor also tends to become free water as temperature drops and collects in low spots on the pipeline causing significant effects on pipeline efficiency.

There are four main methods of natural gas dehydration:

- Refrigeration
- Membrane processes

- Adsorption
- Absorption

3.4.1 Refrigeration involves rapidly lowering the gas pressure to cool the gas. Water vapor then tends to liquefy and can be removed by a separator. In general, this process will not remove enough of the water from the gas stream to obtain pipeline quality gas. Therefore, when used it is generally used in combination with one of the other methods.

3.4.2 Membrane processes are only economical for small gas flows, such as a requirement for instrument gas or fuel gas for other process equipment. It is not feasible to use with more significant gas flow volumes.

3.4.3 Adsorption generally yields the lowest water content. This process is done with a two bed system, where the beds are filled with adsorbents such as silica gel. The gas flow is passed through one of the beds, where the adsorbent removes the water from the gas. When the adsorbent nears saturation the gas stream is then switched to the other bed. Hot dry gas is then blown through the first adsorber. The gas is then cooled so that the water vapor condenses and drops out in a separator.

The efficiency of the process depends on the absorbent used, but is generally not economical at higher flows. Adsorbents are generally more expensive than absorbents (glycol) and require more energy to regenerate.

3.4.4 Glycol dehydration (absorption) is the most commonly used method of natural gas dehydration. Glycol has the advantages of having a high affinity for water vapor, is non-corrosive and is fairly easy to regenerate with low chemical losses.

Several different forms of glycol are used in absorption dehydration including:

- Triethylene glycol (TEG)
- Tetra ethylene glycol (TREG)
- Monoethylene glycol
- Diethylene glycol

TEG and TREG have the best absorption properties and can be regenerated at higher operating temperatures, with TREG having the best overall properties for removal of water from the gas stream. However, due to the cost differential, TEG is most commonly used as providing the best overall efficiency based on operating costs.

The glycol dehydration process is shown in Figure 3-5 below. Wet gas is injected into the bottom of an Absorber Column, also known as a Contactor, while lean or dry glycol is injected near the top. The glycol then cascades over a number of trays within the contactor, comingling the glycol with the gas stream; the lean glycol has an affinity for water vapor, which bonds with the glycol. The now dry gas passes out the top of the contactor, generally through a heat exchanger to lower the temperature of the lean glycol before it is injected into the absorber column. Glycol has more affinity for water at lower temperatures.

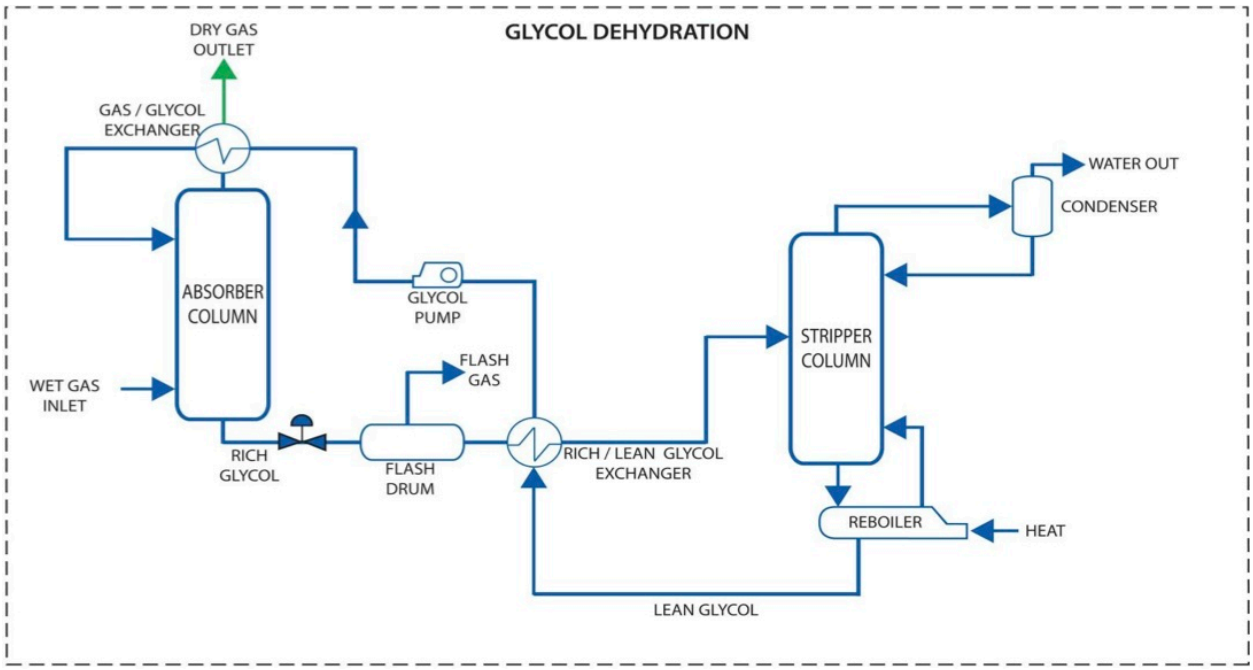

Figure 3-3-5 Glycol Dehydration (Absorption)

The wet or rich glycol, which now includes the water vapor removed from the gas stream passes out the bottom of the contactor through a flash tank where gas entrained with the glycol is collected. It then passes through a heat exchanger to further cool the incoming lean glycol.

The rich glycol then flows into a regenerator or stripper column, which is mounted on top of the "reboiler." The stripper column is packed with a ceramic packing. The rich glycol flows down the stripper column into the reboiler, where it comes into contact with rising hot glycol which has been heated in the reboiler to a temperature where the entrained water will vaporize and travel up the still column through an atmospheric reflux condenser before being released to the atmosphere.

For TEG glycol systems, the glycol can be heated to a maximum of 400° Fahrenheit (F) or 204° Celsius (C), which ensures that virtually all of the water contained within the rich glycol is vaporized. (98.6% purity) The now lean glycol can be stored or recirculated through the system.

If additional purity of the glycol is needed for more gas drying capacity, the purity can be increased up to 99.6% by adding stripping gas to the reboiler. A small amount of gas from the fuel gas system is injected into the bottom of the reboiler through a spreader system. This stripping gas will "roll" the glycol in the reboiler to allow any pockets of water vapor to escape which might otherwise remain in the glycol due to its normal high viscosity. This gas will also sweep the water vapor out of the reboiler and stripping still and by lowering the partial pressure of the water vapor in the reboiler and the still column, allow the glycol to be concentrated to higher percentages.

The regeneration system operates at just above atmospheric pressure to keep air out of the system. Glycol is circulated by means of pumps that may be powered by the pressure of the rich glycol or electricity.

Efficiency of Dehydration

The efficiency of any gas hydration is measured by the water content in the dry gas. The dew point is the temperature at which the water vapor remaining in the gas stream will begin to liquefy. The dew point, therefore, needs to be below the lowest anticipated operating temperature which can be expected within the pipeline.

Sizing Considerations

Sizing of a dehydration unit is based on the capacity of the gas stream to hold water vapor and the desired dew point of the resulting gas. The capacity of the gas stream to hold vapor is based upon its temperature and pressure.

Therefore the principal sizing parameters for natural gas dehydration include the following:

- Operating pressure maximum and minimum
- Operating temperature maximum and minimum
- Inlet water content
- Required outlet water content
- Atmospheric temperature ranges
- Availability of electric power

These parameters will determine the following:

- Height and diameter of contactor tower
- Circulation capacity requirements for glycol
- Pump type

3.5 Natural Gas Treating

Natural gas containing high levels of H_2S can cause illness and death in relatively small concentrations. H_2S is colorless and in small quantities has an odor similar to rotten eggs. Upon inhalation, H_2S very rapidly paralyzes the olfactory nerve which effectively kills the sense of smell as a warning indicator. It is heavier than air, having a specific gravity of 1.1, which causes it to concentrate in low areas, rather than dissipating into the air.

The table below, published by the United States Occupational Health and Safety Administration (OSHA), examines the effects of different H_2S concentrations. The following symptoms or side effects can/will occur at various concentrations. Concentration levels are measured in parts per million (ppm)

Table 3-2 OSHA H_2S Effects at Exposure Concentrations

Concentration (ppm)	Symptoms/Effects
0.00011-0.00033	Typical background concentrations
0.01-1.5	Odor threshold (when rotten egg smell is first noticeable to some). Odor becomes more offensive at 3-5 ppm. Above 30 ppm, odor described as sweet or sickeningly sweet.
2-5	Prolonged exposure may cause nausea, tearing of the eyes, headaches or loss of sleep. Airway problems (bronchial constriction) in some asthma patients.
20	Possible fatigue, loss of appetite, headache, irritability, poor memory, dizziness.
50-100	Slight conjunctivitis ("gas eye") and respiratory tract irritation after 1 hour. May cause digestive upset and loss of appetite.
100	Coughing, eye irritation, loss of smell after 2-15 minutes (olfactory fatigue). Altered breathing, drowsiness after 15-30 minutes. Throat irritation after 1 hour. Gradual increase in severity of symptoms over several hours. Death may occur after 48 hours.
100-150	Loss of smell (olfactory fatigue or paralysis).
200-300	Marked conjunctivitis and respiratory tract irritation after 1 hour. Pulmonary edema may occur from prolonged exposure.
500-700	Staggering, collapse in 5 minutes. Serious damage to the eyes in 30 minutes. Death after 30-60 minutes.
700-1000	Rapid unconsciousness, knockdown, or immediate collapse within 1 to 2 breaths, breathing stops, death within minutes.

Natural gas containing four parts per million (4 ppm) or less is generally considered to be “pipeline quality sweet natural gas” by U.S. gas transmission and distribution companies. Some jurisdictions, such as the Texas Railroad Commission, allow concentrations as high as 100 ppm to be considered as sweet gas. Natural gas with higher concentrations of H_2S is referred to as “sour natural gas.” When H_2S is combined with CO_2, as is often found in natural gas well streams, the combination creates what is termed “acid gas”. Acid gas, in addition to being deadly as described above is very corrosive to steel.

In order to safely transport and utilize natural gas with high H_2S or H_2S combined with CO_2, it is necessary to remove the harmful components. There are several methods of removing H_2S and CO_2 from natural gas flow streams. This process is often referred to a Sweetening.

There are a number of processes that can be used for sweetening natural gas. Depending on the relative quantities of H_2S and CO_2 in the gas stream, one or more methods of removal of these components may be preferable to another. The most common methods of H_2S and CO_2 removal from natural gas are as follows:

- Amine Treatment Plant Processes
- Iron Sponge Processes
- Proprietary Processes
- Claus Process for Sulfur Recovery

Amine Treatment Plant Processes

The alkanolamine treatment process is the most commonly used process to sweeten natural gas. These are commonly referred to as "amine" treatment processes or plants. The most common alkanolamines used are

- Monethanolamine
- Diethanolamine
- Methyldiethanolamine (MDEA)

Other amines that are less often used include:

- Diisopropanolamine
- Aminoethoxyethanol (Diglycolamine)

Amines are used in an aqueous solution. The selection criteria and concentration level of the amine type is based on the ratio of H_2S to CO_2 in the gas stream and the concentrations of each. Regardless of which amine is chosen for the gas stream conditions, the sweetening process is essentially the same. It is detailed below in Figure 3-6,

The sour natural gas normally runs through an inlet scrubber to remove any slugs of liquid, liquid HC, grit or sand from the gas stream. After the scrubber the gas is introduced into the bottom of an absorber or contactor tower. Lean amine (amine that has been stripped of H_2S and CO_2) is injected into the top of the tower. The tower includes a series of trays to increase the time for comingling the amine with the sour gas. Each tray has a liquid amine level of 2-3 inches (5-8 centimeters) maintained by a weir. The gas passes up from underneath the tray though openings in the trays causing it to bubble through the liquid forming froth. The H_2S and CO_2 are absorbed by the lean amine in the trays. The gas flows out the top of the contactor tower as sweet gas.

The now rich amine (amine that has absorbed H_2S and CO_2) is run through a flash tank separator to remove any natural gas that may have carried over in the rich amine. Any liquid HCs are removed via conventional oil/water separation in this separator and the rich amine is drained from the bottom of the flash tank separator. Separation of the HCs also helps to prevent foaming due to HCs in the amine.

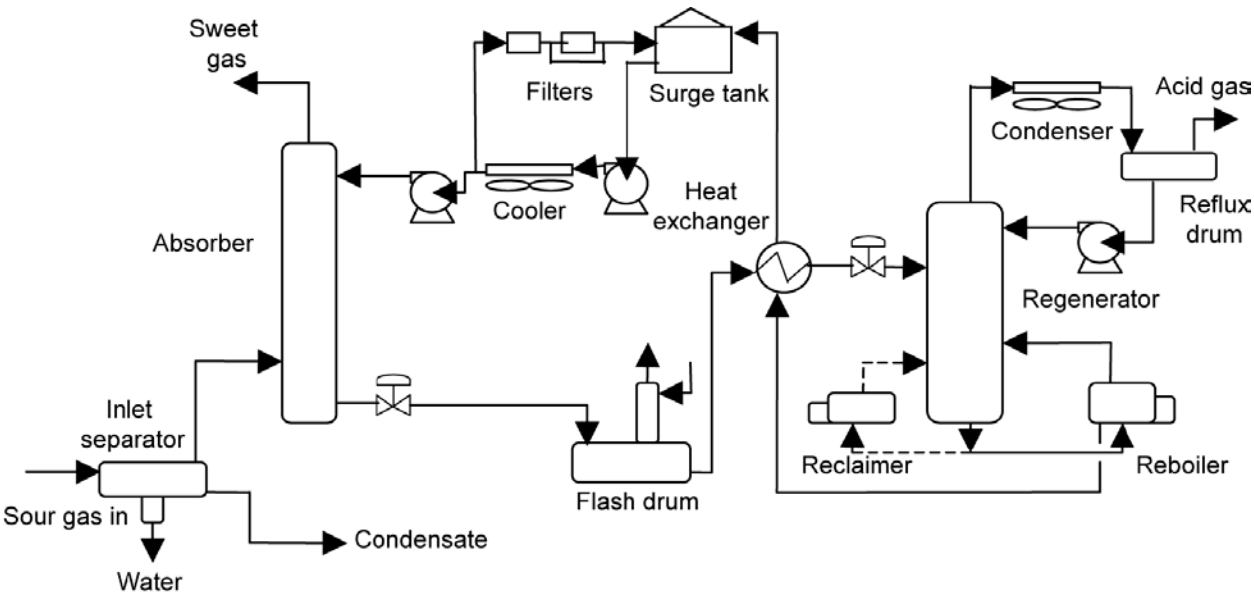

Figure 3-3-6 Typical Amine Plant Process Flow Diagram

The rich amine is then preheated by a heat exchanger utilizing heat from the lean amine, which must be cooled before being reinjected to the contactor. The rich amine is injected into the top of a stripper column ("regenerator") which is packed with trays. As the rich amine flows down through the regenerator column, it is met by a gas stream of steam, H_2S and CO_2 that is generated in the reboiler. This lowers the partial pressure of the H_2S and CO_2, causing it to separate from the amine. Overhead gas is passed through a condenser to recover water and the small amount of amine that is vaporized by the regenerator. The condensed liquid and acid gas flow through a reflux drum from which it is pumped back into the regenerator column.

The acid gas containing the concentrated H_2S and CO_2 are sent to a flare, incinerator, reinjection to a depleted well, sulfur recovery or other disposal method.

The lean amine is then sent through a filter followed by an activated charcoal filter to remove any particulate matter that may have been picked up during the process. Depending on which amine is used, the amine may also be sent though a "reclaimer" to further purify the amine. The lean amine is then cooled before being pumped back to the top of the contactor tower to begin the sweetening process again.

A typical layout of a 100 gallon per minute sweetening plant packaged by Zephyr Gas Services (currently constructed in Sheberghan, Afghanistan) is shown below in Figure 3-7 Typical Sweetening Plant Layout.

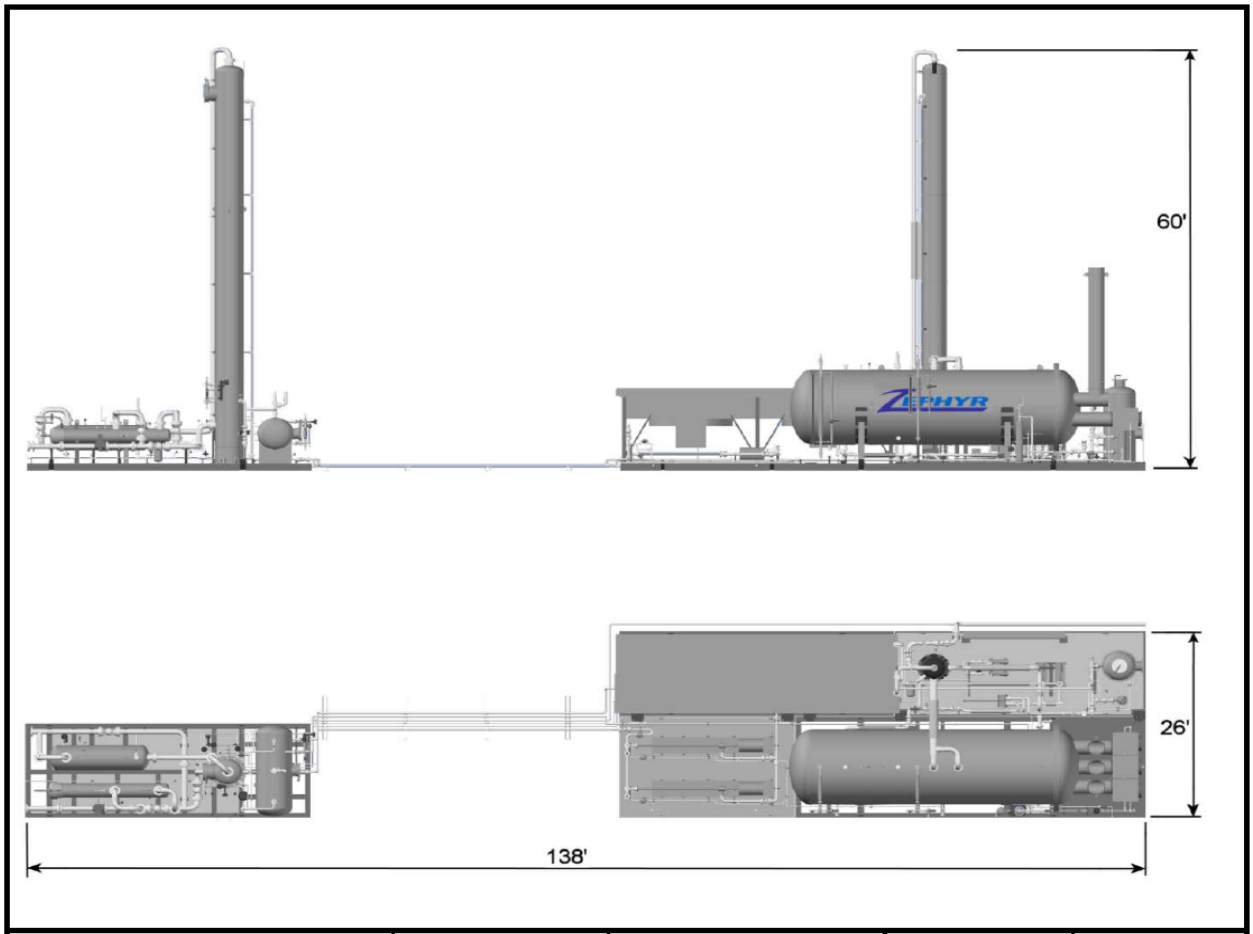

Amine Solution	14,800 GAL	**Amine Front-End Skid**	85,000#	30'-2"x12'-0"
Amine Make Up	1,000 GAL	**Amine Contactor Tower**	50,000#	42"OD x 52'
De-ionized Water Make Up	6,600 GAL	**Amine Pump Skid**	20,000#	18'-8"x10'-0"
Estimated Fuel Gas Consumption	210Mscf/d	**Amine Reboiler Skid**	98,000#	42'-10"x10'-0"
Power Requirement:	460V/3-Phase	**Amine Process Skid**	40,000#	42'-10"x11'-0"
Start Load	456 AMPS	**Amine Still Column**	12,000#	36"OD x 52'
Running Load	214 AMPS	**Amine Cooler Skid**	38,000#	42'-10"x11'-0"
Temporary Power (Generator)	300 Kw	**Vent Scrubber Skid**	2,000#	4' x 6'
Plant Foot-Print	26' x 140'	**Fall-Off Load**	3,800#	*
Foundation Requirement	Flat Level Surface	**Truck / Crane Req.**	8 / 2 - 80 Ton	

Figure 3-3-7 Typical Sweetening Plant Layout

Iron Sponge Process

Where significant quantities of CO_2 are not present in the gas stream, one of the oldest methods of removing H_2S from the gas stream is called an "iron sponge," as the name would imply the iron sponge material soaks up the H_2S from the gas stream.

The Iron Sponge material consists of hydrated ferric oxide impregnated wood chips. The H_2S reacts with the iron sponge, producing iron sulfide and water. The process is temperature sensitive and can only operate effectively between 50°F (10°C) and 120°F (49°C).

The equipment needed for Irons Sponge treatment consists of a vertical vessel filled with iron sponge material. The gas is injected in the top, flowing down through the iron sponge material, forming iron sulfide and sweet gas. The spent iron sponge material may be regenerated by oxidizing the material for reuse, but is less effective each time that it is regenerated. Therefore, it must be replaced on a regular basis. Two separate trains of equipment are necessary for continuous operation.

The iron sponge material is susceptible to fire, particularly when exposed to high levels of oxygen. Once the material is completely spent, it is no longer susceptible to spontaneous combustion and can be safely disposed of in most commercial landfills.

Proprietary Treating Processes

There are a number of proprietary processes for removal of H_2S and CO_2 from gas streams. A few of the processes are described below, however; since new processes are being developed, it is suggested that a more complete search of available technology be made before final selection of any proprietary process for H_2S and/or CO_2 removal be selected.

- SulfaTreat is similar to the iron sponge process, but uses a ceramic base media coated with iron oxide instead of impregnated. Since the ceramic is not flammable, the chances of fire are greatly reduced. Also, the size of the media is smaller and more consistent than the wood chips, allowing the use of a smaller vessel for the same gas flow.
- LO-CAT is a proprietary wet scrubbing redox system that uses a chelated iron solution to convert H_2S in a gas system into elemental sulfur. It does not remove CO_2.
- Heliodor Solutions H_2S removal system is a simplified chemical treatment process that involves a non-regenerative treatment process which results in a non-hazardous spent solution that must be disposed of after use.
- Sulfinol is a proprietary process which has a similar regeneration process to amine processes.

Membrane Technology

Membrane technology involves passing sour gas through a membrane which effectively separates the gas stream into a moderately sweetened gas stream and a H_2S rich gas stream. The moderately sweetened gas stream must then be further sweetened using an Amine unit, iron sponge or other proprietary process. The rich H_2S gas stream is either reinjected into a disposal well or processed in a sulfur recovery plant.

Claus Process for Sulfur Recovery

Where large quantities of H_2S are being removed from the gas stream, where depleted well disposal of the acid gas is not feasible and in locations where local environmental regulations will not allow flaring or incineration of the H_2S, the preferred method of disposal of the H_2S resulting from the sweetening process is recovery of elemental sulfur. The Claus Process is the preferred method. First patented in 1883 by scientist Carl Friedrich Claus, the Claus process has become the industry standard for sulfur recovery.

The Claus process is a multi-step process that converts H_2S and O_2 (H_2S and Oxygen to S and H_2O (Sulfur and Water).The process is detailed below in Figure 3-8.

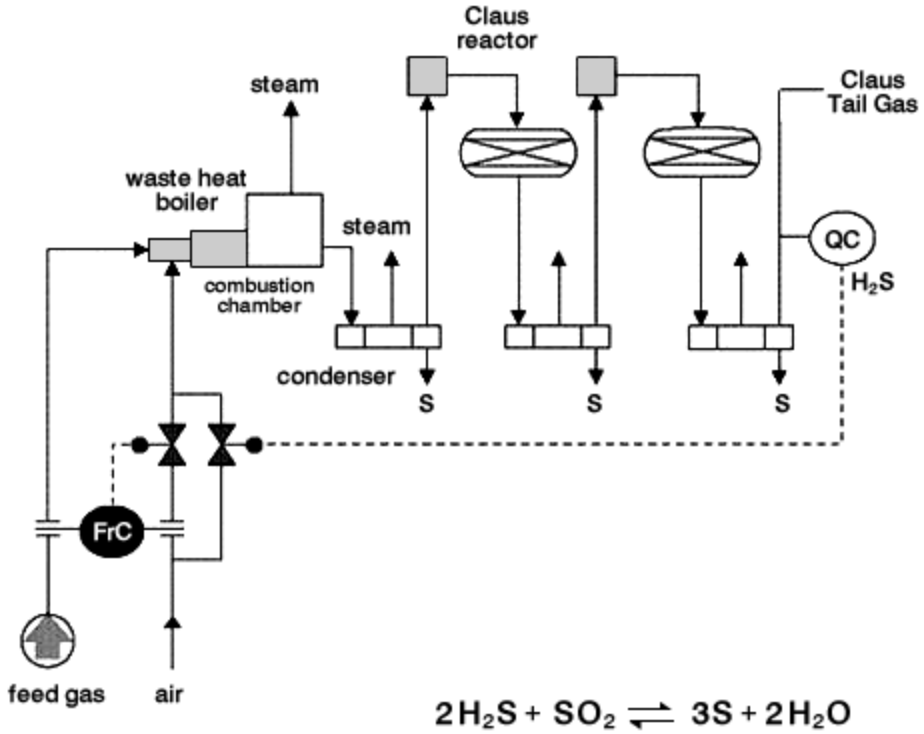

Figure 3-3-8 Claus Sulfur Recovery Process Flow

Wet Gas Sulfuric Acid Process

An alternative to the Claus process for dealing with the high H_2S residual gas is a process called Wet Gas Sulfuric Acid (WSA). WSA uses a catalytic process developed and patented in the late 1980's by Haldor Topsoe. This process converts the H_2S in the saturated residual gas, into commercial quantities of Sulfuric Acid (H_2SO_4). The process also generates a large quantity of super-heated steam that may be used in other processes that may be collocated with the WSA facility to take advantage of the steam by product.

The WSA process recovers over 99% (ninety-nine percent) of the sulfur in the residual gas stream. The H_2SO_4 is useful in many industries, such as fertilizer production.

A process flow diagram (PFD) for the process is detailed below in Figure 3-9.

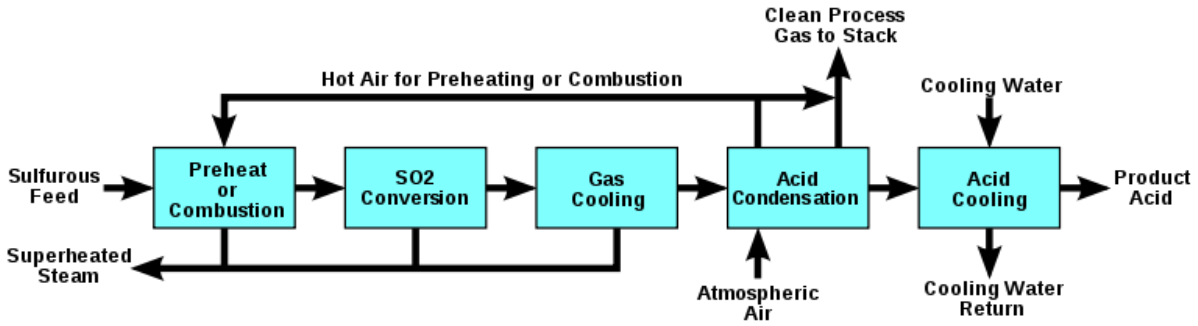

Figure 3-3-9 WSA Acid Process

4. Definition of QA and QC

4.1 QA/QC as applicable to natural gas processing

Quality assurance and quality control are often classified as similar activities in gas processing. The majority of the time, they are discussed together, however; they are two distinct types of activities. Quality assurance is a planned system of review procedures that can be conducted by a dedicated processing division or as a part of daily operations. Quality control is a system of routine technical activities implemented by a gas company to optimize processing and ensure compliance with all safety procedures. Simply stated, QA is the audit process. QC, on the other hand, is the generic set of processes that define and guide all activities.

4.2 Why do QA/QC?

The majority of gas companies operating in developed countries have integrated QA/QC into their daily processes such that quality becomes a critical component of operations. The ability to integrate QA/QC seamlessly into daily operations is actually a fairly advanced concept. It is generally achievable in companies that have a clearly defined corporate culture dedicated to being incident free.

In the case of a company that is conducting gas processing that might still be working to develop this corporate culture, such as AGE, QA/QC must be more overt and the subject of discrete actions by dedicated personnel. The corporate culture defined by safety does not just happen overnight. Founded in best practices and then monitored/administered by a robust QA/QC program, this culture can be developed. That said, it is very easy to circumvent processes and procedures in order to ensure that gas production is maximized, but the experienced operator understands the difference between maximization and optimization. The latter implies the greatest production of quality natural gas under the safest and most controlled conditions. QA/QC is the driver of optimization and more specifically gas processing optimization. The absence of QA/QC not only results in suboptimal production, but guarantees that a tragic incident will happen in time.

Fundamentals of QA/QC

A gas processing QA/QC plan is the nucleus of the QA/QC system. The plan informs the company (AGE) as to specific personnel requirements, activities and relevant scheduling. Typical personnel in a QA/QC department include the following:

- Coordinator

- Inventory Lead
- Category Leads
- Outside experts (when required)

The coordinator is directly accountable to the highest levels of the company for implementing all aspects of the QA/QC plan. The inventory lead reports to the coordinator for specific QA roles and is responsible for ensuring that audits occur correctly along with proper deficiency tracking and corrective actions. The category leads are responsible for the individual components of processing QA/QC. For example, there may be separate leads for each processing function (such as safety, separation, purification, dehydration, compression, environmental, etc.) that oversee the QA/QC process in each of their respective areas. Typically, the category leads are experienced and experts in their field who are entrusted by the QA/QC coordinator to ensure complete compliance with the QA/QC plan. The category leads make recommendations when standards are not met or there are deficiencies noted on audits. In order to be effective, the QA/QC must be divorced from the profit arm of the company so that their analysis can be independent.

Benefits of QA/QC

As discussed earlier in the processing section, natural gas is typically classified by its chemical composition and in a broader basis by the liquid and sulfur content. Specifically, natural gas that provides for a large amount of natural gas HC liquid recovery (measured in gallons/Mscf) can be classified as rich or wet. Lower production of HCs results in a classification as lean or dry. In terms of sulfur content (typically H_2S), gas is classified as either sweet or sour dependent upon the molar volume of H_2S. Gas containing high volumes of H_2S is classified as sour and in the presence of water is extremely corrosive to carbon steel. Gas with lower volumes of H_2S is classified as sweet. While the amount of acceptable H_sS varies, the typical value to meet the sweet gas criteria is less than 4 ppm. Pipeline-quality is measured in grains/scf with values around 0.25 (equates to 4 ppm).

When evaluating the classification of natural gas, the term quality can be applied to the control, measurement and optimization of the processing as well as the final output. A solid QA/QC program applied to the processing element will guarantee a finished product that meets all quality standards. While it is true that there is some level of QA/QC that occurs downstream of the processing plant, QA/QC should be inherent in all processes to ensure that operations occur safely and the greatest amount of revenue to AGE can be realized.

Immediate, Mid-term and Long-term Requirements

The QA/QC system, as adopted by modern gas companies, is not currently practiced by AGE. Outside expertise will most likely be required in order to fully meet this requirement, but the adaptation of a functioning QA/QC system can be conducted in an iterative manner. Ideally, a robust QA/QC department would be established prior to executing the first commercial offtake agreement that had the requisite amount of autonomy and capacity to provide quality input to the whole value chain, however; should this be proven not possible, AGE would benefit by focusing on the subset of quality that addresses safety and standards compliance as an immediate solution. Mid-term emphasis on QA/QC to ensure process optimization for maximum production/profit and continuous process improvement in the long-term is the typical order of QA/QC adaptation.

5. International Codes and Standards

Throughout the world, there are many different sets of design standards that are utilized in the design and construction of natural gas pipelines and processing facilities. All of the various standards have the same purpose, which is to design and construct pipelines and facilities in such a manner so they can be safely operated regardless of location and operating conditions. Further, they must remain economical to operate. Thus, a balance must be met between a reasonable capital investment and a robust design that will provide for safe operating conditions for the operating personnel and for the general public.

While most countries utilize standards which are based on fairly well-defined design or safety factors, there are countries that base designs on a Quantified Risk Analysis which matches the application design with the location, risk of failure and the likely damaged caused by failure versus the cost of additional safety factors or redundancies. This approach is normally used to justify smaller safety factors.

5.1 Recognized International Standards

Some of the most utilized pipeline safety and design codes include the following:

- United States – U.S. Department of Transportation – "Title 49 CFR Part 192 Transportation of Natural and other Gas by Pipeline – Minimum Federal Safety Standards"
- Canada – "CSAZ 662 – Oil and Gas Pipeline System Code"
- Australia – "AS2885 Australian Standard: Pipeline – Gas and Liquid, Part 1 Design and Construction"
- British Standard and European Standard – "BS EN 14161 Petroleum and Natural Gas Industries-Pipeline Transportation Systems"
- International Standards Organization (ISO) "ISO 13623 Petroleum and Natural Gas Industries – Pipeline Transportation Systems"

5.2 ISO Harmonization Process

ISO TC67 is a technical committee devoted to the harmonization of international standards in the natural gas and petroleum industries. The standards under review by this committee include line pipe, coatings, valves, actuators cathodic protection, and mechanical fittings.

Countries participating in the development of this process include the following:

- Participating Countries per the ISO Website:
    - Argentina
    - Australia
    - Austria
    - Belgium
    - Brazil
    - Canada
    - China
    - France
    - Germany
    - India
    - Indonesia
    - Iran, Islamic Republic of

- Ireland
- Italy
- Japan
- Kazakhstan
- Korea, Republic of
- Malaysia
- Mexico
- Myanmar - Correspondent Member
- Netherlands
- Norway
- Qatar
- Romania
- Russian Federation
- Ukraine
- United Kingdom
- United States

- Observing Countries –
  - Denmark
  - Finland
  - Poland
  - Saudi Arabia
  - Serbia
  - Slovakia
  - South Africa
  - Spain
  - Sweden
  - Switzerland

Example: Design Factors for Natural Gas Pipeline Population Density

The principal difference between any of the major design codes are how they treat design factors (or safety factors) related to population density.

Pursuant to Part 192 (US Code), –the Class Location Unit is an area that extends 220 yards (200 meters) on either side of the centerline of any continuous 1-mile (1.6km) length of pipe. Class location is based on the number of dwelling units intended for human occupancy within a Class Location Unit. Each separate dwelling unit in a multiple dwelling unit is counted as a separate building intended for human occupancy. The breakdown under the U.S. code of the class locations is as follows:

Table 5-1 Class Location Designations U.S. Code Part 192

CLASS LOCATION	NUMBER OF DWELLINGS
1	10 or less

2	11 – 45
3	46 or more
4	Buildings four or more stories high are prevalent

In an attempt to normalize the design factors of major codes to the U.S. Part 192 definitions, the following table summarizes the allowable design factors and is useful to show the variability:

Table 5-2 Design Factor Comparison for Major Codes

COUNTRY	CLASS 1	CLASS 2	CLASS 3	CLASS 4	COMMENTS
USA PART 192	.72	.6	.5	.4	
CANADA CSAZ 662	.8	.72	.56	.44	
AUSTRALIA AS2885	.72	.72	.72	.72	
BRITISH & EUROPEAN BS EN 14161	.72	.3	.3	.3	Class 2 can be raised to .72 with risk analysis
ISO 13623	.83	.77	.67	.55	Class 1 is remote such as a desert. Also Class 5 @ .45

6. Best Practices

6.1 Design

Best Practices for design always should be based on the safe operation of the natural gas pipeline, compressor station, dehydration, treating or other facility for both the operators the general public and the environment

Due to the wide variety of locations where natural gas is produced and transported, best practices will vary somewhat between locations and must take into account the population density, safe operation, security, environment, availability of replacement parts, availability of personnel, emergency reaction time and the availability of alternate fuel sources in the event of system down time.

Design Standards

While design standards that are custom designed for the location along with that location's known risk factors should offer the best outcome, custom design standards can be difficult and expensive to prepare. Therefore, in most cases, design standards that are in effect at other locations may be the better solution. There are many sets of these standards and construction specifications that exist within the natural gas pipeline industry. Some of the suggested construction specifications are as follows:

- General Station Work
- Meter and Regulator Stations
- General Pipeline Work

- Right of Way
- Demolition
- Unloading, Hauling, Stringing and Storage of Pipe and Equipment
- Pipeline Survey
- Archaeological Survey
- Environmental Survey
- Grading Drainage, Clearing and Landscaping
- Clearing and Grading of Right of Way
- Station Excavation and Backfill
- Pipeline Ditching
- Directional Drilling and Trenchless Installation
- Road and Railroad Crossings
- Rock Excavation
- Pipe Bending
- Welding
- Automatic Welding
- Weld repair
- Welder Qualification
- Cathodic Protection
- Joint Coating
- Concrete Weights and Weight Coating
- Laying and Lowering In
- Backfilling
- Rock Shield and Padding
- Ditch Breakers
- Small Stream Crossings
- Major Water Crossings
- Block Valves
- Pig Launchers and Receivers
- Nondestructive Testing
- Hydrostatic Testing
- Tie Ins
- Blowdowns
- Lock Out Tag Out Procedures
- Purging and Pipeline Filling
- Carpentry
- Concrete
- Station Piping
- Stress Relieving
- Hot Tapping
- Station Valves, Fittings and Appurtenances
- Buildings

- Instrumentation
- Electrical Work
- Painting
- Start up
- Final Cleanup

Design Safety

As part of the design process, the safety of the facility and all workers need to be at the forefront of all design efforts. All design should have appropriate safety factors. Safety during construction should also be a prime consideration in the design of the facility. Some of the key safety issues are as follows:

- Personal protection for workers such as:
    - Safety glasses
    - Hard hats
    - Safety shoes
    - Long Sleeve and fire resistant clothing
    - H_2S and other gas monitors (personal)
- Design of automatic shutdown/blowdown systems
- Fire monitors
- Gas monitors
- Electrical grounding
- Proper electrical design
- Emergency evacuation routes
- Sizing of all materials with appropriate design or safety factors

Calculations and Design Drawings

Calculations for all major components should be documented in writing noting who made the calculations and when. All calculations should be checked by a second party to reduce chances of calculation error.

Drawings for construction should clearly define the work to be done with sufficient details so that there is no doubt as to the intent of the drawing. Where possible, English and metric dimensions should be included. Drawings should reference materials and include a separate material list with sufficient detail to specify and order each piece of material or equipment and the quantities required.

Material Specifications

In addition to the material lists included with the drawings, a master material list must be made with which to order materials. Standard materials such as pipe and fittings may be identified by description and the specification. Other materials or systems will require detailed specifications. Some of the specific details to be included in material specifications follow:

- Operating pressure range
- Volumes of gas flow range
- Maximum allowable operating pressure
- Operating temperature range
- Ambient temperature range

- Composition of gas-Gas analysis
- Condition of gas (water content)
- Electrical power availability and voltage/Hz
- Site conditions
- Location of installation within facility- Hazardous vs nonhazardous area
- Compatibility design requirements with other materials or systems
- Spare part requirements

6.2 Gas Plant Process Design

Process Design/Process Engineering

Treatment of natural gas often involves linking multiple treatment processes into a defined order which results in achieving product quality specifications required to optimize utilization and maximize value for the natural gas and related HCs. This process design results in the desired physical or chemical transformation of the natural gas and related products. Process design can be the design of new facilities or it can be the modification or expansion of existing facilities. The design starts at a conceptual level and ultimately ends in the form of fabrication and construction plans. Process engineering focuses on the design, operation, control and optimization of chemical, physical and biological processes. Process engineering encompasses a vast range of industries, such as oil and gas, chemical, petrochemical, mineral processing, advanced material, food, pharmaceutical, software development and biotechnological industries.

The application of systematic computer-based methods to process engineering is process systems engineering. Process design is distinct from equipment design, which is closer in spirit to the design of unit operations. Processes often include many unit operations. Process design documents serve to define the design and they ensure that the design components fit together. They are useful in communicating ideas and plans to other engineers involved with the design, to external regulatory agencies, to equipment vendors and to construction contractors. In order of increasing detail, process design documents include:

- Block flow diagrams: Very simple diagrams composed of rectangles and lines indicating major material or energy flows.
- PFD: Typically more complex diagrams of major unit operations as well as flow lines. They usually include a material balance, and sometimes an energy balance, showing typical or design flowrates, stream compositions, and stream and equipment pressures and temperatures.
- Piping and instrumentation diagrams (P&ID): Diagrams showing all piping, fittings, valves and instrumentation including sizes and design pressures. The P&ID details how the entire process works.
- Specifications: Written design requirements of all major equipment items.
- Operating Manuals: Process designers also typically write operating manuals on how to start-up, operate and shut-down the process.
- All these created documents are maintained after construction of the process facility for the operating personnel to refer to. The documents also are useful when modifications to the facility are planned.

In process design of a facility, the process design engineer considers given objectives and constraints even a simple process requires trade-offs, such as equipment cost versus operating cost. The following list defines some of the factors that must be considered in design:

- Objectives that a design may strive to include are: Throughput rate or capacity, pressure ranges, temperature ranges, process yield of HC products, and product purity.
- Constraints include: Capital cost, available space, safety concerns, availability of electric power, water, site access, or other process requirements environmental impact, projected effluents and emissions, waste production, operating and maintenance costs
- Other factors that designers may include are: Reliability, redundancy, flexibility, anticipated variability in feedstock and allowable variability in product.

This report, considers the process design of a Natural Gas Processing Plant (NGPP). The diagram below shows the location of the gas processing plant/component of the midstream as compared to the total natural gas value chain.

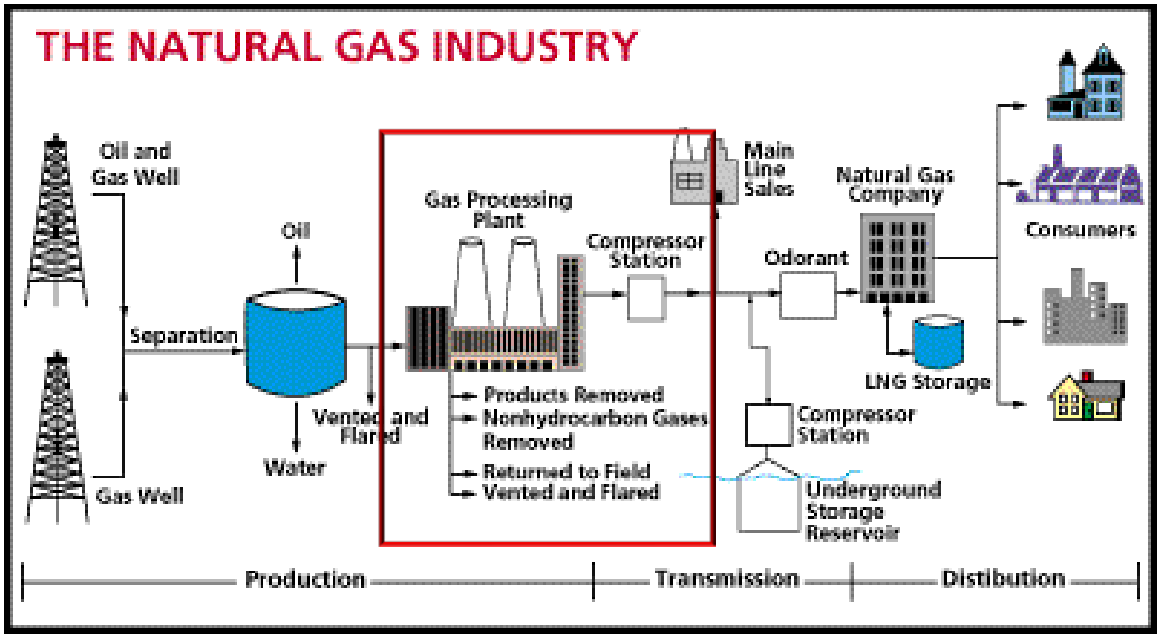

Figure 6-6-1 Natural Gas Industry Value Chain

Process design in the oil and gas industry is most applicable to gas plants, fractionators, storage facilities and transportation. The following list is useful to demonstrate the complexity and range of design elements that must be considered by process design engineers:

- Basic economic considerations for modern gas processing facilities, processing economics, process gas treating types such lean oil absorption and cryogenic, considerations upstream of the process facility, design and review of cryogenic and lean oil absorption processes, basic considerations for offshore installations, distillation units, fractionator basics, product separation, gas sweetening, gas dehydration, and sulfur recovery
- Storage - salt dome storage facilities, pressurized storage, cryogenic storage

- Transportation systems - pump stations, compressor stations, metering and regulating stations, truck loading terminals, transports, ships, barges, railcars
- Heat Exchangers - process heat exchanger types (Shell and Tube, Plate Fin, etc.), heat exchanger design basics, offshore considerations, cooling towers, basic design terminology, heat transfer coefficient basics, printed circuit heat exchangers, air-cooled exchangers
- HC and Water Dew points - water dew point basics, HC dew point basics, HC phase diagrams, controlling water and HC dew points, operational vs theoretical HC dew points
- Turbo expanders, J-T Valves, Refrigeration Systems- Turbo expander components, Operating principles of turbo expanders, Joule-Thomson Effect , J-T Valve basics, Refrigeration system basics
- Cryogenic natural gas liquids extraction processes- liquefied natural gas (LNG) and compressed natural gas (CNG) Basics, Typical LNG specifications, Typical interstate pipeline natural gas specifications, LNG transportation and storage basics, CNG transportation and storage basics, Wobble Index, Natural gas distribution systems
- Gas Processing Specifications and Test Methods - Common specifications for LPG products (Color, Corrosivity, RVP, etc.), Common specifications for crude oil and condensate products (Gravity, S&W, etc.), ASTM test methods for liquid products, Sediment and water determination, Liquid analyses using gas chromatographs

Block Flow Diagrams

Process design engineers start with block flow diagrams to initiate process design concepts This block flow, as an example, shows crude oil processing upstream of the NGPP:

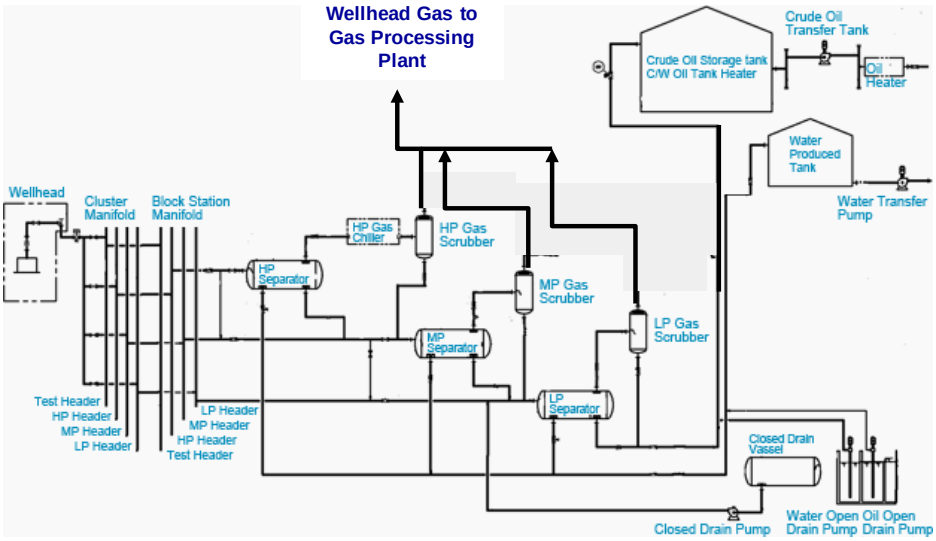

Figure 6-6-2 Typical Block Diagram For Conceptual Process Design

As another example, this block flow diagram shows processing of the gas stream from the field:

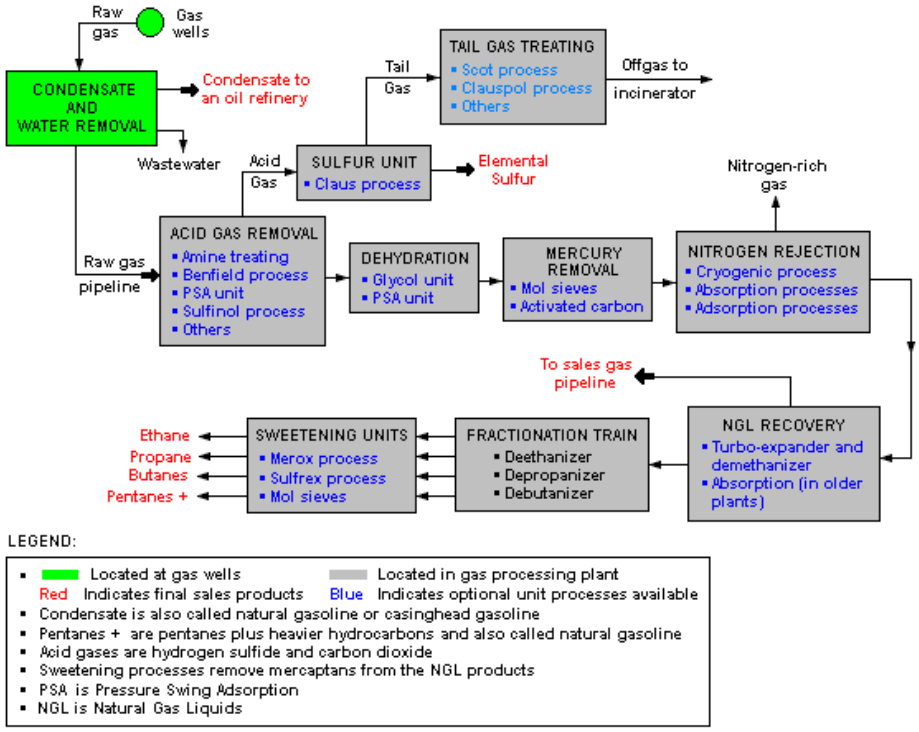

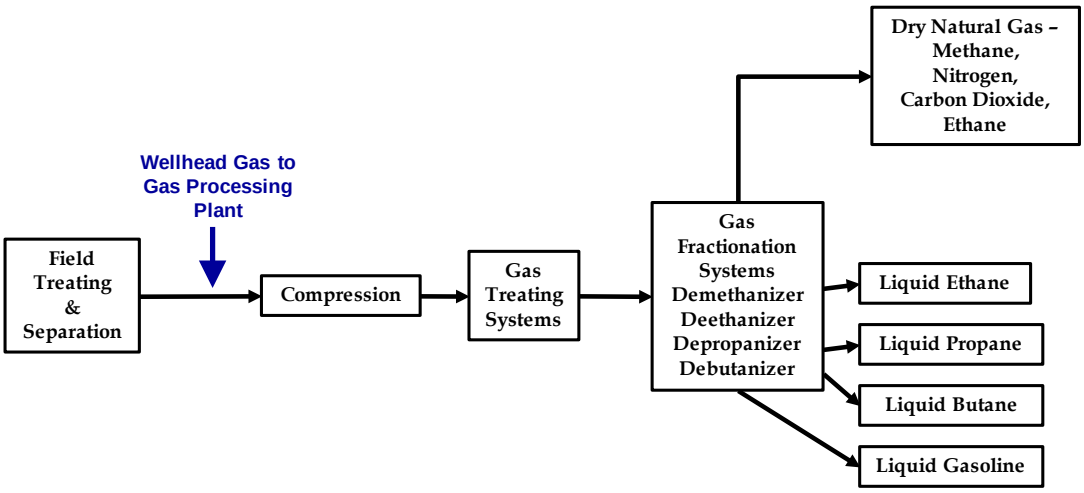

Figure 6-6-3 Typical Block Diagrams

Process Flow Diagrams (PFDs)

PFDs show the relationships between the major components in the system. PFDs also tabulate process design values for the components in different operating modes; typical minimum, normal and maximum. A PFD does not show minor components, piping systems, piping ratings and designations. A PFD should include: Process Piping, major equipment symbols, names and identification numbers, Control, valves and valves that affect operation of the system, interconnection with other systems, major bypass and recirculation lines, system ratings and operational values as minimum, normal and maximum flow, composition of fluids, major equipment symbols, names and identification (either by name, number or both), flow directions (indicated by arrows on the process streams),

pressures and temperatures, as well as other control valves and systems that monitor and control the operation of the process (shown schematically, rather than in complete detail) pressures, temperatures, flow rates and other pertinent operational values for each of the equipment items such as pumps, gas compressors, distillation columns and other vessels

In some cases, the PFD includes a material balance that lists the normal temperature, pressure, amount and composition of all the major process streams. Also included, in some cases, are the amount of heat provided by any process furnaces and the amount of heat exchanged by any process heat exchangers.

This figure below depicts a small and simplified PFD:

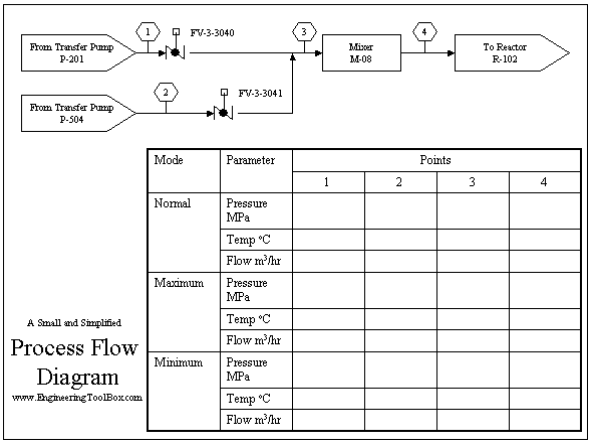

Figure 6-6-4 Simplified PFD

PFDs should not include:

- Pipe classes or piping line numbers
- Pipe sizes
- Process control instrumentation (sensors and final elements) in detail
- Minor bypass lines
- Isolation and shutoff valves
- Maintenance vents and drains
- Relief and safety valves
- Flanges (if any)
- Code class information
- Seismic class information

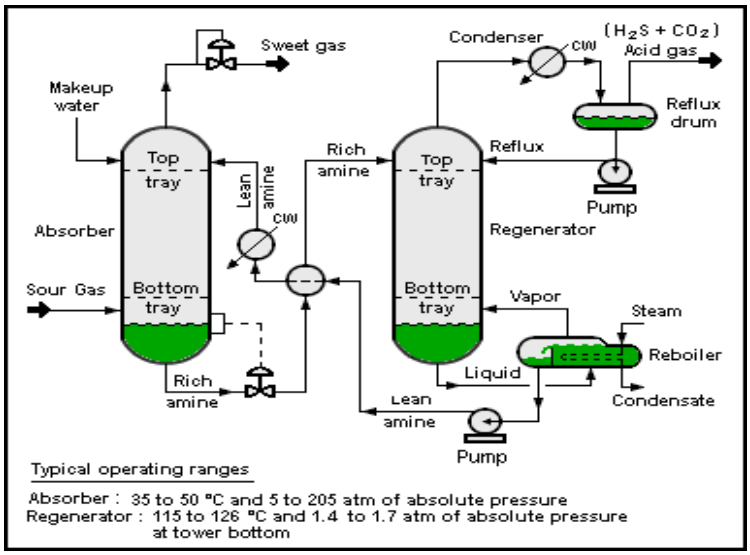

Figure 6-6-5 Typical PFD

The process design engineer uses Gas Plant Process Simulation programs to determine heat and material balances and that information is placed on the PFDs. The process simulations also provide preliminary sizing of process vessels, scrubbers, compressors, heat exchangers, pumps, and distillation or fractionation columns. Process simulation programs include Aspen HYSYS, ProMax with TSweet & ProSim by Bryan Research& Engineering, PetroSim5, CHEMCAD, Pro/II, Simsci and JPro. Commercial process simulation software, process simulators can be licensed long-term or short-term:

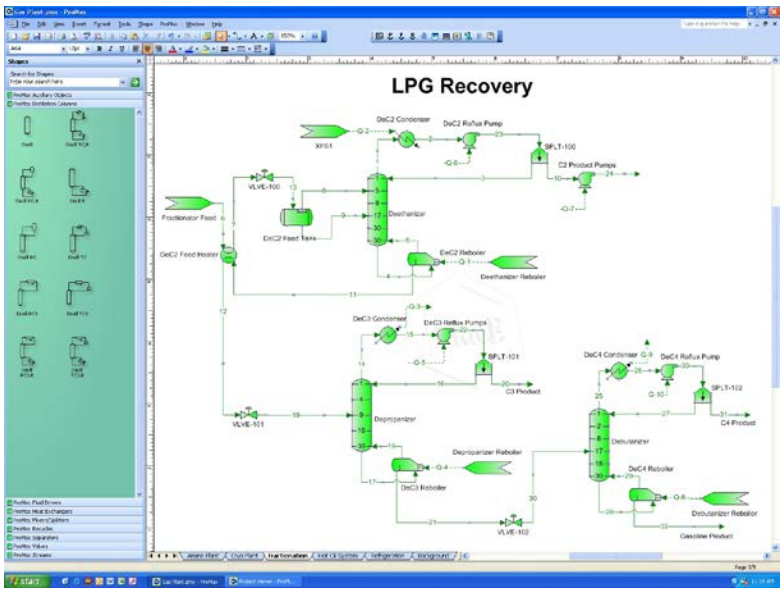

Figure 6-6-6 Typical Process Simulation Diagram

After the PFD and process simulation are complete the entire NGPP can be designed and eventually constructed.

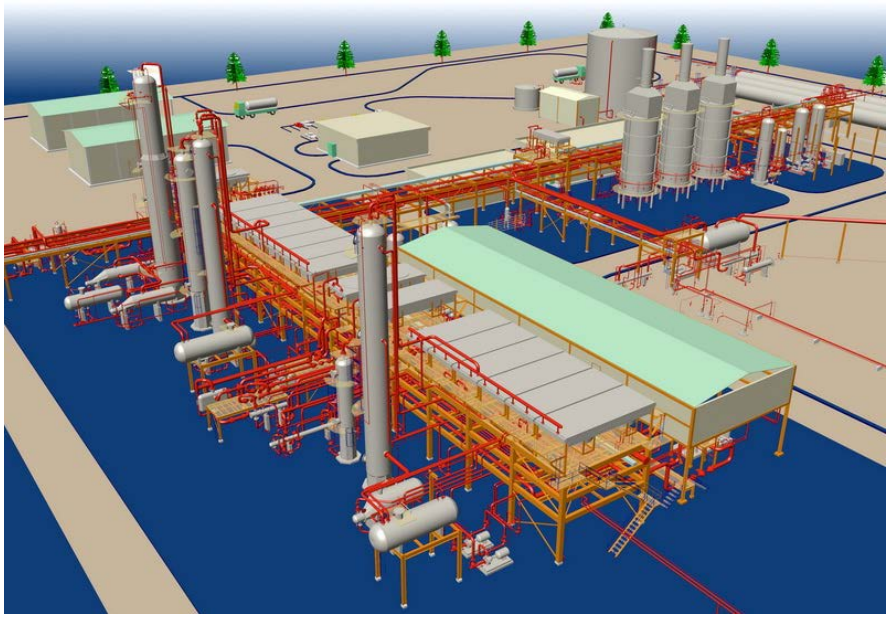

Figure 6-6-7 Typical Plant Layout

Piping & Instrument Diagrams (P&IDs)

A P&ID is a schematic illustration of functional relationship of piping, instrumentation and system equipment components. P&IDs show all of the piping including the physical sequence of branches, reducers, valves, equipment, instrumentation and control interlocks.

A P&ID should include:

- Instrumentation and designations
- Mechanical equipment with names and numbers
- All valves and their identifications
- Process piping, sizes and identification
- Miscellaneous - vents, drains, special fittings, sampling lines and reducers,
- Permanent start-up and flush lines
- Flow directions
- Interconnections references
- Control inputs and outputs, interlocks
- Interfaces for class changes
- Seismic category
- Quality level
- Annunciation inputs
- Computer control system input
- Vendor and contractor interfaces
- Identification of components and subsystems delivered by others
- Intended physical sequence of the equipment

A P&ID should not include:

- Equipment rating or capacity
- Instrument root valves
- Control relays
- Manual switches and indicating lights
- Primary instrument tubing and valves
- Pressure temperature and flow data
- Elbow, tees and similar standard fittings
- Extensive explanatory notes

The figure below depicts a very small and simplified P&ID:

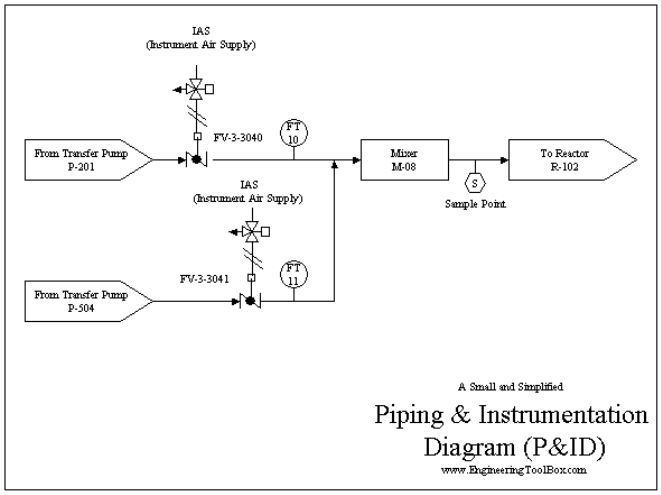

Figure 6-6-8 Typical Simplified P&Id

Process Design Through Front End Engineering Design

6.2.1.1 Conceptual and Preliminary Process Designs

Feasibility Studies and Conceptual/Preliminary Process Design (FEL-0 / FEL-1 / pre-FEED) -

When clients are contemplating a new pilot facility, new plant, or major process expansion, they typically have more questions than answers. Is it technically feasible? What is the best process configuration? Should it be batch or continuous? How much would it cost? Process Design is able to assist by providing experienced and knowledgeable engineers that can identify, and systematically narrow down, the possible technical options for a given process goal. Once the viable technical options are identified, an economic evaluation is performed. Based on technical merits, system reliability, economics (capital and operating), and other factors, it usually becomes clear as to how the future process design should progress. At this point, a conceptual design can be developed that includes preliminary PFDs, mass & energy balances, a list of major equipment and a rough order of magnitude cost estimate. Process design can also assist at this point in identifying potential risks associated with the design (weak areas in the design basis, insufficient lab data, etc.) so that a plan can be developed to address these issues prior to or during the next phase of the project. *It is widely recognized that this key front end work will have a major impact on the overall project and ultimate operation of the process. If this work is not done properly then the project is in trouble no matter how good the subsequent detail engineering, construction, and project management work are executed.*

FEL 0 - Identification Phase (Conceptual Process Design or Screening Study)

Industrial project opportunities can target revenue growth; expense reductions; strategic growth; or improved reliability and/or efficiency. Companies typically identify opportunities by evaluating the value and identifying key risks and uncertainties. It is important to evaluate opportunities on a consistent basis for comparison purposes. The basis for the first decision gate is a high level screening study or conceptual process design study. This level of work involves identifying promising chemical conversion pathways or major licensed technologies, narrowing the project down to one or more options, identifying major equipment, developing block flow diagrams, and generating an order of magnitude capital cost estimate range ($1MM, $10MM, $100MM, etc.).

FEL 1 - Appraisal & Selection Phases (Alternatives Evaluation and Preliminary Process Design)

During the appraisal phase of the project, a series of process alternatives is developed and further assessment of the process value, risk, and uncertainty is conducted. Some examples may include alternatives such as batch versus continuous processing, use of different types of separation techniques (extraction versus distillation, pressure filtration versus a centrifuge), etc. The most promising development concepts progress forward to the selection phase.

Selection (Preliminary Process Design) - The objective of the selection phase of the project is to identify a single process concept for progression to the detailed process design phase of the project. Preparation of work deliverables requires that a single process concept be selected and further developed during this phase. Once a concept has been selected, the team will complete the level of detail necessary to develop a cost estimate and preliminary project schedule with a typical accuracy of –30% to +50%. Deliverables at this stage often include the following:

- Preliminary Process Design Basis
- Process Alternatives Evaluations Summary
- Preliminary Process Simulation and Heat and Material Balance Data
- Preliminary PFDs
- Preliminary Equipment List
- Preliminary Major Equipment Conditions of Service List
- Preliminary Capital and Operating Cost Estimate (+50% /-30%)
- Preliminary Summary of Raw Materials and Utility Requirements
- Process Risk Summary.

6.2.1.2 Detailed Process Design - (Schedule A, FEL-2 / FEL-3 / FEED, or Basic Engineering Packages)

Once the process configuration has been clearly defined, a detailed process design package can be prepared. This is very critical to the long-term success of the project.

FEL-2 Process Design Package- the Process Design Package or Front End Engineering Design Study (FEED) will establish the specific set of process operating conditions and equipment necessary to achieve the level of reliability, efficiency and safety required. This design phase sets the direction for the rest of the project. At the completion of this phase, a cost estimate of +40%/-20% can typically be developed for the project. Process design puts great emphasis on the development of the design basis at the initiation of FEL-2. When the design basis is complete, the following information is defined:

- Raw material specifications
- Plant capacity requirements
- Product specifications
- Critical plant operating parameters
- Available utilities specifications
- Individual unit operations performance requirements
- Process regulatory requirements
- All other operating goals and constraints desired by the plant owners/operators/engineers.

Once the design basis is in place, and agreed upon with the company, process design engineers go to work to create, analyze, and optimize the many aspects of the plant design. The end result is process documentation that clearly defines the process.

Typical Process Engineering Deliverables for an FEL-2 package can include the following or a smaller subset of these items:

- Process design basis
- Material & Energy Balance (M&EB)
- PFDs
- Process descriptions
- Utility balances and Utility Flow Diagrams (UFDs)
- Preliminary P&IDs
- Process control description
- Preliminary line/pipe list
- Preliminary instrument list
- Process equipment list
- Preliminary Tie-in list
- Equipment process datasheets
- Instrument process datasheets
- Hydraulic design reports.

FEL-3 Detailed Process Design Package- The detailed process design package (PDP), which is sometimes referred to as a Schedule A or Basic Engineering Design (BED) package, refers to a completed process design package that includes all the necessary information required by an Engineering/Construction firm or Detail Engineering firm to perform the final engineering of the plant (details such a structural steel supports, buildings, wiring, piping details, insulation, equipment vendor/model selection, etc.). Process design provides this package and helps to answer any questions the company or engineering firm might have to ensure a smooth transition into the detail engineering phase. In addition to updating the items mentioned above in FEL-2, the following items are typically added during the FEL-3 phase.

- Preliminary general arrangement drawings
- Preliminary building requirements
- General description of the project site
- Budget pricing from vendors on major pieces of equipment

- Process design philosophies
- Relief system design basis
- Relief scenario datasheets and relief valve process datasheets
- Material Selection Diagrams (MSDs) and piping specifications
- Tie-in list
- Identification of power source and location
- Preliminary single line diagrams
- Process specialty items list
- Raw material and product storage and handling requirements
- Process effluent and emissions summary
- Process risk analysis (process hazard analysis, hazard and operability study)
- Preliminary operating procedures
- Preliminary product and in-process QC sampling/testing plan
- Preliminary project schedule.

At the completion of this phase of the project, a cost estimate of +25%/-15% can typically be generated for the project.

6.2.1.3 Process Integrity Oversight During Detail Engineering & Construction Phase Support

More and more, process design engineers are requested to remain on during the detail engineering and construction phases of projects for which they have performed the process design. In this oversight role, any process change requests are reviewed by process engineers for approval or comment. This helps ensure that the company understands what the impact may be on the process as changes and alternatives are suggested. Many times there is great pressure to hold down costs as the civil, mechanical, electrical, and instrumentation details of the plant are developed. The temptation to remove seemingly inconsequential process components can lead to off-spec product, inadequate throughput, high operating costs, etc. Process design is able to help prevent such problems simply by serving as the process integrity watchdog. In addition, many times process design engineers are asked to provide vendor technical and cost proposal evaluations to assist the client in making the best technology selection possible. Since process design engineers are not aligned with any equipment companies, these services can be evaluated in a completely objective manner to find the best recommendation based solely upon the technical and economic aspects of the options.

Process Technical and Economic Evaluations -

Process design engineers are often called upon by companies to evaluate process options aimed at achieving one or more specific goals. These goals run the gamut from improved throughput, quality, or consistency, to emissions reduction, energy recovery, or waste minimization. Analysis is initially accomplished through a series of interviews and discussions with the company's technical, engineering, and plant operating personnel. Additionally plant process data is collected in various forms, some of which include P&IDs, batch sheets, data logs, heat and material balance information (if it exists), operation logs, etc. Process design engineers then begin to analyze the situation via experience, calculations, simulation techniques, and in consultation with other process design engineers, as needed. The outcome is a technical engineering critique of the current process with a focus on the areas which need the most improvement. The economic cost implications of the current process are modeled to establish the baseline from which all potential improvements will be evaluated. Many times the engineering critique is used to identify viable technical options and provide an economic comparison between them. Based on technical process option merits,

economic cost implications (capital/operating, fixed/variable), and process design engineers experienced-based evaluation of the relative suitability of each process option, a final solution is recommended. Although more detailed engineering effort is required to make the best option a tangible operational solution, companies can do so with confidence knowing they have made an intelligent, thorough, systematic, and informed decision.

Process Design Components

Any of the design services listed above may include some or all of the following components. The items included and level of detail will vary depending on clients' desires or on which phase the project is in. The more mature the process design, the more of these components will be included.

- Process design basis development
- Regulatory basis development
- Conceptual process design
- Process computer simulation
- Mass and energy balances
- Technical and economic process alternatives evaluation
- Advanced spreadsheet-simulation-spreadsheet user interfacing
- Process control system design
- Detail process design

Complete process design packages normally include:

- Design basis
- Mass and energy balance computer simulations
- Process simulation models for client use
- PFDs
- Process control logic and process control diagrams (PCDs)
- Capital cost estimate
- Operating cost estimate
- P&IDs
- Equipment plot plans
- Utility flow diagrams
- Equipment lists
- Equipment sizing and specifications datasheets
- Preliminary process hazards analysis documentation
- Plant layouts
- Preliminary process operating manuals

Operations Support - Project Examples

Listed below are the types of plant operations support that process design engineers typically provide to operating companies:

- Process evaluation, troubleshooting, optimization
- Debottlenecking
- Control system startup, tuning, optimization
- Commissioning and startup assistance
- Existing operations design basis development
- Operating procedures, process documentation
- Operator and technical staff training
- Statistical process control

6.2.1.4 Inherently Safer Design or Technology (ISD and IST)

Key components

The concept of ISD began with chemical safety expert, Trevor Kletz. After a chemical explosion killed 28 workers in 1974 in Flixborough, England, Kletz focused on proactive steps that could prevent subsequent disasters. Forty years later, Kletz's mission endures with four key principles of ISD, as outlined by the Center for Chemical Process Safety:

1. Substitute – If a less hazardous material is available, it should be considered.
2. Minimize – Reduce the amount of hazardous materials whenever possible.
3. Moderate – Cooler temperatures or lower pressures often can lead to less hazardous conditions.
4. Simplify – By removing unnecessary complexity, processes become more user-friendly and less prone to failure.

The concept of Inherently Safer Design is similar to Prevention through Design. Both concepts have the same goal in mind, but ISD has been applied specifically to chemical plants and processes towards a goal of reducing fires, explosions and toxic leaks.

6.3 Gas Plant Operations and Maintenance

Organization of Operations Department

The organization of a typical operations department is depicted by the following chart:

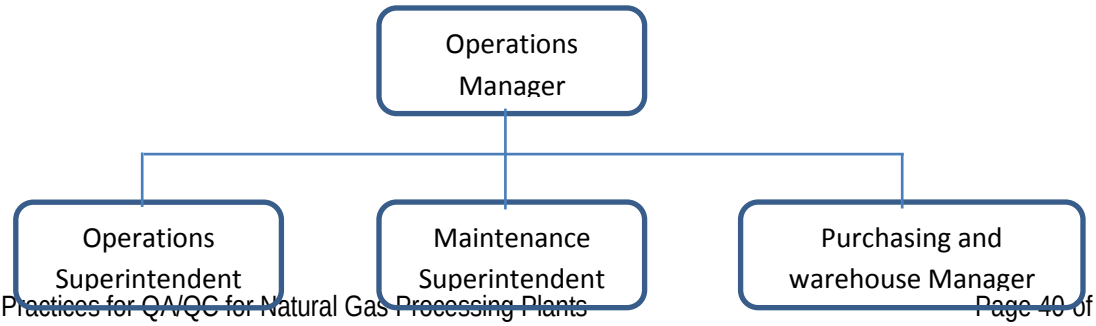

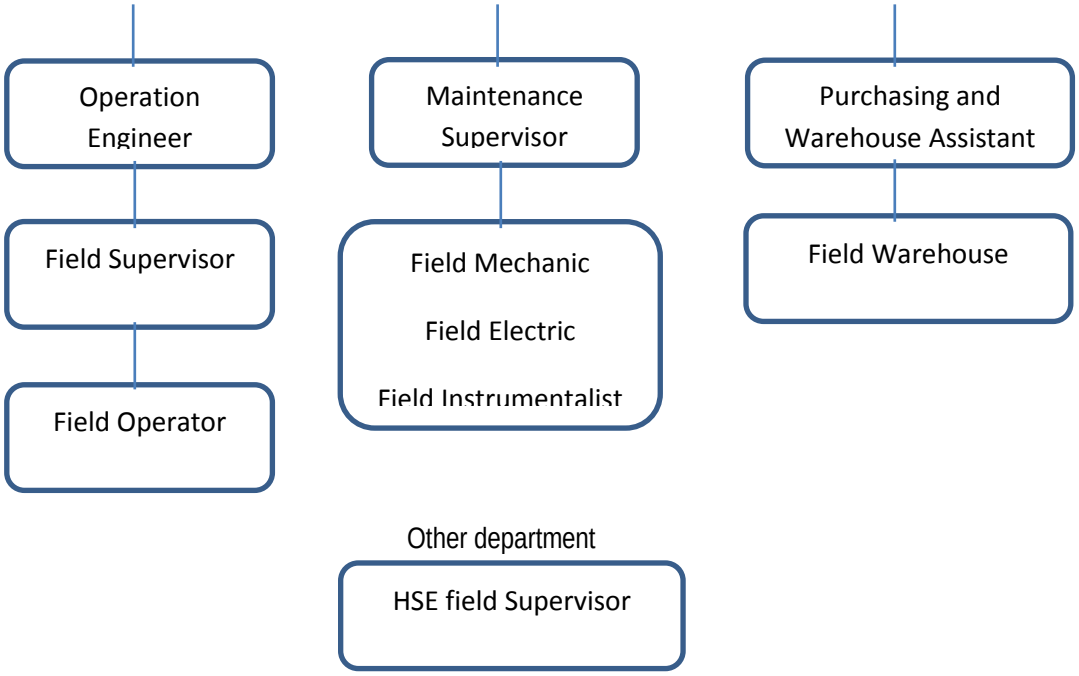

Figure 6-6-9 Typical Operating Department Structure

Staff

Basic descriptions for each of the staff positions follow:

Operations Manager

Monitors compliance of business programs, implement preventive and corrective actions to improve operational efficiency , assess operational performance, propose and implement strategies to reduce time and cost of operations, setting standards, guidelines, procedures and information systems for development, integration and monitoring of operational programs of the company, coordinate the identification and analysis of critical factors for the implementation of programs and to establish mechanisms and information systems for tracking investment projects, coordination and direct supervision of operating personnel, logistics and maintenance.

Operations Superintendent

1. Ensures continuous improvement of the organization by promoting :
   a. The development of people through the implementation of screening programs and established training according to the specific needs demonstrating the benefit that is generated.
   b. The search for opportunities to reduce and optimize costs for the benefit of the organization; "do more with less."
   c. The maintenance of an adequate organizational structure designed to achieve the objectives.
   d. The improvement of processes and procedures.
   e. The maintenance of a good organizational climate and compliance with best practices in the workplace.
   f. Compliance with both local and corporate policies.
2. Ensures timeliness and quality in the execution of department processes in ways that contribute to meeting production targets.

3. Coordinates with the health, environmental, safety program assigned to the area.
   a. Complies with corporate and local guidelines for social responsibility to avoid or minimize risks and negative impacts on human rights issues, community relations, environment and responsible practices in the workplace.
   b. Identifies potential risks and prevents accidents in the operations department

Operations Engineer

1) Ensures continuous improvement of the organization through a responsible attitude based on:
   a. The adequacy, implementation, monitoring, documentation and compliance of administrative policies and procedures.
   b. The identification of risks and accident prevention.
   c. Compliance with the best practices in the workplace.
   d. The reduction of risks and negative impacts on related issues: human rights, community relations, environment and responsible practices..
   e. The preservation and promotion of a good organizational climate.
   f. Enabling active support operations to ensure compliance with established programs
   g. Assess alternative systems that enable improved production in low pressure wells
   h. Reports to the Production Activities Superintendent of Operations for the control and implementation of corrective and preventive measures.
   i. Improving operating processes in plants to meet quality control parameters delivery and cost reduction.

Field Supervisor

1) Ensures continuous improvement of the organization promoting in the operations department:
   a. The development of people through the implementation of screening programs and established training according to the specific needs demonstrating the benefit that is generated.
   b. The search for opportunities to reduce and optimize costs for the benefit of the organization; do more with less.
   c. The maintenance of an adequate organizational structure designed to achieve the objectives.
   d. The improvement of processes and procedures.
   e. The maintenance of a good organizational climate and compliance with best practices in the workplace.
   f. Compliance with both local and corporate policies.
2) Ensures timeliness and quality in the execution of department processes in ways that contribute to meeting production targets.
3) Coordinates with the health, environmental and safety manager assigned to the area.
   a. Complies with corporate and local guidelines for Social Responsibility to avoid or minimize risks and negative impacts on human rights issues, community relations, environment and responsible practices in the workplace.
   b. Identifies potential risks and prevent accidents in the department
4) Conducts daily monitoring of production wells to meet production forecasts.
5) Coordinates the execution and receipt of work in the field and plant to ensure compliance with established standards.
6) Ensures the efficient and correct operation of the emergency systems.
7) Monitors the quality of HCs (gas - oil) for delivery considering sales specifications.

Field Operator

1) Ensures continuous improvement of the organization through a responsible attitude based on:
    a. The adequacy, implementation, monitoring, documentation and compliance with administrative policies and procedures.
    b. The identification of risks and accident prevention.
    c. Compliance with the best practices in the workplace.
    d. The reduction of risks and negative impacts on related issues: human rights, community relations, environment and responsible practices.
    e. The preservation and promotion of a good organizational climate.
2) Performs control of plant operations in gas separation processes and ensures that the required production for the day is achieved.
3) Reports faults of rotary and static equipment to the maintenance department so that necessary repairs can be accomplished in order to avoid loss of production equipment.
4) Drafts the daily report documenting production and sale of gas and condensate.
5) Coordinates with the Plant Supervisor in the execution of all planned activities to ensure the proper functioning of equipment and units.
6) Supports health, environmental and safety processes and ensures compliance with corporate regulations.

Maintenance Superintendent

1) Oversees protection of the environment and the health and safety of employees, customers, and the communities.
2) Prepares and administers programs, methods, systems, and practices for reducing costs and improving employee and plant efficiency, safety, productivity, and reliability.
3) Coordinates all maintenance (mechanical, electrical and instrumentation) activities for proper, safe execution of multi-million dollar plant turnarounds. Aggressively seeks to minimize cost and duration of shutdown activities.
4) Establishes and monitors key measures to ensure that a comprehensive and effective maintenance and reliability program is in place and that a Maintenance Excellence Process is practiced.
5) Assures plant compliance with industry standards such as American Society of Mechanical Engineers (ASME), API, National Association of Corrosion Engineers (NACE), and Professional Science Master's guidelines for preventive maintenance and inspection compliance for existing and new plant equipment and components.
6) Assures plant compliance with all applicable corporate maintenance guidelines.
7) Develop, implement and evaluate Preventive Maintenance Programs.
8) Manages the safety relief device integrity program and the emergency shutdown system and control system integrity program.
9) Directs and manages the site maintenance staff to implement best maintenance practices and provides technical expertise to reduce costs and improve process uptime and mechanical reliability.
10) Directs the planning and scheduling program, and its effectiveness, through the use of established benchmarks and parameters.
11) Controls maintenance expenditures within budget requirements by monitoring expenditures, adjusting priorities, and forecasting maintenance needs.

12) Coordinates and directs the use of outside resources assigned to the plant
13) Coordinates with engineering group(s) for capital project executions to ensure effective use of capital funds.
14) Manages and directs the plant stores system in a manner that complies with General Accepted Accounting Practices (GAAP) and corporate audit protocols.

Maintenance Supervisor

Responsible for coordinating and supervising the work of employees in the general maintenance and equipment.

1) Supervises and assigns the work of maintenance employees.
2) Inspects work for completeness.
3) Determines material, equipment, and supplies to be used.
4) Transfers equipment and personnel from one project to another as necessary.

Field Electric Specialist

1) Assembles, installs, tests, and maintains electrical or electronic wiring, equipment, appliances, apparatus, and fixtures, using hand tools and power tools.
2) Diagnoses malfunctioning systems, apparatus, and components, using test equipment and hand tools, to locate the cause of a breakdown and correct the problem.
3) Connects wires to circuit breakers, transformers, or other components.
4) Inspects electrical systems, equipment, and components to identify hazards, defects, and the need for adjustment or repair, and to ensure compliance with codes.
5) Advises management on whether continued operation of equipment could be hazardous.
6) Tests electrical systems and continuity of circuits in electrical wiring, equipment, and fixtures, using testing devices such as ohmmeters, voltmeters, and oscilloscopes, to ensure compatibility and safety of system.

Field Instrumentation Specialist

1) Coordinates preventive maintenance, troubleshooting, repairs, and calibration instruments and blending systems using internal and external resources.
2) Performs preventive maintenance, repairs, calibrations, and quality control measures.
3) Monitors, tracks, and evaluates scheduled instrument check data and performance charts.
4) Collaborates in training of field operations personnel on control systems.
5) Maintains instrument inventory, and generates monthly status report for all instruments.

Purchasing and Warehouse Manager

The Warehouse manager is responsible for overseeing the smooth running of the storage procedure, from the complicated storage logistics, to keeping an eye on the warehouse workers - scheduling shifts and ensuring staff are adequately trained. Daily tasks include:

1) Processing orders
2) Organizing the dispatch and delivery of goods
3) Ensuring goods are stored safely

4) Keeping staff fully trained
5) Maintaining health and safety standards
6) Keeping accurate records
7) Managing timesheets

Purchasing and Warehouse Assistant

The role of the Warehouse Assistant is to provide support to the vital mission of the Central Inventory Center and the management of inventory. The Warehouse Assistant works closely with the Purchasing Agent to insure that inventory is properly received, stored and distributed as need arises. The Warehouse Assistant is also responsible for, and involved in obtaining and recording proper documentation and maintaining records. This position also plays a key role in the distribution of stock, materials and equipment to sites, as well as handling obsolete items that must be disposed of properly.

Field Warehouse Personnel

Responsible for the organization and inventory of all materials, cleans warehouse for the purpose of maintaining an organized layout and safe work environment.

HSE Field Supervisor

1) Conducts pre-operational risk assessments on new sites and designs risk mitigation measures.
2) Develops all the required documentation, operational checks and reports for the HSE Management System to be compliant with safety standards such as OHSA 18001/2007 and ISO 14001/ 2004, including corrective and preventive measures.

Management

The management department coordinates the efforts of people to accomplish goals and objectives using available resources efficiently and effectively. Management comprises planning, organizing, staffing, leading or directing, and controlling an organization to accomplish the goal. Management differs from resourcing where resourcing encompasses the deployment and manipulation of human resources, financial resources, technological resources, and natural resources.

Engineering

The engineering department is responsible for planning, analyzing and implementing system extension projects; planning, design, and construction of major facility replacements; capital improvement projects.

Oversight, Inspection, Auditing, Monitoring, Witnessing

Evaluations, whether inspections or audits, are performed in order to verify the effectiveness of the HES system components management, or the degree of implementation, as appropriate, as applied to facilities and procedures. Audits and inspections are defined as follows:

- Audits: Generally refer to verification of management systems and may refer to internal company standards, best practice and legal compliance, including document review supplemented by visits to the workplace.

- Inspections usually refer to verification of physical facilities and may refer to best practices, technical standards, internal company standards, legal compliance and other topical issues.

Monitoring may be supplemental to audits or inspections and can be defined as the investigation of a situation in a workplace for which insufficient information is available to demonstrate adequate control, by providing detailed information to highlight any problems and to define future procedures. Special monitoring would normally be undertaken at the commissioning stage of new facilities, following major modifications either to facilities or procedures, or when operations are being carried out under abnormal circumstances, such as following an accident. Special monitoring can be individual monitoring or workplace monitoring.

Evaluations can be performed on individual components or process sections or combined according to conditions and / or to optimize staff time.

Operator Qualifications and Testing

Qualifications and testing programs are designed to evaluate the operators. Ideally, the result of operator testing is utilized to develop training in areas that are identified as either weak or needing improvement.

Operator Training

A solid operator training program is essential to handling plant upset conditions as well as ensuring that emergency situations are handled immediately. For example, an operating team must be trained to immediately and correctly respond to a pump failure or pipeline rupture

It follows, therefore that all employees, including maintenance and contractors, involved with highly hazardous processes need to fully understand the safety and health hazards. In establishing training programs, employers must clearly define the employees to be trained and what subjects are to be covered in their training. Employers in setting up their training program will need to clearly establish the goals and objectives they wish to achieve with the training that they provide to their employees. These goals and objectives need to be tailored to each of the specific training modules or segments. Employers should describe the important actions and conditions under which the employee will demonstrate competence or knowledge as well as acceptable performance.

For example, operating personnel, who work in a control room or on control panels, would benefit by being trained at a simulated control panel o. Upset conditions of various types could be displayed on the simulator, and then the employee could go through the proper operating procedures to bring the simulator panel back to the normal operating parameters. A training environment could be created to help the trainee experience the full reality of the situation.

Realistic training can be very effective in teaching employees correct procedures while allowing them to also see the consequences of what might happen if they do not follow established operating procedures. An effective training program will allow the employee to fully participate in the training process and to practice their skills or knowledge in benign conditions.

Training programs should adhere to the following objective:

- Provide systems training to employees as a means of personal, professional and institutional development, to produce efficient and effective operators.
- Prevent workplace hazards.

- Increase work efficiency.
- Acquire new knowledge and skills related to the operator's activity in the field.

Tools

Hand tools are working utensils for individual use, which only require human driving force for actuation. Obviously, tools and a tool safety program are a key component of plant operations.

Main dangers and consequences associated with tools include:

- Blows and cuts to the hands.
- Eye Injuries.
- Sprains by overexertion.

Causes of injury to plant operators:

- Abuse
- Using inadequate or defective tools
- Using tools incorrectly.
- Tools abandoned in hazardous locations.
- Tools transported dangerously.
- Using poorly maintained tools.

Tool safety in plant operations:

- The employee is responsible for verifying the physical condition of the tools before use and operating only according to the manufacturer's instructions.
- Workers must wear specific PPE dependent upon the risks. (Dust, gases, vapors, sparks, splashes, or falling objects).
- Avoid unsafe environments when using tools.
- Keep tools in a safe place.

Management Of Hand Tools

Hand tool management is broken down into several steps.
Acquisition or the procurement of quality tools that are appropriate for the type of work and in consideration of the following:

- Materials to be worked and work environment.
- Acquisition of tools from companies of recognized quality and ergonomic design
- Training in the following areas:
- Choosing the right tool
- The correct use of each tool
- Elimination of damaged tools.
- Use of tools for other purposes than its design or exceedance of design limitations.

Planned Inspections

Every four months, the general condition of hand tools that are in workshops or work areas should be inspected.

6.4 Operation Procedures

Plant operation procedures encompass the tasks to be performed, data to be recorded, operating conditions to be maintained, samples to be collected, and safety and health precautions to be taken on a periodic basis. A subset of daily operation procedures for a gas plant would include the following tasks:

- Plant START and STOP procedure
- LAUNCH and RECEIVE pigs
- Routine control of operating parameters
- Determine Dew Point
- Measurement of oil Tanks / Condensate
- START and STOP of Gas Compressors
- START and STOP of Generators
- START and STOP of Air Compressors
- START and STOP Dehydration equipment
- Make Daily Report Production

6.5 Maintenance Procedures

In order to keep a gas plant operating at peak performance, the gas company must establish a rigorous periodic inspection and maintenance program for all plant, property and equipment. A typical program would include the following components and documents:

- List of equipment classification and maintenance systems
- Procedures for isolation of maintenance
- Preventive maintenance
- Overhaul procedure for gas engines
- Maintenance and inspection requirements
- Maintenance management of rotating equipment
- Maintenance facilities
- Maintenance glossary key terms

Schedule for periodic maintenance

Proper maintenance of plant equipment can significantly reduce the overall operating cost, while boosting the productivity of the plant. Although many management personnel often view plant maintenance as an expense, a more positive approach in looking at it is to view maintenance works as a profit center. The key to this approach lies in a new perspective of proactive maintenance approach.

Some of the common maintenance strategies are as follows:

- Breakdown Maintenance

This is one of the basic maintenance programs in the industry. The approach to maintenance is totally reactive and only applicable when the equipment needs to be fixed. This strategy has no routine maintenance task and can be also described as a "no scheduled maintenance strategy." To rectify the problem, corrective maintenance is performed. Thus, this activity may consist of repairing, restoration or replacement of components. The strategy is limited to the corrective maintenance activity only.

- Preventive Maintenance

This is a time-based maintenance strategy where on a predetermined periodic basis, (either calendar or running time) equipment is taken off-line, opened up and inspected. Based on visual inspection, repairs are made and the equipment is then put back on-line. Thus under this equipment maintenance strategy, replacing, overhauling or remanufacturing an items is done at a fixed intervals regardless of its condition at the time. Although this is a well-intended strategy, the process can be very expensive. Nevertheless, some preventive maintenance is necessary as some regulation such as DOSH regulation require annual/bi-annual inspections of critical components.

- Predictive Maintenance

Predictive maintenance is a condition-based approach to maintenance. This approach is based on measuring equipment condition in order to assess whether equipment will fail during some future period, and then taking action to avoid the consequences of that failure. This is where predictive technologies (i.e. vibration analysis, infrared thermographs, ultrasonic detection, etc.) are utilized to determine the condition of equipment, and used to determine necessary repairs. Apart from the predictive technologies, statistical process control techniques, equipment performance monitoring or human senses are also adapted to monitor the equipment condition. This approach is a more economically feasible strategy as labor, material and production schedules are much more efficient.

- Proactive Maintenance

Unlike the three type of maintenance strategies discussed above, proactive maintenance can be considered as another approach to maintenance strategy. Proactive maintenance concentrates on the monitoring and correction of root causes to equipment failures. The proactive maintenance strategy is also designed to extend the in-service time for the equipment approaching the life-cycle limit and to prevent premature and expensive early replacement of critical components.

Table 6-1 Maintenance Strategy summarizes the four different strategies of maintenance which are commonly practiced in the natural gas processing industry.

Table 6-1 Maintenance Strategy

Maintenance Strategy	Maintenance Approach	Impact
Breakdown Maintenance	Fix- when broken	Large maintenance budget

Preventive Maintenance	Scheduled Maintenance	Periodic component replacement
Predictive Maintenance	Condition-based monitoring	Maintenance decision based on equipment condition
Proactive Maintenance	Detection of sources of failures	Monitoring and correcting failure root causes

In the past few years, a growing interest has emerged in the field of Reliability Centered Maintenance (RCM). Originally developed for the airline industry, RCM is a structured process to determine the equipment maintenance strategies required for any physical asset to ensure it continues to fulfill its intended functions in its present operating context. The goal of RCM is to identify the critical equipment in any process, and based on this information, design a customized preventive/predictive maintenance strategy for the organization. RCM initiatives, however, involve a tremendous amount of resources, time, and energy. Although the process is an extremely time consuming and expensive, it has been attributed to large increases in plant efficiency.

Upset conditions

It is said that almost anyone can operate a processing plant that runs smoothly. It is when the process goes wrong, that separates the proficient operator from those less able. Process Safety Management is a program designed to equip process operators to be able to respond to any "upset" condition before a major safety or environmental incident occurs. The procedure must detail:

- What could happen
- How to detect if an upset is occurring (or is about to occur)
- What the result could be if swift and correct action is not taken (how the situation could escalate)
- What actions to take

Any process that fails will necessarily cost the organization money. In other words, a process upset will create one or more losses: lost sales, customer dissatisfaction, wasted material, wasted time, broken equipment, overtime to try again, upset schedules, among others. For this reason, all processes should be evaluated to identify potential losses, the potential consequences of a loss, and how to ensure the loss does not happen.

By having a thorough description of the potential process upsets and corresponding procedures on detection and response, the operator is equipped to become more capable at maintaining process control. Because ultimately, prevention of something going wrong is in nearly all cases the result of doing all things related to the procedure correctly.

Emergency Planning

Emergency or immediate action planning is a subject of international best practices and must be incorporated in all facets of plant operations. Perhaps the most common mistake when it comes to emergency planning is the failure to ensure that all employees understand emergency procedures and have the opportunity to periodically practice them. Simply stated, emergency planning is utilized to define actions and mechanisms for a timely, adequate and

coordinated response to emergencies that may affect people, environment and property. Standard components of an emergency plan include:

- Plant Emergency Plan
- List of emergency equipment such as an emergency plant tank transport truck
- Communications and actions in case of fire
- Communications and actions in case of spill
- Communications and medical brigade actions
- Establishment of personnel meeting areas to confirm that all employees are accounted for

Valve alignment

Regardless of the type of control system that is utilized in a gas plant, process control comes down to the correct and timely operation of valves. Valve alignment is another subset of operations which requires that records for all plant valves be maintained. Typically, these records include valve specification and if necessary, calibration data. In addition to the records, it is essential that plant operators have complete visibility into the real-time position of all valves. This update can be either electronic or manual but it must include a complete status detailing which valves are open, closed or out of service. Valves that are annotated as being out of service would typically refer to another process known as lock out/tag out which will be covered later in this report.

Logs and records

Valve alignment, discussed in the preceding section, is a subset of a plant logs and records program. Plant operators typically maintain logs that detail the day's activities to include equipment and process status, temperatures and pressures, volumes, etc. In addition to being a common best practice, a quality logs and records program will also ensure that shift changes occur seamlessly and efficiently. Most companies utilize an operations pass down log, similar to the one included below. Off going operators pass critical information as to previous operations, discrepancies, action items, etc. to oncoming operators. In this manner, the plant can operate continuously with regardless of the number of requisite shift changes.

On each shift the operator should record activities, particularly those that required repairs or may result in needed future work.

Company Logo	OPERATOR SHIFT LOG	Rev:
Place:	Date:	
DAY OPERATOR:	NIGHT OPERATOR:	

1. PERFORMED ACTIVITIES	
Date	Description

2. MONITOR OPERATIONS	
Date	Description

Outgoing Operator	Incoming Operator
NAME:	NAME:
SIGNATURE:	SIGNATURE:
NAME:	NAME:
SIGNATURE:	SIGNATURE:

Figure 6-6-10 Operator Shift Log

6.6 Safety Equipment/Personal Protective Equipment

The provision of safety equipment to all employees is an additional task assigned to operations and specifically the management. In fact, many companies place the responsibility on management to ensure that a risk assessment is conducted on all operations, activities and locations within the site, with adequate control measures established and implemented. All procedures where HSE is relevant shall incorporate a basic safety principle known as the hierarchy of controls. This simply states that engineering and administrative controls shall be established and implemented prior to the establishment of PPE controls. In other words, PPE shall never be the first consideration for adequate control measures. Many companies also require that management shall ensure that all employees wear/use required PPE when working on, in, or around any site, shop or warehouse environment where there is an actual or potential hazard that has not been adequately controlled through engineering and administrative controls.

As a minimum, regardless of the control measures on, in, or around any site, shop or warehouse, the following PPE shall always be worn.

- Protective headwear;
- Hearing protection;
- Protective eyewear; and

- Protective footwear.
- Coverall with long sleeves

Additional PPE may be required for a particular operation, activity and/or location, and are subject to the risk assessments and subsequent control measures.

Office personnel and visitors shall wear the minimum PPE on or in any site, shop or warehouse environment. PPE is not required in areas such as offices, meeting rooms, enclosed vehicles or designated areas that are strictly protected through engineering means and where there is no risk of an actual or potential hazard leading to harm. In the event that an employee has his/her own PPE and wishes to use it as their own preference, the proposed PPE shall be subject to inspection and approval by a safety representative.

Regardless of whether PPE is provided or personally owned, all PPE shall meet the requirements of company procedures, including but not limited to, training, inspection, use and care. PPE of a more critical nature, such as respiratory protection and escape packs, shall be provided by the gas company only. Any PPE found to be damaged, defective, altered or otherwise not in compliance with the requirements shall be:

- Immediately removed from service;
- Tagged as being defective;
- Stored separately from those to be in good condition; and
- Replaced or repaired immediately.

In the event that a piece of PPE is removed from service and a replacement cannot be immediately provided, then the operations and/or activities requiring the PPE shall not be permitted until such time as adequate protection can be assured.

PPE Hazard Assessment:

Management is also typically responsible to ensure that all job-related exposure is assessed to determine what PPE is required. The PPE assessment shall include the following, at a minimum:

- General health and safety considerations;
- Potential work environment hazards;
- Potential and actual task related hazards;
- Existing and additional control measures;
- Appropriate PPE respective PPE requirements taking into account engineering controls;
- Duration and type of exposure;
- Accurate assessment and procurement; and
- Review of incidents and employee input.

Management shall select PPE according to the following criteria:

- Assessment results; Aspects and Hazards Register
- Degree of protection the PPE provides;
- Degree of comfort, dexterity, ability to wear/use and suitability;

- Meet or exceed recognized Standards, such as American National Standartds Institute (ANSI) or British Standards; and
- Site specific requirements (if applicable and more stringent).

6.7 Safety Training

Safety training is a process designed to reduce accidents, improve performance and build a corporate culture that has HSE as an ethical value. If this process is effective, attitudes and behavior of staff reflect respect for the health and safety at work, and also demonstrate respect for the environment.

Management is responsible to ensure that all employees are trained prior to job assignment on the following requirements:

- Workplace hazard assessments and control measures;
- Hierarchy of Controls principle;
- Selection of proper PPE, including selection of compatible PPE when required;
- Capabilities and limitations of respective PPE;
- Proper use/wearing, care, storage and fit of respective PPE;
- Inspection prior to use;
- Removal and replacement process;
- This procedure overall;
- Any site specific procedures and/or requirements; and
- Awareness of manufacturer's instructions.

All training shall include:

- Attendance Sign-in;
- Demonstration of competence to supervisor / evaluator; and
- Evaluation sign-off by competent evaluator.

Management shall ensure employees receive refresher training or awareness as appropriate and as often as is necessary, but in any case, at least annually.

While Management may delegate safety training and adherence to safety practices, Management is ultimately responsible for the implementation and execution of all aspects of safety.

Schedule for periodic retraining

Employers need to periodically evaluate their training programs to see if the necessary skills, knowledge and routines are being properly understood and implemented by their trained employees. Training program evaluations will help employers to determine the amount of training their employees understood, and whether the desired results were obtained. If, after the evaluation, it appears that the trained employees are not at the level of knowledge and skill expected, the employer will need to revise the training program, provide retraining, or provide more frequent refresher training sessions until the deficiency is resolved.

Those who conducted the training and those who received the training should also be consulted as to how best to improve the training process. If there is a language barrier, the language known to the trainees should be used to reinforce the training messages and information. Careful consideration must be given to assure that employees

including maintenance and contract employees receive current and updated training. For example, if changes are made to a process, impacted employees must be trained in the changes and understand the effects of the changes on their job tasks (e.g., any new operating procedures pertinent to their tasks).

6.8 Chemical Storage and Handling

The safe handling and storage of chemicals is another key component of both operations, maintenance and safety, which can be effectively managed through a program of:

a. Inventory control,

b. Labeling,

c. Safe work practices,

d. Secondary containment and spill response,

e. Storage by compatible classes and in appropriate cabinets, and

f. Special controls for highly hazardous substances.

Inventory Control

1. Chemicals are to be purchased only in the quantities needed and in containers of the smallest practical size. Although the cost may be higher, significant savings will be gained by reduced hazardous waste disposal or cleanup costs.
2. Chemical containers should be plastic bottles, or shatter-resistant plastic coated glass bottles, whenever possible. Glass containers should be avoided to reduce the risk of spills when dropped or damaged.
3. Chemicals shall be inventoried at least annually and excess stocks are to be shared or distributed to other departments to minimize waste.
4. Products that could also be purchased for home use, such as soap, oil, or cleaning sprays, must be part of the chemical inventory and have a material safety data sheet (MSDS) on file if the product will be used in an occupational setting and could cause a health exposure in the workplace.

Labeling

1. All bottles, containers, and other apparatus containing chemicals shall be accurately and clearly labeled as to contents, hazards, and where practical, the appropriate precautions required when handling the chemical. Labels on chemical containers are not to be removed or altered, particularly the manufacturer's original label. Empty chemical containers must never be reused for another purpose, even if the labeling is changed. Reactions with new liquid and residual chemical could be extremely dangerous.
2. In addition, peroxide-forming compounds must be labeled as to the date of receipt by the lab and the date of opening.
3. There are three levels of complexity to labeling: original container, secondary transfer containers, and small container (vials, flask, and beakers) for immediate, same-day use. The labels should serve as backup to hazard communication training.

a. The manufacturer's original labels must contain the required OSHA information:

(1) Name of chemical or solution;

(2) Manufacturer name and emergency telephone number;

(3) Hazard warning (health effect or target organs).

b. For laboratory-prepared solutions and/or when chemicals are transferred to secondary containers not intended for immediate use, labels should include:

(1) Name (no abbreviations) of the chemical and its concentration.

(2) For prepared solutions: date prepared, hazard warning on the most serious health or safety hazard posed (consult MSDS). Stickers can be applied indicating "corrosive," "carcinogen," "water-reactive", "flammable", etc. If space allows, or if special precautions are critical, expand the hazard warning to include the target organ and the required protection (e.g. "corrosive, esp. to skin and eyes. Use gloves and goggles").

C) Containers for immediate (same day) use should be labeled with the chemical name and its concentration.

Safe Handling and Transfer

1. Transport of chemicals within the facility must be conducted with methods and materials that prevent the risk of breakage. Hand carried chemicals should be placed in unbreakable secondary containers such as bottle carriers or acid-carrying buckets. Wheeled carts used to transport chemicals should have side guards and lipped surfaces capable of containing a break, and sturdy wheels that move easily over uneven surfaces. DOT shipping containers make excellent secondary containment for transport across the building.
2. Staff are to have available protective aprons, gloves, and goggles when transporting chemicals.
3. Freight-only elevators are to be used for transport. Passenger elevators can be used ONLY if the elevator use is temporarily restricted to chemical transport.
4. Class I flammable liquids (any liquid having a flash point below 100 ^{o}F) shall not be stored or transferred from one vessel to another in an exit access corridor, open plan building, or ancillary spaces unprotected from the exit access corridor.
5. Transfer of Class I liquids to smaller containers from bulk stock containers not exceeding 5 gallons in capacity shall be performed in a laboratory hood, in an area provided with ventilation adequate to prevent accumulations of flammable vapor exceeding 25% of the lower flammable limit, or within an inside liquid storage area approved for dispensing.
6. Class I liquids shall not be transferred between conductive containers of greater than 1.1 gallons, unless the containers are bonded and grounded (the process of providing an electrically conductive pathway - usually by clipping connecting wires - between a dispensing container and a receiving container [bonding], and the receiving container and an earth ground).

7. Transport between facilities. To the extent possible, chemicals (including fluid-preserved collections containers) used by SI employees for SI operations should be transported using SI vehicles only.
    a. All transport of chemicals between facilities shall be approved by the employee's supervisor as part of official duties.
    b. Transport of chemicals in privately owned vehicles should be limited.
    c. If chemicals must be transported, the driver must:
        (1) Ensure that all containers are secured in the vehicle (e.g., bed of a pickup truck).
        (2) Transport chemicals in their original containers, as practical. Keep containers tightly closed to prevent spills.
        (3) Have a copy of the MSDS for the chemical.
        (4) Never transport chemicals in the passenger compartment of a vehicle or in an area where food is being transported.
        (5) Load containers so as to prevent movement during transport. (i.e., over-pack in secondary container)
        (6) Have a spill kit readily accessible in the event of a small spill. In the event of a large spill while in transport, notify 911 to request assistance with chemical spill cleanup.
    d. Vehicles that transport chemicals shall be inspected by the operator for possible contamination prior to departure and upon return. Vehicles determined to be contaminated must be decontaminated according to the MSDS.

Secondary Containment and Spill Control

1. Liquid chemicals must be stored in corrosion-resistant trays or on spill pallets or other secondary containment to contain a break or leak.
2. Concentrated acids and bases should be stored in acid or caustic storage cabinets. If possible, keep corrosives stored in their original (e.g. Styrofoam cubes) shipment containers.
3. In the event of a chemical spill, try to turn off all reaction apparatus, especially heat sources, notify supervision immediately and follow the response steps in the facility's "Hazardous Chemicals Emergency Spill And Leak Control Procedures, Reporting Person's Check List."

Cabinet and Shelf Storage - General Precautions

1. Cabinets and other storage areas are to be marked with the general class of chemical stored, and any other pertinent warnings.
2. Storage areas should have good general ventilation and be well lighted.
3. On shelves, containers should be staggered for easy access, with labels facing out. Do not alphabetize stored chemicals; separate by compatibility.
4. Heavy and large containers are to be placed on bottom shelves. Chemicals, especially liquids, should

be stored below eye level. Larger containers should be stored on lower shelves. Exposure to heat or direct sunlight must be avoided. Avoid storing chemicals on the floor unless in approved shipping containers. Minimize open shelf or bench top storage, except for those chemicals being

5. Cabinets specifically for corrosives (either acids or bases) must have corrosion-resistant paint. Flammable storage cabinets must be constructed to meet the National Fire Protection Association's (NFPA's) – "Flammable and Combustible Liquids Code" - and provide an airtight seal; vent holes must be kept covered and flame-arrestor kept in place. Flammable liquids cabinets must be listed by UL or approved by FM Approvals for storing flammable liquids.
6. Oxidizers MUST be stored in separate cabinets from flammables and combustibles. Oxidizers, explosives, and organic peroxides must be separated from combustibles and placed in a metal cabinet, or in an approved dry, cool, and well-ventilated location.
7. If acids and bases must be stored together in the same cabinet, place each in separate secondary containers (non-reactive trays) on opposite sides of the cabinet to minimize intermingling in case of a spill or drip (in other words, do not store all the acids on one shelf, and all the bases on the shelf below).
8. Initially assign each chemical to broad hazard classes, for example: flammable, corrosive (acids and bases), reactive oxidizer, or reducer, special hazard (air/water reactive, peroxide forming chemical, store at reduced temperature or under an inert atmosphere, highly toxic).
9. Chemicals that possess more than one hazard (i.e., oxidizer and corrosive) are assigned to the class that, in the judgment of the Safety Coordinator, represents the greater hazard for that work area.

Refrigerators and Freezers - Flammable Storage

1. All refrigerators or freezers shall be distinctly marked as to whether it is suitable for the storage of flammable liquids.
2. All refrigerators housing flammable liquids shall be of the "flammable safe" or explosion proof variety, and shall be UL Listed or FM Approved for such use. Standard household variety refrigerators shall not be used to store flammable liquids.
3. NOTE: Refrigerators, freezers, and cooling equipment located in a work area designated as a Class I location, shall be approved for use in a Class I, Division 1 or 2 locations and shall be installed per the NEC.
4. Flammable liquids stored in refrigerated equipment shall be in closed containers.

Storage of Chemicals by Class

1. Flammables and Combustibles. Flammables are chemicals that have a flash point less than 100oF. Combustible chemicals have flash points that are 100-200oF. If stored or used improperly, flammables and combustibles can be a fire hazard.
    a. Examples: benzene, alcohols, H_2S, acetone, ethers, organic acids (i.e., glacial acetic acid)

b. The quantity of hazardous chemicals within a laboratory unit or in a laboratory work area, that is stored in the open, shall be limited to the minimum necessary to perform required tasks. However, in no case should they exceed the quantity allowed by the laboratory unit classifications, as indicated in Attachments 3 and 4 of this Chapter.

c. To the greatest degree possible, the storage of flammable liquids in a work area, outside of an approved flammable liquids cabinet or storage room, should be limited to what is needed for a single day's use. Otherwise, flammable liquids should be stored within an approved flammable liquids cabinet when not in use.

d. Bulk supplies of flammable/combustible liquids (such as pure material in drums) shall be stored in an approved flammable liquids storage room.

2. Corrosives: Acids. Acids are corrosive and react violently with bases. There are two main groups of acids: organic acids, and inorganic (mineral) acids. Some inorganic (mineral) acids are oxidizers and will react with organics, increase burning rate of combustibles and contribute an oxygen source to a combustion reaction. Therefore, inorganic (mineral) acids should be stored separately from organic acids.

   a. Examples of inorganic OXIDIZING acids: per chloric acid (particularly dangerous at elevated temperature), chromic acid, nitric acid, H_2SO_4 (particularly dangerous at elevated temperature).

   b. Examples of inorganic MINERAL acids: hydrochloric acid, hydrofluoric acid, phosphoric acid

   c. Examples of organic acids: acetic acid, formic acid, butyric acid, propionic acid, picric acid, acrylic acid.

   d. Nitric acid shall be stored separate from other acids.

   e. Segregate acids from bases and active metals such as potassium and magnesium.

   f. Segregate acids from chemicals that could generate toxic gases upon contact, such as sodium cyanide.

   g. Segregate acids from solvents such as toluene and xylene.

   h. Segregate oxidizing inorganic acids from organic acids, flammable and combustible materials. Most mineral acids can be stored together, except per chloric acid.

3. Organic acids (e.g., glacial acetic acid) can be combustible and should be stored separately or with flammables rather than with inorganic acids. Several inorganic acids are oxidizers and therefore, incompatible with organic acids

4. Per chloric acid and picric acid require special handling.

   a. Picric acid is reactive with metals or metal salts and is potentially explosive when dry. Contaminated picric acid is particularly dangerous, as picrate metal salts are potentially explosive compounds. Picric acid must be stored wet with at least 10% water. Store picric acid in a cool, dry, non-ventilated area away from incompatibles or ignition sources.

   b. Per chloric acid at elevated temperature is a very strong oxidizer. It can react with metals, wood and other combustibles to form potentially explosive compounds.

5. Corrosives: Bases. Bases are corrosive and react violently with acids.

a. Examples: ammonium hydroxide, sodium hydroxide, calcium hydroxide, organic amines

b. Segregate bases from acids. Bases are also corrosive to skin and tissue. Pay meticulous attention to PPE when using bases.

6. Reactive :). Oxidizers react vigorously with reducing materials. The reaction can lead to fires or explosions. Oxidizers will increase the burning rate of combustible materials and contribute oxygen to a combustion reaction.

   a. Examples: halogens, ammonium persulfate, hydrogen peroxide, sodium dichromate, potassium permanganate, per chloric acid, at elevated temperature, ammonium nitrate (and other nitrate salts)

   b. Keep oxidizers away from flammables, combustibles (such as paper, wood) and other reducing agents.

7. Reactive: Reducers. Reducing materials react vigorously with oxidizers. The reaction can lead to fires or explosions.

   a. Examples: ammonia, carbon, air-reactive metals, metal hydrides, phosphorus, silicon, sulfur

   b. Store reducing materials away from oxidizers.

8. Water-reactive Chemicals. Water reactive materials react with water, water solutions, moisture, or humidity in the air to produce heat and/or flammable gases, which can ignite.

   a. Examples: sodium (elemental), potassium (elemental), lithium, calcium carbide, phosphorous pentachloride.

   b. Store water reactives away from any sources of water or moisture. Review manufacturer's recommendations for special storage conditions, such as under an inert atmosphere or, as in the case of elemental sodium, under mineral oil.

9. Peroxide Forming Chemicals. Potentially explosive peroxides are formed by a free-radical reaction of HCs with molecular oxygen. Distillation, evaporation or other concentration of the peroxide can cause an explosion in contaminated HCs.

   a. Examples: diethyl ether, tetrahydrofuran, acetaldehyde, isopropyl ether

   b. Store peroxide-forming chemicals away from light and heat. Carefully label all containers with the date received and the date opened. Monitor container dates and avoid keeping peroxide-forming chemicals on hand for more than a year after receipt and 6 months after opening.

6.9 Material spare parts determination

Equipment and machinery shall be purchased with spare parts required for first two years of operation as part of the project. Bulk materials and consumables for first year of facility equipment and machinery operation shall also be purchased as part of project. In addition to the materials included above, the gas company, based on reliability and availability information, might identify additional requirements for critical spare components associated with major pieces of equipment and machinery. To the extent possible, the plant or facility should be designed with standardized components such that inter-changeability of spare parts will be maximized.

Material Logistics and Warehousing

For onshore plants and facilities, a warehouse and storage facility shall be provided and suitably sized to store all spare parts, bulk materials, and consumables required for the ongoing operation and maintenance of the plant or facility.

- The warehouse shall provide sufficient office space for warehouse personnel.
- The warehouse shall provide environmentally controlled areas and materials handling facilities to meet the requirements of the items being stored. Provisions for inspection and maintenance of spare parts shall be incorporated into the design of the warehouse facilities.
- For onshore plants and facilities, a maintenance shop with suitable crane(s) shall be provided to carry out major maintenance activities on removable equipment and machinery. Separate shop areas shall be provided for mechanical, instrumentation, and electrical disciplines.
- The maintenance shop shall include sufficient office space for maintenance personnel and a sufficiently large size room for breaks, lunch, and dinner.
- The office spaces and lunchroom shall be air conditioned and heated.
- The warehouse, offices, shop areas, etc. shall be wired with LAN connections for computer access.
- Showers and a change room shall also be included.
- Paved parking areas shall be located next to the office building and also next to the maintenance shop. Spaces for parking shall be dependent on the number of maintenance and operating personnel at the facility.
- The warehouse shall utilize modern techniques and facilities for identification, consumption, and restocking of materials. These techniques shall be linked to the computerized maintenance management system.

6.10 Construction

Construction Safety

The majority of the natural gas processing plant life cycle is dedicated to operations and maintenance, however; the construction of these plants inevitably set the stage for future operations. While it is most likely that AGE will contract out the construction of gas plants, it is imperative that the AGE understand and mandate specific construction safety guidelines. The following section is not meant to be all encompassing but many of the hazards likely to be encountered during plant and pipeline construction are addressed. Many are self-explanatory such as basic site safety to include the use of PPE. Some issues, such as risk analysis, are a little more involved but are essential to construction safety.

Prior to commencement of construction, either AGE or their chosen contractor is expected to have completed a lot of pre-planning. Items to consider during this stage of the process include:

- A health & safety plan
- An occupational health and safety policy displayed
- An accident report book
- Induction training records
- Workplace inspection records
- Documented safe working procedures or method statements
- Protective clothing & equipment records
- MSDSs available
- Health & safety system manual

- Health and safety representatives appointed including management safety representative
- Contract-specific risk assessment conducted
- Emergency procedures and necessary training records

Once the initial planning is completed, focus should be on proper establishment of the construction site with emphasis on the some of the following items:

- Proper PPE prior to site access
- Proper signage to identify authorized personnel, presence of gas, other warnings, etc.
- Firefighting equipment and escape routes
- First aid facilities
- Identify existing power line, gas lines, etc. and ensure that they are clearly marked and excavated where necessary
- Fencing to control site entry
- Construction equipment operators and associated training/licensing
- Verify via load checking all slings and lifting apparatus
- Fall prevention
- Clear marking of excavations and holes to prevent falls
- Adequately support excavations to minimize risk of collapse, use of bell holes where required and continuous inspection

Planning and Coordination/Risk Assessment

Obviously, all hazards cannot be eliminated from a construction site. However, a solid focus on risk and risk assessment in all planning, coordination and execution tasks will serve to mitigate exposure and ensure that the construction site conditions are as safe as possible. There are many organizations and processes that can be utilized to help in the documentation and subsequent management of site risks such as the U.K.'s Health Safety Executive. In the United States, OSHA provides various safety processes and guidelines designed to control risk and ensure that proper documentation and mitigation methods in place. Like OSHA, the U.K.'s Health Safety Executive prescribes a process for risk mitigation. Their 5-step process, summarized below, is designed to identify issues, develop mitigation strategies and then implement a pattern of audit and improvement. The Health Safety Executive process follows and it is recommended that similar risk assessment processes be adopted by AGE and their contractors:

- STEP 1: Look for the hazards,
- STEP 2: Decide who might be harmed and how,
- STEP 3: Evaluate the risks and decide whether the existing precautions are adequate or whether more should be done,
- STEP 4: Record findings, and
- STEP 5: Review assessment and revise it if necessary.

Specific application of the above principles should be applied to all aspects of the construction site. When constructing a gas plant the most critical areas include electrical safety, power equipment safety, excavation, hazardous chemicals, confined space entry, slings/hoists, heavy machinery/construction equipment, welding safety, and PPE.

Determination of proper personnel for the Construction scope

Assuming that AGE would let a contract for the construction of additional gas plants, then AGE would be considered the client. As a client, it is imperative that the emphasis on safety be placed at the same level as cost and schedule.

Should AGE decide to take the work 'in-house', then the proceeding paragraphs would apply to AGE in place of the contractor. Personnel necessary to execute a construction project can be broken down into several categories each with their own set of responsibilities. The following list is not all inclusive but serves to show the type of personnel required to properly execute the construction project.

Contractors: The assumption is that AGE would let a turnkey contract for the construction and commissioning of gas plants. In this case, the contractor would be responsible for all aspects of the project and AGE would be in an advisory role.

Employees: The employees would be contractors responsible to their management for proper task execution, safe working environment, and efficient/schedule-oriented work.

Senior Site Management: This first line management is responsible to senior management and program management for all aspects of the job to include safety, procurement, planning, execution, scheduling, quality workmanship, and compliance.

Engineers, technical representatives: Engineers and related technical representatives ensure that the work is progressing according to plans and are available to assess to changes based on real world conditions.

Supervisors: Supervisors report to senior site management and can be broken down by discipline dependent upon the size and pace of the project. For example, it is common to have a welding supervisor, a fabrication supervisor, a civil works supervisor, etc. working on a gas plant project.

Safety: When safety is addressed it is very common to hear that safety is everyone's job and similar type language. On a typical job site, there will be safety personnel that oversee daily tasks and provide oversight on critical/high risk tasks. The safety department is entrusted to act without regard to schedule or profit when necessary.

QA/QC: This is an inherent component of any gas plant project and must be treated with the same level as safety. The expectation must be that QA/QC personnel must be active on the job site to ensure that all aspects of the contract are met and that specifications are complied with. QA/QC personnel typically oversee all processes to include procurement, welding, piping, civil works, safety, environmental, etc.

6.11 Safety Best Practices

Safety Program Defined

The goal of a safety program for an operating company (OPCO) in the gas industry is promotion of personnel and public safety. The OPCO intentionally mandates safe operating practices concentrating on personnel and public safety. It is intended that a safety program at an operating facility in the gas industry will follow practices and procedures to maintain safe working conditions for personnel engaged in production operations. Personnel safety is also called Occupational Safety and Health.

Safety processes, practices, and procedures (safe operating practices-SOPs) are made recognizing that owners, operators, contractors, and their personnel have separate responsibilities that may be contractual in nature. To ensure the safe performance of work covered by SOPs, each employer should provide training and instruction for its personnel. It is not the intent of SOPs to alter the contractual relationship(s) between the parties. The well or facility owner or operator should provide and the contractor should seek pertinent information that is known or assumed and that the contractor may need to assure a safe operation. At all times, the specific work activity being performed

should be under the immediate supervision of an authorized person who has the authority to commence, modify, or cease the work methods or operations, as necessary, to ensure the safety of affected personnel and the general public. The authorized person should observe changing conditions and act to improve, whenever required, the work methods to promote increased protection for the personnel.

Personnel Safety versus Process Safety

An operating gas facility would typically have a Process Safety Management program. The following table indicates the differences in focus between personnel safety programs and process safety programs.

Table 6-2 Personnel Safety And Process Safety Programs

Personnel Safety	Process Safety
Slips, trips, falls	Process Hazard Analysis
On site Hazard ID	Design for Safety
Safe Operating Practices	HAZOP - Hazard & Operability Study
Incident Reporting	Asset Integrity or Mechanical Integrity
Operating personnel Training	Human factors studies
JHA- Job Hazard Analysis	Material verification
Tailgate Safety Meetings	"As Low as Reasonably Possible"
PPE	Management of change
Unsafe Acts or Unsafe Conditions	Intrinsically safe
	LOPA - Layer of Protection Analysis
	Equipment Maintenance
	Process - Change Reporting
Personnel Safety Culture	Process Safety Culture
Field Operations/Shop Managers	Senior Executives
Operating Supervisors	Senior Management
Front Line Supervisors/Foremen	Engineering Management
Workers	Key Decision Makers
Personnel Safety Mgmt. System	Process Safety Mgmt. System
Management Involvement & Commitment	Leadership Commitment & Responsibility
Hazard Identification & Assessment	Identification & Compliance with Legislation & Industry Standards
Hazard Control	Employee selection, placement, competency & health assurance
Training	Workforce Involvement
Emergency Response	Communication with Stakeholders
Incident Reporting &Investigations	Hazard Identification & Risk Assess.
Communication- Records & Audit	Documentation, Records & knowledge
Joint Health & Safety Committee	Operating Manuals & Procedures
	Process & operational Status monitoring & handover
	Management of operational interfaces
	Standards and Practices
	Management of Change & Project Management
	Operational Readiness & Process Start-up
	Emergency Preparedness
	Inspection and Maintenance
	Mgmt. of Safety Critical Devices

Personnel Safety	Process Safety
	Work control, permit-to-work & test risk management
	Contractor & Supplier, Selection/Management
	Incident Reporting & Investigations
	Audit, Assurance, Management Review and Intervention

Personnel Safety Program Requirements

- Personnel shall be properly trained in relation to their job duties. Additionally, pre-job safety meetings that include all affected personnel, including contractors, should be held to review responsibilities for the operation(s) to be performed.
- Personnel should receive instruction in correct work methods to reduce chance of injury to themselves or fellow personnel.
- A safety program should be established and maintained. The following list details some of the areas that should be addressed in these procedures and practices:
    - Confined space entry
    - Contractor safety
    - Electrical safety
    - Emergency response
    - Prevention and protection
    - First aid
    - General safety rules
    - Hazard communication
    - Hazardous environment
    - Hot working/welding
    - Housekeeping
    - H_2S and sulfur dioxide
    - Lifting
    - Lockout/tag out (LOTO)
    - Blowdown and purging of piping systems
    - Other equipment safety (hoists, cranes, etc.)
    - Periodic reviews
    - PPE
    - Personnel training
    - Production equipment safety
    - Roles and responsibilities
    - Safe use of hand tools
    - Safety meetings
    - Transportation
    - Trenching and excavation
    - Any conditions or operations that may pose a risk to personnel

6.12 How to Implement a Formal Occupational Health and Safety Program

H_2S is a highly toxic gas. At concentrations as low as 10 ppm irritation of the eyes, nose, and throat is possible. The human nose can detect H_2S in concentrations as low as 0.02 ppm. However, the human sense of smell cannot be relied on to detect hazardous concentrations of H_2S. Higher concentrations and extended exposure to H_2S will desensitize the sense of smell. According to OSHA, concentrations required for different reactions by the human body are shown in the table below.

Table 6-3 OSHA H_2S Effects At Exposure Concentrations

Concentration (ppm)	Symptoms/Effects
0.00011-0.00033	Typical background concentrations
0.01-1.5	Odor threshold (when rotten egg smell is first noticeable to some). Odor becomes more offensive at 3-5 ppm. Above 30 ppm, odor described as sweet or sickeningly sweet.
2-5	Prolonged exposure may cause nausea, tearing of the eyes, headaches or loss of sleep. Airway problems (bronchial constriction) in some asthma patients.
20	Possible fatigue, loss of appetite, headache, irritability, poor memory, dizziness.
50-100	Slight conjunctivitis (gas eye) and respiratory tract irritation after 1 hour. May cause digestive upset and loss of appetite.
100	Coughing, eye irritation, loss of smell after 2-15 minutes (olfactory fatigue). Altered breathing, drowsiness after 15-30 minutes. Throat irritation after 1 hour. Gradual increase in severity of symptoms over several hours. Death may occur after 48 hours.
100-150	Loss of smell (olfactory fatigue or paralysis).
200-300	Marked conjunctivitis and respiratory tract irritation after 1 hour. Pulmonary edema may occur from prolonged exposure.
500-700	Staggering, collapse in 5 minutes. Serious damage to the eyes in 30 minutes. Death after 30-60 minutes.
700-1000	Rapid unconsciousness, "knockdown" or immediate collapse within 1 to 2 breaths, breathing stops, death within minutes.

H_2S is highly flammable and will combust in air at concentrations from 4.3 to 46.0 volume percent. H_2S vapors are heavier than air and may migrate considerable distances to a source of ignition. Gaseous CO_2 is a naturally occurring gas that is 50% heavier than air and is colorless and odorless. It is also a principal by-product of combustion. CO_2 is inactive and therefore non-flammable. CO_2 will displace oxygen and can create an oxygen-deficient atmosphere resulting in suffocation. The principal hazard of CO_2 is exposure to elevated concentrations. The atmospheric concentration immediately hazardous to life is 10% (volume). Because CO_2 is heavier than air, its hazard potential is increased, especially when entering tanks and vessels. A common but erroneous belief is that CO_2 simply acts as an asphyxiant by lowering the oxygen level below the 16 percent minimum necessary to sustain life (at sea level).

Although this is frequently the case in most serious accidents, CO_2 begins to have a noticeable effect on normal body functions at about two to three percent. The concentration of CO_2 in the blood affects the rate of breathing, a measurable increase resulting from a level of one percent in the inspired air. Anyone engaged in the design or operation of a facility in which H_2S and/or CO_2 are present should seek expert advice for detailed safety precautions and mechanical design considerations.

Confined Space Entry

Is working in a confined space hazardous?

Many workers are injured and killed each year while working in confined spaces. An estimated 60% of the fatalities have been among the would-be rescuers. A confined space can be more hazardous than regular workspaces for many reasons. To effectively control the risks associated with working in a confined space, a Confined Space Hazard Assessment and Control Program should be implemented for the workplace. The regulations can vary slightly from jurisdiction to jurisdiction. Regardless of the jurisdiction, the cardinal rule is: If the confined space cannot be made safe for the worker by taking precautions then workers should NOT enter the confined space until it is made safe to enter by additional means.

What is a confined space?

Generally speaking, a confined space is an enclosed or partially enclosed space that:

- is not primarily designed or intended for human occupancy
- has a restricted entrance or exit by way of location, size or means
- Can represent a risk for the health and safety of anyone who enters, due to one or more of the following factors:
    - its design, construction, location or atmosphere
    - the materials or substances
    - work activities being carried out in it, or the
    - mechanical, process and safety hazards present

Confined spaces can be below or above ground. Confined spaces can be found in almost any workplace. A confined space, despite its name, is not necessarily small. Examples of confined spaces include silos, vats, hoppers, utility vaults, tanks, sewers, pipes, access shafts, truck or rail tank cars, aircraft wings, boilers, manholes, manure pits and storage bins. Ditches and trenches may also be a confined space when access or egress is limited.

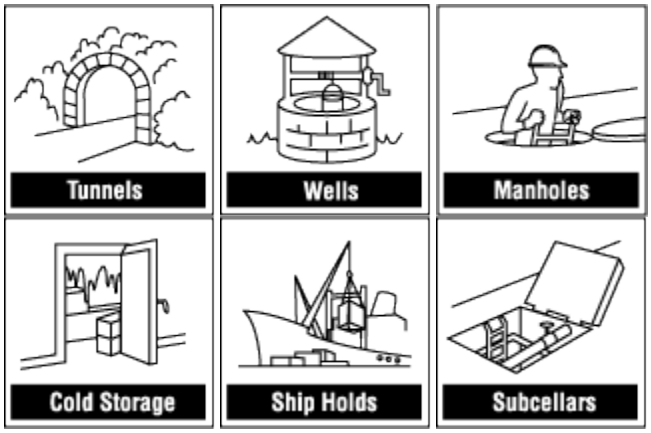

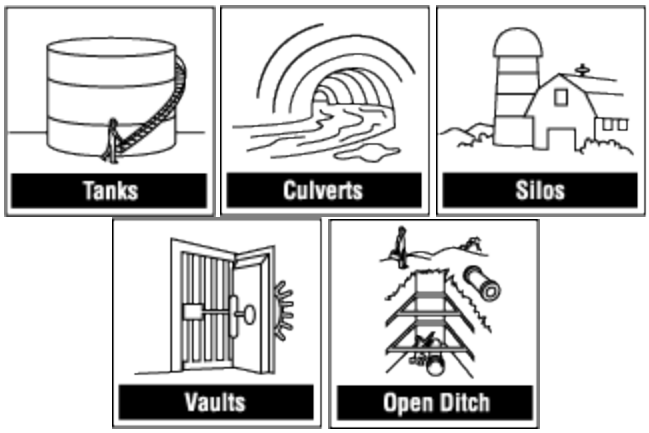

Figure 6-6-11 Examples Of Confined Spaces

What are the hazards in a confined space?

All hazards found in a regular workspace can also be found in a confined space. However, they can be even more hazardous in a confined space than in a regular worksite.

Hazards in confined spaces can include:

- Poor air quality: There may be an insufficient amount of oxygen for the worker to breathe. The atmosphere might contain a poisonous substance that could make the worker ill or even cause the worker to lose consciousness. Natural ventilation alone will often not be sufficient to maintain breathable quality air.
- Chemical exposures due to skin contact or ingestion as well as inhalation of 'bad' air.
- Fire Hazard: There may be an explosive/flammable atmosphere due to flammable liquids and gases and combustible dusts which if ignited would lead to fire or explosion.
- Process-related hazards such as residual chemicals, release of contents of a supply line.
- Noise.
- Safety hazards such as moving parts of equipment, structural hazards, entanglement, slips, falls.
- Radiation.
- Temperature extremes including atmospheric and surface.
- Shifting or collapse of bulk material.
- Barrier failure resulting in a flood or release of free-flowing solid.
- Uncontrolled energy including electrical shock.
- Visibility.
- Biological hazards.

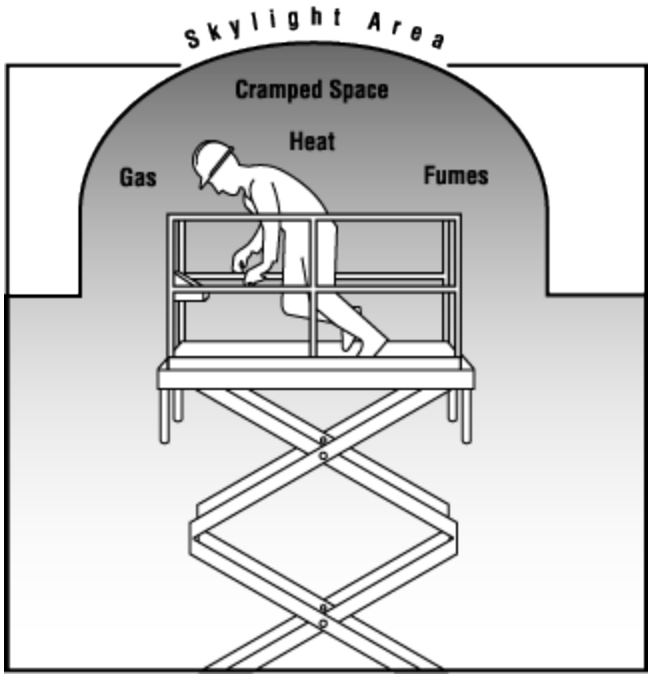

Figure 6-6-12 Example of Cramped Area Confined Space

Why is working in a confined space more hazardous than working in other workspaces?

Many factors need to be evaluated when looking for hazards in a confined space. There is smaller margin for error. An error in identifying or evaluating potential hazards can have more serious consequences. In some cases, the conditions in a confined space are always extremely hazardous. In other cases, conditions are life threatening under an unusual combination of circumstances. This variability and unpredictability is why the hazard assessment is extremely important and must be taken very seriously each and every time one is done.

Some examples include:

- The entrance/exit of the confined space might not allow the worker to get out in time should there be a flood or collapse of free-flowing solid, such as a ditch cave in
- Self-rescue by the worker is more difficult.
- Rescue of the victim is more difficult. The interior configuration of the confined space often does not allow easy movement of people or equipment within it.
- Natural ventilation alone will often not be sufficient to maintain breathable quality air. The interior configuration of the confined space does not allow easy movement of air within it.
- Conditions can change very quickly.
- The space outside the confined space can impact on the conditions inside the confined space and vice versa.
- Work activities may introduce hazards not present initially.

What should be done when preparing to enter the confined space?

The important thing to remember is that each time a worker plans to enter any work space, the worker should determine if that work space is considered a confined space. Be sure the confined space hazard assessment and control program has been followed.

The next question to ask is - Is it absolutely necessary that the work be carried out inside the confined space? In many cases where there have been deaths in confined spaces, the work could have been done outside the confined space! Before entering any confined space, a trained and experienced person should identify and evaluate all the existing and potential hazards within the confined space. Evaluate activities both inside and outside the confined space.

Air quality testing: The air within the confined space should be tested from outside of the confined space before entry. Care should be taken to ensure that air is tested throughout the confined space - side-to-side and top to bottom. A trained worker using detection equipment which has remote probes and sampling lines should do the air quality testing. Always ensure the testing equipment is properly calibrated and maintained. The sampling should show that:

The oxygen content is within safe limits - not too little and not too much.

- A hazardous atmosphere (toxic gases, flammable atmosphere) is not present.
- Ventilation equipment is operating properly.

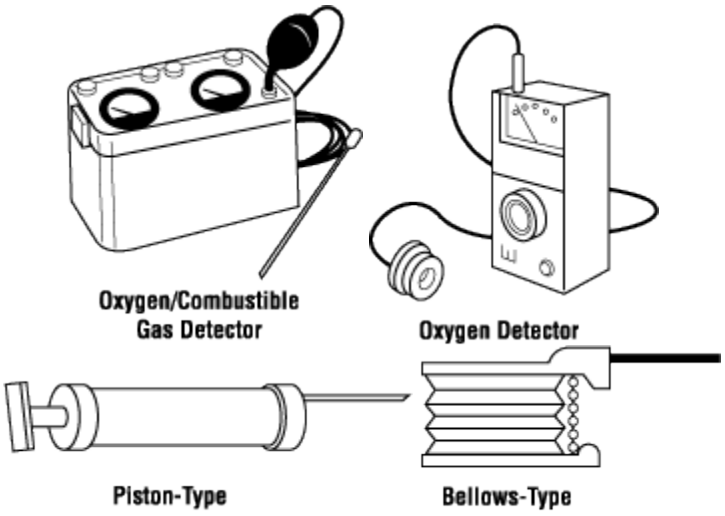

Figure 6-6-13 Hazardous Atmosphere Testing Equipment

The results of the tests for these hazards are to be recorded on the Entry Permit along with the equipment or method(s) that were used in performing the tests. Air testing may need to be ongoing depending on the nature of the potential hazards and the nature of the work. Conditions can change while workers are inside the confined space and sometimes a hazardous atmosphere is even created by the work activities in the confined space.

How are hazards controlled in confined spaces?

The traditional hazard control methods found in regular worksites can be effective in a confined space. These include engineering controls, administrative controls and PPE. Engineering controls are designed to remove the hazard while administrative controls and PPE try to minimize the contact with the hazard. However, often because of the nature of the confined space and depending on the hazard, special precautions not normally required in a regular worksite may also need to be taken. The engineering control commonly used in confined spaces is mechanical ventilation. The

Entry Permit system is an example of an administrative control used in confined spaces. Personal protective equipment (respirators, gloves, ear plugs) is commonly used in confined spaces as well.

How is air quality maintained?

Natural ventilation (natural air currents) is usually not reliable and not sufficient to maintain the air quality. Mechanical ventilation (blowers, fans) is usually necessary to maintain air quality.

- If mechanical ventilation is provided, there should be a warning system in place to immediately notify the worker in the event of a hazard or a failure in the ventilation equipment.
- Care should be taken to make sure the air being provided by the ventilation system to the confined space is 'clean' throughout the entire space.
- Ease of air movement throughout the confined space should be considered because of the danger of pockets of toxic gases still remaining even with the use of mechanical ventilation.
- Do not substitute oxygen for fresh air. Increasing the oxygen content will significantly increase the risk of fire and explosion.
- The use of mechanical ventilation should be noted on the entry permit
- Ensure air being removed from the confined space is exhausted away from workers on the outside.

How are fire and explosion prevented?

Work where a flame is used or a source of ignition may be produced (hot work) should not normally be performed in a confined space unless:

- All flammable gases, liquids and vapors are removed before the start of any hot work. Mechanical ventilation is usually used to
    - Keep the concentration of any explosive or flammable hazardous substance less than 10% of its Lower Explosive Limit AND
    - Make sure that the oxygen content in the confined space is not enriched. Oxygen content should be less than 23% but maintained at levels greater than 18%. (These numbers can vary slightly from jurisdiction to jurisdiction.)
- Surfaces coated with combustible material should be cleaned or shielded to prevent ignition.
- Do not bring fuel or fuel containers into the confined space (e.g., gasoline, propane), if possible. Ensure welding equipment is in good condition.

Where appropriate, use spark resistant tools, and make sure all equipment is bonded or grounded properly.

While doing the hot work, the concentrations of oxygen and combustible materials must be monitored to make certain that the oxygen levels remain in the proper range and the levels of the combustible materials do not get higher than 10% of the Lower Explosive Limit. In special cases it may not be possible, and additional precautions must be taken to ensure the safety of the worker prior to entering the confined space.

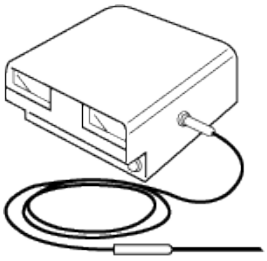

Continuous Monitor
for Oxygen and
Combustible Gases

Figure 6-6-14 Combustion Monitor

If potential flammable atmosphere hazards are identified during the initial testing, the confined space should be cleaned or purged, ventilated and then tested again before entry to the confined space is allowed. Only after the air testing is within allowable limits should entry occur as the gases used for purging can be extremely hazardous.

How are energy sources controlled?

All potentially hazardous energy sources such as electrical, mechanical, hydraulic, pneumatic, chemical, or thermal must be de-energized and locked out prior to entry to the confined space so that equipment cannot be turned on accidentally.

What are other safety precautions?

Many other situations or hazards may be present in a confined space. Be sure that all hazards are controlled including:

- Any liquids or free-flowing solids are removed from the confined space to eliminate the risk of drowning or suffocation.
- All pipes should be physically disconnected or isolation blanks bolted in place. Closing valves is not sufficient.
- A barrier is present to prevent any liquids or free-flowing solids from entering the confined space.
- The opening for entry into and exit from the confined space must be large enough to allow the passage of a person using protective equipment

Pipeline Ditch Safety

In addition to confined space issues, pipeline ditches have several distinct issues that should be addressed before entering or working in a pipeline ditch

- If the work can be done outside of the pipeline ditch, it should be
- Ditches must have sufficient slope to mitigate collapse, especially in sandy or wet soils
- There should be two ways to exit the ditch, such as ladders or gradually sloped entry ways
- When welding is taking place in a ditch, such as is necessary for tie ins, a person should be stationed at the top of the ditch with a fully charged fire extinguisher
- Never allow personnel to stand in a ditch while pipe or other heavy objects are being lowered in over that person's head

- Do not operate movable equipment near the top of the ditch while personnel are in the ditch
- Always check for leaks with an explosive gas detector prior to entering a pipeline ditch

7. Policies and Procedures Required for Gas Processing Operations

7.1 Hazard Identification and Evaluation

Hazard identification and evaluation is a key element of managing risks. In order to assess risk, both the hazard and the potential for exposure must be evaluated. Risk assessment provides techniques to evaluate both the severity of the harm and likelihood that it will occur.

7.2 Concepts

Hazard - The way in which an object or a situation may cause harm: A hazard exists where an object or situation has the ability to cause harm. Such hazards include uneven pavement, unguarded machinery, an icy road, a fire, an explosion and a sudden escape of toxic gas. When a hazard triggers a series of escalating hazards, these escalating hazards are referred to as cascading hazards.

Risk - the combination of the likelihood of harm and the severity of that harm. Risks are all around us in our daily lives. We all conduct risk assessments constantly, whether consciously or sub-consciously. When deciding whether to cross the road, whether to eat healthy food, or what sports to participate in, we make judgments about the hazards involved and assess the risk before taking action. Just as there are risks in our everyday lives, so there are risks in activities that companies perform and in the products they make.

Dangerous - Something that is inherently or naturally unsafe. Materials, objects and work tasks can be dangerous to workers.

Exposure Potential - The likelihood that the hazard will result in harmful consequences: Safeguards or protection layers will influence the potential for the hazard to result in harmful consequences. The presence of a potential receptor in the area and its distance from the hazard will also influence the extent of the risk. For example, a fire or explosion may cause damage to nearby process structures, but will not harm people if there are no people present at the time. Additionally, if workers are housed in a blast-resistant building, their likelihood of harm from an explosion is minimized.

Receptor - Any entity that receives or sustains an impact. Receptors can include people, the environment or physical property.

For risk to be present there must be a hazard and the potential for exposure to the hazard. Hazard elimination is the only sure way to eliminate risk; however it is possible to reduce risk by minimizing the potential for exposure to the hazard or by containment of the hazard.

7.3 Accident Model

Understanding how incidents occur is critical to recognizing the importance of hazard identification and management. "Domino" (Heinrich, 1931) or "Swiss Cheese" (Reason, 1990) accident models are commonly used in the process industries to understand a sequence of failures (chain reaction) that cause an incident or near-miss to occur. This

simple type of accident model describes accidents as the result of a sequence of clearly distinguishable events that occur in a specific order.

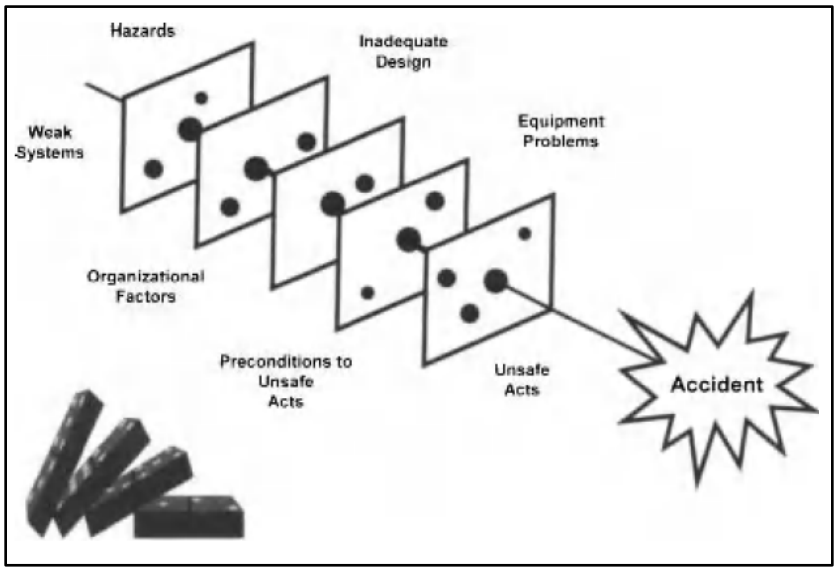

Figure 7-7-1 "Domino or Swiss Cheese" Accident Model

Physical and Process Hazards.

Physical hazards are visible and tangible. Exposure to physical hazards typically results in injuries that are a function of energy, area of contact, and duration of contact. Physical hazards are commonly associated with occupational safety hazards and include:

- Slips, trips and falls
- Electrical hazards
- Pinch-points

Process hazards are less tangible and can be more difficult to recognize than physical hazards. Process hazards generally have much more significant consequences if they are not mitigated. The potential consequences of process hazards are a function of the type of material involved, its quantity and the process conditions. Process incidents can cause the release of a toxic or flammable material, and may result in subsequent fire, explosion or exposure to toxics. Small process releases can escalate to cause significant injury, environmental impact, or equipment damage.

Process hazards can lead to the release of a toxic or flammable material, and subsequent fire, explosion or exposure to toxics. Small events can escalate to cause significant injury, environmental impact, or asset damage. Process hazards can lead to:

- Fires
- Explosions/implosions
- Uncontrolled chemical reactions
- Exposure to:
- Corrosive materials

- Toxic materials
- Ionizing and non-ionizing radiation
- Pathogens
- Temperature extremes

Some causes of process hazards may be easy to identify, such as:

- Equipment defects or degradation
- Corrosion/erosion
- Impact to piping and equipment
- Inadequate isolation of equipment or piping
- Inadequate energy isolation (lockout/tagout)

Other causes of process hazards are more difficult to detect:

- Design deficiencies
- Deviating from an operating procedure
- Inadequate training
- Operating equipment outside design parameters
- Incorrect MSDS sheets (lack of information can lead to chemical hazards related to chemical instability/reactivity, inadvertent mixing, etc.)
- Equipment not fit-for-service
- Fatigue
- Too many tasks for the current staffing level to perform safely
- Poor communication
- Between shifts
- Between equipment and people
- Non-routine operating activities, such as start-up or shutdown
- Test runs
- Feed composition changes
- Swings in ancillary systems, such as utility air, water, fuel gas, inerting gas, etc.

7.4 Job Hazard Analysis

Employee(s) should complete a Job Hazard Analysis (JHA) Form or something similar each day before starting work day. Each person working a particular job must be involved in the evaluation and problem solving process. Often individual job tasks are defined through the use of an overarching assembly plan. When complete, the JHA needs to be initialed by all persons working the job prior to work commencement.

The JHA form is designed to have a person or group of people, who are completing a job/task, to stop and think about the job they are about to perform, identify as many safety hazards as possible and form a plan to prevent those hazards from happening. This form should be completed daily, after the tailgate meeting and before work commences. Whenever work is stopped or if the job scope or conditions change during the course of the day, the JHA must be reviewed and changed as needed.

The following are brief descriptions of some of the information that could be placed on the form. This is just a tool to result in an operational pause and to incent a thought process about the hazards of the job and to prevent them from causing injury.

What am I about to do?

In this section describe the job. If you are going to set a compressor, engine, and coupling and grout the boxes, then that is what you would place in this space. If installing tubing for compressors and engine controls, similarly include this.

How am I going to do it? (Job/Task Sequence)

In this section give an overview of the steps that are required to perform the job. For example, place compressor on skid, place engine on skid, weld nozzle on vessel, weld flanges to pipe, install coupling, set cooler, align engine. Include major steps to be performed.

What tools do I need to do the job?

Self-explanatory.

How can I be injured?

For example, if you will be grinding, “flying debris” could be written. Flash burn for welders and their helpers. Pipe wrench slipping for screw pipe people. This list could be endless.

What are the work area conditions?

List the conditions of the work area. Indoors, Clean/Dirty, welding hoses across the floor causing a trip hazard, raining so there are puddles of water at the door, Test Run today so hearing protection will be required. Again, many items, write down the ones that are applicable. .

What am I or others going to do about the hazards? Describe your measures and check the controls you used.

Examples are using barricades, body positioning for awkward areas, tie off using body harnesses at elevated heights, LOTO when test running a unit, roll up extension cords and hoses when finished using them, sweep up debris after torching metal, etc.

Finally, have all people assigned to a particular task sign the bottom of the JHA. Once everyone becomes familiar with this form it should take approximately 5 minutes to complete. Again, this is a form that is designed to promote thought about the task and to try to come up with a plan to avoid injuries and accidents through planning. The completed JHA must be given to a Supervisor or Lead Man for review before the works starts to ensure each job was properly evaluated with potential hazards and corrective measures identified. Safety Observers will randomly review JHA’s in each Bay/Shop to evaluate and advise on improved or alternate methods, if any. JHA’s will be kept in the shop until the day is complete. Each day the Lead will collect the previous day’s forms and give them to the HSE Coordinator for review and filing.

	Person Completing this Form:	Customer:
	Location/Unit #	Date:
	Work Permit required? (hot work / confined space / other):	

I understand that I may *STOP* any job/task I believe is unsafe and I must report *ANY* injury on the job IMMEDIATELY.

What am I about to do?

How am I going to do it? (Job/Task Sequence)

What tools do I need to do the job?

How can I be injured? (What are the energy sources?)

What are the work area conditions?

What am I or others going to do about the hazards? Describe your measures and check the controls you used.

CONTROLS (Identify controls needed to eliminate/control hazards by checking appropriate boxes – List others as needed.)

Body Positioning	☐	Designate Parking	☐	Journey Management	☐	Spill kit / containment	☐
Body Stabilization/ 3 point contact	☐	Drink Fluids/Rest	☐	Lifting Devices	☐	Stabilize Equipment	☐
Buddy System	☐	Drip/Catch Pans	☐	Lifting Technique	☐	Stop the Job	☐
Capacities Known	☐	Environmental	☐	Lock-out/Tag-out	☐	Tools/Quality	☐
Clean/Dry Surfaces	☐	Equipment Cool Down	☐	MSDS	☐	Ventilation	☐
Contact "One Call"	☐	Fire Extinguisher	☐	PPE	☐	Others	
Contact Customer	☐	Fire Watch	☐	Protection/Barrier	☐		
Contact Exterran HSE	☐	Guarding	☐	Purge Process	☐		
Contact Exterran Manager	☐	Guide Lines	☐	Restrict Access	☐		
Contact I&E/Electrician	☐	Housekeeping	☐	Sampling/Monitoring	☐		
Depressurize Process	☐	Inspections	☐	Secure Equipment/Process	☐		

All personnel involved with the job must print and initial his or her name below. Place additional names on back.

	Print Name	Initials		Print Name
1			7	
2			8	
3			9	
4			10	
5			11	
6			12	

Figure 7-2 Job Hazard Analysis Form (JHA)

7.5 PERMIT TO WORK

7.6 Definitions

Permit to Work (PTW)

Authorization to safely execute work in a restricted area, part of a risk management process established to control non-routine work.

Potentially Hazardous / Non-Routine Activities

Activities performed in restricted areas which are outside the regular operations of the facility, or which are likely to cause injuries or ill health.

Restricted Area

All areas belonging to the following:

- The whole of the site area within the boundary fence of every well being drilled or work over, tank farm, flow station, gas compressor station, gas plant, water injection plant, oil terminal, pipeline manifold, or any other area that may be restricted by customer.
- All areas within 35 feet of any oil or gas wellhead including associated drilling and production facilities or other installations handling HCs whether or not such areas have been fenced off.
- Operational areas without boundary fences, such as pipeline right-of-ways and flow line traces, etc.;
- Electrical switch gear/transformer locations and electrical power line traces whether or not they are Company owned.
- All petrol / fuel stations or chemical storages.
- All areas around radioactive materials or radiation equipment. The extent of area depends on the strength of the radioactive source and shall be established and demarcated by the radiological crew.
- Any other area so designated by the responsible asset holder (e.g. certain parts of office buildings, workshop areas and storage areas).
- Confined space areas.

	Permit to Work
	Health, Safety and Environmental
	PERMIT TO WORK FORM
	Revision: 0 | Number: | RevisJanuary 17, 2015

1. Permit Applicant completes this section.

Work Permit:	Work Order:	Job Number:	Department/Area:
Permit Applicant:	Date:	Cell:	Location:
Permit Issuer:		Cell:	Shift Change ☐YES ☐NO | Time:
Other Contact person (if different from requester):		Cell:	Contractor: ☐YES ☐N/A
Permit Valid (date/time):		Estimated End of Permit (date/time):	
Description of Work:			

2. Permit Applicant: Complete this section and attach XFACTOR Job Hazard Analysis. Permit Issuer: Verify conditions meet intent of activity and controls.

HSE ANALYSIS				
Check all that apply	☐LOTO ☐ **Confined Space**	☐ **Hot Work**	☐ **Line Breaking**	☐ **Other**
Safety Concerns	☐ Crane/Critical Lift	☐ Excavation	☐ Hazardous Material	☐ Purging
☐ Asbestos	☐ De-mob/Mob	☐ Fire Watch	☐ Hydraulic	☐ Pressurized Systems
☐ Chemicals	☐ Electrical	☐ Flammable	☐ Line Breaking*	☐ Toxic Materials
☐ Confined Space*	☐ Elevated Work*	☐ Fumes/Mist/Dust*	☐ Material Handling	☐ Vacuum
☐ Corrosive	☐ Energy Isolation*	☐ Heat/Cold Stress	☐ Non-Ionizing Radiation	☐ Other
* Has appropriate person, customer or operations been contacted? ☐Yes ☐No				
Environmental Concerns	☐ Solid ☐ Liquid(s)	☐ Soil contamination	☐ Atmospheric Discharges	☐ Waste-Regulated
☐ Chemical Storage or Use	☐ Spill potential	☐ Liquid Discharges	☐ Waste-Mixed	☐ Other
Area Concerns	☐ None	☐ Potential to Cause a False Alarm		☐ Vibrations
☐ Access/Egress Limitations	☐ Electrical Noise	☐ Temperature Change	☐ Ventilation Systems	☐ Other
☐ Configuration Control	☐ Impacts Facility Use Agreement		☐ Operational Control Interruptions	
Safety System De-activation:	**None**	**Yes (list controls):**		

Confined Space Controls (in place and verified):				
Confined Space Identified? ☐Yes ☐No ☐N/A		**Confined Space Isolated?** ☐Yes ☐No ☐N/A - List method of isolation in controls section.		
Confined Space Level II Permit Completed / Attached? ☐Yes ☐No		**Level II Permit Posted?** ☐Yes ☐No ☐N/A	**Contractor Informed?** ☐Yes ☐N/A	
HOT WORK (Permit must be valid prior to starting job task.) Check applicable hot work activity below – and complete atmospheric testing as required.				
☐ **None**	☐ **Cutting/Welding**	☐ **Grinding**	☐ **Electrical Hot Work**	☐ **Confined Space Entry**
☐ **Concrete/Masonry Penetration**	☐ **Sparking Tools**	☐ **Other (list):**		
Controls: (applicable for hot work. Controls shall be in place and permit shall be valid prior to starting any activity.				
Equipment drained, cleared, and/or purged? ☐Yes ☐NO ☐N/A		☐ Blinding/Blanking	☐ Dropped valves	☐ Plugging (mud/other)
Purge Method: ☐ Inert Gas ☐ Wash ☐ Air ☐ Natural ☐ Forced		☐ Cooler Blades	☐ Mechanical LOTO	☐ Parting Lines
☐ Combustibles Cleared	☐ Flammables Cleared	☐ Double Block/Bleed	☐ Electrical LOTO	☐ Other
Personal Protective Equipment (PPE)				
☐ Hard Hat	☐ Gloves	☐ FRC/FRC Lab Coat	☐ Fall Protection	☐ Personal Gas Detection
☐ Safety Glasses / Goggles	☐ Face Shield	☐ Safety Shoes	☐ Safety Harness	☐ Fixed Gas Detection
☐ Ear Plugs / Muffs	☐ Disposable Clothing	☐ Respirator	☐ Other	☐ Other

Initial Atmospheric Testing		Periodic Atmospheric Testing (use back of form if more testing is required)							
O2	LEL	O2	LEL	O2	LEL	O2	LEL	O2	LEL
CO	H2S	CO	H2S	CO	H2S	CO	H2S	CO	H2S
Tested By:	Time:	Initials:	Time:	Initials:	Time:	Initials:	Time:	Initials:	Time:

3. Both Permit Holder and Permit Issuer contribute to work plan

Reviewed by: Permit Issuer shall determine the size of the review team and other signatures required based on hazards and job complexity. Permit Issuer signature means that the hazards and risks that could impact HSE have been identified and will be controlled according to Company requirements.

Title	Name (print)	Signature	Cell#	Date
Permit Applicant				
Permit Issuer				
Permit Holder				
HSE Professional (if required)				

4. Closeout: Permit Issuer (or authorized person) checks quality of completed permit -ensure the work site is left in an acceptable condition.

Name:	Signature:	Cell:	Date:
Comments (use back if required):			

Figure 7-3 Permit To Work Form

7.7 HAZOP (Hazard and Operability)

A HAZOP study is undertaken by the application of formal, systematic, and critical examination of the process and engineering intentions of the process design. The potential for hazards or operability problems are thus assessed, and malfunction of individual items of equipment and associated consequences for the whole system are identified. This examination of the design is structured around a specific set of parameters, which ensures complete coverage of all major likely problems. The review meeting follows a structured format. The complete process to be studied is divided into discrete nodes or areas. After considering existing protection measures, a recommendation for action would be made, if the remaining level of risk is considered unacceptable. Clarifying remarks are included as appropriate.

The HAZOP has the following primary goals:

- To identify the causes of all deviations or changes from the design intent;
- To determine all major HAZOP problems associated with these deviations;
- To decide whether action is required to control the hazard or the operability problem;
- To ensure that the actions decided upon are implemented and documented.
- To determine the consequences associated with these threats;
- To decide whether action is required to prevent or mitigate potential threats;
- To ensure that the actions decided upon are implemented and documented.

Review Procedure

All of the reviews follow a structured format. The sequence of steps used to conduct the review is as follows:

- Define the assumptions about the facility to be accepted during the review process.
- Facility Documentation for pipeline and facility projects
- The documentation should be accurate and up-to-date, i.e., all the changes that have occurred at the facility have to be incorporated into the reference drawings including field changes. P & IDs that are “as-built” verified for the existing processing facilities
- Plot plans or equipment and main piping layout and pertinent elevation drawings, including surface drainage arrangements
- Cause and effects charts (SAFE charts) with schedule of alarm and trip settings
- P & IDs for vendor packages
- System design philosophy and process description*
- Fire and explosion protection system drawings or arrangements (fire and gas detection/alarm, protection—passive and active)
- Chemical and physical properties of commodities involved, especially hazardous materials (including but not limited to crude oil GOR, and MSDS
- Emergency response plans (ERP) indicating responsibilities and duties of management
    - Operating procedures (including start-up or shutdown and emergency) and maintenance schedules**
    - PFDs and material and energy balances
    - Electrical hazardous area diagrams
    - Full description and system design calculations of ESD isolation and depressing (blowdown) capabilities including headers, vents, and flares

- Design duties and basis of calculation of all relief valves, rupture disks, and so on
- Corrosion monitoring and prevention systems
- Engineering design data sheets for all plant items including vendor items
- Data sheets for instruments and control valves
- Piping and material specifications (if not indicated elsewhere)
- Flare, vent, and drainage header diagrams
- Electrical single line diagrams
- Instrumentation philosophy (e.g., local and remote control, hardwired and data highway, failure mode(s), analog/digital, and emergency alarms)
- Drawings showing interfaces to existing systems
- Special studies or calculations (e.g., vapor dispersions and blast over pressure)
- Environmental ambient data (e.g., temperature, weather, and seismic)
- Utilities specifications and reliability (e.g., power, water, and sewer).
- Design codes and standards employed (e.g., API, NFPA, ANSI, ASME, International Society of Automation, and NACE)
- Manning levels, distribution of personnel, levels of supervision, and evacuation routes or plans
- Define the boundaries and operational mode(s) of the facility under review.
- Select and confirm the scope of a node.
- Explain the general design intentions and operating conditions of the node.
- Specify the node's process parameters.
- Select a process parameter (flow, pressure, and so on) and specify the design intention relating to this parameter.
- Apply a deviation to the parameter and develop a meaningful scenario (causes/hazards).
- Identify all scenarios (causes or hazards) of the deviation.
- Identify all major consequences associated with each cause without regard to safeguards.
- Specify predominant safeguards against each consequence.
- Determine the probability and severity of each consequence, and document if desired (for determining probability and severity levels.
- Make recommendations to mitigate the consequences if the severity and/or probability are unacceptable, according to the companies' risk acceptance levels.
- The review team should rank all the produced recommendations in priority of assigned risk for schedule of implementation. Ranking of recommendations assists senior management in allocating resources.
- Prepare summary and listing of recommendations in order of priority (ranking).

Graphically, the steps can be represented by the following arrangement:

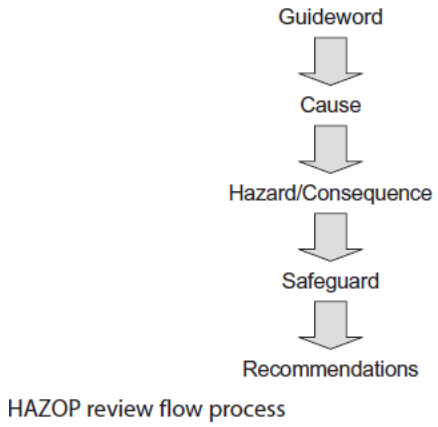

Figure 7-4 Hazop Review Flow Process

Global deviations should sometimes be considered in a HAZOP review. Global deviations are generally considered as the effects that would simultaneously affect the entire process or facility. These are, but are not limited to, equipment layout, seismic activity, flooding, sandstorm/ extreme weather conditions, loss of power, human factors, and so on.

CREDIBLE SCENARIOS AND CAUSES

The objective of performing a review is to identify and develop credible process upset or security scenarios which could adversely impact safety, health, environment, quality, productivity, or public perception of the company. Multitude events both common (line rupture) and very far-fetched (meteor striking facility) could be identified. The aim is to identify events that have a very real possibility of occurring at the facility. Although all such far-fetched events may be listed, it is generally not practical or necessary to do so.

POSSIBLE CAUSES

The possible causes for Process Hazard Analyses can be categorized by the following:

- Equipment failures (e.g., spurious valve operation, pressure regulator failure, software bugs, leakage, ruptures, excessive wear, wrong material of construction, and material defect)
- Operational errors (e.g., opening or closing wrong valve, valve left open or closed, and bad mounting)
- External events (e.g., fire in the area, external corrosion, dropped objects, and utility failure)
- Product deviations (e.g., change in, pressure, sand production, and nonconforming products).

SAFEGUARDS

Human observation is usually considered as the primary safeguards for any facility, either physically at the plant or from instrumentation in a control room. API Recommended Practice (RP) 14C provides typical process hardware safeguards (instrumentation, alarms, and shutdowns) usually employed in the petroleum and chemical industries. Security prevention usually involves layered protective measures to make it more difficult for an event to occur and be successful. They can be generally categorized as follows:

- Background checks and IDs: employee, vendors, and visitors

- Layered barriers: entrances, gates, and fencing, including utility entrances and exits
- Manned security surveillance (onsite and offsite)
- Vehicle access (automotive, train, aircraft): control and search
- Surveillance and alarms (CCTV, sensors, communications, lighting, and so on)
- Hardening of buildings and structures (blast resistance, windowless, and so on)
- Inventory obscuration, relocation, or reduction
- Portable property control (IDs, vaults, safes, audits, accountability)
- Document control (controlled files, classification, and so on)
- Software integrity (firewalls, encryption, and so on)
- Vital personnel protection (executives and directors)

LIKELIHOOD (PROBABILITIES)

Should be relevant to the loss history of the facility itself.

CONSEQUENCES

Since it is not fully known whether a consequence would occur, most consequences are written to state “possible” or “potential” prior to the action of the consequence itself.

NOTETAKING

Except for the scribe, no team member is expected to make notes during the review. Their obligation is to primarily discuss the unusual circumstances the design or facility may be subjected to. A team member may desire to take some personal notes during the discussion, which is allowable. The scribe should transcribe all the “official” discussions onto the worksheet as directed by the team leader. No other team member should direct the scribe. When other team members are allowed to direct the scribe, confusion and misdirection may arise thus resulting in loss of valuable time for review.

Worksheet

For a typical HAZOP worksheet, the columns are identified by the following titles and a description of the contents is given:

- GW: Simple word or phrase used to generate deviations by application on a system or process activities (e.g., pressure, level, temp, and so on).
- Deviation: A departure from the design and operating intention (e.g., high, low, more, less, and so on).
- Causes: Reasons those deviations occur (failures, wrong operation, and so on).
- Consequences: The effects of a deviation resulting from various causes (fire, explosion, process upset, and so on).
- Safeguards: Measures taken to prevent or mitigate the risk of accidents (operator surveillance, instrumentation, ESD, blowdown, and so on).
- Severity: The magnitude of physical or intangible loss consequences (qualitative measure of consequences compared to industry experience).
- Likelihood: A measure of the expected frequency of an event’s occurrence (qualitative measure of probability based on historical data or theoretical estimate).

- Ranking: The qualitative estimation of risk from severity to likelihood levels, in order to provide a prioritization of risks based on its magnitude (refer to corporate risk matrix for ranking based on severity and likelihood levels).
- Recommendations: Activities identified which may reduce a risk through the lowering of a probability or consequence levels (suggested safety improvement to a process to reduce risk level).
- Comments: Technical notes of the facility, system, or process under study (supplemental information about the issue being discussed), if necessary.

7.8 Operational Risk Management

DEFINITIONS

ALARA

An acronym for 'As Low As Reasonably Achievable'. The ALARA concept is related to balancing the assumed risks of exposure against the benefit of performing the work. Management balances the cost of control measures in terms of time, inconvenience, and money against the work's risk level. The goal of the ALARA process is to identify, from among several candidate alternative protection systems, the system that would result in minimal overall cost and provide maximum risk reduction benefit.

Hazard

Any condition with the potential to cause harm, ill health, injury, damage to property, plant, products, reputation, shareholder value, environmental damage, production losses or increased liabilities.

Likelihood

A measure of frequency for an undesired event occurring. It is derived from a combination of frequency of the activity, level of exposure, and the probability that the sequence of events will lead to an undesired event. The likelihood of an undesired event occurring shall take in account the existing passive and active safeguards of the system.

Risk

The product between the likelihood of occurrence of an undesired event and the potential severity of the consequences. Risk is measured a 5x5 risk matrix with risk scores between 1 (lowest risk) and 25 (highest risk). Risk scores are translated into the risk levels negligible, acceptable, undesirable and intolerable. These levels provide an indication of what actions need to be taken in order to proceed.

Risk Level

A qualitative measure of risk as plotted on the risk matrix and identified by colored zones, each with different decision-making requirements.

Risk Management

The set of ongoing management and engineering activities that ensure risks are effectively identified, understood, and minimized to a reasonably achievable or tolerable level.

Risk Matrix

A two-dimensional 5x5 matrix used is to determine the risk level of an unwanted event or scenario by plotting likelihood on the X-axis (horizontal) and severity on the Y-axis (vertical).

Severity

The degree of health and safety, financial, environmental and quality consequences arising from an undesired event with planned prevention and mitigation measures in place. It is the maximum credible worst-case level of harm expected from the incident. The severity of an undesired consequence shall take in account the existing passive safeguards of the system.

Management

For the purpose of this procedure, management refers to those managers who have geographical responsibilities. Typically, management refers to the range of managers from local management up to regional vice presidents

RESPONSIBILITIES

Management is responsible for implementing, supporting and enforcing regulations suggested by HSE Professionals

Senior Manager Global Manufacturing HSE

The Senior Manager of Global Manufacturing HSE is responsible for reviewing this procedure at a minimum of every two years.

REQUIREMENTS

General

Local management shall be aware of the requirements of this procedure and be involved to ensure all issues are properly addressed. If potential risks are identified “up the line” by regional management and communicated to the local level, local managers shall ensure all requirements and concerns of this procedure are addressed. Similarly, if risks are identified at a local level, local management shall utilize this procedure and communicate all determinations to regional management.

Risk Matrix

The following standard terms and categories shall be used to describe the severity of consequences arising from a postulated scenario, an incident or near miss:

Table 7-1: Risk Matrix

Category	Health, Safety, Environment, IT Security	Vehicle	Customer / Public / Shareholder/ Employee Relations	COMPANY Property / Earnings / Production Delays/ Marketing / Legal Compliance	Product / Service Quality
1 MINOR LOSS <$10K	Medical case or First Aid and, return to normal duties by next shift Recordable with no lost time or restricted duty Asset Loss/HSE Fines Minor Environmental Loss or Remediation Costs Short-term environmental impact Notice of Violation <$10K Minor data loss, theft, system outage	Total Loss <$10 K Any minor incident not falling into another category Third party involved and COMPANY not responsible	Disgruntled Customer Negative Local press Disgruntled Employee Minor loss of shareholder confidence	Financial impact to the COMPANY of <$10K arising from loss of earnings, production delays, contractual violations, fines. Minor loss of market share	Minor service or product quality loss requiring retrofit, rework, and/or liquidated damages due to disruption of client process.
2 MODERATE LOSS > $10K to <$100K LWDC or RWDC >1 to <100 days	Temporary disabling injury Recordable with greater than 1 but less than 100 days of lost work or restricted duty Asset Loss/HSE Fines Moderate Environmental Loss or Remediation Costs Short to Medium term environmental impact Notice of Violation $10K - <100K Moderate data loss, theft, system outage	Total Loss > $10K to <$100K Third party involved and COMPANY responsible	Loss of an existing contract Negative State press Acrimonious workplace Moderate loss of shareholder confidence	Financial impact to the COMPANY of > $10K to <$100K arising from loss of earnings, production delays, contractual violations, fines. Moderate loss of market share	Moderate service or product quality loss requiring retrofit, rework, and/or liquidated damages due to disruption of client process.

Category	Health, Safety, Environment, IT Security	Vehicle	Customer / Public / Shareholder/ Employee Relations	COMPANY Property / Earnings / Production Delays/ Marketing / Legal Compliance	Product / Service Quality
3 SERIOUS LOSS > $100K to <$1M LWDC or RWDC > 100 days	Recordable more than 100 lost or restricted workdays Asset Loss/HSE Fines Serious Environmental Loss or Remediation Costs Medium term environmental impact Notice of violation $100K-1M Serious data loss, theft, system outage	Any rollover involving any vehicle Total Loss > $100K to <$1M	Loss of a regional customer Negative National press Inability to attract key people Serious loss of shareholder confidence	Financial impact to the COMPANY of > $100K to <$1M arising from loss of earnings, production delays, contractual violations, fines. Violation of local laws Serious loss of market share	Serious service or product quality loss requiring retrofit, rework, and/or liquidated damages due to disruption of client process.
4 MAJOR LOSS >$1M to < $10M Fatality Permanent Disability	Single fatality or permanent disability involving any party Asset Loss/HSE Fines Major Environmental Loss or Remediation Costs Long-term environmental impact Significant intervention by a legislative/ regulatory body Major data loss, theft, system outage	Any automotive incident involving loss of a life Total Loss>$1M to < $10M	Loss of a major customer Negative International press Loss of a key employee Major loss of shareholder confidence	Financial impact to the COMPANY of >$1M to < $10M arising from loss of earnings, production delays, contractual violations, fines. FCPA/Class Action Major loss of market share	Major service or product quality loss requiring retrofit, rework, and/or liquidated damages due to disruption of client process.

Category	Health, Safety, Environment, IT Security	Vehicle	Customer / Public / Shareholder/ Employee Relations	COMPANY Property / Earnings / Production Delays/ Marketing / Legal Compliance	Product / Service Quality
5 CATASTROpHIC LOSS >$10M Multiple Fatalities	Multiple fatalities involving any party Asset Loss/ HSE Fines Catastrophic Environmental Loss or Remediation Costs Extensive long-term environmental impact, Significant intervention by multiple legislative/ regulatory bodies Catastrophic data loss, theft, system outage	Any automotive incident involving loss of multiple lives Total Loss > $10M	Loss of a global customer Negative global press Loss of several key employees Catastrophic loss of shareholder confidence	Financial impact to the COMPANY of more than $10M arising from loss of earnings, production delays, contractual violations, fines. SEC Violation Catastrophic loss of market share	Catastrophic service or product quality loss requiring retrofit, rework, and/or liquidated damages due to disruption of client process.

The final severity ranking for a scenario/incident/near miss involving several types of consequences shall be the highest severity ranking for any of the different consequence types arising from the event.

The following standard terms shall be used to describe the likelihood of an undesired event arising from a postulated scenario, an incident or near miss.

Table 7-2 Likelihood of an Unfavorable Event

Category	Description	Interpretation
Improbable	Practically Impossible	Cannot imagine this happening in the COMPANY or this industry in general. Very good passive and active safeguards in place and a full range of administrative controls.
Unlikely	Not likely to occur	This is not likely to occur in the COMPANY or this industry in general. Have not heard of this happening before in this industry.
Possible	Could occur or heard of it happening elsewhere	This can happen. Or have heard of it happening in this Industry but not in the COMPANY.
Likely	Known to occur or has happened to us	This has happened to the COMPANY before and it may have happened in this location.

The following standard terms and color coding system shall be used to describe the risk levels of a postulated scenario, an incident or near miss based on the combination of likelihood and severity.

Table 7-3 Risk Level Severity

Color	Risk Level (1-25)	Risk Level Name	Action to be taken
Red Zone	(10-25)	Intolerable	This risk is considered to be intolerable and operation shall not continue until control measures are added, the system/operation is modified, or the equipment/process redesigned such that the residual risk after these improvements are implemented is in the acceptable range.
Yellow Zone	(5-9)	Undesirable	This risk is considered to be undesirable and generally, work shall not be conducted unless it can be shown that the costs to further reduce risks far outweigh the benefits gained by implementing further risk reduction.
Green Zone	(2-4)	Acceptable	This risk is considered acceptable and the work or operation can proceed carefully. Opportunities for further risk mitigation should be considered as the operations are being performed.
Blue Zone	(1)	Negligible	This risk is considered negligible and the work can proceed

Every location shall adopt risk management as part of their management processes. The steps necessary to ensure a complete risk management are as follows:

- communicate and consult
- establish the context
- risk identification
- risk analysis
- risk evaluation
- risk reduction
- risk monitoring and review

7.9 Heat Tracing

A discussion of best practices for gas plant operations would not be complete without covering the basics of heat tracing. This is a concept that will be very important to gas plant operations in Afghanistan where a wide variation in ambient temperatures throughout the year are observed. The term heat-tracing refers to the continuous or intermittent application of heat to a pipeline or vessel in order to replace heat loss to ambient. The major uses of heat-tracing include freeze protection, thawing, maintenance of fluids at process temperature (or at pumping viscosities), prevention of fluid component separation, and prevention of gas condensation.

Some examples of when to use heat-tracing are: freeze protection of piped water; transfer of molten process chemicals such as phosphoric acid, sulfur, and p-xylene; low-viscosity maintenance of pumped fluids including petroleum products; avoidance of condensation and subsequent improper burning of fuel gas in refineries; preventing moisture from condensing out of piped natural gas; preventing freezing of control valves and compressor damage; elimination of pipeline corrosion due to wet H_2S resulting from condensed moisture.

In cases where flow is intermittent, tracing might be avoided by designing a self-draining system such as those used for steam condensate returns. Pipes may also be cleared after use by means of compressed air, steam, or solvent flushing or "pigging." The self-draining method is suitable only for infrequently used pipes due to the high labor costs involved in cleaning and the potential cost and scope of repair, should a pipe not empty properly.

A third approach in the avoidance of tracing is to design for 100 percent flow. This practice is not recommended since equipment breakdown or process interruption may result in an irreversible drop in the temperature of the piped fluid.

Types Of Heat-Tracing Systems

Heat-tracing systems can be divided into two broad classes, electric and fluid. Fluid heat-tracing systems utilize heating media at elevated temperatures to transfer heat to a pipeline. The fluid is usually contained in a tube or a small pipe attached to the pipe being traced. If steam is the tracing fluid, the condensate is either returned to the boiler or dumped. If an organic heat-transfer fluid is employed, it is returned to a heat exchanger for reheating and recirculation. In general, heating of tracing fluids can be provided by waste heat from a process stream, burning of fossil fuels, steam, or electricity.

Electric heat-tracing systems convert electric power to heat and transfer it to the pipe and its contained fluid. The majority of commercial electric heat-tracing systems in use today are of the resistive type and take the form of cables placed on the pipe. When current flows through the resistive elements, heat is produced in proportion to the square of the current and the resistance of the elements to current flow. Other specialized electric tracing systems make use of impedance, induction, and skin conduction effects to generate and transfer heat.

7.10 Lockout/Tag out Procedures

Another fundamental process in safely operating and maintaining a NGPP which must be understood is the procedures associated with lockout/tag out. This is a process that ensures the safety of the operators when bringing all or a portion of the facilities down for maintenance and returning it to service.

Definitions

Affected Employee: An individual whose job requires him/her to operate or use a machine or equipment on which servicing or maintenance is being performed under lockout or tag out, or whose job requires him/her to work in an area in which such servicing or maintenance is being performed.

Authorized Company Representative: An assigned individual who received specific training and understands the specific procedures for removal of lockout / tag out devices when the authorized employee is not available.

Authorized Employee: A qualified person who physically locks out or tags out machines or equipment in order to perform servicing or maintenance activities.

Capable of Being "locked out": Machine or equipment that has a hasp or other means of attaching a lock or has a locking mechanism built into it.

Energized: Connected to an energy source or containing residual or stored energy.

Energy Isolating Device: A mechanical device that physically prevents the transmission or release of energy, including but not limited to the following:

- Manually operated electrical circuit breakers
- Disconnect switches
- Manually operated switches by which the conductors of a circuit can be disconnected from all ungrounded supply conductors and, in addition, no pole can be operated independently
- Block valves
- Any similar device used to block or isolate energy

Energy Source: Any source of electrical, mechanical, hydraulic, pneumatic, chemical, thermal or other energy. This includes stored or residual energy, such as capacitors, springs, elevated machine members, rotating fly wheels, hydraulic systems, and air, gas, steam or water pressure, etc.

Gangbox: Box that holds the individual lock keys of all employees involved in the machine / equipment service or maintenance activities.

Lockout: Placement of a lockout device on an energy isolating device, in accordance with an established procedure, ensuring that the energy isolating device and the equipment being controlled cannot be operated until the lockout device is removed.

Lockout Device: Device that utilizes a positive means such as a lock to hold an energy isolating device in the safe position and prevent the energizing of a machine or equipment. Examples are blind flanges and bolted slip blinds.

Servicing or Maintenance: Workplace activities such as constructing, installing, setting up, adjusting, inspecting, modifying, and maintaining and/or servicing machines or equipment. These activities include lubrication, cleaning or unjamming of machines or equipment and making adjustments or tool changes, where the individual may be exposed to the unexpected energizing or starting up of the equipment or release of hazardous energy.

Tag out: The placement of a tag out device on an energy isolating device, in accordance with an established procedure, to indicate that the energy isolating device and the equipment being controlled may not be operated until the tag out device is removed.

Tag out Device: A prominent warning device, such as a tag and a means of attachment, which can be securely fastened to an energy isolating device in accordance with an established procedure, to indicate that the energy isolating device and the equipment being controlled may not be operated until the tag out device is removed.

Responsibilities

Management is responsible for implementing, supporting and enforcing the requirements of the tag out procedure in their locations. Local HSE coordinators are responsible for assisting management in the implementation of this procedure.

7.11 Requirements

General

All equipment shall be completely isolated to a zero energy state prior to any type of service or maintenance activity. Service or maintenance activities include, but are not limited to:

- Unbolting any flanges
- Removal of any threaded valve or connection from main gas piping
- Blow down of main gas or fuel gas piping
- Purge and repressuring of main gas, fuel gas or instrumentation piping
- Torch or mechanical cuts on pressure piping
- Removing equipment guards
- Opening of engine and/or other components for servicing
- Opening of piping systems for servicing
- Opening of vessels/tanks for servicing
- Working on couplings or other rotating devices
- Servicing electrical systems
- Accessing coolers
- Changing filters in pressure piping systems

Equipment Specific Procedures

Shop manager/supervisor is responsible for developing specific step-by-step isolation procedure for shutdown and startup for a particular machine or piece of equipment in their respective area. This procedure shall include:

- Equipment number if assigned;
- Equipment location at that time;
- Shutdown and start up procedure;
- Energy Source(s) (i.e. electrical, hydraulic, gas pressure, etc.);
- Location of isolating controls (i.e. breaker switches, valves, etc.);
- Quantity of isolating controls;
- Quantity of locks required to isolate the equipment;
- Other hardware required to isolate the equipment (i.e. chains, valve covers, blocks, etc.);
- List any residual energy required to be dissipated before work begins.

NOTE: any time that equipment is moved to another location Management is responsible to update site specific conditions.

Energy Isolation Kits

3" x 5" laminated tags stating "DO NOT OPERATE" or similar statements shall be part of the tag out kit and should provide enough space for the identification of the authorized employee, date and reason for the lockout.

Training

Authorized employees shall receive training in the recognition of applicable hazardous energy sources, the type and magnitude of the energy available in the workplace, and the methods and means necessary for energy isolation and control of each system / equipment they will be isolating. Authorized employees shall go through a "hands on"

session to demonstrate competency in performing the Lockout/Tag out procedure. Refresher training shall be provided to authorized employees whenever there is a change in their job assignments, a change in machines, equipment or processes that present a new hazard, when there is a change in the procedures or audit findings requirements.

Notification

Authorized employee shall notify all other affected employees prior to the application and removal of lockout/tag out devices. When working on a customer location, authorized employees shall notify the affected customer / contractor employees on site prior to the application and removal of lockout/tag out devices.

Applying LOTO

If a system / equipment to be serviced or maintained was locked out / tagged out by a customer and or contractor, the authorized employee shall also apply their lockout/tag out procedure. NOTE: DO not assume that customer / contractor isolation is adequate.

All lockout devices shall be physically located in such a manner as to isolate the system or machine from the energy source. Lockout devices shall be affixed in a manner to maintain the energy isolating devices in a “safe” or “off” position. Tags shall be securely affixed to lockout devices to prevent the tag from falling off or being easily removed. All tags shall be filled out in permanent ink. Grease pencils are not acceptable for filling out tags. In order to re-use a tag, “LOTO” shall be placed on the tag where the reason, date, time, and person locking the equipment are provided by the tag manufacturer. Following application of the lockout device, all potentially hazardous stored or residual energy shall be relieved, disconnected, restrained and rendered safe. After applying lockout/tag out and prior to starting work, the authorized employee shall verify that isolation and deenergization of the machine or equipment has been accomplished.

Steps for Energy Isolation on Field Equipment

A sample Specific Equipment Isolation Log is depicted in Error! Reference source not found.5 and it must be signed when completed by the Responsible Person. The following are the steps necessary for isolation of field equipment prior to maintenance or other action:

- Complete Job Hazard Analysis and identify all hazards of specific job. If new hazards are identified during job, stop job and inform all people of the hazard(s) and document on the Job Hazard Analysis.
- Notify all “affected employees” of the equipment being taken out of service. This involves informing people working nearby on location, customers that may be affected, and others that will be affected by the equipment being taken out of service and/or the job that will take place.
- Call Customer or Gas Control if required.
- Isolate all energy sources on equipment. The Specific Equipment form includes a list of energy sources which should be listed as they are isolated.
- Install locks and LOTO tags on isolation points. Not all isolation points require the locks, but all require the LOTO tag with responsible person’s name and phone number on them. Isolation points that require a lock include the following:
    - Suction
    - Discharge
    - Fuel Gas
    - Start Gas

- Batteries
- Scrubber dumps
- Blow down (open)
- By-Pass (open), if piping is contained on skid, (closed) if piping is off skid
- Instrument Gas
- Electrical
- Compressed Air
- Recycle Valve (open) if piping is on skid, (closed) if piping is off skid
- Side Stream Equipment (if applicable)
- Release all stored residual energy from equipment. This includes activating the start button/switch/valve, bleeding off gas pressure, releasing stored liquids, etc. to ensure the energy has been released.
- Insert keys to the isolation point locks into the lock box and close lid to lock box.
- Responsible Person places their personal lock with their name on it onto the lock box hasp and places key in their pocket. The responsible person must be on site for the entire job.
- Each "authorized employee" working on equipment places their personal lock with their name on it onto the top of the lock box and places the key in their pocket. If any of the "authorized employees" must leave the job, they must gather up all tools and be finished with job before removing their personal lock.

Release from LOTO:

When servicing or maintenance is completed or equipment requires testing the following steps shall be taken:

- Check the machine or system and its immediate area to ensure that all nonessential items have been removed and that the machine or equipment components are operationally intact.
- Replace any guards and safety devices that may have been removed or tripped.
- Check the work area to ensure that all personnel have been safely positioned or removed from the area.
- Verify that all controls are in the correct position for startup (if applicable).
- Each authorized employee shall remove their locks and ensure all lockout devices were removed.
- Retain the completed isolation log, if applicable and provide to supervisor for filing.
- When equipment/system is ready to be placed into service, the following steps shall be followed:
    - Walk around equipment/ system to ensure the servicing is complete and it's ready to operate.
    - Inform all Affected Employees that the equipment coming back on line.
    - Authorized Employees remove their personal locks from lock box (comp. equip).
    - Responsible Person removes his or her personal lock from the lock box (comp. equip).
    - Responsible Person removes locks and tags from isolating points (field and shop).
    - Follow energizing procedures - purge equipment if applicable.
    - Check equipment for leaks and/or proper operations.

Removal of Locks

When the authorized employee is not in the premises or available to remove the lock, the authorized company representative may remove the lock following the requirements below:

- Every effort shall be made to contact the authorized employee who applied the lock to obtain the key(s) and to ensure that the employee is not injured on equipment;
- If the authorized employee can be contacted, ensure that he or she knows that the LOTO device will be removed and make a feasible effort for the employee to remove it themselves. Explain to employee the reason for LOTO device removal
- If the key(s) cannot be made available, the employee who requests removal of the lock shall contact their supervisor;
- The supervisor shall verify that every effort was made to contact the original authorized employee who applied the lock and to obtain the key(s);
- The authorized company representative removing the lock shall note on the Service Report that the lock(s) were removed with permission by supervisor;
- The authorized employee shall be notified by the authorized company representative that their locks have been removed, ensuring that the authorized employee has this knowledge before they return to work;
- If the equipment is also locked out / tagged out by the customer, the authorized company representative requesting to remove the lock(s) shall contact the customer to get the lock(s) removed.

Equipment with Electrical Drive

When equipment requiring lock out/tag out utilizes electrical drive, the following procedures shall be followed:

- All power sources shall be locked and tagged out before work commences
- Any equipment greater than 50 volts shall be serviced by a qualified or licensed electrician in accordance with state or local regulations
- Employees shall stand to the side of the panel to (reduce potential for energy due to arc flash) throw a disconnect switch in an on or off position only if the panel door is closed and remains closed for the duration of the maintenance. Employees who service the equipment shall be properly trained and shall be qualified for the work performed.
- Throwing a disconnect switch shall only be used to lock or tag out equipment or to put the equipment into service.
- Employees shall have proper fire retardant clothing (FRC), PPE, and tools when throwing the disconnect switch.
- Employees shall not service a panel over 50 volts unless they are qualified or licensed to do so.
- Employees shall verify the grounding rod prior to commencing their work.
- General HSE Requirements procedure shall be referenced for information regarding combustible gas, combustible gas equipment, and safe work zones.

Cord and Plug Connected Electrical Equipment.

Lockout will not be required for cord and plug connected electrical equipment when the following requirements are met:

- The equipment can be totally isolated from its energy source by unplugging the supply cord.
- The employee performing the servicing or maintenance on the equipment maintains exclusive control over the plug by keeping the end within arm's reach or within the line of vision.

Shift or Personnel Changes

In the event shift or personnel changes occur during maintenance and/or repair activities, the authorized employee in charge shall take the necessary steps to maintain the continuity of the lockout/tag out protection and replacement of lockout/tag out devices between authorized employees.

If the equipment must be isolated for more than 1 day or left overnight, the following must occur.

For equipment/ system that is intact and does not pose a safety threat:

The individual or work crew leaving the equipment down and isolated shall remove their LOTO locks, but ensure all isolation points remain secure and isolated. Instead of placing locks on isolation points, the individual or work crew shall ensure "do not operate" tags remain on each isolation point. The LOTO tags must clearly identify a contact person for information on equipment.

When an employee or crew arrives back on site to work on equipment, locks shall be reinstalled on energy sources that require a lock. All energy sources shall be re-verified for proper isolation and verify energy has been released before attempting to work on equipment.

For equipment/system that is not intact and may pose a safety threat:

The individual or work crew leaving the equipment / system down and isolated shall either use a site assigned LOTO system to ensure all isolation points are locked and tagged or contact the operator assigned to the location to attach their LOTO system on equipment before the individual or work crew leaving the equipment down can leave the location.

Once another crew is on site and needs to work on the equipment, the LOTO ownership now transfers to the new work crew's "responsible person". Keys to unlock the previous LOTO process shall be obtained from the previous individual or work crew involved with job (if site assigned LOTO system was used) or the assigned site operator (if using their assigned LOTO system).

All energy sources need to be re-verified for proper isolation and verify energy has been released before attempting to work on equipment.

Annual Audits

Because the lock out/tag out process is so critical to safe operations and maintenance, it is recommended that the manager/supervisor, or his/her representative, perform an annual inspection of the Lockout Program in their respective areas to verify the effectiveness of the program. Error! Reference source not found. provides an example of the type of language used to record completion of an audit. A form bearing this language is typically signed and filed to verify the completion. Further, it is good practice that the manager/supervisor or his/her representative verifies the following:

- Each authorized and/or affected employee has been trained as required;
- Any new equipment added has specific lockout procedures developed and documented;
- Current procedures are adequate for performing complete isolation of equipment and resulting in a zero energy state;
- The annual audit will be certified in writing and a copy of the audit maintained on file at the manager's/supervisor's office.

- Any deficiency detected during the annual audit shall be immediately corrected

Energy or hazard:	*(Circle all that apply)* Chemical Electrical Fuel Pneumatic Gravitational Hydraulic Mechanical Pressure Stored Energy Thermal Suction Discharge Fuel Gas Start Gas Batteries Scrubber dumps Blow down (open) By-Pass (open) Instrument Gas Electrical Compressed Air Other *(list)*
Date of Isolation:	____/____/_____
Description of Work:	
List of Equipment out of Service:	
Necessary Requirements of Clear Isolation:	
I certify that an audit of Control of Hazardous Energy Program was conducted and that each employee has been trained in the recognition and procedures to lockout equipment they may be required to work on or may be affected by. I further acknowledge that the current procedure is adequate to safely lockout equipment in this department for servicing and maintenance.	
Authorized Employee:	
Signature:	
Person Continuing Work:	
Signature:	

Figure 7-7-5 Sample Audit Form

8. Spare Parts Management of an Operating NGPP

8.1 General

For a NGPP that operates on a continuous basis 24 hours per day seven days a week, the management of spare parts is extremely important. Without spare parts, the NGPP will eventually shut down, gas will be flared, and revenue to the OPCO will be lost. Spare Parts is defined as any part or piece of equipment or consumable that is required to keep a NGPP operating in good working order. Therefore, Spare Parts Management is an integral part of the overall Maintenance Program for the NGPP and directly affects the reliability and operability of the NGPP. In fact, without spare parts management, there can be no maintenance program. Effective spare parts management minimizes the time for the maintenance department to perform or execute a maintenance repair and thus minimizes any loss in revenue to the NGPP.

8.2 Stages of the Life Cycle of Spare Parts Management

There are several stages of the life cycle of spare parts management.

- Spare Parts Demand and Replenishment Planning: An operating NGPP normally forecasts spare part demand by vendor recommendations, by location to vendor stock, by inventory stocking hierarchy and by time period based on historical consumption patterns. Parts can also be stocked based on condition based monitoring and probabilistic models. Planning for spare parts replenishment can be based on several factors:
    - Purchase order (PO) parameters like lead time or order lot size
    - Forecasted consumption of consumables like TEG, MDEA, salt, oils, etc.
    - Routine replacement schedule as in the case of routine periodic changes for items such as filters, seals and bearings
    - Consumption history as in the case of breakdowns
    - Condition monitoring preventive activities
    - Equipment life cycle based and substitution rules
    - Safety stock requirements from statistical safety stock or rule based safety stock
    - Possible sources of supply, either original equipment supplier spare or indigenous/local supplier.
- Spare Parts Procurement Management: Spare Parts Procurement Management is the portion of spare parts management that starts once the demand forecast is complete. Procurement management encompasses the entire procurement process: purchasing department, PO documentation, vendor management, vendor payment, vendor development, vendor rating processes, finance, budget control, logistics, transportation, and shipping to get the actual spare parts from the manufacturer to the NGPP site for use by the maintenance organization.
- One of the decisions that operating companies have to make up front is whether procurement is considered part of their corporate OPCO materials management team function or if it is handled separately by a local procurement team. No matter how the procurement management team is organized, it is critical that there is outstanding communication flow between purchasing and the team handling inbound and internal logistics. Choosing the right strategy and tactics for this portion of procurement management depends largely on the OPCO resources and the gas service industry locations.

Within an OPCO, procurement principles should be defined and should cover the following:

- Accountabilities and responsibilities
- Policy, procedures and expectation

  - Business ethics and code of business conduct
  - Procurement processes
  - Commercial issues
- Spare Parts Inventory Management and Deployment: Typically in the NGPP industry, the information on spare parts demand, spare part specifics and requirements, and inventory or warehousing is kept at the NGPP site. Inventory management is a critical component of the NGPP maintenance program. A maintenance foreman has to know if a required spare part is on site or if it has to be ordered so that he can determine equipment repair time frames. NGPPs typically have a warehouse and a person totally responsible for the spare parts receipt, documentation, segregation and bin location in the warehouse. Documentation and certification supplied with the spare parts should be recorded per the PO and filed per the equipment name so that traceability can be verified. Receipt verification should then be transmitted to the procurement department so that payment can be made to the vendor. The process of receiving and accounting for part returns is also part of inventory management. Steps involved could include return receipt, return categorization, return accounting, return processing and service closure.
- If an OPCO has several NGPPs, a spare parts stocking and warehouse location may be centralized in a gas production region. Hence, it becomes important to manage spare parts inventory across the gas production region and provide inventory visibility. The central location inventory process would also include allocation rules on how inventory needs to be deployed across the NGPPs. Safety stock requirements at every location could be based off service levels and inventory analysis models.
- Spare Parts Design and Vendor Development: A regular feature of spare parts planning is the ability to achieve quick delivery of spare parts which leads to development of local alternative suppliers versus the original equipment supplier. The local parts design, manufacturing, and vendor development becomes a vital tactical requirement to create a service industry. Substitution and modifications on equipment parts needs to be captured both on the service history as well as in the design records.

8.3 Spare Parts List of a Typical NGPP

The following is a portion of a typical list of spare parts required at a NGPP.

Table 8-1 Typical Spare Parts And Consumables

Gas Compressor Per 2 Stages	Consumables

• Pressure Safety Valves
• Connecting Rods with Bushings
• Pistons and Piston Rings Sets
• Gudgen Pins
• Suction & Discharge Compressor Valve sets
• Valve Plates & Springs
• Crank Shaft for one Compressor
• Two Gasket Sets
• One Lubricating Oil Pump
• Two V-Belts Set
• Drain Valves
• Pressure Switches
• Pressure Gauges
	• 3-6 months' supply
	  o Bulk TEG
	  o Bulk MDEA
	  o Carbon for filters
	  o Gas Drying pellets
	  o Compressor Oils
	  o Generator Oils
	  o Salt for Water softener
	  o Methanol
	  o H_2SO_4
	  o Caustic
	  o Demineralizer Resins
	  o Raw water filter sand
	  o Filters of all types

8.4 What Is Spare Parts Inventory Management?

The answer to the question of "what is inventory management?" is: Inventory management is a collection of interdisciplinary processes that include a full circle from supply chain management (SCM) to demand forecasting, through inventory control and including reverse logistics.

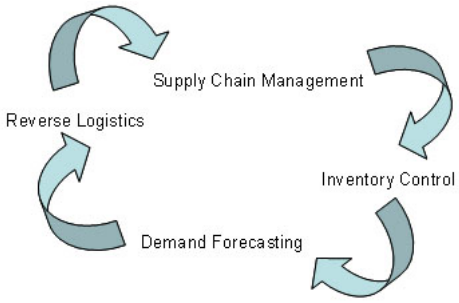

Figure 8-8-1 Inventory Management Cycle

Inventory management starts and ends SCM because many of the opportunities to improve efficiencies start with shortening order to receipt time without incurring additional cost. That said, the other stages of the inventory management cycle are no less important in attaining overall efficiency. Given that inventory in all its forms generally represents one of the top three expense lines for nearly all companies, there is a universal need for applying the right discipline to each step in the process.

While in the perfect world, all inventory is consumed daily, we must operate businesses in a less than perfect environment. The challenge is: how close can one get to perfect before “just in time” (JIT) inventory management becomes a little too late. Inventory management in its most efficient form incorporates many different technical applications of inventory management models. Such concepts as safety stock, economic ordering quantity, cost of goods, inventory turnover, customer managed inventory and a vendor managed inventory, whole spectrum of underlying inventory management tools play a critical role in inventory management. Different industries have different needs, but many of the concepts are the same.

While the key principles of inventory management remain the same across all industries, the areas which require emphasis vary from sector to sector. Learning to apply the right inventory management tools is part of executing inventory management. By applying lean practices to all aspects of the inventory management cycle, businesses can reduce investment in standing inventory, plant rental, shipping costs, reverse logistics while maintaining or improving customer service levels and in-stock metrics on critical inventory.

8.5 Spare Parts Inventory Management

Spare parts inventory management shares many traits with standard inventory management, but requires an extra layer of cost consideration. Whether a maintenance department or maintenance and repair organization (MRO) is internal to a NGPP, or providing maintenance services to a group of NGPPs, efficient spare parts inventory management plays a critical role in reducing costs and maximizing MRO customer service.

Typically, a NGPP production facility is large enough to have an internal or site located MRO. The five steps below collect the information an OPCO and NGPP needs for executing effective spare parts inventory management.

Step #1: Understanding existing (or projected) consumption. Because repairs normally happen due to system failures, rather than as part of a reliability based maintenance plan, many MRO or logistics professionals overlook consumption predictions. Depending on the age of the MRO, spare parts consumption can be based on either actual historic consumption, or projected based on original equipment manufacturer preventative maintenance recommendations and/or historical records for the system.

Step #2: Calculating system failure costs associated with revenue. In-stock levels and the size of on-site inventory should be directly linked to costs of system failure or “down time”. Every piece of equipment or equipment service in a NGPP facility plays a role in determining failure costs. Most equipment services in a NGPP have installed redundancy, like 50% or 100% sparing for pumps and compressors. Some full equipment sparing (i.e. spare pump) may be located in a warehouse. Non-critical services not associated with revenue impacts, may have equipment that acts as a single point of failure for the entire non-critical service

Step #3: Estimate soft cost impact of out-of-stocks. It is a picture familiar to many industry professionals: small spare parts hoarded in toolboxes, a spare motor under a desk in the maintenance supervisor’s office, or the "secret stash" closet located away from the warehouse leads to an additional inventory of thousands of dollars’ worth of parts. Reducing inventory dollars on the books as part of spare parts inventory management may lead to an off-books rise in inventory costs.

Step #4: Work with vendors for cost-reduction and in-stock improvement. In many instances, leveraging vendor relationships will allow reduction in overall inventory dollars and keep better in-stocks. Rather than using time and resources to monitor spare parts usage, establish reorder points, and project parts required for preventative maintenance, the manufacturer can often provide a starting point for stocking levels. In the best cases, seek vendors willing to provide spare parts inventory management on a consignment basis where only consumed parts are invoiced.

Step #5: Calculate costs (hard and soft) of expedited orders. It is sometimes impossible to maintain a spare parts inventory for every contingency. The key is to establish an expedited spare parts ordering process and understand the costs involved. This allows subordinate managers and maintenance person to make good decisions on what to expedite and what to order on standard orders.

These five steps are just the beginning to achieving optimum spare parts inventory management. Cost reduction, increased system availability, and improved moral because workers have the tools they need to do their jobs are just some of the benefits.

8.6 Material Control of Purchased Spare Parts Inventory

The material control function commences at the PO stage. Material control at the NGPP site warehouse or central warehouse ensures that:

- Materials are thoroughly checked on receipt, segregated and stored securely under optimum conditions.
- Materials are only accepted into the warehouse when they have passed a thorough receiving inspection. Anything failing this inspection is held in a special quarantine area until the reason for rejection has been resolved.
- Documentation and certification supplied with materials and equipment is recorded and filed in such a way that traceability can always be verified.
- Special arrangements are made for the reception, handling and storage of hazardous materials.

- The integrity of delicate equipment (e.g. instrumentation) is maintained by providing heated storage or similar care.
- Manufacturers storage instructions for such items as rotating machinery and electric motors are followed at the specified frequencies.
- Materials are only issued for construction against any authorized materials requisition.
- Detailed records are maintained at all times.

Material control provides a systematic and orderly approach to the acquisition and assembly of thousands of different components needed to maintain the reliability of a NGPP to operational specifications. The continual reconciliation of all materials against original material requisitions, POs, specifications, etc. will assist in the identification of any material shortages or surpluses which may be available for disposal. In order to provide a complete management tool for the proper execution of the NGPP it is recommended that a computerized material control system (MCS) is employed from the outset. The MCS will enable the position of materials to be tracked at any time and the availability of materials for maintenance issue to be determined.

8.7 Procurement Management

Procurement or purchasing management in the gas industry involves people, processes and technology. Purchasing involves the sourcing, purchasing and delivery of goods and services that an OPCO needs to conduct the OPCO's NGPP business. The purchasing department is a very important part of conducting a business as its good management directly impinges on the bottom line. One of the fundamentals of purchasing is that goods are purchased at the best price and terms in order to deliver the best profit for the company. This means that strong and easily understood purchasing procedures need to be in place. Some companies interchange the word procurement for purchasing, in others procurement means purchasing via tender and purchasing means the day to day purchasing via master sales agreements (MSAs) with a select group of suppliers.

One of the methods that are used to ensure good purchasing management on day-to-day purchases is the use of POs and purchase requisitions constrained by a known set of rules and procedures. Purchase orders are used to order directly with an agreed supplier. Purchase requisitions are usually raised by people external to the purchasing department when they need a particular product either for maintenance purposes or to increase stock in abnormal situations. In larger companies, and indeed even in some smaller companies, computerized purchasing and procurement systems facilitate purchasing management. As well as managing day-to-day purchasing, these systems can also manage a tender process and ad hoc purchasing activities.

One particular aid to management of the procurement department is the production of a set of procurement-analysis figures. These can often be tailored to a company's particular needs. In charge of procurement management will be the Procurement Manager and he/she will have a number of procurement and administration professionals working on the team. All professionals will have job descriptions that detail their roles and responsibilities.

OPCOs should recognize the importance of their procurement department and have a firm procurement - management process in effect. Within the OPCO, procurement principles should be defined in a handbook and cover:

- Accountabilities and responsibilities
- Policy, procedures and expectations
- Business ethics and code of business conduct
- Procurement processes

- Commercial issues

POs and Request Documentation

The PO is an instruction to a vendor to provide equipment, materials, goods or services. This instruction is conveyed to a vendor by means of a formal PO with attachments covering material and/or equipment specifications, inspection and documentation

Requirements: The order is a standalone document which when accepted by the vendor constitutes a legally binding contract. Although the PO has been issued, procurement involvement is still considerable and the principle actions through to delivery and close-out of the PO are described in the following sections.

Choosing RFI or RFQ as a sourcing tool for PO

The choice of which document to use: Request for information (RFI), request for quote (RFQ), or PO depends on the desired outcome –information, a firm proposal, a detailed price bid, or just a PO based on a vendor quotation. In some cases such as large expensive equipment, the choice may be all three document types. In other cases, it may be just the issuance of a PO based on a requested vendor quotation.

A RFI is a method of collating information from different suppliers prior to formally sourcing products or services. It is normally used where there are many potential suppliers and not enough information is known about them. It is a structured process where a long list of potential suppliers can be reduced to a short list of those organizations that are willing and able to fulfill the requirements. An RFI should include:

- Introduction and purpose of the RFI
- Explanation of scope
- Abbreviations and terminology
- Template to complete
- Details of next steps - RFQ

Why use an RFI?

- To compile detail about potential suppliers and their capabilities
- To advise potential suppliers of the intent to source this product or service competitively
- To demonstrate fairness and inclusion of all participants
- To gather information in a way that decides the next step

A RFQ is a competitive bid document used when inviting suppliers and subcontractors to submit a bid on projects or products. An RFQ is suitable for sourcing products that are standardized or produced in repetitive quantities. A technical specification must be provided as well as commercial requirements.

A PO is the final purchasing or procurement document issued by the OPCO procurement department and can be thought of as a definitive contract. The PO includes but is not limited to the following: PO number, date, detailed pricing per item, total cost, ship to address, freight payment terms, payment/commercial terms and conditions, detailed technical scope of supply and description, quantities, and delivery dates and conditions.

The RFI, the RFQ and the PO are all tools that can be used separately or in combination to achieve a successful sourcing solution.

PO Amendments after Initial PO Issuance

Purchase order amendments or change orders are issued to record agreed contractual changes both technical and commercial. It is essential that such changes are kept up to date to facilitate control and accounting activities. A request from a vendor for a relaxation or minor change to a specification and which does not have contractual implications would normally be dealt with by a concession request procedure. In these cases, although no formal amendment is issued, it is essential that a record is kept to such concession requests. In the event that the concession request is acceptable by all parties concerned (i.e. NGPP, technical, commercial etc.), a signed approval should be issued to the vendor, who is to ensure that the original copy is included in the final data dossier. If a concession request is unacceptable to any party, then the vendor must be instructed to comply with the issued PO and its attachments. The buyer is responsible for the coordination of any technical or commercial queries which may arise after the order is issued.

PO Quality Services

Professional services covering all aspects of QA and QC are required to support and complement the total procurement activity. The PO quality assurance function is to ensure that all necessary vendor procedures are in place and are implemented effectively such that the required plant and materials are fully defined. Audits may be carried out on the vendor during the life of an order, to check compliance with the relevant codes and standards. The NGPP and procurement quality function ensures that the equipment ordered is supplied in accordance with the PO specification, that it meets all the quality requirements and is only released after a satisfactory final inspection. The quality function ensures that all quality plan stages are witnessed or verified to be 'as specified' and that all such stages are signed off. Documentation and certification are reviewed and accepted at the manufacturer's works. Documentary evidence of the achievement of quality services objectives is provided by means of completed quality plans, audit reports, inspection reports, release notes and manufacturer's certification.

Document Control

The importance of documentation and documentation control has grown as both OPCO and statutory requirements have been developed and adopted. Document control groups have been established to ensure conformity with requirements. The responsibility of document controllers is to ensure that all drawings, data and test certificates are supplied by the vendor on the due dates as specified within the order and agreed at the pre-production meeting, to this end they work closely with expediters. The document controller also monitors and coordinates the flow of documents for approval and comment within the NGPP to ensure speedy responses are sent to the vendor so that no delays are incurred, thus maintaining delivery requirements.

Lastly, this function has the responsibility of ensuring that all retained documentation and certification have been checked, validated against orders, and specification requirements, so that full traceability of material to valid documentation is maintained. Progress payments can be considered on certain orders as an incentive for early submission of required documentation.

To ensure that full and final submission of required documentation is issued by the vendor in a timely manner, it is prudent to have 10% retention of the total invoice value held against receipt and approval of all final documentation. This may not be possible where materials are being shipped to another country.

Expediting

Although a vendor who has accepted an order is contractually bound to meet material and documentation delivery requirements, experience has shown that without monitoring and vigorous expediting, slippage is likely to occur. To

minimize this and to ensure timely completion by the vendor of the order requirements, it is essential for office and field expediters, in conjunction with the buyer to monitor and expedite the vendor throughout the life of the order.

Their role is to obtain information from the vendor, covering for example, raw material availability, sub-order issue, production schedules and documentation issue in conjunction with documentation control. Receipt of such information will enable the identification of possible

Transportation and Logistics

The responsibility for delivering materials and equipment to the NGPP site may either be taken by the NGPP, or arranged by the respective suppliers. Deliveries within the country of origin should be left in the hands of the supplier since it is their responsibility to make all the logistical arrangements and take all the risks until the goods arrive at site. However, if delivery is of paramount importance or special handling is considered necessary, the NGPP may well decide to take over the risk and responsibility of making all delivery arrangements from the suppliers works to site. Whoever is finally responsible for delivering materials to site must comply with all relevant customs formalities, taxation laws and national and international regulation governing the movement of goods. Delivery of materials or equipment to site following inspection must be accompanied by a copy of the relevant Inspection release note.

Settlement of Claims

In most cases the PO is issued, materials received as required, invoices rendered and settled without difficulty. However, there are on occasions the need for resolution of claims which can take up considerable time. Establishing relevant facts at such a late stage in the life of a PO is sometimes difficult, but this action is assisted when good comprehensive records are maintained.

Close-out and Payment

On completion of delivery of spare parts and equipment, receipt of all documentation and settlement of claims, an order close-out report should be compiled finalizing cost reconciliation and commenting on vendor performance. It is imperative that POs are closed out in a timely manner and that payment is made based on the PO commercial terms and conditions. NGPP personnel should take the necessary steps and follow the procurement procedures so that payment of POs will occur as soon after goods and documents are delivered. Payments are normally made to the vendor or supplier within 30 days after paper work is finalized.

Procurement Management Personnel and Processes

Building the right team is critical to the success of the procurement management process. The best procurement manager has the breadth and depth of knowledge to execute:

- Leadership of a skilled and diverse team
- Procurement of materials (both domestic sourcing and low cost country sourcing)
- Execute strategic cost management on the supply chain
- Oversee internal materials management
- Make decisions about produce souring methods

In order to do these tasks successful, the person assuming the role as procurement manager must have the skills necessary to oversee or actively co-operate with:

- Material managers
- Transportation directors
- Strategic sourcing consultants
- Production managers

- Vendor partners

Procurement and inventory management staff on the team must be quick to embrace new methods for procurement management optimization. The team members understanding of the needs and requirements of internal and external customers is the key to success. They must understand the metrics for measuring internal inventory efficiency such as inventory turnover rate, and make sure that procurement system tools, inventory management systems, and other inventory and payment systems all tie in together. Without the right data at the right time, any gains from selecting the best strategic sourcing methodology is lost in execution.

Purchasing Procedures for a Well-run Procurement Department

In a well-run procurement department there is always a quality set of purchasing procedures. The purchasing procedures are usually incorporated in a formal document or manual that details each of the specific purchasing procedures. The manual also sets out the division of responsibilities for the NGPP personnel and procurement departments' personnel in the purchasing cycle. Standard purchasing procedures that are inherent within most purchasing departments are:

- Purchase from Key Suppliers. This is procurement from a normal set of suppliers that all have master service agreements. This is a fairly painless procedure that can often be executed automatically by a computer system.
- Ad hoc Purchases. In times of unusual selling activity or when an unusual item is required there may not be an agreement with a supplier to supply these items. This procedure allows the NGPP personnel to make these unusual requests.
- Large Purchases. There may be a time when a large piece of machinery is required. In this case the purchase is usually put out to tender and several companies are requested to bid for the opportunity to meet this requirement. This procedure is not used often but is usually very well defined due to the potential risk to the OPCO and the high costs involved.
- Change of Purchase. Sometimes purchases are made but then have to be changed for some reason. This is particularly true when standard POs are placed and some change occurs.
- Goods Received. Procedures should be in place to ensure that the purchased goods are received, counted and stored in the correct manner.
- Goods Damaged or Short. There are times when the materials that are received are not that which was ordered. There may be damages or shortages. The vendor or supplier must be notified to allow them to deliver the material shortage and to allow them to return and replace damaged goods.
- Payment. Vendors and Suppliers want payment on time per the commercial terms and conditions agreed in the PO. Computer systems can deal with the actual payment, but the procurement procedures to approve payment have to be met by the NGPP.
- Logistics and Delivery - The NGPP and the procurement department should have procedures in place to monitor vendor and supplier delivery and should have logistical/transportation companies identified for use to execute the delivery if it is the NGPP's responsibility.
- Warehouse. Once all purchased items are delivered to the NGPP site, the warehouse person should be involved so that the purchased items checked against the PO, reach the warehouse, and are placed in the appropriate bin.
- Contracts and Contract Renewals. All suppliers provide their best terms when there is a contract in place. This can often be dealt with by the master service agreement, which has to be put into place, managed by procurement, and eventually be renewed.

Vendor and Supplier Management

Vendor and Supplier management has a number of definitions. Some companies believe that it is the management of vendors in order to achieve better prices and terms. Others believe that vendor management is building a relationship with vendors in order to obtain mutually beneficial interactions. There is also an increasing prevalence for purchasers to allow vendors to manage the procurement process as in vendor managed inventory systems. In this procurement process, used by many large retailers, the vendor interfaces with the purchaser's sales and inventory accounts and delivers new products on a JIT basis. Vendor management includes processes to select a vendor and then undertaking regular and frequent reviews using detailed evaluation methods. During the vendor selection process, a period of vendor analysis is undertaken to find the vendors who will provide quality products at pricing with advantageous terms. Each vendor is matched to a set of vendor selection criteria to find the most appropriate vendor for the purchasing company. Large vendors may often have vendor ratings assigned to them from reputable consultancies that greatly aid the process. The entire purchasing process and management of several vendors is assisted by a set of tools, technologies and services. Vendors align themselves with their customer's vendor management system that builds an efficient and profitable procurement relationship for both companies.

8.8 Demand and Replenishment Planning

For the successful spare parts demand and replenishment planning, it is essential to analyze the spare parts inventory based risk using various characteristics such as the frequency of part usage, the annual consumption value, the criticality, the lead time and the unit price. This risk analysis is essential as it identifies the spare parts to keep in inventory at the NGPP site. The risk analysis process is described below.

Risk Management Functions

There are four basic functions to manage risk - risk identification, risk quantification, risk probability, and risk response. The first three, identification, quantification and probability, are sometimes grouped together under Risk Analysis or Risk Assessment. With these functions completed, the last is to exercise risk vigilance. Risk vigilance is simply the recognition of the risk conditions, the ongoing response to the risk conditions on the ground, and implementation of the appropriate risk responses. The term "appropriate" is used as different risks require different approaches.

Here is an example of the application of this thinking:

- Risk identification: Failure of the bearings on a compressor is a risk.
- Risk quantification: In the event of a failure, will anyone get hurt and how hurt? How much money will the event cost per hour or day of downtime? What if the repair takes a few weeks or months instead of a few hours or days?
- Risk probability: What is the chance this risk will happen? Has it happened before? Does the manufacturer warn us about the risk? Do we have statistics about "mean time between failures" for the bearings in question?
- Risk response: Can we eliminate or anticipate the failure? What parts will be needed? How costly is the kit? Can the risk be transferred to someone else (by using supply contracts or buying insurance)? Does the waiting time for the part introduce any unanticipated risk?
- Risk vigilance: How do we organize our team and maintenance strategy so that an event becomes apparent quickly enough that we have time to respond? In addition to vigilance this aspect includes responding to changes in the character of the risks over the life span of the plant.

Each of the following steps is important and the steps must be applied in sequence. If there is no data for a certain step, that is a sign that the risk management program is under-developed and a trigger to collect the required data. Before proceeding the value of spares to should be considered. All risk management reviews require time and attention and for low values of spares holdings it may be a better choice to just stock the required spares. At a minimum this assessment should be carried out for all spares requiring an investment of more than $1,000.

- Step 1: Identify the specific spare part that will be considered for this process.
- Step 2: Determine the criticality of the systems, machines, and processes in the NGPP. Segment criticality into breakdowns that can shut the whole plant or stop distribution, breakdowns that take out a single process or service, and breakdowns that reduce output. Other criticality levels can be developed to suit the NGPP layout and plant design.
- Step 3: Identify any significant safety and environmental risks. This should include risks from simple slips, trips and falls, all the way up to a safety or environmental catastrophe.
- Step 4: Interview other stakeholders to identify risks (such as operations, engineering, and supply chain) and weigh the risks they see. This would include impacts on other operations: gas supply upstream, gas sales downstream, any other disruptions or delays.
- Step 5: Convert the consequence of the risk into the potential financial impact based on the downtime effect and other losses.
- Step 6: Create a matrix for each category. Score the consequence in the event that the spare part is not available when required. Note that this does not automatically assume that the part should be in stock. Purchasing a spare should be considered only as the last resort, firstly consider the following:
    - Can repair of the failed item be conducted in a suitable time frame?
    - Can an alternative item be used?
    - Can replacement be delayed until the vendor delivers the spare?
    - Can the plant/process be controlled without the part for the lead time for delivery?
    - If the answer is yes to any of the above questions then follow that process first and document any required controlling measures.
    - If more than one category applies, use the highest consequence score.
- Step 7: Using the matrix identify the probability score based on the expected frequency or potential for failure.
- Step 8: Use the decision matrix to determine the required course of action.

In most cases this matrix will indicate whether or not a spare should be procured. What this process cannot do is determine how many spares to purchase. To use this risk management approach for different spare parts holding levels just re-run the process based on that holding level but remember that justifying more than one spare requires that for the subsequent spares the time frame for failure is limited to the lead time for re-stocking as this is the period of risk exposure. In approximately one quarter of situations, the matrix does not make a definite suggestion and leaves the decision to a judgment call. This reflects the borderline cases where specific company local knowledge will inform the answer.

Understanding the Consequences of a Breakdown

There are several consequences of breakdown and they are usually classified as safety, environmental and/or economic. In almost all cases, after the safety and environmental consequences are evaluated and eliminated, as much as possible, all the subsequent consequences are really variations on economic themes. Having the right parts

helps keep the consequences of breakdown to a manageable level. These questions and considerations are at the heart of risk management.

Investment vs. Risk Management

Despite the fact that an inventory of spare parts costs a good amount of money and that accountants classify inventory as an asset, and that some spare parts have been increasing in cost faster than inflation, they are still not a great investment. Some parts become obsolete before they can be used, some parts get damaged, and some even go bad. To add insult to injury, a spare part can be bought today and the return on investment (ROI) is not collected for many years because the part is used in the future. Other investments yield a ROI of 30-50%, starting immediately. Therefore, this can be the economic criteria to be used.

So, why would any business, that is supposed to operate in a way to make a profit, ever want to make that investment? The answer is risk management and to understand risk better, the real function of maintenance spare parts needs to be understood by the OPCO. When dissecting the spare parts use, it becomes clear that there are only two reasons to hold a supply of spare parts. First: Having the part available does not necessarily mean that the part is stocked on site. In all the scenarios that follow having the part available is the issue, not owning the part. It is critical that this is understood. There are a couple of well used strategies that can be used to have a part available without having the part in stock at the NGPP warehouse:

- The most common internal method is for the NGPP to share the part with other plants (belonging to the same company) with similar equipment.
- The most common external method is to make an agreement with a vendor to supply a part within a specified number of days/weeks.
- Variations include consignment stock where the part is kept at the NGPP warehouse but is owned by the vendor until it is used.

Little and Big Reasons to Hold a Supply of Spare Parts

The little reasons, sometimes vendor packaging creates inventory, meaning that the exact quantity cannot always be procured. Six are needed, it sells in eights. Sometimes we can obtain parts more cheaply if we buy them in economic quantities; just be sure that they are all used. Sometimes we need to purchase in advance because maintenance workers are more productive if they have all the parts required before starting work.

The big reason equipment, like compressors, occasionally fail in spite of intense preventive maintenance inspection scrutiny, is that the failure symptoms are missed and the compressor fails. In some cases the consequence is small and easily manageable (both practically and financially). But if the consequences of waiting to put the compressor back into service are dire, expensive, harmful, dangerous, or disruptive to gas sales, then the NGPP must manage that potential risk. Often that means ensuring access to spare parts so that an extended length of time does not occur before commencing the repair. This means that the real reason that a NGPP needs to stock the part in inventory is that the NGPP can't reliably get the supply within the NGPP's planning horizon. The planning horizon might be zero for break downs, or a month with condition monitoring, or six months for a major PM. The NGPP hold spare parts because the part can't be available within the time frame of the planning horizon.

8.9 Design and Vendor Development

Design and vendor or supplier development is the process of creating vendor or machine shop capability in close proximity to the NGPP to minimize spare parts delivery time. This is especially important when original equipment

suppliers have long delivery schedules of many months and their price is also very high. The effort to achieve quick delivery of spare parts normally leads to development of local alternative suppliers versus the original equipment supplier. The local parts design, manufacturing, and vendor development becomes a vital tactical requirement to create a service industry. At a minimum, a supplier development program should be aimed at achieving the following:

- Lower supply chain total cost
- Increased profitability for all supply chain participants
- Increased product quality
- Near-perfect on-time-delivery at each point in the supply chain

Most supplier development programs do not do enough to meet these goals. Auditing suppliers once per year to determine if they've met certain on-time-delivery and quality goals will not actually fulfill the purpose of a supplier development program. One could call this type of work "supplier checking and verification" rather than "supplier development." Supplier development requires much more work than auditing and checking does.

A supplier development program must be aimed at improving suppliers performance, not beating them into charging less or simply auditing and rewarding them. The suggested supplier development areas are:

- Business systems: financial sustainability, social responsibility
- Production: capacity, JIT delivery
- Quality: Six Sigma, continuous improvement
- New product introduction: innovation, dominant design, advanced product quality proving
- Sub-supplier development: sourcing, supplier management, performance assessment

Supplier development is all about providing suppliers with what they need to be successful in the supply chain. Suppliers need to become extensions of their customers.

8.10 Supply Chain Management

SCM is the systemic, strategic coordination of the traditional business functions and the tactics across these business functions within a particular company and across businesses within the supply chain, for the purposes of improving the long-term performance of the individual companies and the supply chain as a whole. It has also been defined as the design, planning, execution, control, and monitoring of supply chain activities with the objective of creating net value, building a competitive infrastructure, leveraging worldwide logistics, synchronizing supply with demand and measuring performance globally. According to the Council of Supply Chain Management Professionals, SCM encompasses the planning and management of all activities involved in sourcing, procurement, conversion, and logistics management. It also includes coordination and collaboration with channel partners, which may be suppliers, intermediaries, third-party service providers, or customers. SCM integrates supply and demand management within and across companies. More recently, the loosely coupled, self-organizing network of businesses that cooperate to provide product and service offerings has been called the Extended Enterprise

SCM is a cross-functional approach that includes managing the movement of raw materials into an organization, certain aspects of the internal processing of materials into finished goods, and the movement of finished goods out of the organization and toward the end consumer. As organizations strive to focus on core competencies and becoming more flexible, they reduce their ownership of raw materials sources and distribution channels. These functions are increasingly being outsourced to other firms that can perform the activities better or more cost effectively. The effect is to increase the number of organizations involved in satisfying customer demand, while reducing managerial control

of daily logistics operations. Less control and more supply chain partners led to the creation of the concept of SCM. The purpose of SCM is to improve trust and collaboration among supply chain partners, thus improving inventory visibility and the velocity of inventory movement.

Main functions of SCM are as follows:

- Inventory management
- Distribution management
- Channel management
- Payment management
- Financial management
- Supplier management
- Transportation management
- Customer Service management

Successful SCM requires a change from managing individual functions to integrating activities into key supply chain processes. In an example scenario, a purchasing department places orders as its requirements become known. The marketing department, responding to customer demand, communicates with several distributors and retailers as it attempts to determine ways to satisfy this demand. Information shared between supply chain partners can only be fully leveraged through process integration.

Supply chain business process integration involves collaborative work between buyers and suppliers, joint product development, common systems, and shared information. How a company operates often has a big impact on their supply chain strategies. Complications for supply chain could be significant as the supply chain is generally spread across multiple geographies and is primarily forecast driven. Operating an integrated supply chain requires a continuous information flow. However, in many companies, management has concluded that optimizing product flows cannot be accomplished without implementing a process approach. The key supply chain processes are:

- Customer relationship management
- Customer service management
- Demand management style
- Order fulfillment
- Manufacturing flow management
- Supplier relationship management
- Product development and commercialization
- Returns management

Best-in-class companies have similar characteristics, which include the following:

- Internal and external collaboration
- Initiatives to reduce lead time
- Tighter feedback from customer and market demand
- Customer-level forecasting

Other critical supply business processes that combine these processes are:

- Customer service management
- Procurement
- Product development and commercialization
- Manufacturing flow management/support
- Physical distribution
- Outsourcing/partnerships
- Performance measurement
- Warehousing management

9. Laboratory and Sampling Practices/Procedures

This section includes the following: Laboratory safety; housekeeping, flammable liquids, chemicals & MSDS, compressed gas cylinders and sampling; gas samples, liquid samples, onsite lab analysis, offsite lab analysis, gas sampling procedure for HC and/or sulfur analysis, sampling equipment required, sampling method for natural gas products-trap & purge.

9.1 Sampling

General Gas and Liquid Samples

Gas and liquid samples should be taken in a NGPP to help the operations personnel make adjustments to the process, for maintenance personnel to determine performance of engines and equipment, and for engineers to conduct economic analyses for process optimization. If the gas plant OPCO also operates the oil and gas field and wells, each well should be sampled for its gas and HC liquid content. In the initial design stage, the gas/oil wells should be tested for trace elements such as H_2S, hydrogen, carbon monoxide, helium, oxygen, and mercury along with the normal chromatographic gas HC analysis.

Gas Samples:

Gas samples at a NGPP should be taken at least once per month and sent for chromatographic analysis. Some NGPPs have chosen to have their own chromatographs and therefore can conduct their own analyses on a more frequent timeframe.

Typical gas samples to be taken are:

- Gas at each wellhead
- Combined inlet gas to the compressor or NGPP
- Dry residue gas to sales
- Fuel gas
- Inter-stage compression gas (each quarter)
- Gas before and after dehydration and sweetening processes
- Other locations as deemed necessary by engineering and operations personnel

Liquid Samples:

Liquid samples should be taken monthly as the gas samples, but some like oils can be taken quarterly. Liquid samples will consist of HC liquids, water, oils, and gas treating solutions such as MDEA and TEG. MDEA and TEG solutions should be tested stringently for degradation products and other performance reducing heat stable salts. Typical liquid samples in a NGPP are:

- Wellhead gas condensate
- Compression scrubber liquids
- Natural Gas Liquid (NGL) products - propane, butane, natural gasoline
- Lean and rich MDEA and TEG and/or other liquid processes
- Raw, reverse osmosis, and demineralizer water
- Engine and compressor oils to check for metals which indicate mechanical wear

Onsite Analysis

Typical onsite laboratory checks of the liquid solutions, taken daily or weekly, should include the following:

- Check the rich and lean pH. For lean MDEA, pH should vary between a pH of 7.0 to 7.5. The rich MDEA should be above 5.5 pH.
- Specific gravity
- Color test - liquid is clear as water
- Set test - let the samples sit for 24 hours in a clear beaker. Sediment on the bottom indicates a particulate or heat stable salt problem. Floating layer on top indicates liquid HCs are present
- Check the Raw and RO water system make with an OHM meter to determine hardness
- Weigh a certain amount of MDEA/TEG to determine its specific gravity and thus the MDEA/TEG concentration
- Filter tests to determine particulate contamination
- Other tests as test instrumentation allows

Offsite Lab Analysis

Liquid Samples: Liquid samples should be sent to offsite labs for complete analysis.

Natural Gas Collection, Shipping and Analysis:

Due to the unstable and reactive nature of many Carbon containing compounds with the steel containers, a full compliance of any typical testing method requires analysis of the samples at the offsite lab within 24 hours of collection. The best practice call for collecting samples as late in the day as the sampling plan allows, then shipping the sample to the lab via priority overnight delivery. The sample then arrives at the lab location early in the day, ensuring analysis within the holding time. Analysis is performed following ASTM 1945/D3588, which is a gas chromatography method

Natural Gas Analysis: Natural gas is a naturally occurring mixture of HC and non-HC gases found in porous geological formations (reservoirs) beneath the earth's surface. The chemical composition and heating value (BTU content) of natural gas varies with the reservoir source, processing / conditioning steps, and pipeline company. Processed, “merchantable” natural gas is primarily a mixture of paraffinic HCs with the following median composition: methane (93%), ethane (3.1%), propane (0.5%), isobutane (0.06%), n-butane (0.05%), isopentanes (0.02%), n-pentane (0.02%), hexanes + (0.04%), along with Nitrogen (1.2%), and CO_2 (0.6%). Odorants (i.e. tert-butyl mercaptan) are added to HC gases and liquids for safety purposes. Low levels of water vapor, Hydrogen, Carbon Monoxide, Helium, Oxygen, and C6-C14 HCs are normally considered "negligible" constituents of most processed natural gas streams. Notable exceptions involve some LNG-based applications. Processed natural gas can be blended with reformed gas (i.e. 60/40) on a seasonal basis to increase its BTU content. In addition to fuel use, natural gas is a feedstock (hydrogen source) for ammonia production and a source of light HCs (i.e. ethane/propane/butane) for chemical synthesis or NGL products

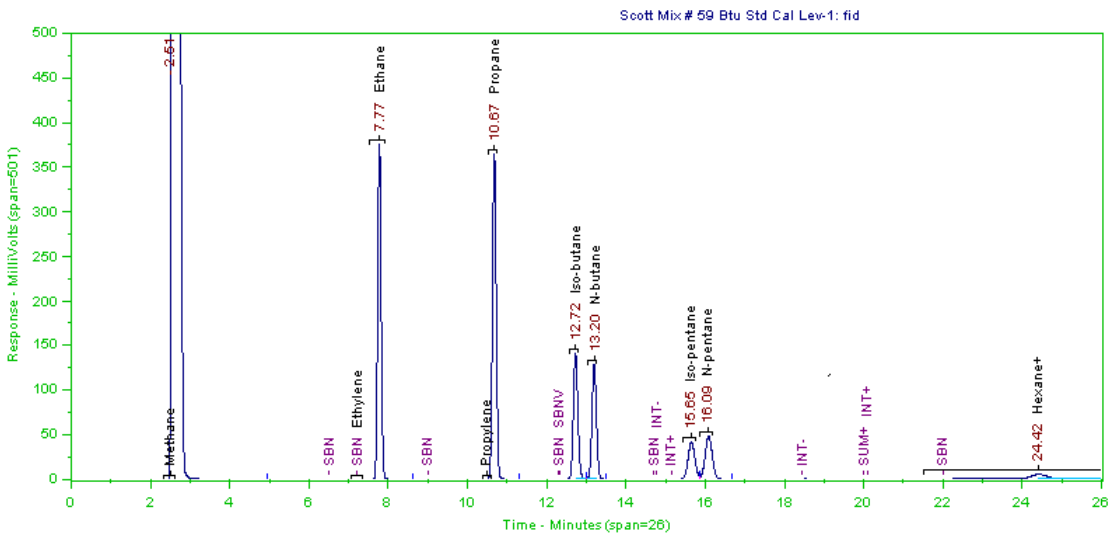

Figure 9-1 Typical Gas Chromatograph Read Out

Fuel Gas Analysis: Fuel gas analysis is used to determine turbine efficiency, evaluate commercial suppliers, ensure fuel quality, satisfy emission requirements, and establish fuel pricing. For many applications, fuel specifications are set by professional groups (i.e. ASTM International, ASME, Gas Processors Association (GPA), Compressed Gas Association, National Propane Gas Association), original equipment manufacturers, fuel suppliers, or government agencies such as the U.S. Environmental Protection Agency. Examples of standard tests performed on natural, manufactured and liquefied gases (LG) include: composition, odorant level/total sulfur content, % carbon-hydrogen-oxygen-nitrogen-sulfur "ultimate analysis," BTU content (higher heating value and lower heating value), physical properties such as vapor pressure, density, specific gravity, compressibility factor, average molecular weight, corrosivity and impurities (i.e. water, sediment, oil, etc.). In addition to fuel usage, light HCs such as ethylene, propylene, butylene, butadiene, and acetylene are important feedstocks for chemical synthesis. Some background information about these fuel & feedstock commodities is presented here for review.

NGLs or Liquefied Gas (LG) Analysis: NGLs include fuels and refined feedstocks, which exist as liquids when stored under pressure and are vaporized for use as fuels or for synthesis reactions. ASTM International D 1835 and GPA 2140 Specs, define the required properties of LG fuel grades, NFPA Std. 58 concerns shipping/storage and odorant treatment. Examples of common NGLs and LG's include:

- Ethylene/Propylene/Butylene/Butadiene: Normally high purity feedstocks (99.5+ %) used for many fine synthesis reactions. Trace impurities such as Hydrogen, Carbon Monoxide, CO_2, Oxygen, Water, Acetylene, light HCs, sulfur gases & oxygenates (i.e. alcohols, aldehydes, ketones, esters) are important to monitor.
- Propane-Propylene grades: Commercial (i.e. residential fuel) grade liquid propane (LP) is predominantly propane &/or propylene. HD-5 Grade (special duty engine fuel) has a more tightly defined composition that is 90+% propane, 2 - 5% propylene & lower amounts of other C2-C5 alkane/alkene HCs. Ethyl mercaptan or thiophenes (tetrahydrothiophene) are typical LP odorant additives.
- Butane-Propane (B-P) mixtures: Commercial grade liquid B-P mixtures are predominately used as fuels in climates & applications that do not experience low ambient temperatures.

- Butane-Butylene grades: Commercial grade liquid butane is predominantly butane &/or butylene mixtures that are used as fuels in industrial applications or as residential fuels in warm climate regions.

9.2 Laboratory General Practices and Procedures for Safety

- Individuals must be trained prior to performing any laboratory procedures.
- Because of the potential hazards involved, all laboratory personnel must develop an attitude of safety awareness. Apparatus, equipment, process and materials must be checked and verified to be correctly set-up before proceeding with any laboratory operation.
- Laboratory personnel must be knowledgeable of the potential hazards of the materials with which they work. This information can be obtained in a variety of ways, including MSDSs, container labels, and through the safety engineer.
- PPE is furnished by the company and must be worn by the employee whenever conditions warrant.
- Every laboratory worker shall know the location of all emergency equipment and be thoroughly familiar with their operation.

Housekeeping

- Housekeeping in the laboratory is everyone's responsibility. Good housekeeping consists of the orderly arrangement of equipment, chemicals, and supplies, and the routine removal of waste and unnecessary materials.
- Apparatus should be assembled in a neat and orderly fashion. Bench items should be arranged away from the edge of the bench or table to reduce the possibility of spilling or damaging them.
- Connecting lines and infrequently used service lines shall be installed at the back of the setup and only necessary lengths of tubing should be used.
- As materials, equipment and apparatus become idle or excess; each shall be cleaned and removed to a suitable out-of-the way location or returned to storage.
- Toxic, flammable and other dangerous materials shall be properly stored in an approved, safe location in the work area. Only quantities necessary for daily needs shall be kept in the work area.
- All apparatus and equipment shall be cleaned frequently to prevent accumulation of dust and dirt.
- All spilled material, whether liquid or solid, shall be cleaned up promptly and completely. If the spilled material is flammable, toxic, or corrosive, all precautionary measures must be taken before and during the cleanup operation to prevent injury.
- Waste, rags, broken glassware, waste oils, reagents, etc., must by properly disposed of on a daily basis. Glassware, syringes, and chemical containers must be placed in disposal containers so labeled.
- All aisles, walkways, halls and exits must be kept, clean, dry and free of bottles, boxes, sample crates and other obstructions and tripping hazards.
- Areas around eyewash fountains, emergency showers, firefighting equipment, electrical controls, etc., are to be kept free of obstructions at all times.
- Bench drawers and cabinet doors shall be kept closed when not in use.
- Stepstools shall be kept under a table, against the wall or in some other out-of-the-way place.
- Excess wearing apparel, such as coats, hats, overshoes, etc.,
- shall be kept in lockers or some other place away from the laboratory.

Flammable Liquids

1. Since a wide variety of HCs and other flammable and combustible liquids are frequently used in laboratory activities, special precautions must be observed to avoid fire and explosion.

2. By definition, flammable and combustible liquids are divided into three general classifications:
    a. Flammable Liquids - Class I, are liquids having flash points below 100°F (37.8°C).
    b. Combustible Liquids - Class II, are liquids having flash points at or above 100°F (37.8°C) and below 140°F (60°C).
    c. Combustible Liquids - Class III, are liquids having flash point at or above 140°F (60°C).
3. The flash point of a liquid is the minimum temperature at which the liquid gives off vapor in sufficient quantity to form an ignitable mixture with air, near the surface of the liquid. The flash point can be used to provide a quick assessment of the inherent hazard involved in handling a given flammable liquid under normal conditions.
4. Since the principal difference between flammable liquids and combustible liquids, is the temperature at which vapors are released the vapors from the combustible liquid may be just as hazardous as those from a flammable liquid. Therefore, both liquids are often referred to as flammable liquids.
5. Safety in handling flammable liquids demands many considerations. The physical and chemical properties of the materials play a complex part in setting the proper conditions to create a flammable mixture of vapor and air. For most purposes, however, the flash point can be used to provide a simple measurement of the inherent hazard involved in handling a given flammable liquid under normal conditions.
6. The following is a list of representative fluids and their typical flashpoints:

Table 9-2 Chemical Liquid Flashpoints

Chemical Liquid	Flash Point (Closed Cup)
Gasoline	-50°F
Ethyl Ether	-49°F
Acetone	0°F
Ethyl Alcohol	55°F
Kerosene	100°F
Paraffin Oil	444°F

7. Since ambient temperatures under relatively normal circumstances can easily reach 100 degrees, liquids with flash points of 100 degrees F and less require special precautions to isolate their vapors from sources of ignition.
8. The vapors of most flammable liquids are heavier than air. It is this characteristic that causes these vapors to settle to floor or ground level and spread out over large areas, therefore, the point of ignition in an explosion can be far from the source of vapors.
9. Only a minimum amount of flammable liquids, necessary for the job at hand, shall be kept in the work area to reduce the potential fire hazard
10. When mechanical stirring of flammable liquids is required, only air-powered or induction-motor-powered agitators are to be used.
11. Flammable liquids in excess of the amount actually being used must be kept in approved containers. The overall quantity of flammable liquids kept in the laboratory should be kept to a minimum necessary for the job in progress.
12. All containers of chemicals must be properly labeled to identify their contents. This includes all glassware containing chemicals.

13. Extreme caution shall be exercised to assure that no flammable vapors are present when using Bunsen burners or any other ignition source during laboratory operations.
14. Electric hot plates and other hot surfaces are sources of ignition for flammable vapors and shall be accorded the same consideration as open flames.
15. Flammable liquid spills require immediate action to assure that vapors do not reach a source of ignition. Extinguish all flames in the area at once and shut off all electrical devices (from a remote location if possible).
16. An adequate supply of CO_2, halon and/or dry chemical fire extinguishers should be readily available at all laboratory locations. These types are safe to use on flammable liquid or electrical fires and each extinguisher has detailed operating instructions on its case.
17. Surplus or waste flammable liquids must not be poured into sink or sewer drains. Such liquids shall be accumulated in approved marked containers and properly disposed of as a hazardous waste.

Chemicals

The environmental affairs and safety department of the OPCO is responsible for development of information on toxicity of chemicals and the precautions to be taken in their use. "Health information bulletins" can be issued covering some of the chemicals used by the Company. These Bulletins should be consulted when available and applicable. In case of serious accidents involving toxic materials, the manager in charge of Toxicology should be immediately notified by telephone.

1. A MSDS should be available in the workplace for every chemical used. All employees should know how to obtain and how to interpret them.
2. Injury to laboratory personnel resulting from chemicals use can usually be avoided by observance of the following:
    a. Handle materials and equipment properly.
    b. Provide good ventilation of the work area.
    c. Use PPE when necessary.
    d. Take immediate action in case of splash, spill, boil-over or other unexpected release of hazardous liquids or vapors.
3. Each container should be properly labeled to identify its contents. In addition, the label must include appropriate precautionary information. Identification labels are required even if the contents are known to be harmless.
4. Many of the stronger acids and alkalis are extremely hazardous. When used in a concentrated form or when heated they also present a severe hazard through the heavy flow of vapor which is released.
5. The handling of chemicals which might give off toxic fumes, vapors or gases should be performed in fume hood, with assurance that the exhaust blower is operating.
6. All unknown chemicals, reagents and samples must be considered hazardous until confirmed to the contrary.
7. When examining unknown compounds by smelling, special precautions must be taken. Tests for odors should be made by wafting the fumes from the container toward the nose. The nose should not be held directly over the opening.
8. Pipettes should be filled using vacuum from an aspirator bulb or other suitable vacuum line with rubber tubing. Never pipette chemicals via mouth.

9. Some apparently harmless chemicals react violently when combined with others. Consult the MSDS's before doing so.
10. When mixing any concentrated acid with water, ALWAYS add the acid to the water - never the reverse.
11. When handling acids or other corrosive substances, rubber gloves, laboratory coats or aprons and chemical goggles shall be worn.
12. If poisonous or irritating gases, fumes, vapors or dusts are likely to be inhaled, suitable respirators or other protective breathing equipment is to be used. If there is any question as to the correct respiratory protection, consult a Safety Engineer for guidance.
13. Contact lenses must not be worn by employees while working in a laboratory. Employees must wear chemical splash goggles when working in any environment where the possibility of flying particles, splashes or sprays of chemical liquids or dusts which may be damaging to the eye.
14. Prevention of eye and face injury consists of avoiding splashes and flying particles, ventilating to remove toxic or irritating vapors, and wearing chemicals goggles and face shield whenever chemicals are being handled.
15. Care must be taken when removing chemical goggles to avoid wiping fluid from the goggles' rim into the eyes. To avoid this, the goggles should be removed with an upward sweeping motion.
16. If eyes become contaminated by chemical liquids or vapors, they are to be flushed with water for at least 15 minutes.
17. The location of the nearest safety shower should be known by every employee working in the Lab. If burns occur, immediately flood the burned area with large quantities of water. Remove the clothing if necessary so water will reach the affected area.
18. Seek medical attention immediately if ANY skin reddening or irritation has resulted from a chemical exposure.
19. Irritation of the skin may result from contact with chemicals or vapors even while wearing the protective equipment. If this is the case, supervisors and the safety engineer immediately must be informed as soon as possible.
20. All laboratory personnel should form the habit of washing their face and hands frequently during the day. This practice will remove possible traces of irritating chemicals that can be a cause of dermatitis. This is especially important prior to smoking or eating.
21. Do not use acetone or other organic solvents to remove stains from the hands. These solvents may cause skin irritation.
22. When pouring chemicals from reagent bottles, hold the glass stopper between the index and adjacent finger of the hand, rather than placing the stopper on the bench where it might pick up impurities or cause a reaction or fire to occur.
23. Use only Pyrex glassware when mixing reagents where there is any heat of solution or reaction anticipated.
24. When opening bottles containing ammonia or hydrochloric acid or liquids of high vapor pressure like bromine, eyes are to be protected from liquid spray. Also, employees must be sure:
    a. The container contents are at or below room temperature.
    b. The glass stoppers sealed with plaster of paris or paraffin are covered with a cloth before removing seal.
    c. The bottle is held away from one’s face while removing the stopper
    d. The mouths of test tubes, flasks and beakers are to be pointed in a direction away from the body and other people in the area.

25. When mixing liquids in a confined system, consider the possibility of their spurting from the vessel because of the heat of the solution or reaction.
26. Volatile solvents and other chemicals, when shaken in separatory funnels may develop considerable pressure. Avoid potential rupture by frequent venting of the funnel by opening the stopcock when the funnel is inverted.
27. All spilled chemicals must be cleaned up promptly and completely. When feasible, flood the spill area with water, and mop up immediately. (Do not dilute with water, non-miscible liquids or chemicals which might react to give off toxic gases).
28. Spilled chemicals should not be mopped up with a cloth or rag by hand, nor attempted without wearing appropriate protective equipment. Some materials may be extremely corrosive and some may ignite spontaneously and cause severe burns. Only suitable sorbent materials are to be used.
29. Spilled acids must be neutralized by sprinkling sodium bicarbonate (baking soda) or a commercial neutralizer liberally over the spill area.
30. Spilled caustic solutions may be neutralized by pouring citric acid solution or a commercial neutralizer, poured over the spill area.
31. Avoid breathing toxic vapors from spillage. If necessary, use suitable protection against the hazardous substance and thoroughly ventilate the area. A large spill requires use of self-contained breathing apparatus, and possibly specially trained personnel wearing special protective equipment.
32. Some chemicals such as picric acid, ethers, etc., have shelf lives. These materials must not be kept beyond the time period specified by the manufacturer. Cylinders containing corrosive gases (indicating H_2S) should be dated upon receipt and returned to the supplier after 6 months.

Compressed gas cylinders

1. Compressed gas cylinders, though harmless in appearance can be extremely hazardous. Sometimes containing pressures in excess of 2400 psi, they may also contain gas that is toxic, flammable, or in the case of oxygen, one that is a strong supporter of combustion. Extreme caution, therefore, is required in handling both the cylinder and its contents.
2. All compressed gas cylinders must be legibly marked to properly identify their contents. Cylinders must be hydro tested as appropriate.
3. Hand trucks, with safety chains fastened, are to be used to transport cylinders about the laboratory.
4. Cylinders are not to be hoisted by electromagnets or with rope or chain slings. Cradles or special stands for that purpose are to be used.
5. Compressed flammable gas cylinders must be kept away from energized electrical apparatus.
6. Cylinders must not be allowed to stand in the direct rays of the sun, near a radiator, or in any other location where they may be subjected to elevated temperatures greater than 125°F.
7. The cylinder cap (for protection of the cylinder valve) must always be in place except when the cylinder is in use or is connected for use.
8. Cylinders must always be mounted in an upright position for use, and properly supported to prevent the possibility of a fall that might damage the cylinder body or valve. Suitable support can be had by anchoring the cylinder to the wall, bench or equipment frame with a chain, clamp or strap.
9. Cylinders of compressed gases are not to be used without a suitable pressure reducing regulator installed between the cylinder valve and the equipment to be supplied with gas. Regulators are to be used only with the gases for which they are specifically designed and intended.

10. All oxygen cylinders, valves, coupling, hoses, regulators, gauges and apparatus must be kept free of oil or grease at all times. In addition, oxygen gauges and regulators are to be marked "use no oil" All lines and fittings are to be cleaned according to standards prior to putting in service.
11. The threads on regulators or other unions must correspond with those on the cylinder valve outlet. Connections must not be forced that do not readily fit and adapters are not to be used.
12. Hose colors for use with compressed gases should be as follows:
    a. Red for flammable gases
    b. Green for oxygen
    c. Black for air
    d. Blue for inert gas
13. Know what gas is in a cylinder before opening the valve. If it is flammable, toxic or hazardous in some other way, all suitable precautions must be taken to protect the life or health.
14. Always open cylinder valves slowly. If a valve cannot be opened by hand with the hand wheel, key or special wrench provided, the cylinder shall be returned to the supplier.
15. When in use, the cylinder valve shall always be in the full open position. The flow of gas shall be controlled by the regulator and never by "pinching" the cylinder valve.
16. Compressed gases must not be transferred from one cylinder to another (except breathing air and then only with special transfer equipment).
17. Oxygen must never be permitted to strike oily clothes, greasy gloves oily containers or the like.
18. Cylinder valves shall always be closed when the gas is not being used. Pressure shall also be bled off regulators and gauges at such times. Cylinder valves are to be closed:
    a. When work is finished.
    b. When cylinder is moved.
    c. When cylinder is empty.
19. Empty cylinders are to be plainly marked “EMPTY” or “MT” and are to have the valve closed and the protective cap in place.
20. Even when empty, a cylinder may contain from 200 to 500 pounds of pressure, and therefore still may represent the normal hazards of a high pressure vessel.
21. Cylinder storage areas must be plainly marked with signs identifying their contents and with appropriate warning signs.
22. No more than 2,000 cubic feet or 300 pounds of combustible gas in cylinders are to be stored in any single building.
23. Cylinders must never be used for rollers or supports.
24. All compressed gas cylinders are to be stored:
    a. Upright - with the valve end up. (Does not apply to field sample cylinders.)
    b. With discharge valve closed.
    c. With protective valve cover screwed on, when applicable, hand tight.
    d. Secured against falling over.
    e. Oxygen cylinders separated from combustible gas cylinders by a minimum of 20 feet or by a 5 foot high barrier with at least an hour fire rating.
    f. Empty cylinders marked EMPTY or MT must be separated from full cylinders.
    g. Away from heat sources.

h. In well-ventilated and dry spaces.
i. At least 20 feet away from highly combustible materials such as oil or packing material.
j. In an assigned place away from elevators, stairs or gangways.
k. In places not subject to falling, being knocked over or being tampered with by unauthorized persons.
l. Cylinders should be segregated according to chemical compatibility as follows: DO NOT MIX IN STORAGE AREAS!!

(1) Flammables
(2) Reducing Agents
(3) Corrosives
(4) Organic Peroxides
(5) Oxidizers
(6) Explosives
(7) Radioactive
(8) Poisons
(9) Pesticides

9.3 Gas Sampling Procedure for HC and/or Sulfur Analysis

This procedure informs engineers and managers about the techniques that field technicians use for collecting samples of natural gas or gaseous products in the field. This is a recommended procedure for obtaining field gas samples. This discussion only covers the method commonly used to obtain natural gas and most gaseous products, referred to as the "trap & purge" procedure. It is critical to understand that all "accurate" analyses begin with accurate sampling and sample handling after they are obtained. How a sample is taken, and how it is handled prior to analysis, is essential in an accurate analysis of HCs and sulfur compounds. The trap and purge method is considered one of the most widely utilized procedures for sampling gas products in the field, along pipelines, or in gas processing facilities.

This procedure is only to be used as a guideline of individuals sampling at pressurized natural gas sites with light HCs. This method does not cover sampling procedures for obtaining atmospheric or negative pressure, samples. This procedure should only be used for sampling gases above 15 pounds per square inch gauge (psig). Also, sampling "HC wet" gases, with BTU values above 1100, should only be performed with a line probe and separator, in accordance to GPA article 2166 methodology.

HC wet gases have increased amounts of Propane plus HCs that can condense out in the sampling cylinder, yielding erroneous results. Sampling of these gases should only be performed through a sampling manifold or sample separator, which allows condensable (or free) liquid HCs to be retained prior to entry in the sampling cylinder. Entrained liquids are the chief cause of obtaining a non-representative, or inaccurate, sample for analysis. A "dry" natural gas is defined as one which does not form condensate upon cooling by a rapid expansion from source pressure to atmospheric, or any intermediate pressure.

Equipment For Sampling Natural Gas For HC & Sulfur Analysis

HC Analysis Sampling Manifold - A high pressure rated sampling transfer line made of stainless steel, or other flexible material, which is non-reactive to the product being sampled. While stainless steel is preferred for pressures above 1000 psig, high-pressure rubber hoses can be used for obtaining natural gas samples. The manifold should have a length of between 1 to 5 feet for flexibility, and a diameter of ¼", or less, and should be equipped with a

control valve, a vent valve, and pressure gauge to assure maximum sample cylinder pressure of 1800 psig is not exceeded.

Sampling Cylinders - Use DOT approved metal cylinders of a type, which insures maximum safety, and are corrosion-resistant to the product being sampled. For HC analysis sampling, it is not necessary to use Teflon lined, or treated steel (Sulfinert) cylinders. Those cylinders are utilized when sampling natural gas for sulfur compounds. Standard stainless steel (304 or 316) or aluminum cylinders, rated to maximum of 1800 psig, should be adequate for natural gas sampling when sulfur testing is not required. When sampling is completed, all cylinders should have steel end caps placed securely on each valve to prevent loss during transit. All sampling cylinders should be double valved (one at each end) and pressure tested to 1200 psig prior to use, to assure there are no leaks and that the valves stems seal securely. All cylinders should have a pressure relief disc at one end when sampling gaseous products over 1000 psig. If the gas source contains a significant amount of CO_2 (over 10%), or H_2S (over 1%), the cylinder should either be Teflon lined or treated steel, to prevent reactivity with the metal walls of the cylinder. This reactivity, or passivation, can results in a loss of components during storage, yielding inaccurate results. All sampling cylinders should be dry and free of any residues from prior sampling.

Sulfur Analysis Sampling Manifold - As discussed above, a high pressure rated, sampling transfer line made of treated stainless steel. This sampling manifold must be either Teflon coated or treated in such a manner as to prevent sulfur passivation during sampling. Standard stainless steel, or rubber, manifolds should not be utilized when sampling natural gas products for Sulfur analyses. H_2S will react immediately with stainless or non-treated steel surfaces, resulting in lost components through passivation. Always check cylinders, valves, and manifolds to assure they are coated in some manner as to prevent sulfur absorption. The sampling manifold should be as short as necessary to obtain the sample from the sampling source. The manifold should also contain a vent valve and shutoff valve, which are coated to prevent absorption.

Cooling Coils - When sampling natural gas streams for sulfur analysis, it is often necessary to utilize a cooling coil to reduce the temperature of the gas before it enters the cylinder. Quite often, gases from desulfurization beds are in excess of 500° F, which is hot enough to damage or disable a treated steel surface or Teflon coating, not to mention the Teflon valve seats, which can melt above 350° F. The cooling coil should be fashioned from treated (Sulfinert) or glass-lined stainless steel tubing to prevent loss or damage to equipment and sulfur components to be tested. The coil should be made of ¼" or ½" tubing, approximately 30 feet long and coiled to a diameter of roughly 8 to 10 inches. The coil is attached to the high temperature sample point and submerged in a pail of cold water when sampling. Gas from the sample point is slowly moved through the coil, allowed to cool to below 200° F, before entering the sampling cylinder. The coil should include a shutoff valve on the sample source end of the line and also one on the sample cylinder end. NOTE: These cooling coils can become very hot if the gas moves through them too quickly. The shutoff valves can also be extremely hot. Always use the proper safety gloves and eyewear when sampling these hot gases.

Sampling Cylinders - All sample cylinders used for sampling natural gas which will be analyzed for sulfur compounds MUST be either treated stainless steel (Sulfinert brand) or Teflon lined. Sampling cylinders should be pressure rated to 1800 psig and DOT approved for transit. All cylinders used in sampling natural gas products for Sulfur testing should be subjected to a "passivation" test, prior to use. This procedure requires the analyst or field technician to submit a calibration mixture of various sulfur compounds to each cylinder to be used. The calibration mixture is allowed to sit (or react) with the cylinder walls for a minimum of 24 hours. At the end of this period, the contents of the cylinder are tested and the remaining sulfur compounds are compared to the original mixture. If the H_2S, or any of the Sulfur compounds, are reduced in concentration after 24 hours, the cylinders should not be used

for sampling. A "good" treated steel or Teflon lined cylinder will not lose more than 0.5 % in 24 hours, if any at all. Likewise, all cylinders should have adequate valve on both ends, which also pass a 24-hour passivation test. These valves are often Teflon coated, or treated steel, which can be damaged by high temperatures from desulfurization treater outlets. Knowledge of the sample points will help prevent these soft seats from damage. The temperature of the gas being sampled should be checked prior to cylinder entry.

Soap Solution & Safety Gear – A soapy water solution should be available at the time of sampling, to check the cylinder and valves for leaks. A1% soap in water solution is sprayed around all applicable valves and outlets to assure the cylinders do not leak off during transit. Simply spray a small amount of the solution over the valves and valve ends. If bubbles are visible, then the cylinder valve (or threads) is leaking. Even though valves and cylinders are pressure checked before use, it is possible to have particulate or damaged coatings lodge in the valve stem, causing the cylinder valves to fail when tightened. Do not attempt to over tighten valves with wrenches to stop leaks. It has also been observed that high temperature gases (even those which have cooled down in a coil prior to sampling) can melt the soft Teflon valve seats and cause them to leak, despite tightening. If the soap solution bubbles after sampling, replace the cylinder. In addition, always wear the appropriate safety gear, including gloves, eyewear, and FRC, when sampling natural gas. It is always possible for sampling cylinders and sample manifolds to rupture during high pressure sampling. Cylinders equipped with pressure relief (rupture) discs can also become a source of release when sampling high-pressure gases. Also, FRC is essential when sampling flammable or explosive gases. Avoid sampling in wool, or synthetic blend clothing materials, as they will build up static electricity and could provide a source of ignition when sampling HC gases.

SAMPLING METHOD FOR NATURAL GAS PRODUCTS – TRAP & PURGE

- Prior to sampling, examine the outlet valve of the sample point. Be sure that it is free of particulate, and any condensed or accumulated liquids. If necessary, clean the valve with a steel wire brush to remove dirt, Iron filings, and old Teflon tape. Wipe around threads with clean, dry cloth. Make sure to exam the valve carefully for stress fractures, worn seals, or anything that might impede obtaining a good, clean sample. Old valves can break during sampling and those exposed to H_2S environments may be weakened over time. If necessary, replace valve before attaching sampling hose or manifold.
- Place a small piece of Teflon tape around the inlet threads of sampling manifold or hose. Carefully attach sampling manifold to the sample source. Record the source pressure before the source valve is opened to flow gas. If the pressure is above 1500 psig, or 250° F, do not attempt to obtain the sample. Make the necessary adjustments (i.e. cooling coils, partial pressure regulator) before attempting to sample. If the sample source pressure is below 1500 psig and the temperature of the gas is less than 250° F, then the sample cylinder may be attached to the manifold or hose. Teflon tape should be used to seal all threaded connections on the manifold or hose, and cylinders, before sampling
- With the sampling cylinder attached to the manifold (all valves should be closed at this point), carefully open the gas from the sample source, allowing it to fill up the manifold to source pressure. Slowly open the manifold vent valve and allow the source gas to purge through the manifold, venting the effluent to atmosphere. Continue flowing through the manifold until any precipitated liquids have passed. If intermittent condensed liquids are visually noted from the sample source through the manifold, a small separator may be required to drop them out. The cylinder should not be opened to admit the gas sample until there is a homogenous, dry gas stream through the manifold. Continue flowing dry gas from the sample source through the manifold for 30 to 60 seconds. NOTE: Freezing (below 32° F) ambient temperatures outside during sampling can cause hot or warm process and treater gases to cool rapidly, causing condensable HCs to fallout in the manifold. These droplets of HC liquids must be removed before

sampling. If moisture or HC droplets continue to coming through the manifold, a separator may need to be installed ahead of the manifold. Historical data of the sample source may yield a dew point of the gas stream above the ambient temperatures outside. If this occurs, then the condensable components of the gas stream may continue to form droplets while sampling, yielding inaccurate results.

- After purging sample gas from the source through the manifold, close the vent valve and allow the manifold to fill to source (line) pressure. Carefully open the sample cylinder valve attached to the manifold and slowly allow the cylinder to fill up with sample until it equilibrates to line pressure. Close the valve to the sample cylinder, trapping the sample gas inside. Slowly open the outlet valve on the sample cylinder and purge the contents of the cylinder to atmosphere. Close the outlet valve and slowly open the cylinder valve attached to the manifold and fill the cylinder with source gas again. Close the manifold valve and purge (vent) the contents of the cylinder again to atmosphere. These steps are repeated based on the line pressure:

Table 9-3 Sample Collection Purge Cycle Requirements

Gas Pressure in Container (psig)	Number of Purge Cycles
15 – 30	13
30 – 60	8
60 – 90	6
90 – 150	5
150 – 500	4
Greater than 500	3

Once the appropriate amount of trap and purge cycles have been performed, the final volume is trapped in the cylinder and both valves of the sample cylinder securely closed at each end. Close the source pressure valve and bleed the pressure off the manifold by slowly opening the vent valve. After all of the pressure is off, disconnect the sample cylinder from the manifold. Make sure to obtain all operating data from the sample source, such as temperature, pressure, and flow rate, to include on the sample tag. Spray a small amount of soap solution around the valve's stem and threads to check for leaks after sampling. If the valves show any sign of leaking, the sample should be taken again in a different cylinder. Wipe off any excess soap water and place a small amount of Teflon tape over the threads of both cylinder valves. Place end caps over valves and secure gently with wrench. Attach the sample tag, with all pertinent sample location information, on the cylinder

10. Metering and Calibration to Ensure Accurate Determination of Volume And Quality

Regardless of the type of gas sales purchase agreement, AGE and any future supplier of natural gas in Afghanistan, will need to have a robust metering and calibration program. Supply by the gas company and resultant usage by the customer must be accurately measured by both parties, and discrepancies reconciled with transfer points clearly delineated. Inaccurate metering and corresponding loss of revenue directly affects the bottom line in a gas company financials. Small inaccuracies over time quickly add up to hundreds of thousands of dollars that cannot be recovered.

In gas processing, metering and calibration is typically geared to process control and measurement of process variables, but the same fundamentals of QA/QC apply when metering (and calibrating) delivery meters and

recorders. Dependent upon the conditions and the particular control systems, the process engineer that designs the plant will specify various types of sensors. A list of each of the types of sensors for several process variables follows:

Level Sensors

- Gauge glass
- Chain and tape float gauges
- Lever and shaft float gauges
- Displacer level measuring device
- Head-pressure level gauges
- Electrical type level gauges and switches
- Capacitance probes
- Other methods include ultra transducer (UT), viscosity, expansion/contraction, radiation

Temperature

- Thermocouples
- Various types of thermometers

Flow

- UT
- Turbine
- Positive displacement
- Pressure differential-Orifice meters

The intent is not to go into detail for each of the variables, but rather to demonstrate the level of complexity and the importance of measurement to the complete natural gas process. Once the processes are measured, the outputs of each of the instruments must be converted to a form recognized by the particular processing plant control system. Although another over simplification, the output of each of these measurement devices are converted to various types of signals (pneumatic, electrical, etc.) and then transmitted to a central control system where various logic loops ensure safe and efficient operations.

10.1 Sampling

Recording of process variables is important for troubleshooting and performance of trend analysis. Like the individual process sensors, there are various types of recorders dependent upon function. These recorders generally record a variable versus time (gas flow rate/12 hour period, for example) but also can be used to plot one variable against another. Closely related to recording of data are the indicators that are located throughout a plant. Indicators (electrical, analog, or digital) provide direct feedback to the operator at various points in the process and provide real time measurement of process variables.

10.2 Calibration program

The processing plant control system is heavily dependent upon accurate process variable measurement. Although calibration methods and periodicity varies for each type of sensor, indicator, recorder, etc. a fundamental task in the execution of QA/QC is the establishment and adherence to a calibration program. Instruments that require

calibration are tracked by calibration date and sometimes standard error. Periodic calibration becomes a component of scheduled maintenance in order to ensure that the highest level of operational efficiency is maintained.

11. Process Optimization

The world energy markets are entering a phase of rapid changes in many areas. Economic constraints, revenue generation, political and legal requirements as well as exploding costs for operating resources put pressure on energy producers, NGPP operators, power plant operators and technology providers to optimize existing plants. The economic goal of gas plant optimization is to utilize all available plant information to determine the set of economically optimum operating conditions. To achieve this goal usually means finding optimum gas processing operating conditions or implementing innovative or not originally designed technologies in the NGPPs.

11.1 Approaches to Finding Optimum Operating Conditions

Different optimization approaches are typical:

- Increasing efficiency of existing processing systems by reducing system losses
- Increasing gas throughput by evaluating the dynamics of reservoir, gas well, gas gathering and gas process plants pressure drops
- Increasing gas capacity and gas revenue by additions of specific equipment
- Increasing NGL recovery of NGL products like propane and butane
- Increasing equipment reliability and operability
- Reduction of maintenance costs due to minimization of thermal and mechanical plant operation stress and preventing of corrosion, coating and fouling
- Retrofit and refurbishment of equipment
- Improvement of insufficient control performances
- Meeting imposed air emission regulations by reducing emissions (carbon monoxide, CO_2, nitrogen oxide) in the least operating cost fashion
- Introduction of new process control and equipment technologies
- Reducing fuel costs

11.2 How to Optimize NGPPs

Optimization Projects - Team Set-up and Goals

Optimization projects normally start with the process design engineer, operating manager, or maintenance manager. Optimization projects should be structured to have well defined milestones and should have a project sponsor (operations manager) to ensure the management and control of ongoing activities. The optimization project effort should also include a multi-disciplinary team of personnel, all with the same goal. Typical optimization project phases are:

- Data acquisition
- Maintenance costs
- Operating costs
- Gas savings and revenue enhancement

- Process simulation & modeling
- Process analyses
- Economic analysis
- Operating personnel buy-in to new operating conditions or equipment

Optimization Projects - Project steps

Once a project is initiated and the goal of the project set, the following steps normally occur:

- Compilation and determination of plant design data and process values
- Comparison plant design data vs. plant operation data
- Basic mass and energy balances
- Process simulation modeling of the relevant systems and processes
- Verify simulation results against real operation
- Analysis of process values and comparison with simulation results
- Validation of process values
- Benchmarking: determination of plant and unit efficiencies and process benchmarks
- Weak point analyses
- Localization and identification of equipment malfunctions
- Determination of optimal plant operation points
- Development of optimized system operating procedures and conditions
- Optimized control instrumentation and/or automation configuration and setup
- Equipment retrofit concepts or equipment upgrades for reliability

Optimization Projects - Results and Benefits

- Results - After the optimization project is completed, the project team provides operating management with verified recommendations for process optimization:
    - Optimized process system operating points and procedures
    - Optimized process controller configuration
    - Redesign and retrofit-concepts
    - Start of a small project to design, order, and construct new equipment
- Benefits - Typical benefits are:
    - Better operational reliability, operability, and flexibility
    - Lower maintenance costs
    - Increased throughput or capacity and revenue
    - Improved dynamic behavior of subsystems or entire plants

11.3 Optimization Guidelines for Dehydration, Sweetening, and NGL Recovery

Process Design Engineer

The Process design engineer uses gas plant process simulation programs to determine heat and material balances for gas processing system optimization. The process simulations provide preliminary sizing of process vessels, scrubbers, compressors, heat exchangers, pumps, and distillation or fractionation columns. Process simulation programs are Aspen HYSYS, ProMax with TSweet & ProSim by Bryan Research& Engineering, PetroSim5, CHEMCAD, Pro/II, Simsci and JPro. Commercial process simulation software, process simulators can be licensed long-term or short-term.

Process Design Tools - Thermodynamic Simulator description

Full utilization and proper use of a process simulator provides the process design engineer a powerful tool to develop the most cost effective and efficient design for a processing plant. Similarly, simulators can be used by both the plant engineer and operator to increase productivity and efficiency within an operating plant. However, process simulators are tools and not magic black boxes that provide every answer. Designers and operators alike should expend the effort necessary to learn and understand the capabilities of their simulator of choice and use the simulator on a routine basis to maintain familiarity with the program.

One simulator ProMax, is a powerful and versatile stream based process simulation package. It is used by engineers around the world to design and optimize gas processing, refining, and chemical facilities. ProMax contains over 50 thermodynamic package combinations, over 2300 components, OLE Automation tie-ins, specifiers, solvers, crude oil characterization and Microsoft Excel® spreadsheet embedding. ProMax offers all of this with amazing flexibility and ease of use. ProMax is built on technology proven over the past 30 years. Its predecessors, TSWEET and PROSIM, are widely recognized by the industry for their accuracy and efficiency. With ProMax, BR&E has continued to build on its reputation as a leading provider of simulation technology by focusing on several key processes. These processes include amine sweetening, glycol dehydration, equipment rating/sizing, crude oil refining, LPG/NGL recovery & fractionation as well as caustic treating.

Before purchasing a simulation program, it is recommended that a thorough search of available programs be made to make sure that the program purchased is the best value for the required applications.

12. Environmental Issues with NGPPs

12.1 Main Environmental Issues

Potential environmental aspects associated with natural gas processing include the following:

- Air emissions
  - Hazardous Air Pollutants – Can cause serious health problems
    - Benzene, toluene, xylene, formaldehyde
  - Criteria Pollutants – National standards to protect health and welfare
    - PM10 (Dust), PM2.5, Carbon monoxide, Sulfur dioxide, ozone, nitrogen oxides
  - Volatile Organic Compounds – Fugitive emissions contribute to ozone formation
    - Propane, butane, pentane, hexanes, octanes, etc.
  - Greenhouse Gases – Contribute to climate change
    - CO_2, methane, nitrous oxide
- Wastewater
  - Produced water from oil and gas wells
  - Produced water from gas compression
  - Produced water from gas treating processes
  - Rain water run off
  - Hazardous materials
  - Liquid spills to ground and into ground water run-off
  - Liquid Oil and HC spills
- Wastes
- Facility waste from operations
- Oily contaminated waste from operations
- Heavy non-volatile produced wastes such as elemental sulfur
- Noise
  - Noise associated with occupational health
  - Noise extending to offsite communities

Operating Company Environmental Policy

The OPCO's environmental policy should include a commitment to governmental regulatory compliance, continual improvement and pollution prevention. The company should incorporate into its operating processes an environmental management system (EMS). The EMS includes an assurance process which is geared to continuous improvement and adjustment to ensure the best possible environmental performance. The EMS also addresses the socio-economic mitigation and monitoring issues applicable to the project.

Environmental performance is one of the key performance parameters of the OPCO operations throughout all of its many phases. Environmental expectations should be developed and adopted by OPCO management. The environmental expectations should be described in policy statements and a specific document. The OPCO corporate standard is implemented at a local level through the formulation of an HSE policy that is Operating Entity and location specific both in terms of the nature of the operations to be conducted and in terms of local conditions, customs and legislation.

During operations of gas processing plants and facilities, the OPCO should embody all corporate, national, and international requirements in a comprehensive environmental management plan (EMP). OPCO's contractors will be required to align their own EMPs and implement environmental procedures for their specific work activities. During operations, the HSE Policy will be implemented through a range of instruments including environmental plans, guidelines, procedures and instructions. These instruments will form part of the OPCO's existing EMS.

Environmental management follows a hierarchical structure as shown in the figure below. The philosophy sets the requirement for policy that in turn sets the requirements for the management system to be developed. The management system requires a management plan to be implemented for site-specific operations. The plan is dependent upon a number of components that ensure environmental issues are managed in a practical sense on a day-to-day basis.

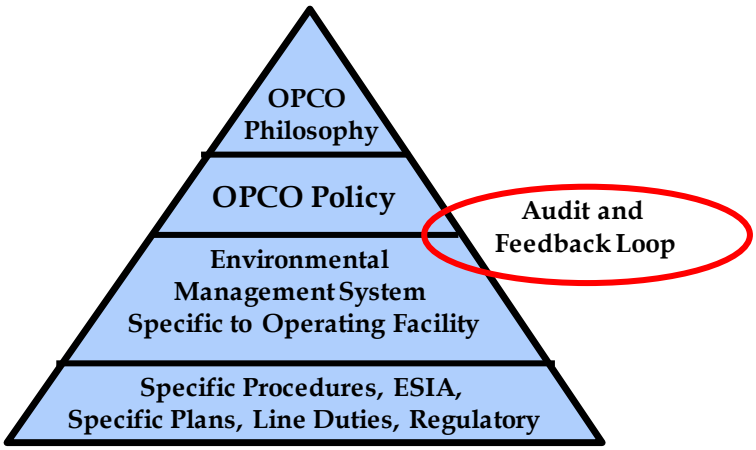

Figure 12-1 Environmental Management Compliance Pyramid

An OPCO should allocate the necessary resources to implement the EMS. There are many synergies and similar environmental issues between different operating facilities and those issues should be dealt with in a similar fashion. Therefore there is a need for a central environmental assurance function (environmental manager) to cover all of the OPCO's various operating activities. However, the delivery of each plant's site-specific environmental commitments will remain the responsibility of the individual on-site operation teams.

The responsibilities of the central environmental assurance function should include;

- Developing environmental strategies for the OPCO operations (e.g. for produced water, waste compliance monitoring, etc.);
- Ensuring consistency in EMS implementation;
- Alignment between OPCO corporate and the OPCO operating entity standards and expectations; and,
- Ongoing review and advice on environmental improvement and performance throughout all ACG Projects.

The OPCO EMS is should be structured to address the following elements

- Identification of significant environmental impacts
- Identifying legal and other requirements
- Establishing objectives and targets

- Establishing environmental management programs
- Establishing environmental improvement plans
- Defining organization and responsibilities
- Operational control
- Control of contractors and suppliers
    - Document control
    - Records
    - Monitoring and measurement
    - Emergency preparedness and response
    - Training, awareness and competence
    - Communication
    - Non-conformances, corrective and preventative actions
    - Audit
    - Continuous improvement

13. Understanding Gas Processing Value Chain

As noted earlier, the gas processing component of the complete value chain is where the gas is processed in order to meet mandated quality standards. In comparison to the miles and miles of transmission, distribution and gathering lines, the processing sector comprises a relatively small footprint. Like all components of the sector, gas producers must control cost whether they are a standalone midstream company or a division of a larger gas company. The cost to produce gas is a component of the overall gas price and sub optimized processing costs will generally not be recovered (i.e. the processing plant will be operating at a loss).

The cost of gas processing can be distilled down to a set of fixed and variable costs. Fixed costs include scheduled maintenance, equipment capitalization, labor, consumables, auxiliary electricity for lights, monitoring systems, etc. Variable costs that change as a function of processing volume include chemical usage, utility gas consumption, and unscheduled maintenance (repairs). An important variable to consider, especially in variable cost control, is the level of process optimization. A plant dedicated to QA/QC and strict adherence to standards results in high levels of efficiency and therefore cost control. Assuming that profit margins are slim, especially in the processing arena, the dedication to QA/QC can be the difference between operating at a profit or a loss.

13.1 Utility gas consumption

One particular variable cost that warrants a more detailed discussion is utility or pneumatic instrument gas which is high pressure natural gas that is used for process control in the natural gas industry. Typical process control applications include flow rate, temperature and pressure regulation. Liquid level control also utilizes pneumatic instrument gas to send signals to open and close pneumatically operated dump valves. The greater the amount of gas processed and the amount the complexity of the control system all contribute to the consumption of instrument gas. This gas is treated natural gas that does not go to sales (yet costs money to produce) and it is a large driver of operating costs as mentioned above. To put the cost (and deleterious effect of poor process control) of operating a processing plant, a common rule of thumb for instrument gas consumption is on the order of 3-5% of the total gas processed. At large production volumes, this can be a considerable expense.

13.2 Processing component of natural gas pricing

Gas plant economics are fairly complex especially when the producer and the processor are from different companies. Of course, even if they are in the same company, the processing expenditure drives overall cost which dependent on the market, may be independent of sales price. Afghanistan, given its developing gas sector, can look at pricing gas based on the cost-plus model otherwise known as the cost to produce. The caveat here is that if the processing cost is skewed due to sub optimal process controls and inadequate QA/QC, the cost to produce will increase but the increase in gas pricing may not be directly proportional. The obvious result is a reduction in the profit margin and stymied natural gas sector growth in the long-term.

14. Concluding Comments

This report focuses on the best practices for quality assurance and quality control for natural gas processing plants and pipelines as may be applied to the existing natural gas infrastructure in Afghanistan. Understanding and implementation of the concepts addressed herein will be vital as the natural gas consumer base increases and in support of future development of transportation and processing facilities for natural gas in Afghanistan.

The report details types of processing already in operation in Afghanistan by AGE as well as comparisons of international standards and best practices for design, construction and operation of processing facilities and pipelines. Obviously, a single report cannot be all-inclusive, however; the emphasis on safety is intended to highlight this most important concept. Safety practices must be ingrained in the corporate culture and incorporated into every activity undertaken in the natural gas sector. Without complete alignment of the addressed safety concepts with operations and maintenance, adherence to best practices will be impossible.

In the past few years, AGE has made tremendous improvements in its practices related to material procurement, construction practices and safety. There is still a long way to go to achieve “best in class” status. However, the best practices and QA/QC procedures included in this report will inform AGE’s continuous improvement process and ultimately result in its recognition as a reliable, safe provider of natural gas to existing and future industrial customers in Afghanistan.

Appendix

Information contained in this report is based on the references as follow in this section. All documents referenced have been obtained from the public domain and are generally available for downloading from the internet. Additional information was included in this report based on the knowledge and experience of the authors.

REFERENCES

Dehydration and Treating Equipment

- Energy Information Administration, Office of Oil and Gas January 2006 web posting "Natural Gas Processing: The Crucial Link Between Natural Gas Production and its Transportation to Market"
- KLM Technology Group web posting, January 2011 "Separator Vessel Selection and Sizing (Engineering Design Guideline)"
- API Specification 12J "Specification for Oil and Gas Separators"
- Wikipedia web post "Hydrogen Sulfide"
- Canadian Union of Public Employees "Hydrogen Sulfide"
- Safety Directory.com, web post, August 2004 " H_2S Safety Fact Sheet"
- Occupational Safety and Health Administration, "OSHA Quick Card-Hydrogen Sulfide (H_2S)"
- Occupational Safety and Health Administration, "Safety and Health Topics – Hydrogen Sulfide"
- NGPSA Engineering Data Book
- Fundamentals of Oil and Gas Separation, C. Richard Sivalls 1977
- Glycol Dehydration Manual, C. Richard Sivalls 1976
- Fundamentals of Gas Treating Manual for Design of Gas Treaters, V. Wayne Jones, 1978
- Philosophies of Safety in Sour Gas Processing, R.G. Archibald, 1976
- Generon Innovative Gas Systems web posting, Triethylene Glycol (TEG) Dehydration of Natural Gas
- ProSim web posting Natural Gas Dehydration Unit with TEG process simumation
- Exterran web posting Glycol Dehydration Unit
- Wikipedia, Claus Process
- Miswaco Services, web posting, Safe, effective and permanent neutralization of hazardous hydrogen sulfide gas.
- ASME B31.8 – Gas Transmission and Distribution Piping

Codes and Standards

- DOT – Tile 49 CFR Part 192 Transportation of Natural and other Gas by Pipeline – Minimum Federal Safety Standards
- Canada – CSAZ 662 – Oil and Gas Pipeline System Code
- AS2885 Australian Standard: Pipeline – Gas and Liquid, Part 1 Design and Construction
- British Standard and European Standard – "BS EN 14161 Petroleum and Natural Gas Industries-Pipeline Transportation Systems"
- ISO 13623 Petroleum and Natural Gas Industries – Pipeline Transportation Systems
- Decarboni.se web posting, Pipeline Design Codes and Standards
- Accufacts, Inc. web posting, Best International Pipeline Standard
- Wikipedia, Piping

- Wikipedia, GOST(Russian Standards)
- Pipelines International web posting, Harmonization of Pipeline Standards Throughout ISO

Process

- *Hydrocarbon Processing, Amine plant troubleshooting and optimization* by R.G.F. Abry and R.S. DuPart, April 1995
- *Optimization of Amie Sweetening Units*, by Ken Lunsford and Jerry Bullin, 1996
- *Natural Gas Processing Principles and Technology Parts 1 & 2*, by Dr, A.H. Younger, 2004
- *Oil and Gas Production Handbook*, by Havard Devold, 2006
- *Engineering Data Book, Gas Processors Suppliers Association*, Twelfth Edition, 2004
- *Fundamentals of Natural Gas Processing* by Arthur Hidnay and William Parrish, 2006
- *An Evaluation of General "Rules of Thumb" in Amine Sweetening Unit Design and Operation*, by Luke Addington and Chris Ness
- *Using Process Simulators will Make Your Plant More Productive and Efficient* by W.G. Brown, Leonard Ochs and JW Varner
- *Optimization of Triethylene Glycol (TEG) Dehydration in a Natural Gas Processing Plant* by Nmegbu Chukwuma Godwin Jacob
- *Pro Sim Plus Application Example: Gas Gathering System – Internet Posting*
- *Pro Sim Plus Application Example: Natural Gas Dehydration Unit– Internet Posting*
- *Pro Sim Plus Application Example: LPG Recovery Unit– Internet Posting*
- *Aspen-HYSYS Simulation of Natural Gas Processing Plant,* by Partho s. Roy and Ruhul Amin M., Journal of Chemical Engineering, December 2011

Environmental

- *The Gold Book, Surface Operating Standards and Guidelines for Oil and Gas Exploration and Development,* U.S. Bureau of Land Management, *2007*
- *Environmental, Health, and Safety Guidelines for Natural Gas*, The World Bank 2007
- *Air Resource BMPs.* U.S. Bureau of Land Management, 2011
- *Summary of Requirements for Process and Equip at Natural Gas Processing Plants,* U.S. Environmental Protection Agency, 2011
- *Air Emissions Modeling Advances for Oil and Gas Production Facilities.* By Barry L. Burr and Adam M. Georgeson

Safety

- *Contractor Expectations Manual for Environmental, Health, Safety, & Security,* Encana Corporation, 2014
- *Marathon Contractor Safety & Environmental Handbook,* Marathon Pipeline LLC, 2010
- *Health, Environment and Safety Handbook,* Occidental Oil & Gas Corporation, 2000
- *Health, Safety & Environmental Handbook,* DTC Energy Group, Inc. 12th edition
- *Construction Site Safety Handbook,* The Real Estate Developers Association of Hong Kong, 2005

- *Safety Guide-Small, Portable Oil & Gas Production Facilities: Recommended Solutions for Design and Operation*, Canadian Association of Petroleum Producers, 2014
- *Contractor Handbook,* Chevron, 2013
- *Hydrogen Sulfide in Industry,* Work Safe BC, 2010
- *Recommended Practice for Occupational Safety for Onshore Oil and Gas Production Operation, API Recommended Practice 74, First Edition Reaffirmed March 2007,* American Petroleum Institute