USAID | JORDAN
FROM THE AMERICAN PEOPLE

WATER REUSE AND ENVIRONMENTAL CONSERVATION PROJECT

CONTRACT NO. EDH–I–00–08–00024–00 ORDER NO. 04

ODOR AND PEST CONTROL OPTIONS FOR RUSSEIFAH LAGOON (AREA 4)

August 2014

August 2014

This document was produced for review by the United States Agency for International Development. It was prepared by AECOM.

WATER REUSE AND ENVIRONMENTAL CONSERVATION PROJECT

CONTRACT NO. EDH–I–00–08–00024–00 ORDER NO. 04

ODOR AND PEST CONTROL OPTIONS FOR RUSSEIFAH LAGOON (AREA 4)

August 2014

Submitted to:
USAID Jordan

Prepared by:
AECOM

DISCLAIMER:
The authors' views expressed in this document do not necessarily reflect the views of the United States Agency for International Development or the United States Government.

Table of Contents

1.0 INTRODUCTION 1
1.1 Scope of Work 1
1.2 Report Organization 1
2.0 SITE BACKGROUND 1
2.1 Location and Ownership 3
2.2 Previous Studies 4
2.3 Site History 5
2.4 Climate 7
2.5 Geology 7
2.6 Previous Geotechnical Investigations 8
2.6.1 Boreholes 8
2.6.2 Faults 10
2.7 Hydrology 10
2.7.1 Surface Water in Jordan 10
2.7.2 Hydrology of the Study Area 11
3.0 SITE ASSESSMENT 12
3.1 Site Description and Existing Conditions 12
3.1.1 Site Hydrology 13
3.1.2 Stormwater Infrastructure 20
3.2 Non-Stormwater Inflows 27
3.3 Water Quality 29
3.4 Other Site Issues 32
4.0 DEVELOPMENT OF ALTERNATIVES 33
4.1 Alternatives 34
4.2 Stormwater Management Alternatives 36
4.2.1 Detention 37
4.2.1.1 Pumping to Zarqa River 37
4.2.1.2 Discharge Water by Gravity to Zarqa River 38
4.2.1.3 Water Reuse 38
4.2.2 Dry Retention 39
4.2.2.1 Evaluation of Stormwater Management Alternatives 39
4.3 Alternatives to Address Contributing Factors 40
4.3.1 In Situ Lagoon Water Treatment by Mechanical Aerators 40
4.3.2 Diversion of Low-Flow Storm Water 40
4.3.3 Preliminary Treatment and Bioswale 41
4.3.2.1 Evaluation of Alternatives to Address Contributing Factors 44
4.4 Work Elements Common to All Alternatives 45
4.4.1 Rehabilitate the sanitary sewer drainage network in Hittin Camp 45

4.4.2 Replace Concrete End Wall Structures and Restore Slopes 45
4.4.3 Contigency Emergency Overflow Plan 46
4.4.4 Remove Sediments from Bottom of Lagoon 46
5.0 ECONOMIC ANALYSIS 47
6.0 CONCLUSIONS AND RECOMMENDATIONS 48
REFERENCES 50

APPENDIX A: DRAWINGS
APPENDIX B: SUGGESTED VEGETATION FOR THE BIOSWALE
APPENDIX C: COST ESTIMATE

List of Figures

Figure 2-1 Russeifah Site Areas 2
Figure 2-2 Lagoon during typical seasonal low water surface elevation at inlet to abandoned pumping station on 15 Aug 2013 3
Figure 2-3 General Site Location 4
Figure 2-4 Park amenities near the northwest corner of the site include access gate, paved pedestrian paths, and trees. The curved light pole shown in the upper right of the photo is missing its light fixture as a result of theft and vandalism 6
Figure 2-5 General Geological Map of the Project Area 8
Figure 2-6 Location of Boreholes North of Lagoon 9
Figure 2-7 Zarqa River and Basin 12
Figure 3-1 View of Area 4 (Lagoon and its Surrounding Land Use) 13
Figure 3-2 Stage-storage chart for the retention area 14
Figure 3-3 West double culvert discharging to Russeifah lagoon during high water event on 09 Jan 2013 15
Figure 3-4 Viewing south, the top of an almost completely submerged manhole structure is shown in the top-center of the photo of Russeifah lagoon during high water event on 09 Jan 2013 15
Figure 3-5 Lagoon water surface on 23 Aug 2012 16
Figure 3-6 Lagoon water surface on 05 Dec 2012 was estimated to be Approximately elevation = 664.9 m 16
Figure 3-7 Lagoon water surface on 03 Feb 2013 was estimated to be elevation = 667.23 m 16
Figure 3-8 Lagoon water surface on 03 Mar 2013 was estimated to be elevation = 665.9 m 17
Figure 3-9 Lagoon water surface on 03 Apr 2013 was estimated to be elevation = 665.1 m 17
Figure 3-10 Lagoon water surface on 15 Aug 2013 was estimated to be elevation = 664.4 m 17
Figure 3-11 Retention area stage-storage 18
Figure 3-12 Lagoon water surface elevations from 09 Jan 2013 to 15 Aug 2013 19
Figure 3-13 Lagoon water surface elevations from 09 Jan 2013 to 15 Aug 2013 20
Figure 3-14 Lagoon Culverts and Source of Inflow 21
Figure 3-15(a) & 3-15(b) Upstream end of South double culvert before (left) and after (right) debris removal by maintenance workers 22
Figure 3-16 Downstream end of south double culvert outlet revealing the two 900 mm diameter concrete pipes in a current condition of disrepair, including missing end wall, separated pipe joints, and substantial undermining of structural support for the culverts 22
Figure 3-17 Sewage pumping station serving Hitteen Refugee Camp lies within the Wadi Marka flood plain and is located nearby the lagoon just upstream of south double culvert. The dark green

patch of grass is a naturally-occurring bioswale resulting from routine discharge of wash water from equipment cleaning and an undetermined frequency of sewage overflows. 23
Figure 3-18 Wadi Marka viewing north from 4-box culvert bridge, showing Substantial dumping of solid waste and active garbage collection from dumpsters (photo dated 23 Oct 2012) 24
Figure 3-19 Wadi Marka 4-box culvert showing one culvert completely blocked and another partially blocked by solid waste material (photo dated 23 Oct 2012) 24
Figure 3-20 Indiscriminate littering and dumping in the Wadi Marka primary drainage channel is commonly accepted practice (photo upstream of 4-box culvert date 23 Oct 2013) 25
Figures 3-21(a) & 3-21(b) West double culvert before (left) and after (right) the 09 Jan 2013 storm event 25
Figure 3-22 Close-up view of west double culvert before the 09 Jan 2013 storm event showing partial structural failure, no structural foundation, and soil erosion under the pipe culverts. 26
Figure 3-23 Large floating mat of aquatic green vegetation in the lagoon before the Jan 2013 storm event (left) and a mat of dry and dead vegetation on the top of the “abandoned” sanitary sewer manhole located in the northeast corner of the lagoon after waters from the Jan 2013 storm event receded 27
Figure 3-24 Viewing east, raw sewage overflows a manhole cover and flows overland through trash-strewn vacant land towards the lagoon which is located just beyond the houses that can be seen in the middle-upper right of the photo. 28
Figure 3-25 Missing sewage manhole cover in Hiteen Camp, Russeifah 28
Figure 3-26 Views of municipal water draining along paved paths and roads within Hitteen Camp. 29
Figure 3-27 Sampling in Russeifah Lagoon 30
Figure 3-28 Location of Water Samples Obtained from the Lagoon 31
Figure 4-1 Lagoon covered by floating algae and duckweed interspersed with floating trash and debris detracts from the aesthetic beauty and contributes to sources of odors. 35
Figure 4-2 Schematic of a Dry Retention Facility 36
Figure 4-3 Schematic Diagram of the Proposed Bioswale 43
Figure 4-4 Photograph of a typical bioswale cross-section for stormwater management 44
Figure 4-5 Elevation o manhole structure 47

List of Tables

Table 2-1 Meteorological Parameters at the Study Area 7
Table 2-2 Summary of Boreholes Lithology 9
Table 2-3 Surface Water Basins in Jordan 10
Table 3-1 Precipitation at Amman (Marka) Airport 14
Table 3-2 West Culvert Sample Results Compared to JS 893:2006 31
Table 3-3 Result of Five Samples in Comparison to JS 893:2006 32
Table 3-4 Depths Measured Along Five Transects Across the Lagoon 32
Table 5-1 Planning-Level Implementation Cost Estimate 48

List of Acronyms

AAGS	Amman Airport Gage Station
Asl	Above sea level
BOD	Biological Oxygen Demand
COD	Chemical Oxygen Demand
FA	Feasibility Assessment
GAM	Greater Amman Municipality
GoJ	Government of Jordan
HDD	Horizontal Directional Drilling
HDPE	High Density Poly Ethylene
JPMC	Jordan Phosphate Mines Company
JS	Jordanian Standard
JVA	Jordan Valley Authority
KTD	King Talal Dam
MCM	Million Cubic Meters
MDB	Main Distribution Board
MoEnv	Ministry of Environment
MoMA	Ministry of Municipal Affairs
MWI	Ministry of Water and Irrigation
NRA	Natural Resources Authority
NWMP	National Water Master Plan
RM	Russeifah Municipality
RSCN	Royal Society for the Conservation of Nature
RSS	Royal Scientific Society
TSS	Total Suspended Solids
TTCC	Total Coliform Count
USAID	United States Agency for International Development
USEPA	United States Environment Program Agency
WAJ	Water Authority of Jordan

1.0 INTRODUCTION

This report is prepared as a sub-task of the USAID Jordan Water Reuse and Environmental Conservation Project (Project), which provides consulting engineering services to the Government of Jordan (GoJ) at specific targets consistent with USAID's Strategic Objective to achieve "Enhanced Integrated Water Resources Management."

Work on the project is authorized under Order Number 4 in accordance with USAID Contract Number EDH-I-00-08-00024-00 for Global Architect-Engineering Infrastructure Services, as issued to AECOM Technology Corporation (AECOM). The period of performance for this task order is five years, commencing 1 August 2010, with the estimated completion date of 30 July 2015.

The purpose of this report is to evaluate the feasibility of alternatives to mitigate the negative impact that the existing surface water impoundment (lagoon) in Russeifah is having on odors and pests.

1.1 Scope of Work

The scope of work for this report is to evaluate options to mitigate and control odor and other nuisances originating from the lagoon. The evaluation includes a detailed assessment of existing conditions at the lagoon and surrounding park area, known as Farah Park. The evaluation includes an economic analysis of the various remediation options.

1.2 Report Organization

Section 2 presents site background information, including climate, geology, hydrogeology and previous studies. Section 3 discusses observations of existing conditions and the sources of inflow to the lagoon, recaps relevant information from previous studies, and identifies site issues to be considered in the final design. Alternatives to mitigate odors and related nuisances are developed in Section 4. Costs used as a basis for economic feasibility analysis of alternatives are presented in Section 5. Alternatives are evaluated and an alternative is recommended in Section 6.

2.0 SITE BACKGROUND

The phosphate mining area within Russeifah was one of the largest mining areas in Jordan. Phosphate exploration and mining started in the 1930's; the Jordan Phosphate Mines Company (JPMC) was established in 1952 and was granted a concession area of approximately 13,500 dunums at Russeifah.

The southern part of the concession area, approximately 10,400 dunums, lies within the border of the Greater Amman Municipality (GAM), and the remaining 3,123 dunums are within the borders of Russeifah Municipality. Of the total concession area, approximately 2,720 dunums has been disturbed by mining activities. These disturbed areas were abandoned without restoration to their pre-existing condition.

Six areas identified for restoration are shown in Figure 2-1:

Area 1: Russeifah landfill
Area 2: Mining pit
Area 3: Phosphate ore pile
Area 4: Lagoon
Area 5: Tunnels
Area 6: Overburden piles

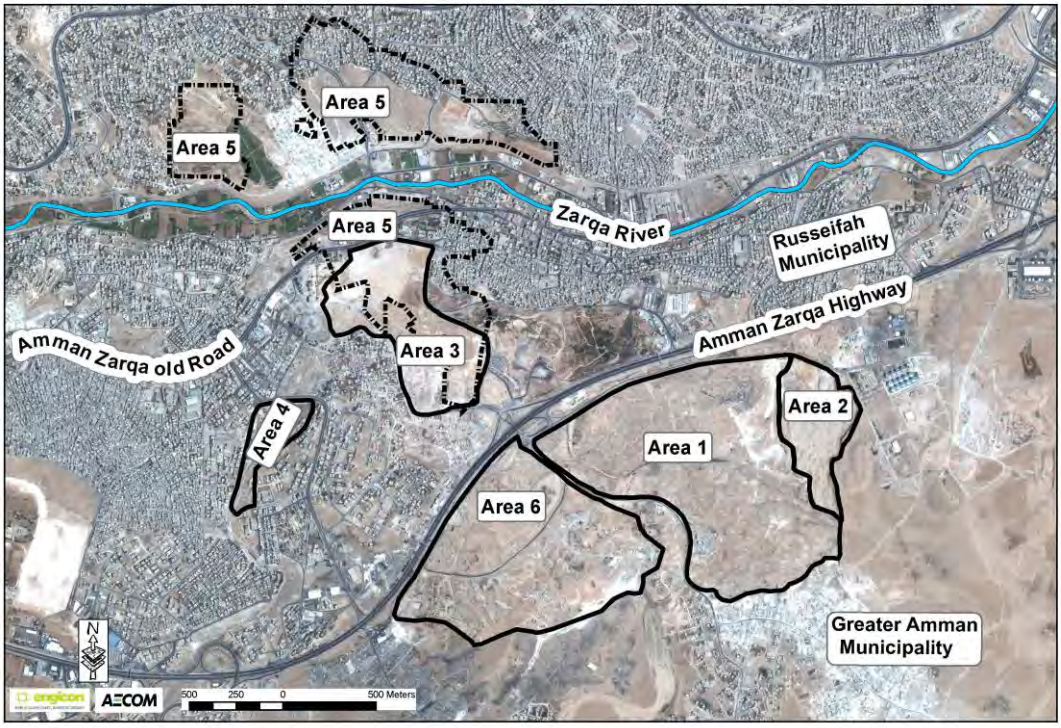

Figure 2-1: Russeifah Site Areas

This study addresses Area 4. The Russeifah Lagoon (Area 4), formerly known as the Pepsi Pond because of its proximity to a bottling plant that has since closed, was formed in the early 1960s as a result of phosphate mining in Russeifah. The natural water course of Wadi Marka was completely obstructed by the disposal of phosphate ore wash water and mine tailings. The resulting impoundment retains all water inflows because there is no way for water to leave the site, either by gravity or by pumping. Stormwater and sediments accumulated behind the dam created by the mining spoil material. Historically, the stormwater retention lagoon received inflows of industrial and domestic wastewaters. A recent view of the lagoon at a typical low water condition is shown in Figure 2-2.

Figure 2-2: Lagoon during typical seasonal low water surface elevation at inlet to abandoned pumping station on 15 Aug 2013.

2.1 Location and Ownership

The City of Russeifah is located in the Zarqa Governorate, 15 km northeast of Amman, situated in the middle of Jordan and north of the highway which connects Amman and Zarqa. The city is approximately 665 m above sea level, with an approximate latitude and longitude of 30.02°N and 36.05°E. The general location of the area can be seen in Figure 2-3.

Figure 2-3: General Site Location

Several entities are directly or indirectly involved in managing and/or governing the Russeifah phosphate mining area. These include: Greater Amman Municipality (GAM), Russeifah Municipality (RM), Ministry of Environment (MoEnv), and Jordan Phosphate Mines Company (JPMC). The main entity currently involved in governing the Lagoon is GAM.

In accordance to the Land Settlement Office of Russeifah, the Lagoon area lies on Plot number 193 owned by GAM, with an approximate area of 103,709 m^2.

2.2 Previous Studies

Several studies have been prepared previously for the Russeifah site. Of these, the following studies and reports were reviewed:

***The Russeifah Phosphate Mining Site Environmental Assessment, 2006,* Tolaymat T. (USEPA/USAID, 2006).** This report includes an Environmental Assessment and Remediation Plan. This report identifies the main source of odor as the anaerobic decomposition of organic matter. The suggested solution to the problem is raising the water level of the pond and installing two or three fountains. The fountains would provide the aeration needed to keep anaerobic decomposition in check and reduce the odor problem.

***Restoration Of Pepsi Pond Site in Russeifah, 2006 Conceptual Design Report* (MWI/JVA, 2006)**. This report was prepared by Engicon for Jordan Valley Authority (JVA). The report investigates potential solutions and evaluates alternatives for resolving the problem of water accumulation in the Pepsi pond referred to hereinafter as Lagoon. The recommended solution was to rehabilitate the badly-vandalized pumping station, provide sewer service to 35 houses, inspect, clean and repair broken sewers in the vicinity of the lagoon, implement strict monitoring and control of liquid and solid waste disposal in the upstream catchment areas, and add a security guard at the facility. To date, it is understood that sewer service was provided to the 35 houses; however, no other improvements were made.

The MWI/JVA report reported a previous attempt to improve the problems at the lagoon that failed:

> In 2002, the Ministry of Municipal Affairs completed a one million Dinar project to resolve the problem of water stagnation in the pond. In addition to the immediate measures of rehabilitating and landscaping the adjacent areas, submersible pumps, and a 16-inch, 1,700 meter pipeline were constructed for pumping floodwater during the winter [from the lagoon] to Wadi Zarqa. Unfortunately, the [completed] project did not operate since its construction because it was subject to theft and vandalism.

***Development of Phosphate Mining Concession Area in Russeifah, RSS, 1995* (RSS, 1995).** Prepared by the Royal Scientific Society (RSS), the report describes the current conditions at the mining concession area and analyzes possible future land uses of the area.

2.3 Site History

Phosphate ore was discovered in Russeifah at the beginning of the 20th century. Commercial extraction of phosphate ore began in 1934, when individuals and small companies hand-excavated the ore by “tunneling” along exposed phosphate seams. At the beginning of 1950s, Jordan Phosphate Mines Company (JPMC) was established and continued excavating the ore by tunneling until 1958. Phosphate extraction after 1958 took place by means of the “open pit mining” approach and included phosphate crushing and washing after extraction.

In the early 1960s, JPMC started phosphate washing operations and disposed of the wash water into Wadi Marka. Sediments accumulated and formed a sediment dam that blocked the flow of water in the valley and the Russeifah Lagoon was created. After the lagoon was created, several nearby industries used it for wastewater disposal; these included the Pepsi factory, an agricultural products factory, and a sulfur company (RSS, 1995).

During the mid-1980s, deposits of high grade phosphate ore were found in southern Jordan at Al Hassa, Al Abiad and Ehshidiya. As these new areas were developed, the mining activity at Russeifah became very limited, and most-by products of the mining activities were left behind, including the contaminated Russeifah Lagoon.

In 2002, the Ministry of Municipal Affairs (MoMA) performed a remediation effort on the lagoon that included pumping the existing water to the sewer line, dredging the

contaminated soil, and rehabilitating and landscaping the area. MoMA also installed submersible pumps to pump the water to the Zarqa River in the winter. However, the pumps were subject to acts of vandalism and theft which rendered them inoperable shortly after installation (MWI/JVA, 2006).

In 2008, GAM conducted a project to develop and improve the area surrounding the lagoon as a local park amenity for the local residents. Lagoon water was used to irrigate the planted area surrounding the lagoon and known as “Farah Park.” The park is located on 105 dunums (10.5 ha) and includes a library, an information technology center, a youth center and a small football pitch (USEPA/USAID, 2006). However, it didn’t take long for vandals and thieves to remove all electrical wiring and any other salvageable materials. Figure 2-4 shows some of the park amenities that survived the acts of vandalism and theft.

Figure 2-4 Park amenities near the northwest corner of the site include access gate, paved pedestrian paths, and trees. The curved light pole shown in the upper right of the photo is missing its light fixture as a result of theft and vandalism.

On occasion, when the lagoon fills with water, such as occurred in 2003 and 2007, it is understood that WAJ pumped excess water that accumulated in the lagoon to the adjacent 800-mm main sewage trunk line. The sewage trunk line is located east of the lagoon and flows towards the As Samra wastewater treatment plant.

Despite the previously mentioned remediation efforts, the sources of trash, debris, and wastewater contributing to the poor water quality in the lagoon have not been addressed, resulting in a continuing problem of bad odors and undesirable pests caused by the polluted surface water impoundment. Similarly, recurring acts of vandalism and theft can be expected to continue.

2.4 Climate

The climate of Jordan in general is of East Mediterranean type, characterized by warm, dry summers and mild, wet winters. Annual average temperatures range from 12 - 25°C, reaching up to 40°C in summer. Annual rainfall values vary widely within the area, ranging from 50 mm (2 inches) in the desert to 800 mm (31.5 inches) in the northern hills. The climate of the study area is dry and hot in summer, with westerly winds. During the winter months it is cool and rainy, with occasional winter frost.

For the area of study, annual average precipitation is 247 mm (9.7 inches). The majority of the rain falls during the period from November to March. On average, almost half (48 percent) of the total average precipitation occurs during January and February. The average temperature increases towards the south-eastern part (desert areas), while it decreases towards western parts (hills). Table 2-1 presents the meteorological parameters obtained from the Amman (Marka) Airport Meteorological Station, which is the nearest station to the study area.

Table 2-1: Meteorological Parameters at the Study Area

Amman Airport Meteorological Station: E 35 59', N 31 59', Elevation= 780 m												
Mean Air Temp "C°" During 1923-2000												
Jan	Feb	Mar	Apr	May	Jun	Jul	Aug	Sep	Oct	Nov	Dec	Yearly
9.2	10.2	13.9	17.5	22.3	25.5	27.4	27.3	25.2	22.0	15.4	10.5	18.9
Mean Total Rainfall Amount "mm" During 1922-2000												
Jan	Feb	Mar	Apr	May	Jun	Jul	Aug	Sep	Oct	Nov	Dec	Yearly
58.2	61.2	31.2	16.2	4.5	0.0	0.0	0.0	0.0	2.8	24.5	48.4	246.9
Mean No. of Rainy Days (Rainfall Amount >=0.1 mm) During 1923-2000												
Jan	Feb	Mar	Apr	May	Jun	Jul	Aug	Sep	Oct	Nov	Dec	Yearly
10.9	11.0	6.3	4.6	1.8	0.0	0.0	0.0	0.0	2.2	4.9	7.7	50.6
Total Evaporation, Class A Pan "mm" During 1962-2000												
Jan	Feb	Mar	Apr	May	Jun	Jul	Aug	Sep	Oct	Nov	Dec	Yearly
57.4	71.0	121.0	173.1	274.4	318.8	356.2	316.2	241.5	175.4	97.2	61.7	777.6
Daily Mean Relative Humidity "%" During 1966-2000												
Jan	Feb	Mar	Apr	May	Jun	Jul	Aug	Sep	Oct	Nov	Dec	Yearly
73.9	72.4	62.8	53.8	43.6	42.6	43.3	49.3	53.6	56.1	61.4	69.8	56.9
Mean Wind Speed "Knot" During 1977-2000												
Jan	Feb	Mar	Apr	May	Jun	Jul	Aug	Sep	Oct	Nov	Dec	Yearly
4.7	5.6	5.2	5.9	5.7	6.0	6.8	5.5	4.4	3.1	3.5	4.0	5.1
Prevailing Wind Direction "Degree" During 1977-2007												
Jan	Feb	Mar	Apr	May	Jun	Jul	Aug	Sep	Oct	Nov	Dec	Yearly
227.0	231.4	256.3	262.4	267.4	283.8	277.8	284.8	287.1	265.0	209.3	216.1	268.0
Mean Pressure at Station Level "Hpa" During 1977-2000												
Jan	Feb	Mar	Apr	May	Jun	Jul	Aug	Sep	Oct	Nov	Dec	Yearly
928.0	926.5	925.8	924.3	923.8	922.6	920.8	921.6	924.6	926.9	928.4	928.7	925.2

2.5 Geology

Information about the geology of the Russeifah Lagoon area was obtained from the geological maps provided by the Jordanian Natural Resources Authority (NRA) in 2004. Based on the NRA maps, a general geological map of the project area is

presented in Figure 2-5. The lagoon is designated with the number 4 in Figure 2-6, which indicates the lagoon area falls within the area mapped with the Amman Silicified Limestone formation.

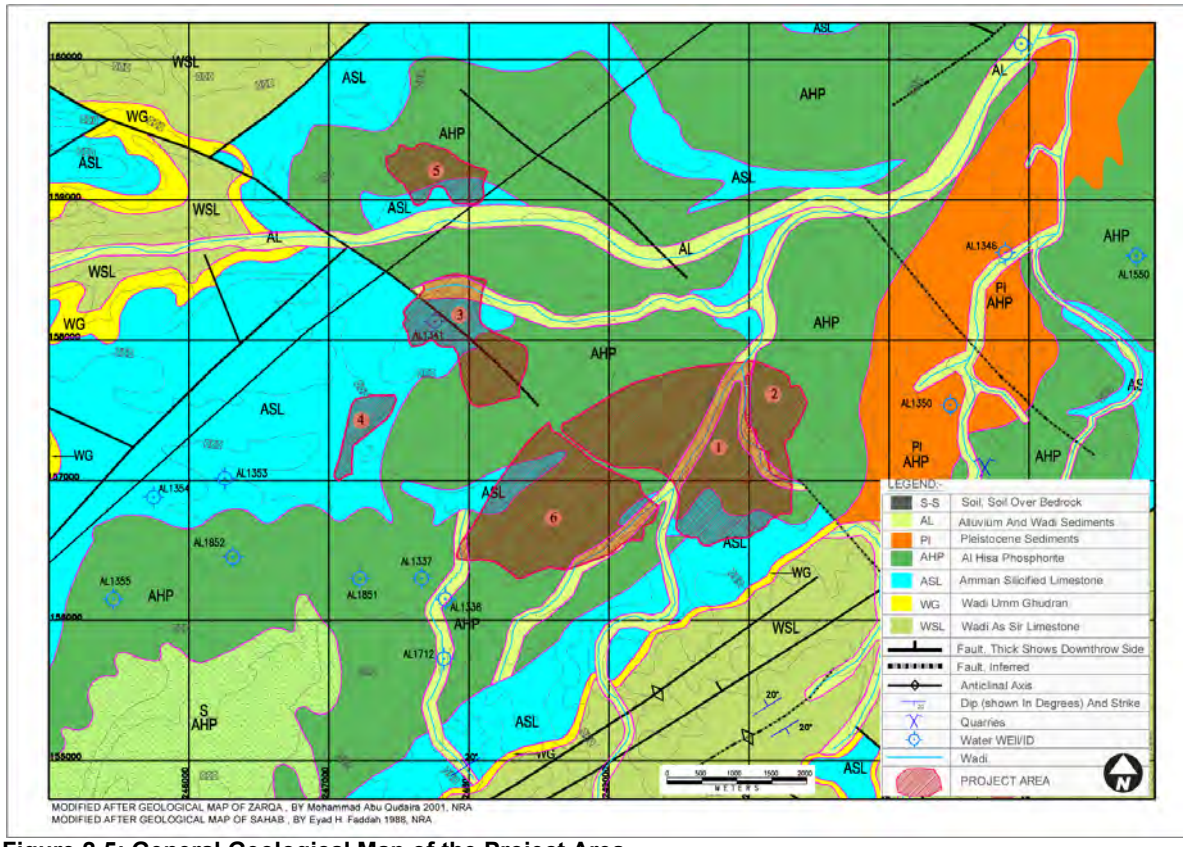

Figure 2-5: General Geological Map of the Project Area

Also as per NRA geological maps, geological formations in the area are characterized by the main following formations, in a descending order;

- Recent Deposits
- Al Hisa Phosphorite Formation
- Amman Silicified Limestone
- Wadi Umm Ghudran Formation

2.6 Previous Geotechnical Investigations

A geotechnical study was included in “The Development of Phosphate Mining Concession Area in Russeifah” (1995). This study was conducted by the Royal Scientific Society (RSS) in order to investigate the mechanical and physical characteristics of the existing layers through digging boreholes in selected locations. Main elements of the geotechnical study found of relevance to the Russeifah Lagoon study are discussed in the following paragraphs.

2.6.1 Boreholes

In 1994, 37 boreholes were drilled by RSS, of which 3 boreholes were near the Lagoon, as shown in Figure 2-6. These locations are believed to be in alignment with the original wadi that drained the project area to Wadi Zarqa (Zarqa River).

Figure 2-6: Location of Boreholes North of Lagoon

Table 2-2 presents the lithology of the three boreholes. The top 12 to 14 meters of material described as pale yellow to white marl is characteristic of spoil material generated from phosphate ore processing.

Table 2-2: Summary of Boreholes Lithology

Borehole No / Location	Depth (m)	Lithological Description
BH 33	0 to7.5	Pale Yellow to White Marly Clay and Limestone. (Samples are wet below 3.5m).
	7.5 to 8.5	Pale Yellow marl with gravel of chert and limestone
	8.5 to 12	White, moderately weak, marly limestone, interbedded with rosy weak marl
	12 to 16	White, moderate strong limestone below
BH 34	0 to10	Pale Yellow to White Marly Clay and Limestone. Samples are wet below 3.5m.
	10 to 11	Pale Yellow marl with gravel of chert and limestone
	11 to 14	White weak Marly limestone
	14 to 16	White strong limestone with chert and yellow marl
BH 35	0 to 14	Pale Yellow to White Marly Clay and Limestone. Samples are wet below 3.5m and moisture content increases as depth increases.
	14 to 16	Pale Yellow Marl/ chert and limestone

2.6.2 Faults

The observed faults in the area of study were found mainly in three directions: a fault in an East - West direction located parallel to the Zarqa River, two faults in the North East - South West direction, located at the South East corner of the site, and two faults in the North West - South East direction, one in the northern area and one south of the Amman Zarqa road (RSS, 1995).

Several major and minor faults cross the study area. The layers located at the sides of these faults are generally characterized with a gentle slope and so are the minor faults within the area. The area includes one major syncline fault directed North East- South West, in addition to three vertical faults which fall on the major fault. The three faults have an anticline shape and are also directed North East- South West. The first is in the southern and crosses Zarqa area. The second and third faults are parallel and border the northern mine from the west forming a small basin in the area (RSS, 1995).

2.7 Hydrology

2.7.1 Surface Water in Jordan

Jordan has three major rivers: Jordan River, Yarmouk River, and Zarqa River. The Jordan River flows from the north to the south and is considered saline and not directly suitable for drinking or irrigation purposes (NWMP, 2004). Yarmouk River arises in Syria and flows into the Jordan River with an average flow of 360 Million Cubic Meters (MCM)/year. The Zarqa River flows to the north before heading west and finally discharging into the Jordan River at an elevation of 1,090m lower than its origin (Hadadin, Qaqish, et al., 2009). Currently in the summer these rivers are all mostly dry.

The drainage system in Jordan consists of three main flow directions. The first group includes the Dead Sea basins, which drain towards the Jordan Rift Valley, discharging into the Dead Sea. This group is considered the most important group of basins since it is shared by six countries. The second group consists of the Eastern Desert basins, which drain the rainfall through the wadis flowing eastwardly from the western highlands towards the eastern desert. Finally, the southern basins drain into the Red Sea and into the southern desert areas (NWMP, 2004).

From the three main surface basin areas mentioned, 15 surface water catchments/ basins were identified. Table 2-3 presents these basins, their catchments areas and the average annual rainfall of each and in accordance with the Rainfall-Runoff Model for the years 1937/38 – 2002/03.

Table 2-3: Surface Water Basins in Jordan

	Surface Water Basin					Basin Code	Catchment Area (km^2)	Average Annual Rainfall (mm/year)
	Basin/Area			Basin Name				
1	Dead Sea Basin	Jordan River Subbasin	Northern Basins	Yarmouk		AD	1,426	280
2				Amman-Zarqa		AL	3,739	220
3				Jordan Valley		AB	780	270
4				Jordan Valley Rift Side Wadis	North	AE, AF, AG AH, AJ,AK	946	490
5					South	AM, AN, AP	736	370
6		Dead Sea Subbasin	Central Basins	Mujib		CD	6,727	180
7				Hasa		CF	2,603	130
8				Dead Sea Rift Side Wadis		C	1,508	240
9				North Wadi Araba		D	2,953	180
10	Eastern Desert Basin			Azraq		F	12,400	85
11				Hammad		H	18,047	85
12				Sirhan		J	15,733	45
13				Jafer		G	12,363	45
14	Southern Basins			South Wadi Araba		E	3,742	75
15				Southern Desert		K	6,296	15
						Total	90,000	100

(Source: National Water Master Plan, 2004)

2.7.2 Hydrology of the Study Area

The project area falls within Amman -Zarqa surface water basin. The Amman-Zarqa Basin has a total catchment area of about 4,150 km^2, of which 3,725 km^2 is located in Jordan and the remaining portion is in Syria.

The main three wadis within the catchment area are Wadi Marka, Wadi Al-Qetar, and Wadi Al-Esh. The catchment area of Zarqa River is approximately 3,100 km^2, containing almost 65% of the country's population and more than 80% of its industrial facilities. It extends from the foothills of Jabal Druz towards the Jordan River.

The Zarqa River is considered the main drainage course and divides Russeifah area into two main parts. The river originates in western Amman and flows north towards the town of Zarqa and turns westwards towards the Rift Valley. The Zarqa River, as shown in Figure 2-7, consists of two main branches: Wadi Dhuliel, which drains the eastern part, and Amman-Zarqa, which drains the western part. Both branches meet at Sukneh to form the Zarqa River. Moreover, the Zarqa River receives substantial municipal, industrial and agricultural effluent and is considered unsuitable for domestic or irrigation uses in the dry season and improves its quality only in the flood periods (Hadadin, Qaqish, et al., 2009).

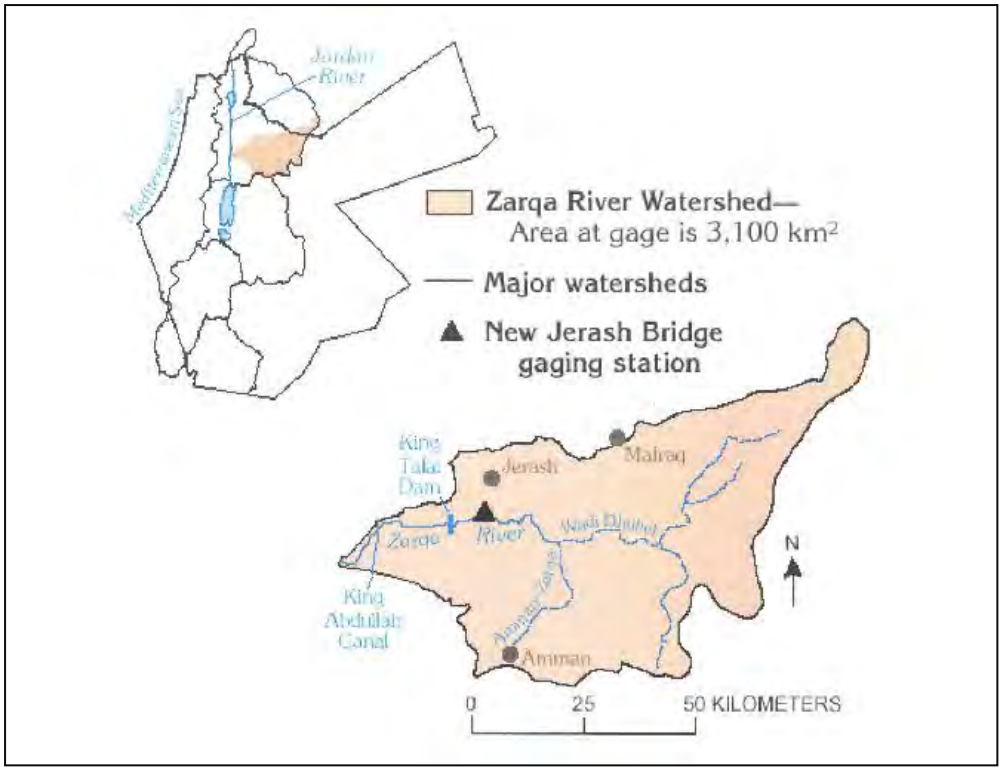

Figure 2-7: Zarqa River and Basin
(Source: The integrated Environmental Management of the Zarqa River, Interdisciplinary Research Consultants, 2006)

Average annual surface runoff in the Zarqa River basin is around 100 MCM/year (53 and 47 MCM/year for base flow and flood flow, respectively). The Zarqa River, in addition to its natural runoff, conveys large volumes of treated wastewater effluent from As-Samra treatment plant, as well as some flows from Jarash, Abu Nuseir and Baqa'a treatment plants, into the King Talal Dam reservoir

3.0 SITE ASSESSMENT

This section provides an overview of the existing site conditions and the main sources of inflow into the lagoon. It also presents the current operations and recent assessments conducted at the lagoon site.

3.1 Site Description and Existing Conditions

The lagoon is a stormwater wet retention pond heavily polluted from various sources, including raw sewage, contaminated urban stormwater runoff, and substantial quantities of trash and debris. The water is greenish and algae-laden, contributing to bad odors. Floating waste and debris make this lagoon look ugly and generally unattractive. Stagnant water provides year-round habitat favorable for the proliferation of nuisance insects, most notably mosquitos.

The area covers approximately 100 dunums or 100,000 m^2. The stormwater impoundment area covers almost 80 percent of the site. The remaining area consists of open land and the Farah Park, which, as stated above and as shown in Figure 3-1, includes a library, an information technology center, a youth center, and a

football pitch. There is a USAID-supported public school located uphill and just east of the pedestrian bridge, frequented by school children who use it to cross the lagoon near the south end of the lagoon site.

Figure 3-1: View of Area 4 (Lagoon and its Surrounding Land Use)

3.1.1 Site Hydrology

Most of the year, the weather is dry (no rainfall) and the lagoon levels remain fairly constant. However, during the rainy season, the lagoon water levels can experience substantial fluctuations in direct response to rainfall amounts. Most of the water retained in the lagoon will recharge groundwater by infiltration. Smaller quantities are lost to evaporation.

The total catchment area for Wadi Marka is approximately 21 km^2. The total catchment area for the lagoon based on current conditions is approximately 7 km^2 of mostly built-up, impervious areas which generate significant quantities of runoff and high peak rainfall runoff flows.

With no outfall, the lagoon acts as a stormwater retention pond. A topographic survey of the lagoon site was conducted in 2011 by Al Mehwer Survey Office for the Project. Lagoon depths were measured by a sampling team from the Royal Scientific Society (RSS). A stage-storage chart was developed for the retention area based on this survey data and is shown in Figure 3-2.

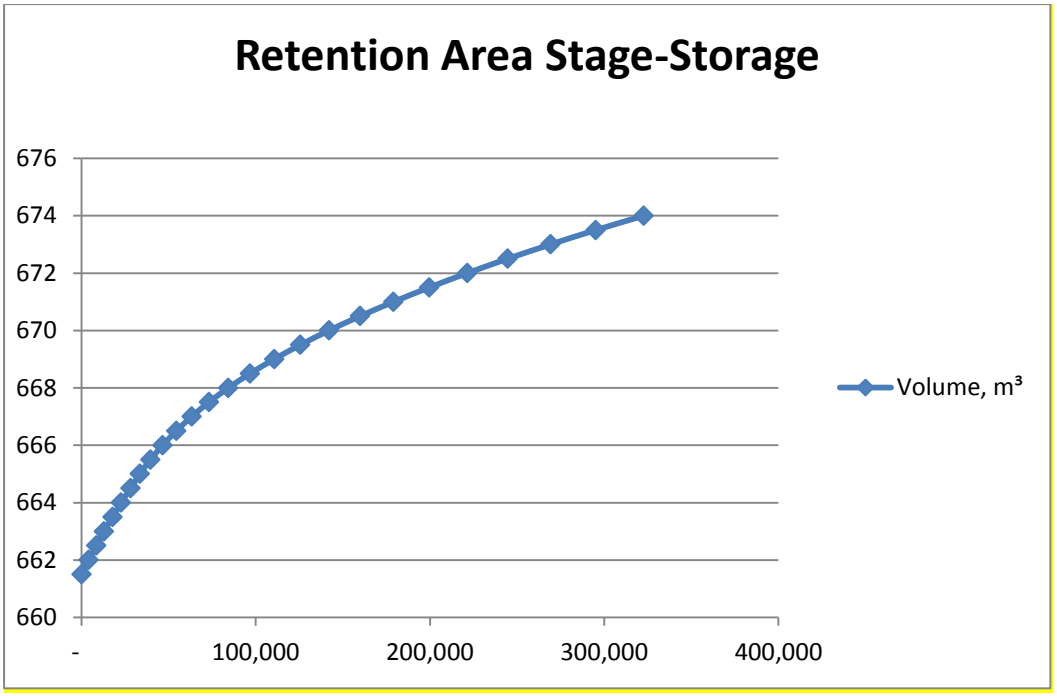

Figure 3-2. Stage-storage chart for the retention area (Vertical axis is water surface elevation in meters and horizontal axis is storage volume in m^3)

Water levels in the lagoon fluctuate substantially following significant rainfall events. During Year 3 of the project, in early January 2013, a substantial rainfall event occurred, which afforded an opportunity to observe the behavior of the retention area in response to a sudden increase in the volume of water inflow.

Valuable evidence of peak water level immediately following a major rainfall event was captured on video by the lead maintenance worker at Farah Park which he uploaded onto Youtube. Still photos copied from the video are provided in Figures 3-3 and 3-4.

The Meteorological Department of the Hashemite Kingdom of Jordan recorded a total of 119.3 mm (4.7 inches) of precipitation over the 3-day period of 07 through 09 Jan 2013. This 3-day total is almost half (48 percent) of the annual average rainfall for the area. Daily precipitation records for the Amman (Marka) Airport weather station during this period are shown in Table 3-1.

Table 3-1 Precipitation at Amman (Marka) Airport

Jan 2013	Precipitation, mm
04	0.0
05	7.9
06	4.0
07	56.2
08	40.9
09	22.2
10	1.5
11	0.0

Figure 3-3 West double culvert discharging to Russeifah lagoon during high water event on 09 Jan 2013

Figure 3-4 Viewing south, the top of an almost completely submerged manhole structure is shown in the top-center of the photo of Russeifah lagoon during high water event on 09 Jan 2013

The water surface in the photograph is almost to the top of the (abandoned) manhole structure shown in the top-center of the photo in Figure 3-3 . The top of this manhole structure is at elevation 672.28 meters above sea level (asl) based on a topographic survey conducted by the project. Based on the photograph, the water surface level can be seen to be just below the top of the structure, or approximately 672.2 meters above sea level (asl).

Over a period of one year (from 23 Aug 2012 to 15 Aug 2013), photographs were taken of the lagoon periodically to observe the water surface levels. Using these photographs, it is possible to observe the time it takes for the water levels to return to

their normal levels after the 09 Jan 2013 storm event. Elapsed time photographs of the lagoon water levels are presented in Figures 3-5 through 3-10.

Figure 3-5 Lagoon water surface on 23 Aug 2012. (There was insufficient photographic evidence to estimate the water surface elevation on this date.)

Figure 3-6 Lagoon water surface on 05 Dec 2012 was estimated to be approximately elevation = 664.9 m

Figure 3-7 Lagoon water surface on 03 Feb 2013 was estimated to be elevation = 667.23 m

Figure 3-8 Lagoon water surface on 03 Mar 2013 was estimated to be elevation = 665.9 m

Figure 3-9 Lagoon water surface on 03 Apr 2013 was estimated to be elevation = 665.1 m

Figure 3-10 Lagoon water surface on 15 Aug 2013 was estimated to be elevation = 664.4 m

Water surface elevations are estimated based on interpretation of photographic evidence and known elevations of fixed structures as measured during the site topographic survey. Without a proper staff gauge, these elevations are considered approximate.

The lagoon water surface elevations over time are shown in Figure 3-11. After the 09 Jan 2013 peak event, the water surface gradually declined over the next 3 months to a level that approached the level observed at the start of the wet season as is represented by the photograph dated 15 Aug 2013.

The total stormwater retained as a result of the 3-day rainfall event of 07-09 Jan 2013 can be estimated based on the water surface elevation observed before and after the storm event. Before the storm event, the water surface elevation was approximately 664.9 m based on the 15 Dec 2012 photographs. For the purpose of this analysis, it is assumed that the relatively small rainfall amounts recorded between 15 Dec 2012 and 07 Jan 2013 resulted in negligible changes to the lagoon water surface.

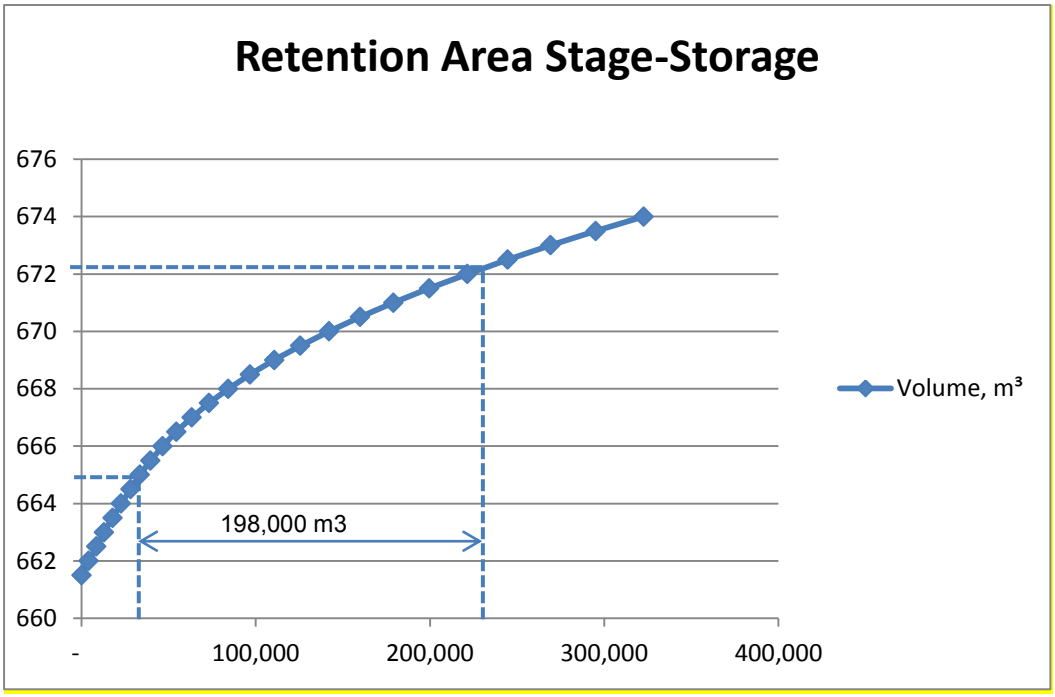

Figure 3-11 Retention area stage-storage (Vertical axis is water surface elevation in meters and horizontal axis is storage volume in m^3).

Based on a total estimated catchment area of 7 km^2 and a 3-day rainfall total of 119.3 mm, approximately 24% of the total precipitation was retained in the lagoon.

Figure 3-12 shows that the difference in the volume of water retained in the lagoon between the peak water level of 672.2 m, as observed on 09 Jan 2013, and a pre-storm event water level of 664.9 m, as observed on 15 Dec 2012, is approximately 198,000 m^3.

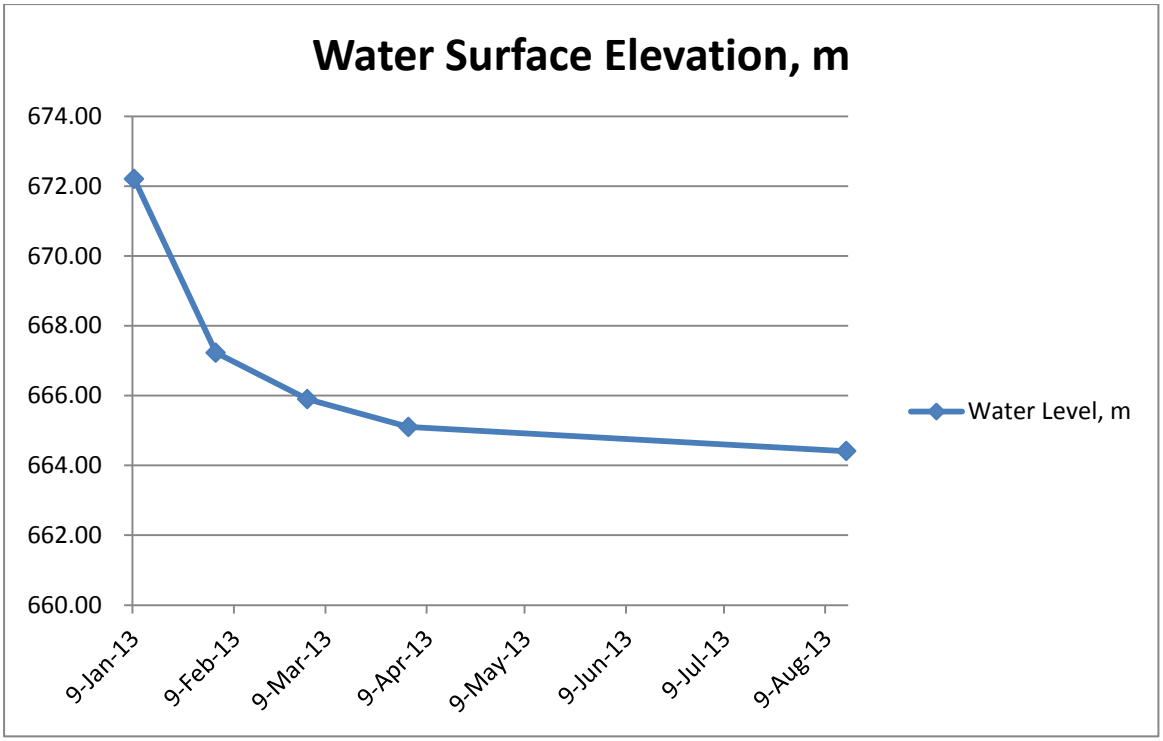

Figure 3-12 Lagoon water surface elevations from 09 Jan 2013 to 15 Aug 2013 (Vertical axis is water surface elevation in meters)

Wet Season Groundwater Level. The wet season groundwater level can be determined from lagoon water level data and observed soil surfaces along the side banks of the lagoon. The end of the wet season is represented by the photograph in Figure 3-9 above, dated 03 Apr 2013. It can be assumed that the level of groundwater at the end of the wet season will be the same as the water level at the end of the wet season. This is further confirmed by the change in the character of the side slopes below this level. At the end of the dry season, the side slopes below the wet season groundwater level are exposed and were observed to be less steep and more uniform, with a smooth surface and small rivulets indicative of groundwater exfiltration. For the purposes of this report, the wet season ground water surface elevation is estimated to be 665.1 m.

Infiltration rates were estimated to verify the water surface elevation data. Actual rainfall recorded during this period was approximately the same as the average pan evaporation rates, therefore, for the purpose of the estimating infiltration rates, it was assumed that the inflow from rainfall and outflow from evaporation offset each other with no net impact on the water surface elevation. Figure 3-13 shows the estimated water surface elevations estimated from photographic evidence. Figure 3-13 also shows a computer-generated curve fit assuming an exponential relationship.

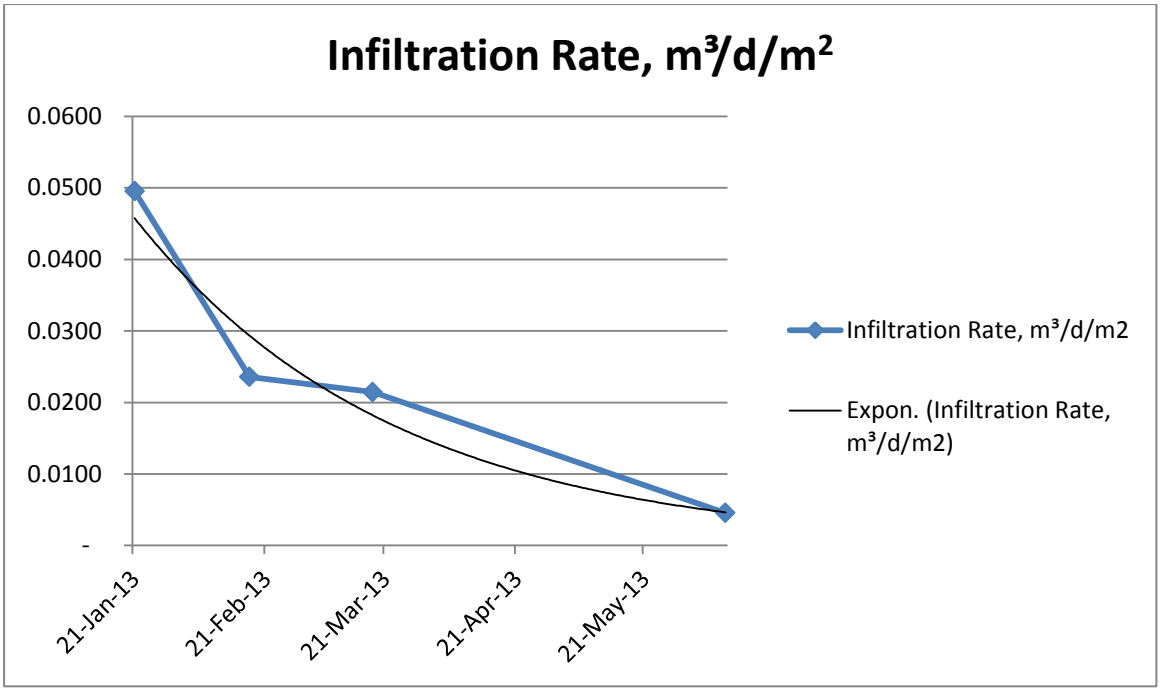

Figure 3-13 Lagoon water surface elevations from 09 Jan 2013 to 15 Aug 2013 calculated from field observed approximate water surface levels and an exponential curve fit.

The calculated infiltration rates gradually decline exponentially which is expected. The steepness of the graphed data between the first two data points is likely attributed to the additional abstraction of water in the unsaturated soils. Overall, the gradually declining infiltration rates are as expected and verify the estimated water surface elevation data.

3.1.2 Stormwater Infrastructure

The lagoon has four culverts that empty into the lagoon area and are located north, south, east, and west within the walled area of the lagoon, as shown in Figure 3-14. The north and east culverts are single concrete pipes, and the west and south culverts are double concrete pipes.

In the catchment area, trash and debris are commonly disposed into the lowest lying areas, which coincide with stormwater drainage features. Stormwater conveyance is negatively impacted by the excessive amounts of debris and solid waste that inevitably end up blocking and obstructing the stormwater conveyance structures. In addition, the lagoon water quality is also negatively impacted by stormwater runoff coming in contact with excessive quantities of trash and solid waste.

Figure 3-14: Lagoon Culverts and Source of Inflow

All of the northern and eastern culverts currently appear to be blocked with garbage or debris. The south double culverts are currently cleared of debris but do experience occasional partial or full blockage. Of the two pipes that make up the double culvert on the west side of the lagoon, one culvert is believed to be completely blocked and the other is relatively clear.

The Hitteen refugee camp is adjacent to the lagoon to the west and south. The majority if not all of the Hitteen refugee camp lies within the catchment area for either the west culvert or the south culvert. There is also a large sewage pumping station serving the Hitteen camp area just upstream of the south culvert. The location of the pumping station is significant because in the event the pumping station overflows, or is inundated with flood waters as occurred during the 09 Jan 2013 rainfall event, the pujmping station becomes another source of raw wastewater to the lagoon.

The south double culvert has the greatest catchment area, serving the entire upstream reaches of the Wadi Marka. It also receives the greatest quantities of debris. The upstream entrance to the south double culvert is prone to being obstructed by substantial quantities of debris. The debris is occasionally removed by mechanical excavators or hand digging, presumably by the local municipality. Figures 3-15(a) and 3-15(b) show the upstream end of the south double culvert both before and after being cleared of debris. Obviously, the double south culvert is subject to receiving excessive quantities of trash and debris that will compromise its ability to pass significant quantities of flow during major rainfall runoff events.

The outlet end of the South Culvert is in poor condition, as shown in Figure 3-16. Damage is likely to have been caused by soil erosion during substantial stormwater drainage events. Without intervention, the perimeter wall and the paved road just

beyond the wall will be undermined by stormwater erosion and will ultimately collapse.

Figure 3-15(a) and 3-15(b): Upstream end of South double culvert before (left) and after (right) debris removal by maintenance workers

Figure 3-16: Downstream end of south double culvert outlet revealing the two 900 mm diameter concrete pipes in a current condition of disrepair, including missing end wall, separated pipe joints, and substantial undermining of structural support for the culverts.

Following a substantial rainfall runoff event in early January 2013, it was reported that the existing sewage pumping station, shown in Figure 3-17, was flooded to a level that was higher than the top of the top cover of the pumping station wet well. The leading cause of this flood was trash and debris that accumulated and obstructed the double South culvert.

Figure 3-17 Sewage pumping station serving Hitteen Refugee Camp lies within the Wadi Marka flood plain and is located nearby the lagoon just upstream of south double culvert. The dark green patch of grass is a naturally-occurring bioswale resulting from routine discharge of wash water from equipment cleaning and an undetermined frequency of sewage overflows.

The upstream catchment area of both the west and south culverts can be characterized as heavily urbanized with substantial solid waste accumulations almost everywhere. Even though garbage trucks are deployed to collect trash from dumpsters, substantial quantities of trash and debris do not make it to the dumpsters and end up gathering along the lowest elevations, which are the drainage ways. Examples are shown in Figures 3-18, 3-19, and 3-20.

There is an excessive amount of trash and debris in the catchment areas to these culverts, which has resulted in the culverts being partially or completely blocked by debris. The source of the debris is the apparent accepted practice of indiscriminate littering and dumping throughout the local community.

The degree of solid waste material in the wadis and drainage ways is severe. The current practice of occasional maintenance to remove accumulated debris from drainage conveyances, although helpful, cannot be expected to keep these drainage features functioning properly when needed. Unless more is done to remove debris more frequently, and more is done to educate the people to stop indiscriminate dumping and littering, drainage culverts in this area can be expected to continue to be blocked with debris with each major storm event. Maintenance to remove

accumulated debris from the entrance to major drainage structures in advance of the storm events cannot be expected to prevent recurring blockages. This is because debris in the wadi channels will be carried along by the stormwater runoff to the nearest culvert, only to become blocked by accumulations of the newly arrived debris.

Figure 3-18: Wadi Marka viewing north from 4-box culvert bridge, showing substantial dumping of solid waste and active garbage collection from dumpsters (photo dated 23 Oct 2012)

Figure 3-19: Wadi Marka 4-box culvert showing one culvert completely blocked and another partially blocked by solid waste material (photo dated 23 Oct 2012)

Figure 3-20. Indiscriminate littering and dumping in the Wadi Marka primary drainage channel is commonly accepted practice (photo upstream of 4-box culvert date 23 Oct 2013)

The substantial erosion in and around the double west culvert caused the culvert end wall to completely collapse. The erosion also caused the perimeter paved walkway to be undermined. Figures 3-21a and 3-21b show the condition of the west culvert before and after the January 2013 stormwater drainage event. Figure 3-22 provides a closer view of the South Culvert before the January 2013 storm event, with a partially-failed end wall, including a portion of the wing wall missing, no underlying concrete foundation, and soil material under pipe inverts undermined by erosion. Figure 3-21b shows conditions after the January 2013 storm event, with remnants of the South Culvert end wall lying in 3 large pieces and one pipe segment totally disconnected from each culvert.

Figures 3-21 a and 3-21 b. West double culvert before (left) and after (right) the 09 Jan 2013 storm event.

A properly designed and constructed concrete endwall structure, such as can be constructed from standard detail drawings which are readily available from various Departments of Transportation (DOT) from any of the states in the United States,

would be able to withstand the effects of the stormwater runoff event that destroyed this structure.

Figure 3-22. Close-up view of west double culvert before the 09 Jan 2013 storm event showing partial structural failure, no structural foundation, and soil erosion under the pipe culverts.

Outfall. A representative of Greater Amman Municipality who is stationed at the Farah park site advised that there is no outfall for the water in the lagoon. Within the flooded area of the lagoon, there are three square manhole structures that protrude two meters or more above the ground surface. GAM's represetative advised that the manholes were for a sanitary sewer that has since been plugged and abandoned. It may be necessary to verify that the sewer is plugged.

An observation made before and after the 09 Jan 2013 storm event may warrant further investigation of the claim that the lagoon has no outfall and the sewers are plugged. Based on photos of the "abandoned" sanitary sewer manhole located at the northeast corner of the lagoon, its possible that this manhole may provide a route for water to discharge from the lagoon when the water in the lagoon is higher than the top of this manhole.

The sewer manhole at the northeast corner was surveyed by the project to have an top of structure elevation of 671.70 meters. A photograph of the structure before the 09 Jan 2013 event shows large green mat of grassy vegetation floating in the lagoon. After the storm event, this mat of floating vegetation was gone. A large dead, dried grass mat can be seen perched on top of the manhole structure as shown in Figure 3-23. It is conceivable that at peak water levels in the lagoon, water flows into the top of the structure. It appears that the mat of floating vegetation may have floated over the topo of this manhole structure, and remained there as the waters receded. It is possible that the grass mat floated over the manhole structure and was captured by the surface currents induced by the discharge of water into the top of the manhole structure. This photographic eveidence suggests the possibility that this sewer manhole could serve as an outfall during periods of peak water levels in the lagoon.

Figure 3-23. Large floating mat of aquatic green vegetation in the lagoon before the 09 Jan 2013 storm event (left) and a mat of dry and dead vegetation on the top of the "abandoned" sanitary sewer manhole located in the northeast corner of the lagoon after waters from the 09 Jan 2013 storm event receded.

3.2 Non-Stormwater Inflows

In addition to rainfall runoff, retention lagoon receives inflows raw sewage and municipal water.

Raw Sewage

A driving-around tour of the Hitteen camp resulted in the discovery of raw sewage flowing up and out of sanitary sewer manholes onto the street and into the stormwater drainage system. Raw sewage overflowing a manhole cover near the lagoon is shown in Figure 3-24. The raw sewage that enters the stormwater drainage system ultimately flows to the retention lagoon

A more detailed investigation into the problems with the existing sewage drainage system serving Hiteen Camp was performed. The project team toured the network, talked with local residents, inspected a few manholes, reviewed available sewer network maps, and talked with representatives of WAJ regarding routine sewer maintenance and cleaning.

Many manhole covers were missing. An example of a missing manhole cover is shown in Figure 3-25. Local residents report that the covers are typically stolen and sold to salvagers as scrap iron. Some manholes were full with solid waste, including large objects like foam matresses, tires, and typical construction and demolition waste materials. It is determined that sewage overflows occur as a result of blockage caused by sediments and bulky waste items.

Figure 3-24: Viewing east, raw sewage overflows a manhole cover and flows overland through trash-strewn vacant land towards the lagoon which is located just beyond the houses that can be seen in the middle-upper right of the photo.

Figure 3-25: Missing sewage manhole cover in Hiteen Camp, Russeifah

The main wastewater contamination source in the lagoon is routine flooding of nearby sewer lines onto the roads and consequently into the Lagoon. Two causes for sewer flooding were identified as: 1) clogging in the sewer line resulting from sediments accumulating in the line and bulky item disposal (this was observed at Hitteen camp west of the Lagoon) and 2) sewer lines that do not have the capacity to accommodate current flows.

Sewer line maintenance is expected to remain an issue for the near future. The proposed remediation plan for the Lagoon therefore assumes that some wastewater influx will continue to drain into the Lagoon.

Municipal Water
Household water systems in the Hitteen camp typically consist of a storage tank on roof top of each house or apartment building. An intermittent supply of municipal water fills the storage tanks for daily use. The float valves in these tanks, which are supposed to stop the inflow of water into the tank when the tank level is full, are mostly not operational. Therefore, the inflow of water to the tank continues after the tank is full resulting in the tank overflowing, draining from the roof to the street level, and eventually flowing along walkways, streets, siqs (alleys), drainage ways, and ultimately discharges to the Lagoon. Examples are shown in Figure 3-26.

Figure 3-26: Views of municipal water draining along paved paths and roads within Hitteen Camp.

3.3 Water Quality

The main objectives of water sampling at the Lagoon site were to:

- Characterize the water quality in the lagoon
- Provide data to indicate potential source(s) of contamination

On 12 July 2012, water samples were collected from five locations in the Lagoon at a depth of 1 meter below the water surface. In addition, the water flowing into the

lagoon from the West Culvert was also sampled. Figure 3-27 shows the sampling process and Figure 3-28 shows the sampling locations.

Figure 3-27: Sampling in Russeifah Lagoon

Figure 3-28: Location of Water Samples Obtained from the Lagoon

The analytical test results for the sample collected from the water flowing out of the west culvert are summarized in Table 3-2. The results are compared to the Jordanian Standard (JS) of Reclaimed Domestic Wastewater No.893 shown in Table 3-2. It is apparent that the water flowing from the western culvert is impacted by domestic sewage because the Total Kjeldahl Nitrogen (TKN), Biochemical Oxygen Demand (BOD_5), Chemical Oxygen Demand (COD), and Total Coliform (TTCC) data are typical of raw sewage.

Table 3-2: West Culvert Sample Results Compared to JS 893:2006

Parameter	West Culvert Sample Results	Allowable Limit (JS 893:2006)
T.K.N (mg/L)	27.2	-
BOD_5 (mg/L)	**397**	60
COD (mg/L)	**648**	150
TDS (mg/L)	**1,514**	1,500
TSS (mg/L)	**76**	60
NO_3 (mg/L)	0.6	80
TTCC (MPN/g)	**4,900,000**	1,000

The lagoon water quality test results are summarized in Table 3-3. The results of the samples were also compared to allowable limits according to the JS standard No.893:2006 for discharge to a wadi. BOD_5, COD, Total Suspended Solids (TSS), and TTCC exceeded the Jordan reuse standards for discharge to wadi in some but not all locations. Elevated TKN and TTCC are indicative of contamination from domestic sewage. Based on these results, the water quality requires some improvement before it can be discharged to the Wadi.

Table 3-3: Result of Five Samples in Comparison to JS 893:2006

Parameter	Sample Code / Results					Allowable Limit for Wadi Discharge (JS 893:2006)
	1	2	3	4	5	
pH (SU)	8.00	8.7	8.6	8.01	8.6	6-9
NH_3-N (mg/L)	12.8	13.5	16.2	16.6	14.2	-
T.K.N (mg/L)	19.8	26.8	26.7	27.5	27.5	-
BOD_5 (mg/L)	**92**	52.3	43.3	49.9	51.9	60
COD (mg/L)	**228**	**247**	**259**	**241**	**282**	150
DO (mg/L)	1.1	**0.9**	**0.3**	1.5	**0.6**	<1
TDS (mg/L)	1,240	1,266	1,252	1,228	1,227	1,500
TSS (mg/L)	56	**78**	**74**	56	**102**	60
NO_3 (mg/L)	<1.0	<1.0	<1.0	<1.0	<1.0	80
TTCC (MPN/100 mL)	$4.5x10^2$	$\mathbf{3.5x10^3}$	$4.9x10^2$	$\mathbf{3.3x10^3}$	$3.3x10^2$	1,000

Jordanian standard 893:2006 also establishes minimum water quality standards for groundwater recharge. These standards are more restrictive than the values shown for Wadi Discharge. It could be argued that the current lagoon configuration as a stormwater retention pond that discharges to groundwater following substantial

rainfall events may not be in compliance with the standards for groundwater discharge.

Dissolved oxygen (DO) concentrations were measured to be between 0.3 and 1.5 mg/l. The measured DO concentrations indicate that the water quality is not sufficient to support healthy fish and aquatic wildlife.

This high organic pollutant level also stimulates the growth of algae in the lagoon which can be a source of bad odors and be a contributing cause of depleting dissolved oxygen levels.

On 13 July 2012, the lagoon bottom profile was measured at 15 locations across 5 transects. Water depth measurements are summarized in Table 3-4. The order of the data transects presented in the table are according to each transects position relative to the West Culvert. For example, the data for Transect No. 3 is located closest to the West Culvert and is presented first. The lagoon depth varied from 1.5 to 3.0 meters. The depth of the lagoon at the approximate center of the water surface ranges from a minimum of 1.5 m along Transect No. 3 to a maximum of 3.5 m along Transect No. 4.

Table 3-4: Depths Measured Along Five Transects Across the Lagoon

Centre Samples		Left Samples		Right Samples	
Transect No.	Depth (m)	Sample No.	Depth (m)	Sample No.	Depth (m)
3	1.5	3L	1.9	3R	0.9
2	2.5	2L	2.2	2R	1.1
1	3.0	1L	2.0	1R	2.0
4	3.5	4L	3.0	4R	1.5
5	2.0	5L	1.5	5R	3.0

Based on site assessment, review of previous reports, knowledge of the area, and sampling of the lagoon water, it is concluded that water is contaminated with wastewater.

3.4 Other Site Issues

Other site issues relevance to addressing the pest and odor problems at the Lagoon include the local community need for a local park and recreation amenities, a history of vandalism, and the apparent disruption of the natural surface water drainage that existing in its pre-development condition.

Building a park near the Lagoon resulted in a significant decrease in vandalism and theft but some incidents were still being reported. In 2002, the Ministry of Municipal Affairs built a pumping station system to pump the water to the Zarqa River. Since then, the exposed components of the pumping station have been stolen, and the pumping station has not been operational since shortly after its installation. When developing remediation alternatives in the lagoon, it is recommended to come up with solutions that address the above problems by safeguarding all valuable parts in enclosed and locked spaces or otherwise keeping them inaccessible.

Historically, the natural flow of storm water from Marka valley and the areas upstream of the current Lagoon location would flow to the Zarqa River. Disposal of

phosphate mining waste and the development of the surrounding areas has blocked the natural outlet to the Zarqa River, creating a retention area with no outfall. A means to discharge water from the retention lagoon needs to be considered in the event that water levels reach extremely high levels to the point of being a threat to public health and safety and causing damage to property.

In a healthy aquatic ecosystem, excessive amounts of algae can cause the DO concentrations to fluctuate substantially, with very low concentrations typically in the pre-sunrise morning and very high concentrations in the afternoon during sunny weather. Algae can sometimes experience rapid growth called “blooms.” When this happens, inevitably, the algae experiences an equally rapid die-off, which causes bod odors and depletes dissolved oxygen. Better control of algae can help reduce the odors and nuisances associated with the lagoon.

4.0 DEVELOPMENT OF ALTERNATIVES

Based on a review of existing conditions, the sources of the odors and nuisance insects associated with the lagoon are identified as follows:

- Lagoon water is heavily polluted and unable to sustain dissolved oxygen (anaerobic) at levels necessary support a healthy aquatic eco-system and therefore, is a primary source of bad odors
- Stagnant water in the lagoon breeds mosquitos
- Floating trash and debris combined with floating aquatic plants, like duckweed, reduce the aesthetic beauty of the waterfront park

Contributing factors are:

- Sources of pollution include:
    - Raw sewage flowing into the lagoon
    - Trash and debris entering the lagoon
    - Heavily contaminated stormwater runoff
- Algae blooms and decomposing bottom sediments contribute to bad odors
- Stagnant conditions and lack of natural aquatic predators of mosquito larvae (such predators are normally associated with a healthy aquatic eco-system) make ideal conditions for mosquito to breed and multiply.

A plan to rehabilitate the Russeifah Lagoon has been developed based on a review of alternatives to address the factors contributing to the source of the problems. The plan presents the suggested alternatives to address odors and nuisances related to poor lagoon water quality. The economic feasibility of a recommended alternative is evaluated and discussed in this section.

The lagoon routinely receives doses of raw sewage. The source of the raw sewage is the overflowing sewer manholes within the Hittin Camp, and the sewage is discharged to the lagoon through the west pipe culvert.

Trash and solid waste enter the lagoon and accumulate as floating debris or bottom sediments.

Stormwater drainage water carries a substantial load of pollutants after coming in contact with trash and debris all over the urban streetscape. This is a result of a seemingly widespread acceptance by the general public of indiscriminate littering and

dumping of municipal solid waste anywhere and everywhere, with a particular preference for dumping in drainage conveyance swales and wadis.

Excessive amounts of floating algae, duckweed, trash and debris that accumulate on the lagoon water surface are shown in Figure 4-1. Algae blooms can quickly turn the lagoon green and cause the formation of floating algae and aquatic plants, such as duckweed. Rapid die-off of algae can release bad odors and reduce or deplete dissolved oxygen levels.

Figure 4-1: Lagoon covered by floating algae and duckweed interspersed with floating trash and debris detracts from the aesthetic beauty and contributes to sources of odors.

4.1 Alternatives

Stormwater management alternatives were developed that would mitigate bad odors and other nuisances associated with the existing lagoon. They are:

- Convert the existing wet retention basin to wet detention
- Convert the existing wet retention basin to dry detention
- Convert the existing wet retention basin to a dry retention basin

Alternatives are also developed to address factors that contribute to the source of bad odors and other nuisances associated with the existing lagoon. They are:

- Divert low flows to the sanitary sewer
- Add in situ lagoon water treatment by mechanical aerators
- Add preliminary treatment (grit trap and bar screen) and bioswale

Whichever alternative is selected, several physical improvements to the public infrastructure are needed and are common to any alternative selected. These are presented later in this section.

For the purpose of this study, terms used to describe various stormwater management alternatives are defined as follows:

Wet Retention – A surface water impoundment with no outfall and a bottom elevation below the dry season groundwater level causing the impoundment to contain water at all times.

Dry Retention - A surface water impoundment with no outfall and a bottom elevation above the wet season groundwater level, causing the impoundment to contain water for extended periods during the wet season and be completely dry during most times of the year. A schematic diagram of a dry retention basis is shown in Figure 4-2.

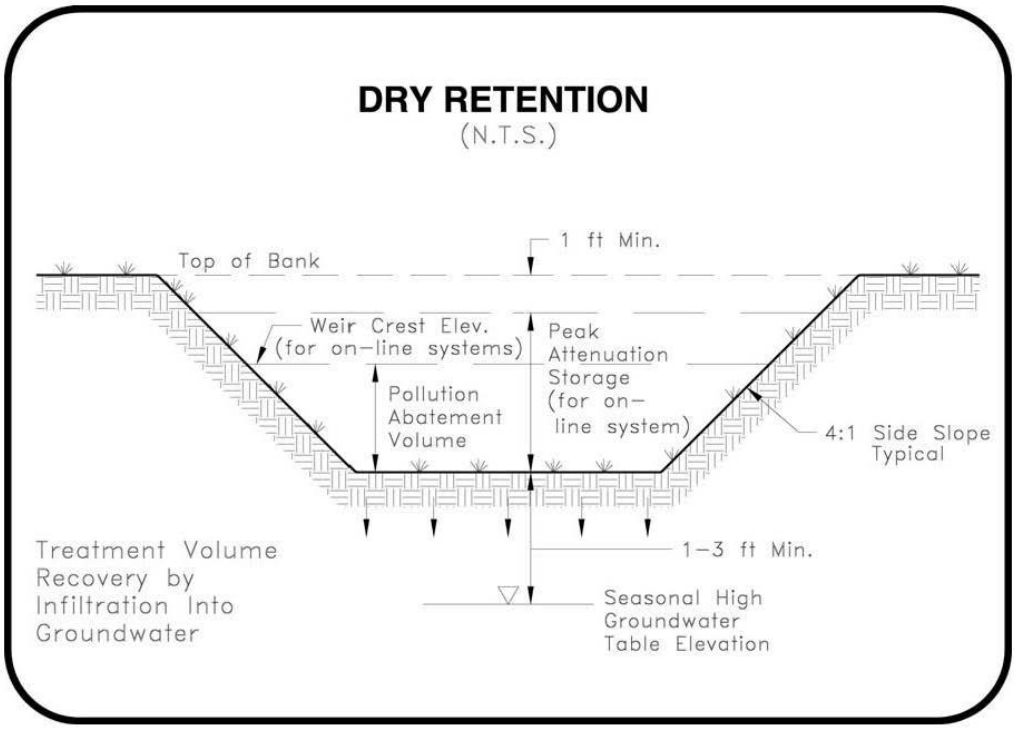

Figure 4-2. Schematic of a Dry Retention Facility
Source: ***http://www.dep.state.fl.us/water/nonpoint/docs/nonpoint/SW_TreatmentReportFinal_71907.pdf***

Wet Detention – A surface water impoundment with a natural or man-made outfall capable of draining the impoundment water surface elevation to its pre-stormwater event levels within 3 to 5 days after the event, and the bottom elevation below the dry season groundwater level causing the impoundment to contain water at all times.

Dry Detention - A surface water impoundment with a natural or man-made outfall capable of draining the impoundment to its pre-stormwater event levels within 3 to 5 days after the event, and with a bottom elevation above the wet season groundwater level causing the impoundment to contain water for short durations following wet weather and be completely dry during most times of the year.

Dry Season Groundwater Level – The dry season groundwater level is average seasonal low surficial groundwater elevation that is expected to occur during a year with typical or average rainfall.

Wet Season Groundwater Level – The wet season groundwater level is average seasonal high surficial groundwater elevation that is expected to occur during a year with typical or average rainfall.

Estimating the wet and dry season ground water levels is not an exact science and is based on interpreting best available site specific data and field observations.

Stormwater Management Alternatives

The ultimate pathway for the water that enters into the lagoon depends on the ability to discharge water from the lagoon. Currently, the lagoon acts as a wet stormwater retention basin, because all water that flows into the lagoon is retained until the lagoon water either infiltrates into the soil or evaporates. Historically, the lagoon always contains some water. The existing lagoon stays wet all year because the water surface elevation in the lagoon reaches equilibrium with the local groundwater surface elevation. Therefore, the existing lagoon is categorized as a wet retention basin.

After a major stormwater drainage event, such as the January 2013 event observed during the preparation of this study, the lagoon becomes totally full with water. In the event of multiple, successive stormwater drainage events, which are expected to occur infrequently, the stormwater retention basin will overflow the top of its side slopes because the retention basin does not have enough capacity to store the runoff from more than one major event. An emergency response plan to provide temporary pumping is needed to be able to quickly remove large volumes of water from the retention basin before flooding causes damage to neighboring property.

The existing lagoon can be converted to operate as a stormwater detention basin whereby stormwater runoff is temporarily detained before being released. By definition, a detention basin must be able to remove accumulated water within 3 to 5 days after the precipitation event, to make the detention volume ready and available for the next stormwater drainage event.

In addition to considering the two options to convert the lagoon to a detention basin, an alternative has been developed to convert the existing lagoon to dry retention.

For the purposes of this study, both the wet and dry season groundwater levels are estimated based on a review of historical data, local knowledge, field observation, and engineering judgment. The dry season groundwater level is estimated to be elevation 664.4 meters asl. The wet season groundwater level is estimated to be elevation 665.0 meters asl. These values may be used as the basis of future design of improvements; however, these values are recommended to be revisited to consider any new or additional data that may become available in the future.

Early in the study, the project team debated considerably about the possibility of a perched water table that could potentially interfere with infiltration rates and the time it would take for the water levels in the stormwater basin to recover after a substantial rainfall event. The team considered geotechnical borings to determine the presence an aquaclude, which is a layer of soil with very low permeability that prevents the

downward migration of groundwater. The team also considered installing piezometers to monitor the difference between surficial and deeper groundwater levels, if any, and to observe the inter-relationship between these groundwater surface levels and the water levels in the lagoon following a major stormwater runoff event.

In the end, the Project team elected to do neither, because data from the January 2013 rainfall event benefitted this study and provided valuable data. This event allowed the project team to observe the impoundment being filled rapidly in a couple of days and then gradually receding over the next few months. Based on this observation, the infiltration rates do not appear to be negatively impacted by a perched water table. Future investment in additional geotechnical investigation and monitoring groundwater levels in piezometer wells is not expected to yield any significantly different information and is therefore, not recommended or needed.

4.1.1 Detention

The existing lagoon can be converted to a detention basin by adding a means to drain the water from the lagoon. Alternatives for draining water from the lagoon include:

- Pumping to Zarqa River
- Gravity flow to Zarqa Riiver

Beneficial use of the water to irrigate the adjacent park offers a way to remove some of the water from the basin; however, the quantities removed for irrigation are not sufficient to completely drain a detention basin within 3 to 5 days after the major precipitation event.

For the wet detention alternative, the existing lagoon bottom remains unchanged. Converting the existing lagoon to dry detention will required additional action to backfill the lagoon until the bottom elevation is above the wet season groundwater surface elevation.

4.1.1.1 Pumping to Zarqa River

As presented previously, there is an existing pumping station that was intended to discharge large quantities of water from the lagoon to the Zarqa River. However, the existing pumping station is not operational because of theft and vandalism and is currently abandoned. Returning the abandoned pumping station to service will require a complete rebuild of all electrical and mechanical equipment and appurtenances.

Based on field observations, the only portion of the abandoned pumping station that remains are the concrete structure and some piping. Based on local knowledge, it is understood that the submersible pumps and fittings are still there; however, this could not be verified by field observations.

To return the pumping station into service, it is reasonable to expect that the pumps would either require refurbishing or be completely replaced. All electro-mechanical equipment, including cables, and boards, is missing and would need to be completely replaced.

In addition to the need to completely rebuild all the electro-mechanical equipment, returning the pumping station into service would require additional security

measures, including onsite security guards 24 hours a day, 7 days a week, which would add to the annual operating cost.

It is understood from local knowledge that the original pumping station included a steel pipeline from the pumping station to the Zarqa River. It is also likely that the existing pipeline could be intact; however, this could not be confirmed by field observations. Further investigation of the existing pipeline would need to be performed to confirm its suitability for use as an outfall pipe.

4.1.1.2 Discharge Water by Gravity to Zarqa River

Another way of discharging water from the lagoon to the Zarqa River is to restore the Marka Wadi to its pre-mining condition, allowing water to flow unimpeded (without restriction) from the area of the lagoon to the Zarqa River.

Restoring the wadi to its pre-existing or natural condition would require major excavation work involving huge quantities of earth and would cause major disruptions to homes, businesses, and infrastructure. Resolving land ownership issues would be difficult and would take a long time to resolve. For these reasons, restoring the wadi to its pre-existing condition would be too big and disruptive to be considered feasible, so this alternative is not considered feasible.

A more feasible alternative to restoring the wadi's natural flow path is to connect the lagoon to the Zarqa River by gravity drainage pipe. However,using open cut trenches to install the outfall pipe would have the same type of problems as restoring the wadi; therefore, it is not considered feasible.

A potentially more feasible alternative to open cut trenches is to tunnel over a distance of 800 to 1000 meters through natural and man-placed sediments that accumulated between the lagoon and the Zarqa River. A tunneling method that is well-suited to constructing a gravity outfall pipe in this application is Horizontal Directional Drilling (HDD). The feasibility of the HDD option is explored in more detail in subsequent sections of this report.

The difference in elevation between the bottom of the lagoon (elevation 670 m asl) and the Zarqa River (elevation 630 m asl) is approximately 40 meters of vertical drop. The ground elevation along a most-likely horizontal alignment is elevation 690 m asl at the highest point.

HDD technology requires excavation of several access pits and vertical shafts at intervals along the alignment to enable the tunneling process. For this application, the access pits and shafts would typically be approximately 30 meters deep, which is technically feasible.

There appear to be several potentially possible routes to tunnel from the lagoon to the Zarqa River. The length of tunnel is estimated to be 800 to 1000 meters. A total length of 1000 meters was selected for the cost estimate. The selected pipe is 500 mm diameter carbon steel.

4.1.1.3 Water Reuse

The lagoon captures stormwater runoff generated from significant rainfall events. It is conceivable that this catchment water can be tapped for irrigating the park facilities.

Reuse of properly treated wastewater is becoming more readily accepted and is of great interest in Jordan. Irrigation is often the preferred end-use for reclaimed wastewater, as it contains valuable nutrients and can replace using fresh water. Since the climate in the project area is semi-arid with relatively low rainfall, there is interest in using the lagoon water as a source of water to irrigate the surrounding park.

In 2008, GAM constructed Farah Park and planted trees and shrubs around the lagoon with the ability to irrigate using water from the lagoon. A quick field observation of some of the existing facilities to irrigate using lagoon water found the equipment vandalized and missing key electrical and mechanical components. The overall condition and operability of the existing local irrigation facilities are suspect and were not verified during the project.

Technically, the existing lagoon water quality does not meet Jordanian Standard JS893:2006 for water reuse to irrigate parks, playgrounds, and areas inside city limits. However, after improvements such as those recommended with this study, it is probable that the water quality will improve to a level that would make the water suitable for irrigation within the park.

The quantities and rate of water removed from the lagoon for reuse are too small to be considered an effective method to remove accumulated stormwater within the 3-to-5-day-period required for a detention basin. Therefore, the availability of water for reuse as irrigation water, either from a lagoon surface water or from the surficial groundwater aquifer, is considered a benefit; however, reuse for irrigation does not by itself represent a solution to resolving the problems of odors and other nuisances.

4.1.2 Dry Retention

In this alternative, the water in the lagoon will be effectively eliminated. The impoundment will be dry most times of the year. Water that accumulates in the impoundment after substantial rainfall events is expected to gradually infiltrate into the surficial groundwater aquifer as water surface levels recede to its pre-rainfall dry condition within one to three months.

The existing impoundment will be filled with porous material with the purpose of improving infiltration with the objective to eliminate the presence of standing water most times of the year.

It is important to specify that the backfill materials be porous to enhance infiltration and recharge. Porous backfill materials can be clean sand, rock, or rubble from construction and demolition debris, which have a very low content of fine sands and silts. Washing the sand, rock, and rubble may be necessary to remove fines before the material is acceptable for use as a porous backfill material.

4.1.2.1 Evaluation of Stormwater Management Alternatives

The principal benefit of a dry detention/retention basin is that odors and other nuisances caused by stagnant water are substantially reduced because the presence of standing water is eliminated most of the time.

Retention basins provide a secondary benefit of enhancing groundwater recharge and making more water potentially available for reuse as irrigation water, either from a lagoon surface water or from the surficial groundwater aquifer.

The principal benefit of converting the existing lagoon to a detention basin is reduced risk of flooding. Having a means to drain the lagoon reduces the risk of flooding after infrequent multiple and successive major drainage events and eliminates the need for a contingency emergency outfall plan.

The cost to implement an outfall necessary to convert the existing lagoon to a detention basin is excessive compared to the cost of providing a contingency emergency outfall plan. As such, the detention basin approach is no longer considered for the purpose of this analysis.

The problems associated with the existing basin will be addressed by converting the existing wet retention lagoon to a dry retention basin. As such, the selected stormwater management alternative for cost analysis is dry retention.

4.2 Alternatives to Address Contributing Factors

In Situ Lagoon Water Treatment by Mechanical Aerators
This alternative considers improving lagoon water quality by adding mechanical aerators and a submerged rock filter as a way to improve the poor water quality and discourage growth of excessive algae.

Mechanical aerators add dissolved oxygen to the lagoon and provide partial mixing as a way to increase the capacity of the lagoon to assimilate the organic pollutant load and better control the growth of algae. Over an extended period of time, an aerated lagoon is expected to gradually transition into freshwater pond capable of supporting fish and wildlife with minimal odors and nuisances.

For the purpose of this alternative, a partially-mixed lagoon approach is selected as more suitable for the Russeifah lagoon. Four floating mechanical surface aerators are proposed to be installed in the deepest parts of the lagoon.

In the event that the abandoned effluent pumping station is to be refurbished and placed back into service, then a rock filter is proposed to be located between the mechanical aerators and the intake channel to the pumping station. The submerged portion of the rock filter is intended to further reduce organic loading (BOD) by trapping suspended solids and algae. The proposed rock filter system is comprised of clean limestone aggregate of a size ranging from 2 to 5 cm with no silt or sand. The top of the rock filter is planned to be at an elevation of 669.5 m which is one meter above an assumed design maximum water level of 668.5 m.

Additional security will be needed to protect the equipment from vandalism and theft if this alternative is selected.

4.2.1 Diversion of Low-Flow Storm Water

During several site visits, water observed entering the Lagoon came from a number of different sources. These include storm water, surface drainage during the wet season winter months, and illegal discharges of raw wastewater within the storm water network at all times during the year.

The illegal dumping of wastewater into the storm water network in most cases was due to:

1. Illegal sewer house connections to the storm water network, and
2. Clogged sanitary sewer drainage pipes within the Hittin Camp area causing sewer manholes to overflow with raw sewage that eventually enters the storm water drainage network and discharges to the lagoon.

The concept of this alternative is to capture raw sewage overflowing manholes before it reaches the lagoon and re-route it back to the sanitary sewer system somewhere downstream of the blockage.

The Project team reviewed available sewer maps to locate potential connection points, then conducted field observations and approximate measurements of pipe inverts for potential cross-over connections from the stormwater drains to the sanitary sewer drains.

4.3.3 Preliminary Treatment and Bioswale

This alternative combines basic, easy-to-maintain water treatment techniques with a "green infrastructure" approach using a sustainable bioswale. Since options involving electro-mechanical equipment present security concerns, the preliminary treatment works are selected with no moving parts with heavy-duty durable construction to protect it from theft and vandalism.

Improvements are proposed at two locations: at the West Culvert discharge and at the South Culvert discharge. For the West Culvert, the components are proposed on the downstream end of the culvert and include a special low-flow diversion structure, a grit chamber, a trash bar rack and dumpster for the sreenings, and a bioswale. At the South Culvert, improvements are proposed on the upstream end of the culvert and consist of a new concrete endwall, trash bar rack, and a dumpster for the screenings. At both locations, a paved access path is proposed to wheel the dumpster to the nearest road for commercial trash collection.

A bioswale is also proposed to use natural vegetation that requires no equipment; but, does require the almost daily attention of a groundskeeper, such as the landscape caretaker that works at the adjacent Farah Park. With the bioswale, this alternative is considered a form of "green infrastructure" by relying on natural vegetation and underlying soils to capture pollutants from the intermittent low flows of raw sewage that would otherwise flow directly into the lagoon. There is no need for electrical power for this alternative.

Bioswales are commonly accepted and well-known as offering a cost effective alternative for capturing pollutants from stormwater drainage.

The Project team observed and measured dry-weather flows discharging to the Lagoon from the west culvert. The flow of raw sewage into the stormwater drainage system that reaches the lagoon is intermittently recurring with a relatively small flow which represents a very small amount of the full capacity of the stormwater drainage pipe. Another source of water that reaches the lagoon is water that overflows from storage tanks that become full during times when water is supplied from the municipal water distribution network.

Similar to most municipal areas of Jordan, municipal water is rationed. For this area, WAJ supplies water through the underground water distribution network two days per week, on Thursday and Friday. On the other days, the system is valved off and no water is available from the network.

Two measurements were made of the flow from the west culvert during both rationing and non-rationing days. Results shows that the average flow was approximately 69 m^3/day in the rationing days and 17 m^3/day in the non-rationing days. Both flows are considered low-flow conditions relative to the full capacity of the stormwater drainage pipes at the West Culvert.

In this alternative, these low flows will be diverted to the vegetated bioswale channel. During significant rainfall runoff events, the flows will be substantially greater, and almost all of the rainfall runoff water discharged from the West Culvert will bypass the flow diverson to the bioswale, and will flow through the grit chamber, trash rack and over an outlet weir before reaching the lagoon. A layout of the proposed west culvert structure is shown in the drawings in Appendix A.

The bioswale is designed with a trapezoidal-shaped cross-section, bottom width of 1 meter, and an overall length of 250 meters along an alignment that parallels the landscaped area inside Farah Park. The cross-section side slope of the bioswale is 3h: 1v. The exact location and extent of the proposed bioswale can be seen in the drawings in Appendix A. A typical bioswale cross-section and a profile is shown in the drawings in Appendix A.

Native plant species were chosen to vegetate the bioswale and include native riparian and perennial deep rooted plants. Of these, high stature vegetation such as reed Canarygrass (Phalaris arundinacea) or common reed (Phragmites australis) is recommended to occupy the center of the bioswale. For the shoulders, shrubby vegetation (Atriplex halimus) or a showy forb (Achillea fragrantissima) is recommended to stabilize the soils of the shoulder and extract deep water through the extensive root systems. Strict measures are highly needed to prevent trespassing to the established vegetation.

Native plant species were recommended for the bioswale to ensure sustainability because these species of plants are well-adapted to local climate and rainfall patterns, and are resistant to local pests and diseases. This reduces the maintenance costs required to keep the established vegetation cover in the bioswale effectively functioning.

In preparing the bioswale soil for planting, compost and fertilizers are recommended to be mixed into the soil to improve soil organic content, moisture retention, and provide essential nutrients necessary to promote robust growth of the selected plant species. Further details on the types of proposed bioswale vegetation can be found in a separate report titled “Suggested Vegetation for the Bioswale at Farah Botanical Garden in Russiefah, Jordan, May 2013” as provided in Appendix B.

A schematic diagram illustrating this treatment technology is presented in Figure 4-3. A photograph of an actual operating bioswale can be seen in Figure 4-4.

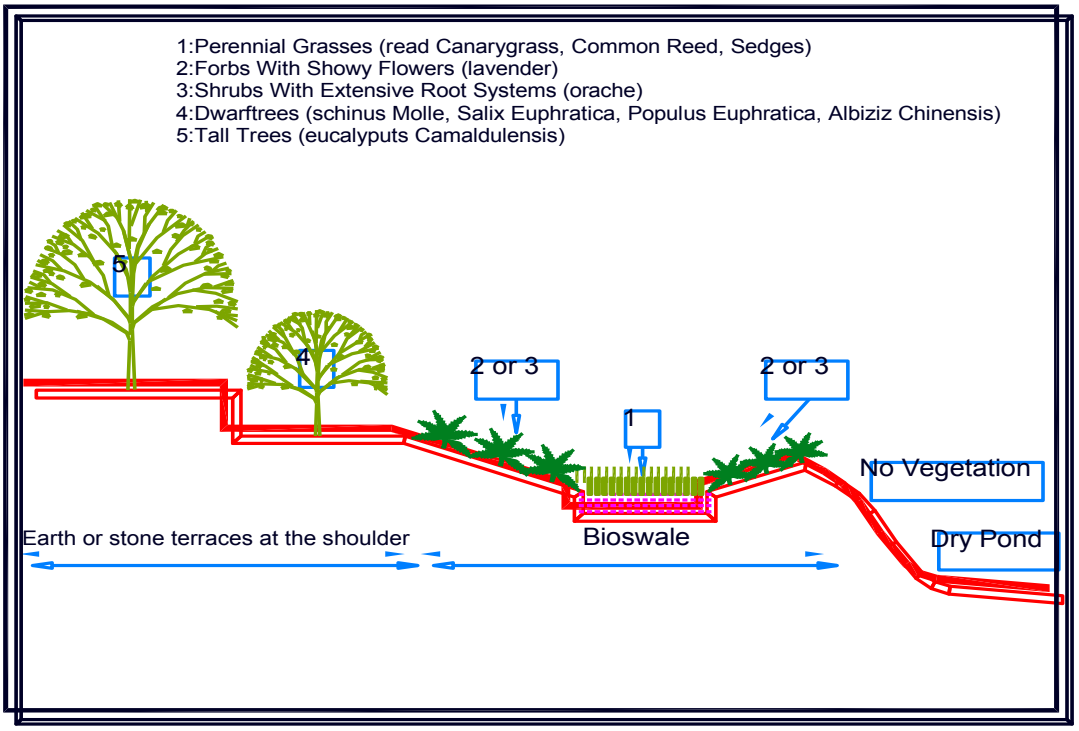

Figure 4-3: Schematic Diagram of the Proposed Bioswale

Figure 4-4 Photograph of a typical bioswale cross-section for stormwater management

The trash bar racks are designed to prevent the entry of large trash and debris into the lagoon. The horizontal grit chamber is designed to remove stones and coarse sand. The horizontal velocity in the grit chamber is controlled by a broad-crested overflow weir as can be seen on in the drawings in Appendix A . These components also an be seen in the in the drawings in Appendix A. The top of the screen trash bar rack within the grit chamber will have a platform to make it easier for a maintenance person to rake the trash that collects on the bar rack into the dumpster. The manually-collected trash will then be placed in the dumpster which will be pushed up the proposed paved pathway to the road as shown in in the drawings in Appendix A. Material that accumulates in the grit chamber must be manually cleaned by a maintenance person using a shovel and bucket.

A layout and section view of the proposed trash rack on the upstream side of the South Culvert is show in in in the drawings in Appendix A.

4.2.1.1 Evaluation of Alternatives to Address Contributing Factors

In the past, vandalism and illegal salvaging of electro-mechanical equipment at this site caused all of the equipment at the Lagoon site to be rendered inoperable soon after the original installation. Investing in additional electro-mechanical equipment at this site is an invitation for a repeat of the previous failure. Mechanical aeration plus the additional security measures to safeguard the equipment are also expected to cost considerably more in capital and annual costs as compared to a bioswale. These considerations make the alternative to add floating mechanical aerators to the lagoon as too costly and unlikely to succeed and is therefore eliminated from further consideration.

The option to divert low-flow from the stormwater sewer system to the sanitary sewer system is eliminated from further consideration because the opportunity for a gravity interconnect is not physically possible. Measurements conducted by the project team found the storm sewer pipe to be approximately 1.5 meters lower than the adjacent sanitary sewer pipes at the most favorable location for an interconnect. That difference in pipe inverts made an interconnection from the storm sewer to the sanitary sewer physically impossible without pumping. In addition, it would be difficult to overcome objections by WAJ officials to interconnect a stormwater drain to a sanitary sewer.

The proposed bioswale can effectively remove pollutants from the incoming low flows such as from sanitary sewer overflows and from the initial flush of stormwater runoff. Bioswales reduce loads of BOD_5, COD, nitrogen, phosphorus and suspended solids, require little maintenance, and with proper attention, can remain effective over long periods of time. As an additional benefit, bioswales enhance infiltration that allows more water to recharge local groundwater resources. Although not as important at this location, bioswales can also attenuate peak flow which reduces hydraulic loads on downstream stormwater drainage systems.

The proposed trash bar racks at both the west and south culverts will effectively remove a source of pollutants to the stormwater basin by collecting the materials before they enter the basin. The grit basin proposed on the West Culvert will effectively remove polluted sediments. Collected materials can be properly disposed. Removal of grit, trash, and debris before the stormwater reaches the basin will reduce the pollutant load in the sediments and will improve the overall aesthetic beauty of the area as a park.

For the cost analysis, the combination of a grit chamber and trash rack with a low flow diversion to a bioswale is the alternative selected to address factors contributing to the source of odors and other nusiances in the lagoon.

4.3 Work Elements Common to All Alternatives

There are elements of work related to restoring damaged, crumbling, and neglected public infrastructure that are common to all alternatives. These are:

4.3.1 Rehabilitate the sanitary sewer drainage network in Hittin Camp

Rehabilitation of the wastewater network in Hittin Camp is recommended as an essential infrastructure renewal and replacement activity common to all alternatives.

The sanitary sewer drainage network serving Hittin Camp residential area, which is situated within the lagoon's stormwater catchment area, needs to be thoroughly cleaned and rehabilitated to restore the integrity of the sanitary sewer network. The recommended sanitary sewer activities include:

- Replace missing or retrofit existing manhole covers with covers designed to deter theft, such as cast-iron covers filled with concrete making them too heavy to lift and transport easily, or special bolt-down covers that require a special tools so locals cannot remove the covers.
- Manually clean the manholes
- Clean sewer lines by using commonly available vacuum trucks and trenchless sewer pipe cleaning and video inspection equipment.
- Make point-repairs to broken pipes and offset joints that obstruct flow.
- Upsize existing sewer pipes that are determined to be too small.

Following an aboveground-level field inspection of the wastewater network in Hittin Camp, it was evident that the sewers need to be cleaned, and missing manhole covers need to be replaced. Bulky waste items were found stuffed inside open sewer manholes. At present, the Water Authority of Jordan (WAJ) cleans and maintains sanitary sewer lines by hiring sewer maintenance contractors. However, it appears that the sewer lines in this area do not appear to have been cleaned before and are suffering from neglect and abuse. Based on contact with WAJ personnel responsible for sewer cleaning, it is understood that WAJ has no funds available to allocated for cleaning the sanitary sewers in this area.

A recent review of the as-built sewer lines at Hittin Camp has shown that there are 40 km of pipe lines and around 1,700 manholes. According to WAJ officials almost one third of manhole covers are recommended to be changed while the entire network needs to be cleaned.

4.3.2 Replace Concrete End Wall Structures and Restore Slopes

There are two missing endwalls that need to be replaced. The outlet end of the double culvert at the south culvert is missing and is recommended to be constructed. The end wall on the outlet of the west culvert was demolished in the January 2013 rainfall event and is recommended to be replaced as an integral part of the proposed low-flow diversion structure, grit chamber, and trash rack structure. The existing side slopes around both the west and south culverts have been badly damaged by erosion from previous stormwater drainage events and need to be restored to prevent undermining of the adjacent concrete perimeter wall and paved public road.

4.3.3 Contingency Emergency Overflow Plan

Developing contingency plans for managing excessively high water levels in the lagoon is needed to avoid flooding and associated damage to neighboring property. Options may include pumping or siphoning to the nearest downstream manhole.

There is an abandoned sanitary sewer manhole near the northeast end of the lagoon that, based on local knowledge, was connected to the downstream gravity sewer system but has since been blocked. It may be possible to easily convert this manhole into a peak stage overflow structure simply by restoring the connection from this manhole to its previous point of connection to the downstream sanitary sewer network. The top of the manhole structure was measured by the project to have an elevation of 671.70 meters asl, as shown in Figure 4-5. The feasibility of using the abandoned manhole as an emergency overflow structure needs further field investigation and consultation with WAJ.

Figure 4-5. Elevation o manhole structure

4.3.4 Remove Sediments from Bottom of Lagoon

The lagoon is recommended to be dredged to remove contaminated sediments that have accumulated on the bottom of the lagoon. Sediment removal is considered an essential element of an integrated implementation plan to remediate the site. This activity entails completely emptying all the water from the Lagoon by pumping the entire volume of water to the nearest sewer manhole, then allowing the remaining soft, wet sediments to naturally dry while exposed to the sun and wind during the non-rainy season.

The lagoon can be dewatered by pumping the lagoon water to the nearest manhole which is located on the 800 mm diameter main sewer trunk line approximately 50 meters east of the lagoon. Once the bottom sediments are dry, the dried material can be mechanically removed and hauled to the nearest landfill for disposal. The depth of sludge is assumed to be 30 cm across the deepest areas of the lagoon.

5.0 ECONOMIC ANALYSIS

Resolving the odors and other nuisances generated from the existing stormwater retention lagoon requires an integrated approach consisting of several elements. Individually, each element alone will not be sufficient to address the problems.

An economic analysis was performed for an integrated solution consisting of the following:

- Convert existing wet retention lagoon to dry retention basin
- Capture and divert incoming liquid pollutants, trash, and debris for proper treatment and disposal
- Complete public infrastructure work elements common to all alternatives

The total cost for the proposed integrated plan is USD $ 1,043,823. The majority of the total estimated cost is to rehabilitate the existing sanitary sewer network in the surrounding area. A summary of the estimated costs are shown in Table 5.1.

Table 5-1 Planning-Level Implementation Cost Estimate

Description	Total (USD)
Bioswale	35,600
West Culvert Outlet Endwall, Diversion Structure, Grit Chamber, and Trash Rack	32,835
South Culvert Inlet Endwall with Trash Rack and Outlet Endwall	18,888
Convert wet retention lagoon to dry retention basin	295,500
Rehabilitate Sanitary Sewer Network in Hittin Camp	661,000
Total (USD)	**1,043,823**

Of that total, USD $394,723 is to address lagoon odor and nuisances using the proposed bioswale and trash racks.

For comparison purposes, the cost to convert the lagoon into a partially-mixed aerated wastewater treatment pond assuming mechanical surface aerators and a rock filter, as an alternate to the proposed bioswale and trash racks, was estimated to be about $750,000. This wastewater treatment pond alternative is estimated to cost nearly twice as much as the bioswale and trash rack alternative.

A detailed cost estimate of the proposed integrated plan is provided in Appendix C.

6.0 CONCLUSIONS AND RECOMMENDATIONS

The existing lagoon resulted from decades of indiscriminate dumping of industrial waste materials and liquid waste into what was previously a natural drainage wadi, namely Wadi Marka. Waste continues to be dumped into the wadi today. Upstream of the walled lagoon area, construction and demolition materials are delivered and dumped into what's left of the natural wadi by large trucks. Local residents openly litter and throw all kinds of municipal solid waste into the wadis and open drainage ways. This is a significant problem for keeping pollutants out of the retention pond.

The recommended integrated approach consists of a mix of passive improvements that together will mitigate the problems of odors and nuisances, such as mosquitos and bad odors, generated from the existing stormwater retention lagoon. Each component of the proposed approach was carefully selected to address the uncontrolled pollution of the stormwater retention lagoon caused by a prevailing practice of careless waste disposal. Each component was selected based on over-riding criteria for durability, ease of maintenance, vandal- and theft-proofing, and ultimately, sustainability.

Each component by itself is not sufficient to address the problems. All components were selected to work together to achieve the desired results.

The recommended action is to convert the wet retention pond to a dry retention pond, add passive equipment and structures to address contributing factors, and target the cleaning and rehabilitation of a failing sanitary sewer network located within the stormwater lagoon's catchment area. This integrated approach is recommended because of its low cost, economic sustainability, and simplicity, all factors that fit well within the local socio-economic context. The actions are detailed on the drawings provided in Appendix A.

When considering the benefits of the proposed improvements to the lagoon and surrounding park, it is important to recognize the huge potential for economic development and raising public awareness about environmental management. For example, the demand for clean locally-sourced material to fill the lagoon can create jobs and while also cleaning-up the wadis. By creating a market demand for recovered waste concrete, rock, block, and ceramic materials currently disposed as waste in the nearby wadis, the lagoon improvement project could give an entrepreneur a start for a new business that creates jobs in mining, cleaning, and selling recovered rubble as a valuable commodity.

The local community needs to become involved to ensure the viability of the proposed improvements to their neighborhood park. The children use and treasure the soccer field with artificial turf that exists inside the park. Creating that same appeal for the rest of the park facilities would tremendously enhance the positive outcomes of the pollution control strategies proposed for the park. A public awareness campaign is recommended to emphasize the value of protecting the environment and recognizing that everyone has a role in maintaining a healthy and beautiful park. The opportunities are abundant; for example, interest could be generated if the local community leaders teamed up with the local school (built by USAID) to adopt this small park land as their protected "natural biosphere."

Realistically, it may take another generation or two before this park will see people enjoying a tranquil, peaceful urban park setting complete with baby strollers, children

playing on playground equipment, more soccer fields, shade trees and benches, birds, and a fishing pond. The local community may have other ideas for what type of park they will treasure most. But before any dreams and visions can start to take shape, the public must become enlightened about the “Do’s and Don’ts” that can result in a cleaner environment for their park and their community.

REFERENCES

Design Manual: Constructed Wetlands and Aquatic Plant Systems for Municipal Wastewater Treatment (USEPA, 1988).

Development of Phosphate Mining Concession Area in Russeifah, RSS, 1995, (RSS, 1995).

Water Shortage in Jordan - Sustainable Solutions, 2009, Hadadin, N., Qaqish, M. Akawwi, E and Bdour (Hadadin, Qaqish, et al., 2009).

Hudson, K, (2000), Shared Water Resources in the Jordan River Basin.

National Water Master Plan (2004), Vol 4, Surface Water Resources.

Restoration of Pepsi Pond Site in Russeifah, 2006. Conceptual Design Report (MWI/JVA, 2006).

Russeifah Phosphate Mining Site Environmental Assessment, T, 2006, Tolaymat T. (USEPA/USAID, 2006).

Evaluation of Current Stormwater Design Criteria within the State of Florida, Florida Department of Environmental Protection, June 2007, prepared by Environmental Research & Design, Inc. (Source: http://www.dep.state.fl.us/water/nonpoint/docs/nonpoint/SW_TreatmentReportFinal_71907.pdf)

Appendix A:

DRAWINGS

Appendix B:

REPORT ON: SUGGESTED VEGETATION FOR THE BIOSWALE AT FARAH BOTANIC GARDEN

SUGGESTED VEGETATION FOR THE BIOSWALE AT FARAH BOTANIC GARDEN IN RUSSEIFEH, JORDAN

Prepared by

Dr. Mahfouz Abu-Zanat

For

Engicon, Jordan

May 2013

Suggested Vegetation for the Bioswale at Farah Botanic Garden in Russeifeh, Jordan

1. Introduction

Burket Al-Pepsi as locals used to name it is a real health-problem for both the visitors of Farah Botanic Garden in Russeifeh and the community surrounding the Garden. In the past, the floodwater during winter and waste water used to be funneled to the area and then drained naturally outside the watershed. The disposal of mining tailings combined with the encroachment of urbanization into the watershed restrained the natural drainage of water entering the area and created a pond, formerly known as *Burket Al-Pepsi,* which is characterized by greenish algae-laden water that generates bad odor. This unpleasant water body becomes a favorable habitat for the proliferation of insects especially the mosquitos.

Engicon was contracted for finding innovative solutions for the pond's problem. Field visits to the site and engineering work resulted in the design of a trapezoid structure, vegetated swale or bioswale, to convey the wastewater coming out of the culvert to seep slowly in this structure. The dimensions of the bioswale are 0.5 m wide and 250 m long at one shoulder of the pond. The main objective of this bioswale is to improve the quality of the incoming wastewater to the standards that permit its reuse for irrigation at the site or discharge it through pumping outside the area into the nearby wadies.

The Terms of Reference that were assigned to the consultant included the following:

- Suggestion of suitable plants to be grown in the bioswale (in the center and shoulders) to improve the quality of incoming wastewater.
- Suggestion for the preparation of planting and irrigation to establish sustainable vegetation cover in the bioswale.

The consultant joined with Engicon's Team (Ioana Popescu, Senior Water and Wastewater Engineer; Dr. Eyad Batarseh, Task 3 Leader; Engineer Omar Abu Taha; and Engineer Atheer Dabaneh) visited the site (*Burket Al-Pepsi*) on Thursday 23 May 2013. The Team briefed the consultant about the problem of the site and the justification for the suggested bioswale design. The consultant was informed about the expected landscape of the pond "the pond's water will be pumped outside the site and the accumulated sludge will be removed, the dried pond will be paved with gravel and a thin layer of soil will be added to improve soil water infiltration to avoid future accumulation of floodwater at the site". Therefore, the focus is how to improve the quality of the incoming wastewater using bio-filtration for proper reuse in irrigation.

2. General guidance

2.1. Vegetation

The selection of plant species to vegetate the bioswale should be in harmony with the Jordanian Biodiversity Strategy which appreciates the use of native plant species. Native riparian and perennial deep rooted plants are highly recommended. These indigenous plant species are adapted to local climate and rainfall patterns, and resistant to local pests and diseases. These characteristics of native plants will reduce the maintenance costs to keep an effective functioning of the established

vegetation cover in the bioswale. The suggested plant species should tolerate salinity and adapted to wet and dry conditions during the year. In addition, the selected plants for the bioswale should not be harmful to human (poisonous or causing allergy). It is important to note that the vegetation of the center of the bioswale is the most important component of the entire structure which will be in direct and continuous contact with the incoming wastewater.

2.2. Soil preparation

The excavation of bioswales involves the removal of top soil which harbors the nutrients that are needed by the soil microbiota and plants. In this case, planting (seeds or seedlings) of the desired species is performed on the sub-soil which contains very low amounts of organic matter that cannot support a healthy stand of vegetation cover.

The following are important during the preparation of planting site:

- Ripping and plowing of soils of the bioswale (in the center and shoulders) to reduce soil compaction to ease the development and penetration of plants' roots. The depth of plowing is around 25-40 cm.
- If the topsoil of bioswale is removed during excavation, compost should be incorporated to improve soil organic matter. Abad quality compost will defeat the purpose of the bioswale.
- Nitrogen fertilizers should be mixed with the soils to obtain a rapid and robust growth of selected plant species to compete with weeds.

2.3. Irrigation

The incoming wastewater will be continuously seeps through the bioswale after the establishment of vegetation. Before that, irrigation frequency of 2 to 3 times per week is adequate to keep the emerged seeds or transplants in good condition.

Water management at the site should be planned carefully from the beginning. A portion, to be estimated by engineers, of the drained water from the bioswale should be stored in tanks to irrigate the established trees and shrubs in Farah Botanic Garden. The density and cumulated biomass of the perennial vegetation of the bioswale will increase substantially and so the irrigation requirement. The quality, especially the salinity, of both the incoming wastewater and the discharged reclaimed water should be monitored at least seasonally. In case the amount of reclaimed water is increased and cannot be reused at the site, a setup for pumping the surplus of water should be arranged.

3. Suggested plant species for the bioswale

It is worth noting that the bioswale design was based on the collected data pertaining to the volume and rate of water coming into the site via the culvert taking into consideration the floodwater during winter. The width of the suggested bioswale is narrow (0.5 m). There is a probability that sloughing of shoulder's soil will deposit in the center of the "narrow" bioswale and consequently obstructs water seepage knowing that the incoming water has low flow. In addition, the size of the vegetated

area (0.5 m x 250 m = 125 m^2) may be not enough or effective to improve the wastewater quality up to the planned or recommended standards. If engineering work permits, it is suggested that the width of the bioswale may increase to 1 m.

Because of the narrow width of the bioswale, the recommended vegetation should be of high stature such as reed Canarygrass (*Phalaris arundinacea*) or common reed (*Phragmites australis*) to compensate for the small planting area; these two species will occupy the center of the bioswale. For the shoulders, shrubby vegetation (*Atriplex halimus*) or a showy forb (*Achillea fragrantissima*) is recommended to stabilize the soils of the shoulder and extract deep water through the extensive root systems. The distance between the upper boundary of the bioswale and the concrete wall will be shaped into 2-3 terraces and planted with dwarf and tall trees (Fig 1).

Table 1 summarizes the main characteristics of the suggested plant species to vegetate the bioswale at Russeifeh site. The majority of the suggested species produce forage of good quality. Strict measures are highly needed to prevent trespassing to the established vegetation.

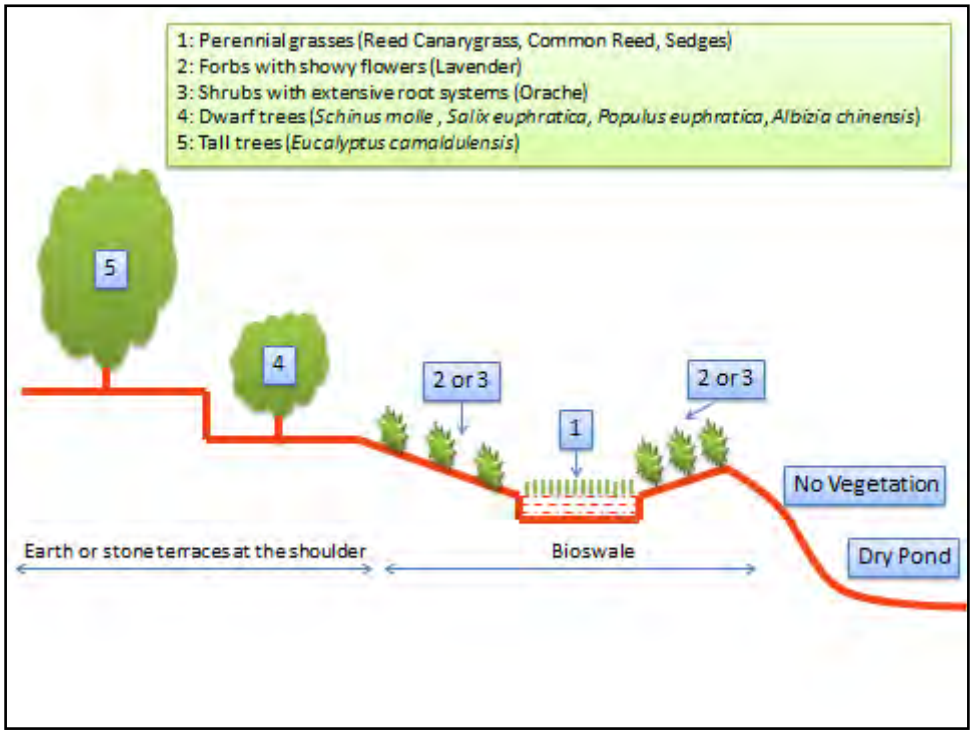

Figure 1. Suggested plants for the bioswale at Farah Botanic Garden in Russiefeh.

Table 1: Main characteristics of suggested plants for the bioswale at Farah Botanic Garden in Russiefeh.

Location at Bioswale	Common Name	Latin Name	Growth Habit	Growth Habitat	Salinity Tolerance
Center	Common Reed	Phragmites australis القصيب	Grass	Riparian or wet lands	Low
	Reed Canarygrass	Phalaris arundinacea حشيشة فلارس	Grass	Riparian or wet lands	Low
	Buffelgrass	Pennisetum divisum	Grass	Moist habitat	Moderate
	Bermuda grass	Cynoden dactylon نجيل	Grass	Moist habitat	Moderate
	Kentucky bluegrass	Poa pratensis القأ الأزرق	Grass	Moist habitat	Moderate
	Sedges	Juncus maritimus	Grasslike	Riparian or wet lands	High
	Rushes	Carex hispida	Grasslike	Riparian or wet lands	Moderate
	Horsetail knotweed	Polygonum equisetiforme	Forb	Riparian or wet lands	Moderate
Shoulder	Lavender or Yarrow	Achillea fragrantissimia القيصوم العطري	Forb	Banks of intermittent water courses	Moderate
	Orache	Atriplex halimus القطف الملحي	Shrub	Diverse habitats	High
Terraces	Silk tree	Albizia chinensis(D-M) اللبخ	Tree	Moist soils	High
	Salix	Salix euphratica (D) الصفصاف الفريتي	Tree	Riparian or wet lands	Low
	Pepper tree	Schinus molle (D-M) الفلفل	Tree	Moist soils	Moderate
	Poplar	Populus euphratica (M) الحور الفريتي	Tree	Riparian or wet lands	Low
	Red Gum	Eucalyptus camaldulansis (T) الكينا	Tree	Riparian or wet lands	Moderate

D: dwarf < 15 m or M: medium 15 m or T: tall > 15 m

The plant species that are highly recommended for the bioswale are:

- Common reed (*Phragmites australis* القصيب) for the center of the bioswale (No. 1).
- Lavender (*Achillea fragrantissimia* القيصوم العطري) or Orache (*Atriplex halimus*) for the shoulders of the bioswale (No. 2 or No. 3).
- Pepper (*Schinus molle* الفلفل) and silk (*Albizia chinensis* اللبخ) trees for the lower terraces adjacent to the bioswale shoulder (No. 4).
- Red gum (*Eucalyptus camaldulansis* الكينا) for the upper terraces (No. 5).

Cost estimates of the above suggested plants for the bioswale are detailed in Table 2. The transportation cost is around JD 35-40 for Diana pickup with capacity of 2 tons (1000-1500 plants per trip).

Table 2: Cost estimates of suggested plants for the bioswale at Farah Botanic Garden in Russiefeh.

Plant species	Plant Material	Cost Estimate (JD per unit)	Required Spacing per Unit	Required Area per Unit (m^2)	Pitting Cost (JD per Unit)	Planting Cost (JD per Unit)	Total Cost (JD per Unit)
القصيب	Cuttings	0.15	0.20 m x 0.20 m	0.4	0.1	0.20	0.45
القيصوم العطري	Transplants	0.25	1 m x 1m	1.0	0.2	0.20	0.65
القطف الملحي	Transplants	0.25	1.5 m x 1.5m	2.25	0.2	0.35	0.8
الفلفل	Transplants	0.5	5 m x 5 m	25	0.3	0.5	1.3
اللبخ	Transplants	0.5	5 m x 5 m	25	0.3	0.5	1.3
الكينا	Transplants	0.5	5 m x 5 m	25	0.3	0.5	1.3

Phragmites australis القصيب

Achillea fragrantissimia القيصوم العطري

Achillea fragrantissimia القيصوم العطري

Atriplex halimus القطف الملحي

Schinus molle فلفل

***Albizia chinensis* للبخ**

***Eucalyptus camaldulansis* لكاينا**

Eucalyptus camaldulansis الكاينا

Appendix C:

COST ESTIMATE

Table C.1 - Lagoon Improvements

Item No.	Description	Unit	Quantity	Rate (USD)	Total (USD)
1	Bioswale				
1.1	Excavation and Backfilling : Excavations from natural or reduced levels (which is lower) in any kind of soil, concrete or asphalt, trees or stonewalls ...etc. to the required depth and dimensions and as per drawings and specifications. Price to Include back-filling in (200 mm) thick layers, watering, compacting to 95% according to the modified field density test using suitable approved excavated materials as per specifications	m^3	200	10	2,000
1.2	75 mm thickness 16 mm Washed rock for Drainage	m^2	250	3	750
1.3	150 mm thickness Gravel	m^2	250	3	750
1.4	Soil(thickness as per drawings)	m^2	600	7	4,200
1.5	Vegetation in the channel and side slopes (as recommended in the report)	LS	1	5,000	5,000
1.6	Slope Stabilizing Retaining Wall (bioswale channel)				-
1.6.1	Hand place rock terrace wall, Assume H = 0.5 m	m	180	50	9,000
1.6.2	Retaining wall, (calculation based on H = 1 m, L = 60 m)				
1.6.2.1	Excavation and Backfilling : Price to Include back-filling in (200 mm) thick layers, watering, compacting to 95% according to the modified field density test using suitable approved excavated materials as per specifications	m^3	120	10	1,200
1.6.2.2	Blinding: Plain cast in place concrete (grade 15), as per Specifications	m^3	10	150	1,500
1.6.2.3	Reinforced Concrete: Reinforced cast in place concrete grade 30 with all necessary fairface formwork and plastisizers as per Specifications	m^3	35	200	7,000
1.6.2.4	Steel Reinforcement Bars: Supply and install steel reinforcement bars for reinforced concrete work, yield stress 420 N/mm2 High tensile steel grade 60, or yield stress 280 N/mm2 Mild tensile steel grade 40. All as per specification, drawings, and approval of the Engineer.	Ton	3	1,400	4,200

2	West Culvert Outlet Endwall, Diversion Structure, Grit Chamber, and Trash Rack				
2.1	Excavation and Backfilling : Excavations from natural or reduced levels (which is lower) in any kind of soil, concrete or asphalt, trees or stonewalls ...etc. to the required depth and dimensions and as per specifications. Price to Include back-filling in (200 mm) thick layers, watering, compacting to 95% according to the modified field density test using suitable approved excavated materials as per specifications	m^3	90	10	900
2.2	Blinding: Plain cast in place concrete (grade 15), as per Specifications	m^3	3	150	450
2.3	Reinforced Concrete: Reinforced cast in place concrete grade 30 with all necessary fairface formwork and plasticizers as per Specifications	m^3	20	200	4,000
2.4	Steel Reinforcement Bars: Supply and install steel reinforcement bars for reinforced concrete work, yield stress 420 N/mm2 High tensile steel grade 60, or yield stress 280 N/mm2 Mild tensile steel grade 40. All as per specification, drawings, and approval of the Engineer.	Ton	3	1,400	4,200
2.5	Grouted Rip Rap	m^3	10	10	100
2.6	Sheet Waterproofing: Supply and apply 4mm thick torch applied bituminous water-proofing sheet, with Min. 10 cm overlap and a primer coat ,below ground level complete as per drawings, specifications and approval of the Engineer	m^2	75	25	1,875
2.7	Trash Bar Rack	m^2	13	250	3,250
2.8	Perforated Platform	m^2	9	30	270
2.9	Steel Ladder	No.	1	500	500
2.10	Paved path for dumpster from trash rack to road				
2.10.1	Path excavation	m^3	125	7	875
2.10.2	Path embankment	m^3	120	9	1,080
2.10.3	Concrete Ramp: Reinforced concrete Grade 25 the price include the Reinforcement.	m^3	40	320	12,800
2.10.4	Blinding: Plain cast in place concrete (grade 15), as per Specifications	m^3	10	150	1,500
2.10.5	150 mm thickness base course layer	m^3	33	25	825
2.10.6	Excavation for leveling	m^3	3	7	21
2.10.7	Fill for leveling	m^3	21	9	189

3	South Culvert Inlet Endwall with Trash Rack and Outlet Endwall				
3.1	Inlet Endwall and Trash Rack				
3.1.1	Excavation and Backfilling : Excavations from natural or reduced levels (which is lower) in any kind of soil, concrete or asphalt, trees or stonewalls ...etc. to the required depth and dimensions and as per specifications. Price to Include back-filling in (200 mm) thick layers, watering, compacting to 95% according to the modified field density test using suitable approved excavated materials as per specifications	m^3	130	10	1,300
3.1.2	Blinding: Plain cast in place concrete (grade 15), as per Specifications	m^3	2	150	300
3.1.3	Reinforced Concrete: Reinforced cast in place concrete grade 30 with all necessary fairface formwork and plasticizers as per Specifications	m^3	23	200	4,600
3.1.4	Steel Reinforcement Bars: Supply and install steel reinforcement bars for reinforced concrete work, yield stress 420 N/mm2 High tensile steel grade 60, or yield stress 280 N/mm2 Mild tensile steel grade 40. All as per specification, drawings, and approval of the Engineer.	Ton	3	1,400	4,200
3.1.5	Sheet Waterproofing: Supply and apply 4mm thick torch applied bituminous water-proofing sheet, with Min. 10 cm overlap and a primer coat ,below ground level complete as per drawings, specifications and approval of the Engineer	m^2	60	25	1,500
3.1.6	Trash Bar Rack	m^2	20	250	5,000
3.1.7	Perforated Platform	m^2	8	30	240
3.1.8	Concrete Pad	m^3	2	150	225
3.1.9	Paved path for dumpster from trash rack to road				-
3.1.9.1	Concrete Ramp: Reinforced concrete Grade 25 the price include the Reinforcement.	m^3	4	320	1,280
3.1.9.2	Blinding: Plain cast in place concrete (grade 15), as per Specifications	m^3	1	150	150
3.1.9.3	150 mm thickness base course layer	m^3	3	25	75
3.1.9.4	Fill for leveling	m^3	2	9	18
3.2	Replace concrete end wall structure on culvert outlet and restore stable side slope	LS	1	11,900	11,900

4	Convert wet retention lagoon to dry retention basin				
4.1	Empty water from lagoon to the nearest sewer manhole to facilitate sediment drying and removal	m^3	20,000	2	3,000
4.2	Remove dried sediments from lagoon bottom and haul to landfill for disposal	m^3	4,500	25	112,500
4.3	Backfill lagoon with locally-available, clean, recycled material consisting of concrete rubble, ceramics, block, rock, stone, gravel and coarse sand (no fines or clay) to Elev. 665.5 m asl.	m^3	45,000	4	180,000
				Total (USD)	**394,723**

Table C.2 - Infrastructure Improvements Upstream and Downstream of Lagoon

Item	Description	Units	Qty	Rate (USD)	Total (USD)
5	**Infrastructure Improvements Upstream and Downstream of Lagoon**				
5.1	Rehabilitate Sanitary Sewer Network in Hittin Camp				
5.1.1	Clean and video sanitary sewer drainage pipe network of various diameters	m	15,000	45	625,000
5.1.2	Supply and install manhole covers designed to deter theft	No.	600	60	36,000
5.2	Contingency Emergency Overflow Plan	--	--	--	-
				Total (USD)	**661,000**

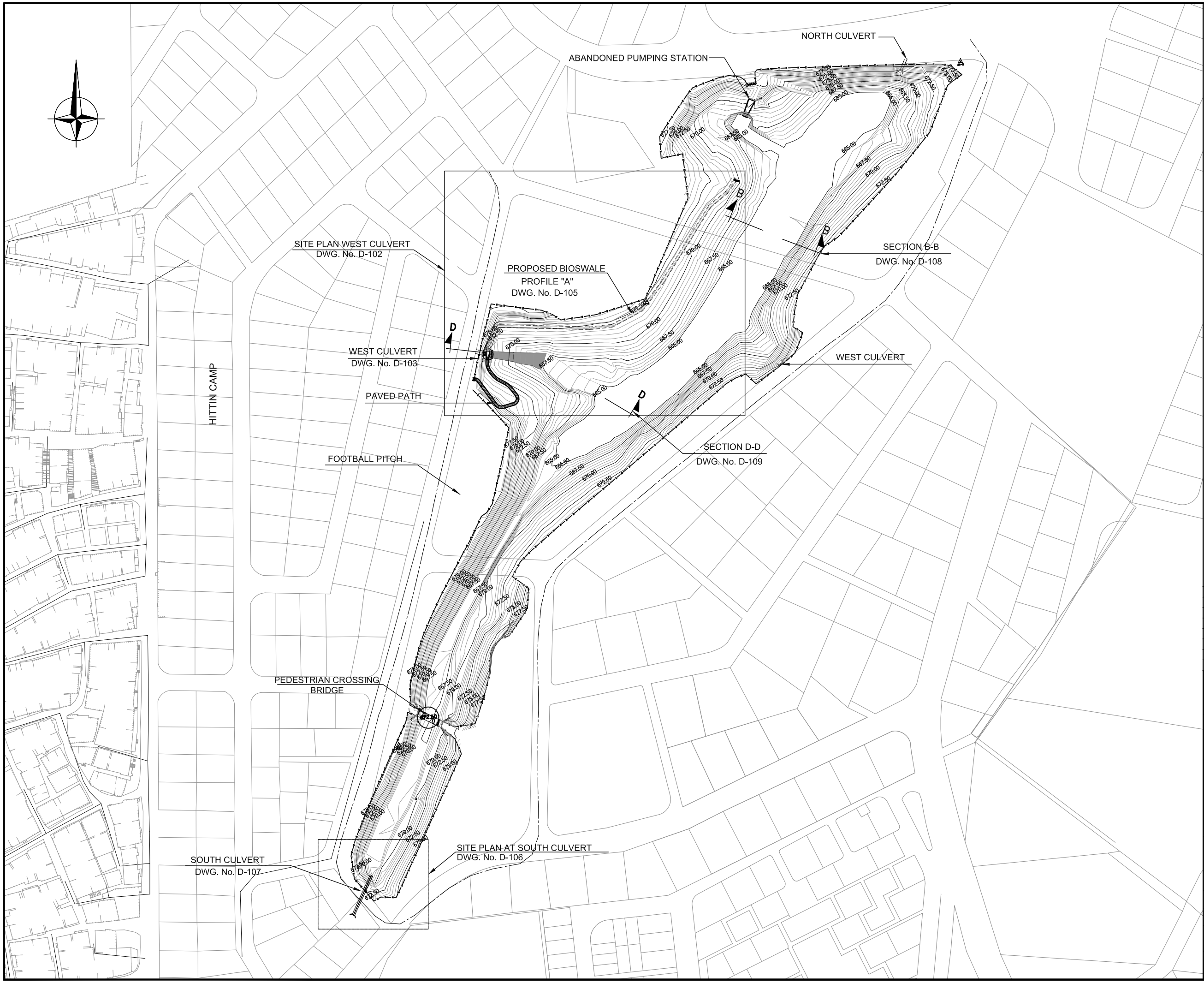

LEGEND:-

- EXISTING GROUND CONTOUR MAJOR
- EXISTING GROUND CONTOUR MINOR
- 1+400 ROAD CENTER LINE AND STATIONING
- PROPOSED BIOSWALE CHANNEL
- SECURITY WALL

NOTES:-

1. ALL ELEVATIONS AND STATIONING UNITS ARE METERS.

Purpose of Issue	Rev.	Date	By	Chk'd	App.

Consultant :

IMPLEMENTED BY AECOM AS PRIME AND ENGICON AS SUBCONTRACTOR

Client :

USAID - JORDAN

Project:

WATER REUSE & ENVIRONMENTAL CONSERVATION PROJECT
ODOR AND PEST CONTROL OPTIONS FOR RUSSEIFAH LAGOON (AREA 4)

Title:

SITE ORIENTATION PLAN

Design:	Drawn:	Checked:
Scale: 1:2500	Date: JUNE 2013	Approved:

0 — 125 METERS

Drawing Number: **D-101** Rev.:

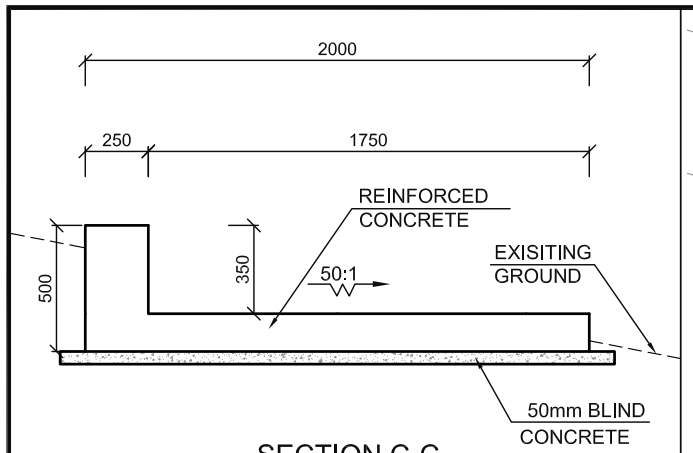

SECTION C-C
PATHWAY TYPICAL DETAIL
N.T.S.

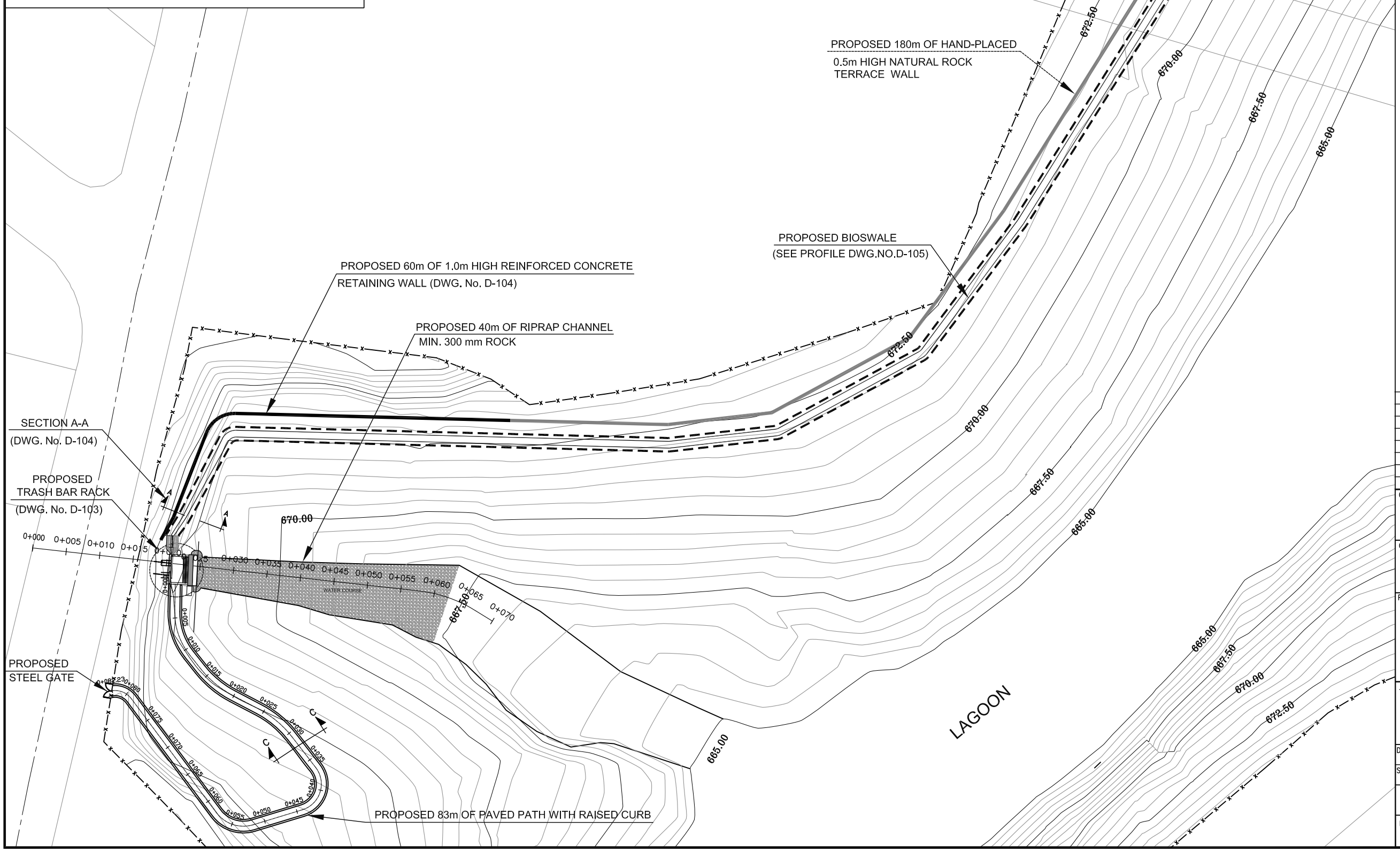

LEGEND:-

- EXISTING GROUND CONTOUR MAJOR
- EXISTING GROUND CONTOUR MINOR
- 1+400 ROAD CENTER LINE AND STATIONING
- PROPOSED BIOSWALE CHANNEL
- SECURITY WALL

NOTES:-

1. ALL ELEVATIONS AND STATIONING UNITS ARE METERS.

Purpose of Issue	Rev.	Date	By	Chk'd	App.

Consultant :
IMPLEMENTED BY AECOM AS PRIME AND ENGICON AS SUBCONTRACTOR

Client :
USAID - JORDAN

Project:
WATER REUSE & ENVIRONMENTAL CONSERVATION PROJECT
ODOR AND PEST CONTROL OPTIONS FOR RUSSEIFAH LAGOON (AREA 4)

Title:
SITE PLAN AT WEST CULVERT

Design:	Drawn:	Checked:
Scale: 1:600	Date: JUNE 2013	Approved:

0 15 30
METERS

Drawing Number: D-102
Rev.:

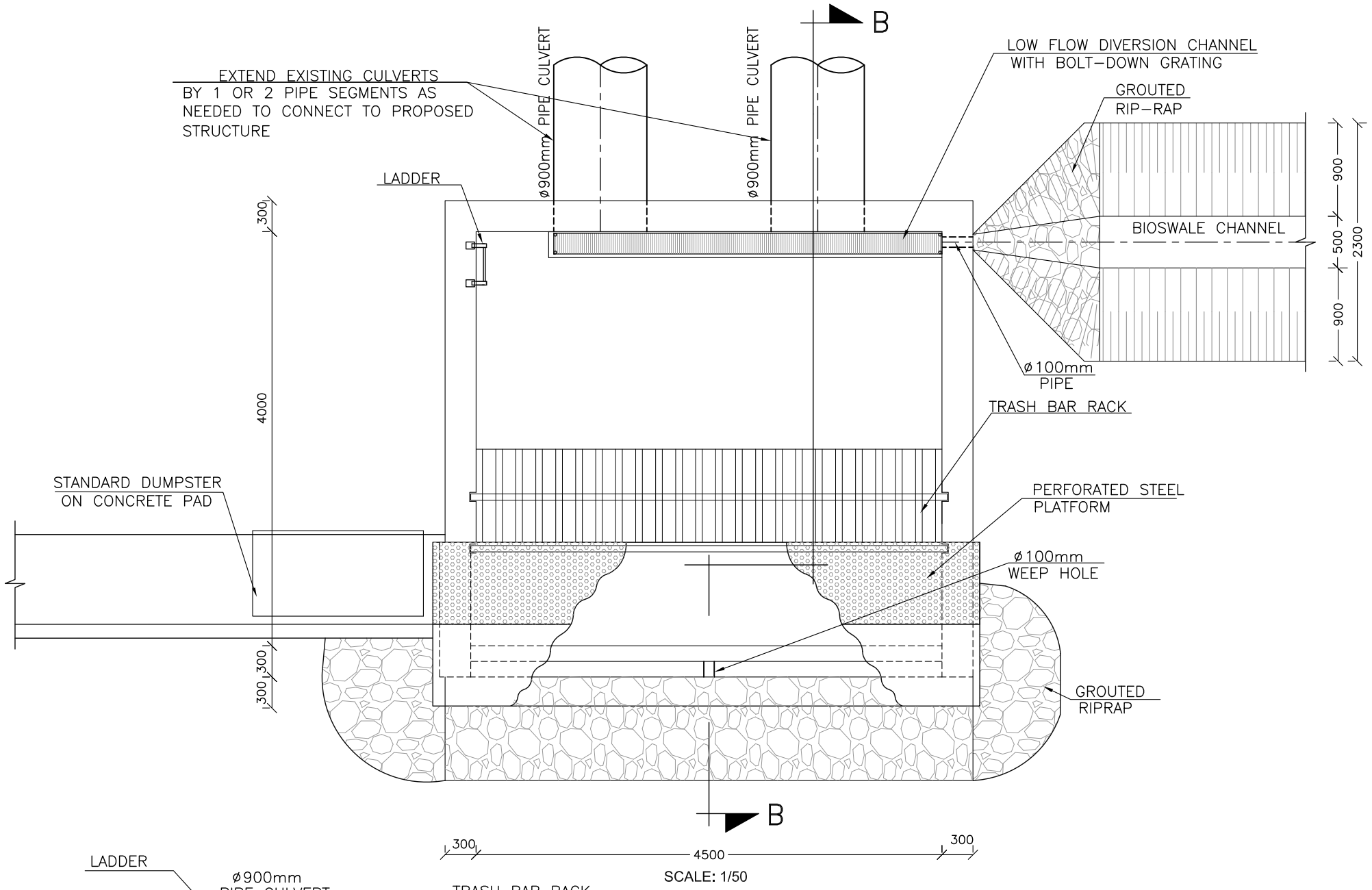

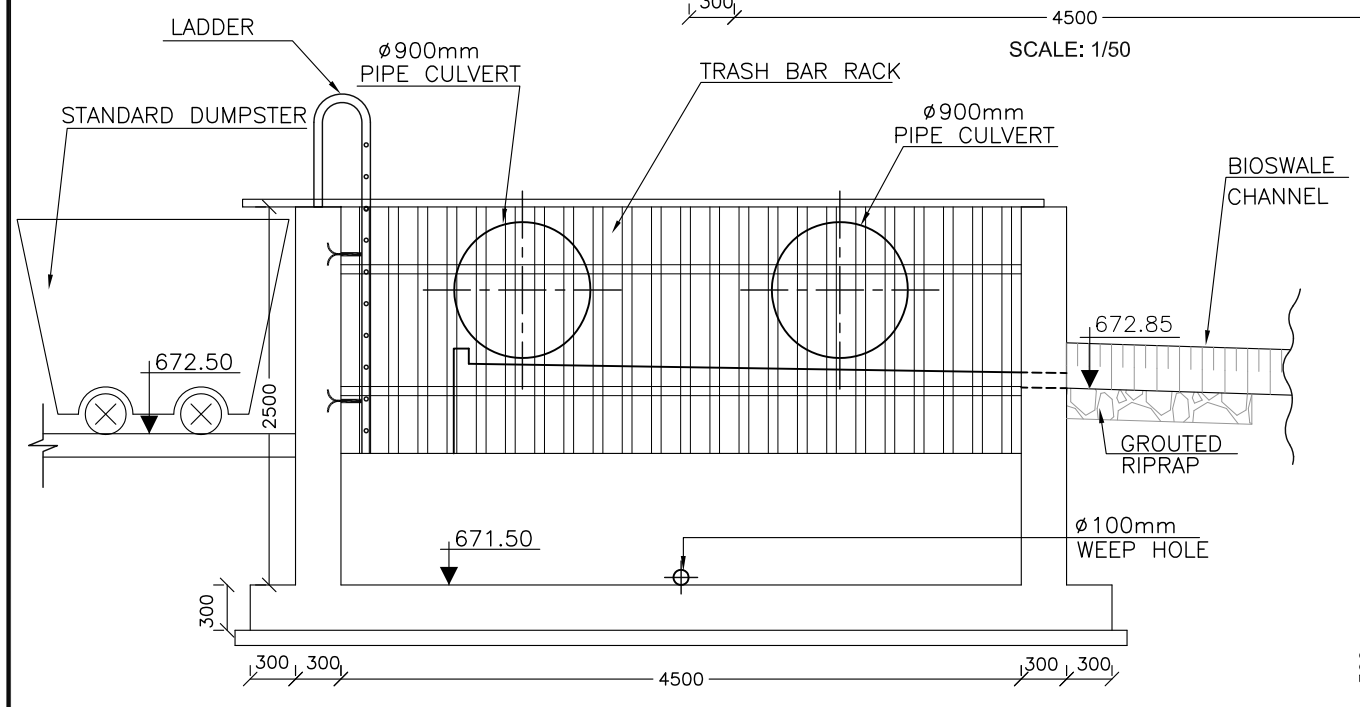

FRONT VIEW

SCALE: 1/50

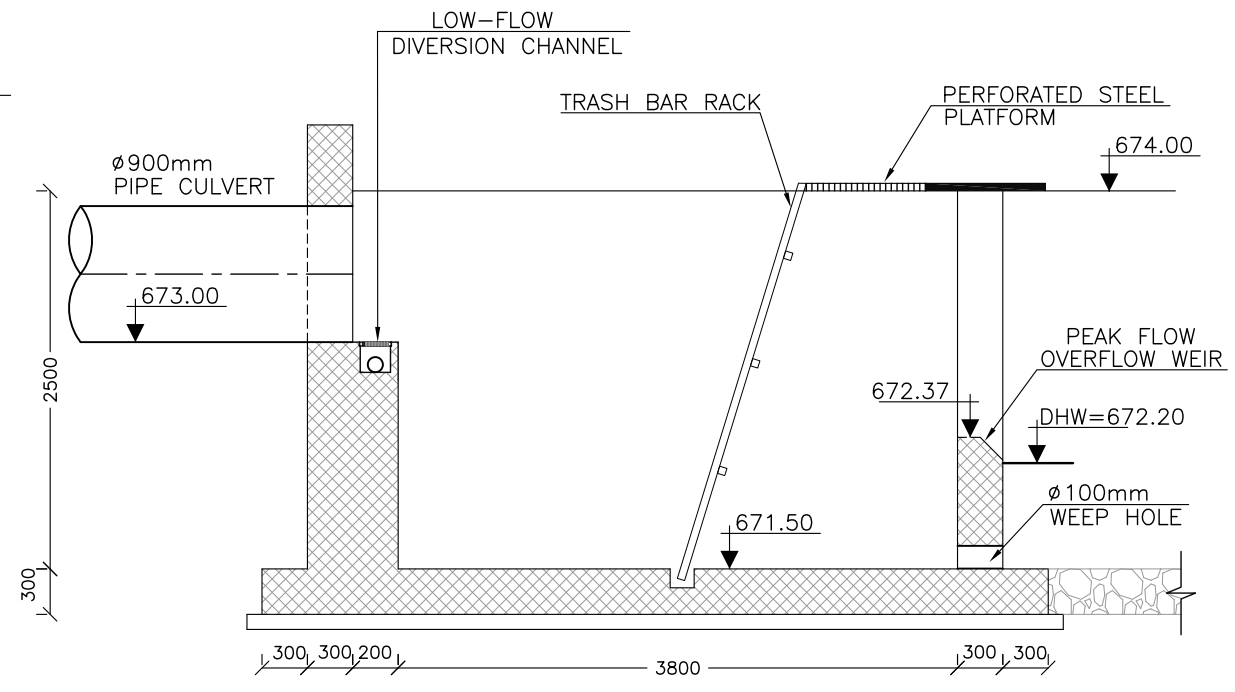

SECTION B-B

SCALE: 1/50

NOTES:-

1. ALL DIMENSIONS ARE IN MILLIMETERS AND LEVELS IN METERS UNLESS OTHERWISE INDICATED.
2. STRUCTURAL COMPONENTS ARE SHOWN AS CONCEPTS, NOT FOR CONSTRUCTION.

ABBREVIATIONS:-

DHW : DESIGN HIGH WATER

Purpose of Issue	Rev.	Date	By	Chk'd	App.

Consultant :

IMPLEMENTED BY AECOM AS PRIME AND ENGICON AS SUBCONTRACTOR

Client :

USAID - JORDAN

Project:

WATER REUSE & ENVIRONMENTAL CONSERVATION PROJECT
ODOR AND PEST CONTROL OPTIONS FOR RUSSEIFAH LAGOON (AREA 4)

Title:

PROPOSED TRASH BAR RACK FOR WEST CULVERT

Design:	Drawn:	Checked:
Scale: AS SHOWN	Date: JUNE 2013	Approved:

Drawing Number: D-103

Rev.:

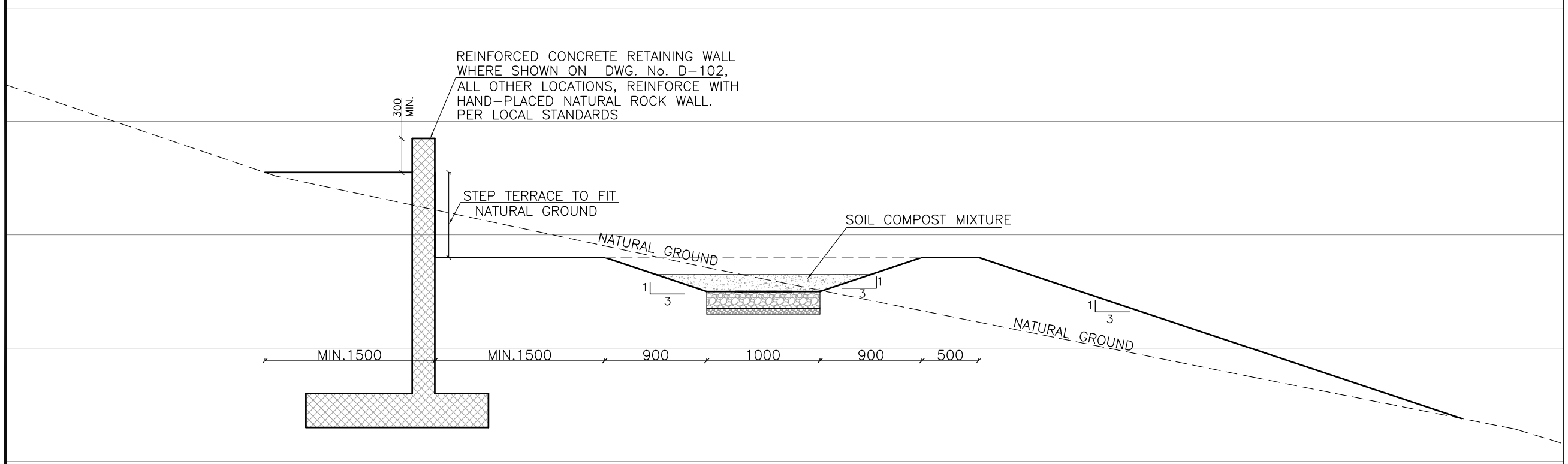

TYPICAL CROSS SECTION OF BIOSWALE CHANNEL

SCALE 1:400

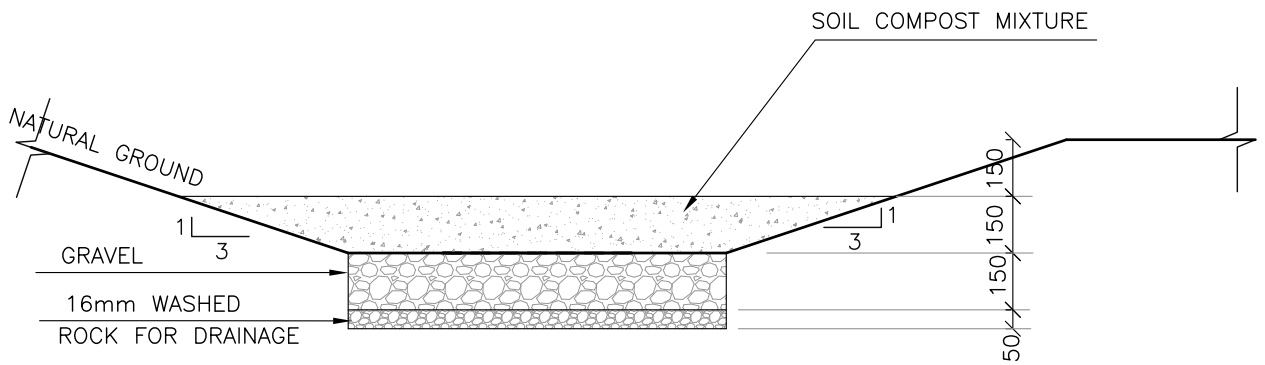

BIOSWALE CHANNEL CROSS-SECTION DETAIL

SCALE 1:200

NOTES:-

1. ALL DIMENSIONS ARE IN MILLIMETERS UNLESS OTHERWISE INDICATED.
2. FOR BIOSWALE CHANNEL PLAN REFER TO DWG. No. D-102.
3. FOR CHANNEL VEGETATION TYPES REFER TO THE REPORT "ODOR AND PEST CONTROL OPTIONS FOR RUSSEIFAH LAGOON (AREA 4)".

Purpose of Issue	Rev.	Date	By	Chk'd	App.

Consultant :

IMPLEMENTED BY AECOM AS PRIME AND ENGICON AS SUBCONTRACTOR

Client :

USAID - JORDAN

Project:

WATER REUSE & ENVIRONMENTAL CONSERVATION PROJECT

ODOR AND PEST CONTROL OPTIONS FOR RUSSEIFAH LAGOON (AREA 4)

Title:

SECTION A-A:
TYPICAL CROSS SECTION
OF BIOSWALE CHANNEL

Design:	Drawn:	Checked:
Scale: AS SHOWN	Date: JUNE 2013	Approved:

Drawing Number: **D-104** Rev.:

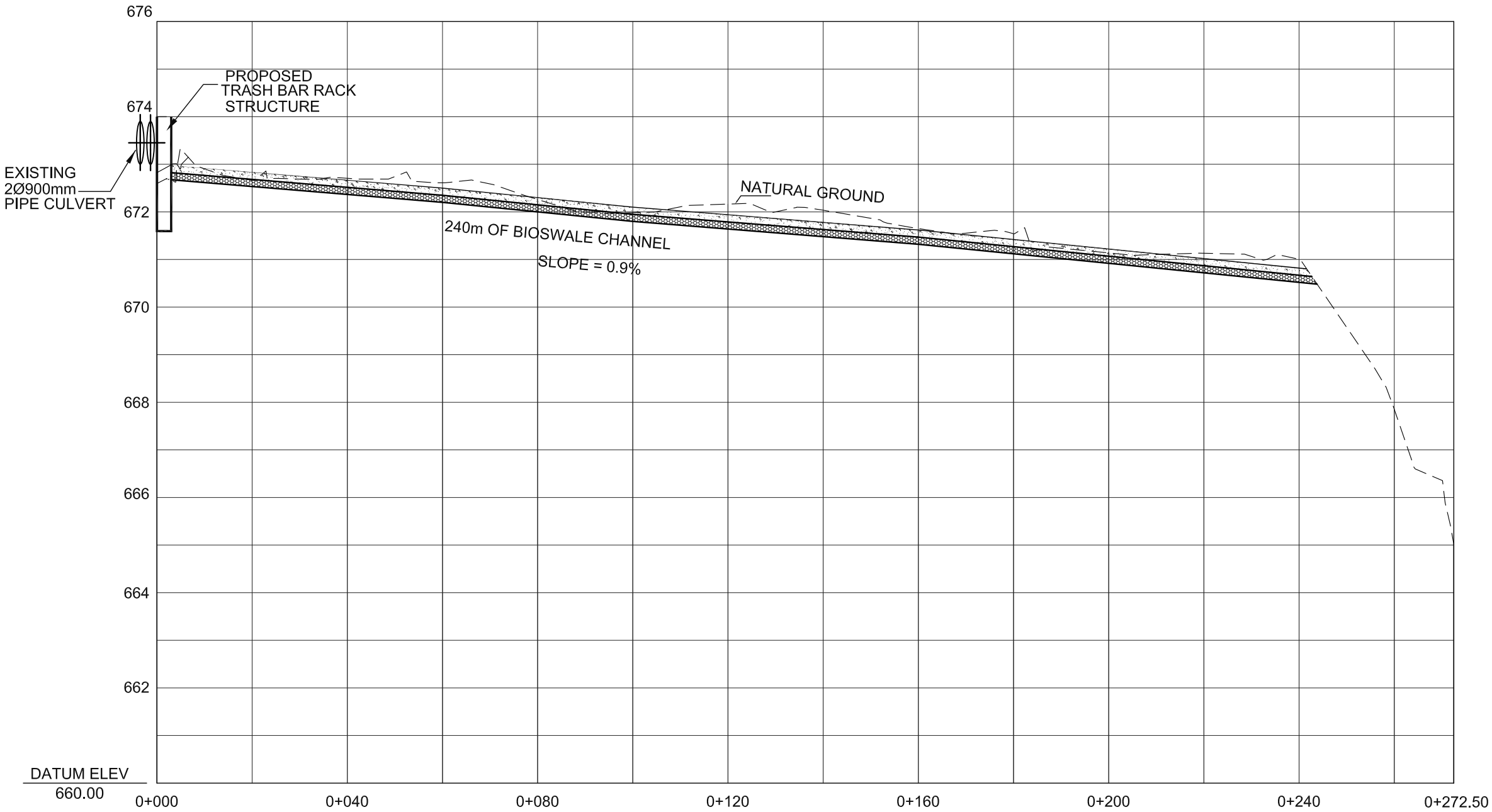

LEGEND:-

— — — — NATURAL GROUND

═══ PROPOSED BIOSWALE CHANNEL

NOTES:-

1. FOR BIOSWALE CHANNEL PLAN REFER TO DWG. No. D-102.
2. ALL STATIONING AND ELEVATION UNITS ARE METERS.

Purpose of Issue	Rev.	Date	By	Chk'd	App.

Consultant :

IMPLEMENTED BY AECOM AS PRIME AND ENGICON AS SUBCONTRACTOR

Client :

USAID - JORDAN

Project:

WATER REUSE & ENVIRONMENTAL CONSERVATION PROJECT

ODOR AND PEST CONTROL OPTIONS FOR RUSSEIFAH LAGOON (AREA 4)

Title:

PROFILE A:
BIOSWALE CHANNEL

Design:	Drawn:	Checked:
Scale: HOR. 1:100 VER. 1:1000	Date: JUNE 2013	Approved:

0 25 50
METERS

Drawing Number: **D-105**

Rev.:

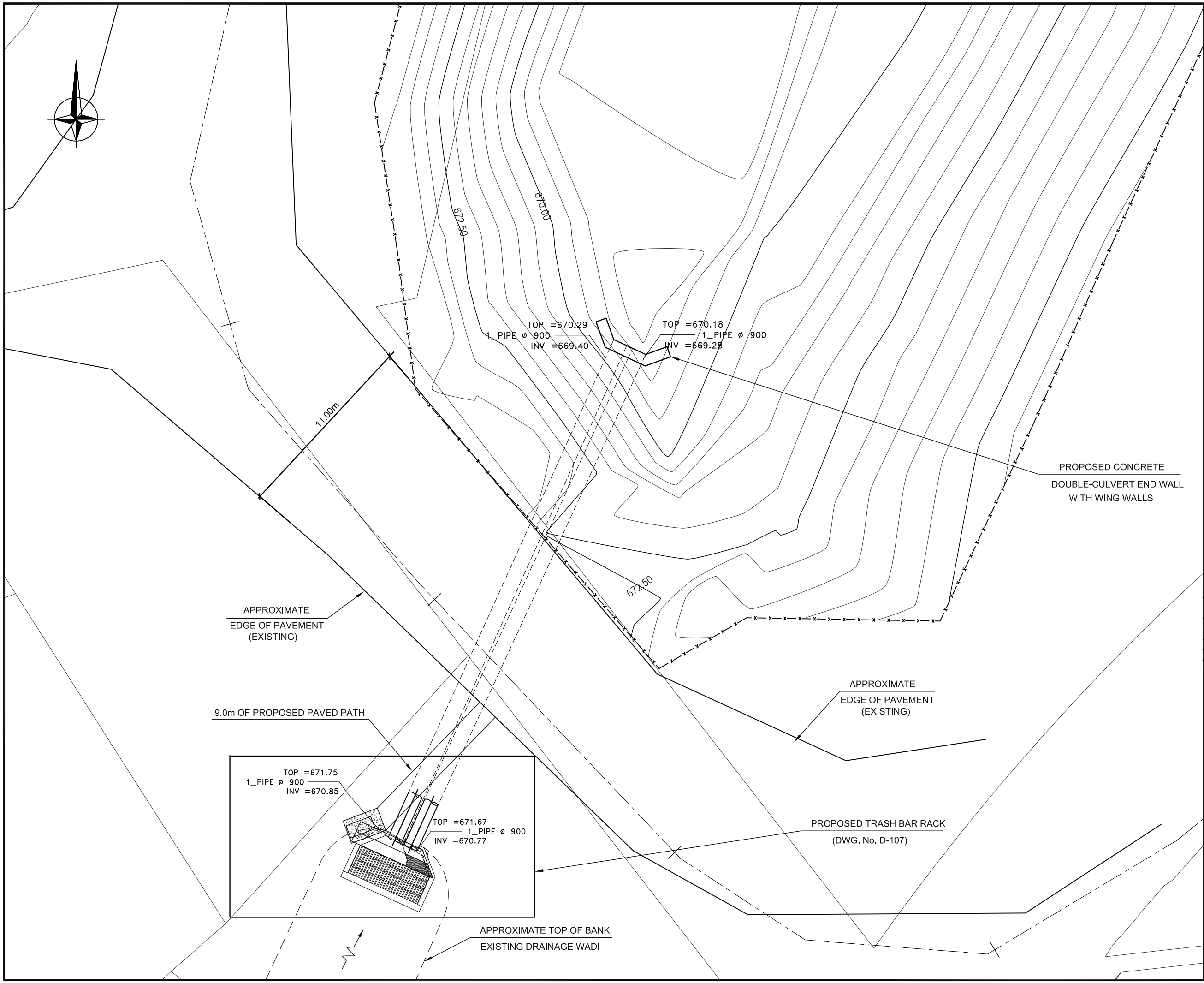

LEGEND:-

- EXISTING GROUND CONTOUR MAJOR
- EXISTING GROUND CONTOUR MINOR
- 1+400 ROAD CENTER LINE AND STATIONING
- PROPOSED BIOSWALE CHANNEL
- SECURITY WALL

NOTES:-

1. FOR TRASH BAR RACK DETAILS REFER TO DWG. D-107.
2. ALL ELEVATIONS UNITS ARE METERS.
3. PIPE DIAMETERS UNITS ARE MILLIMETERS.

Purpose of Issue	Rev.	Date	By	Chk'd	App.

Consultant :

IMPLEMENTED BY AECOM AS PRIME AND ENGICON AS SUBCONTRACTOR

Client :

USAID - JORDAN

Project:

WATER REUSE & ENVIRONMENTAL CONSERVATION PROJECT
ODOR AND PEST CONTROL OPTIONS FOR RUSSEIFAH LAGOON (AREA 4)

Title:

SITE PLAN AT SOUTH CULVERT

Design:	Drawn:	Checked:
Scale: 1:200	Date: JUNE 2013	Approved:

0 5 10
METERS

Drawing Number: **D-106**

Rev.:

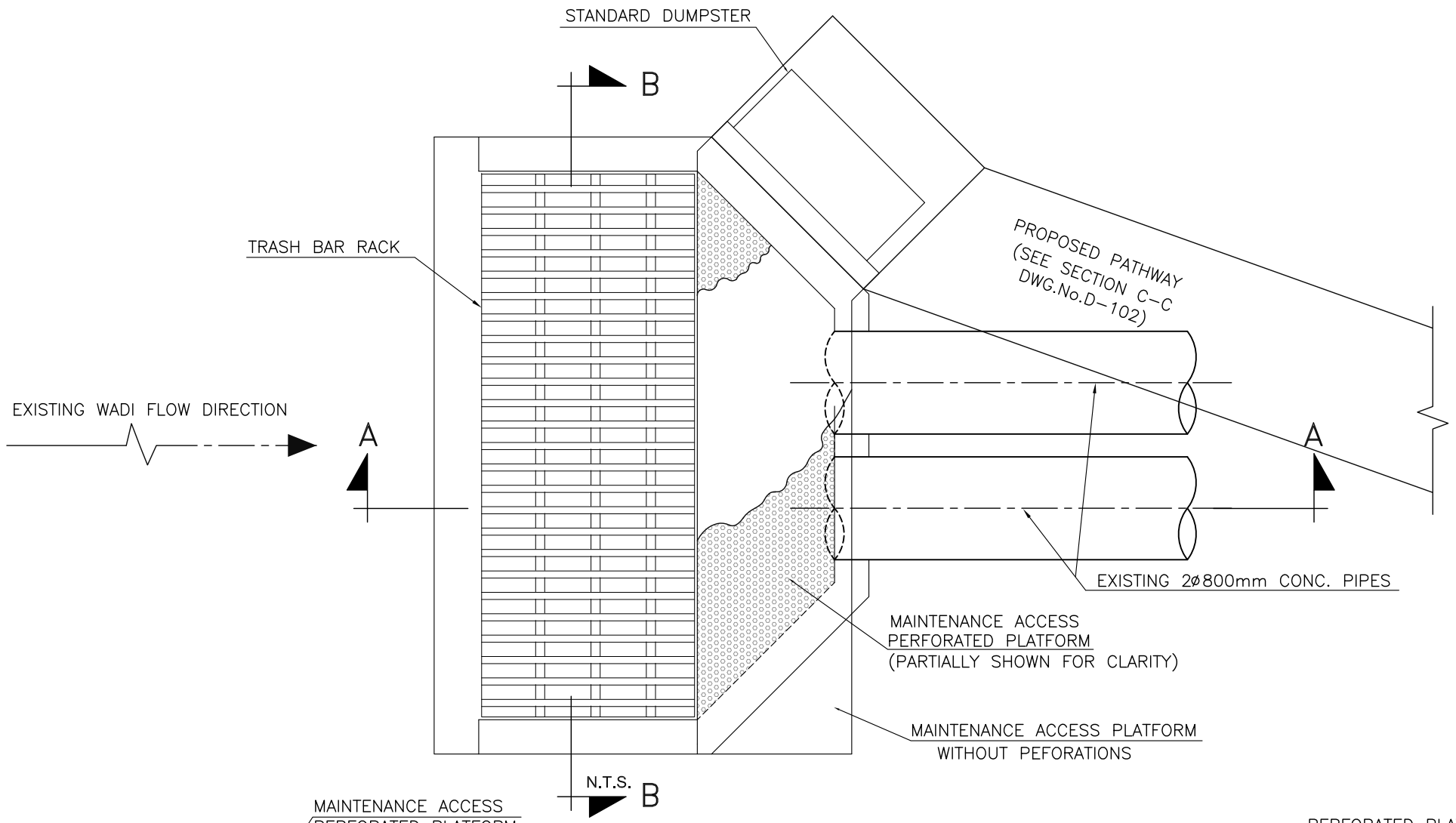

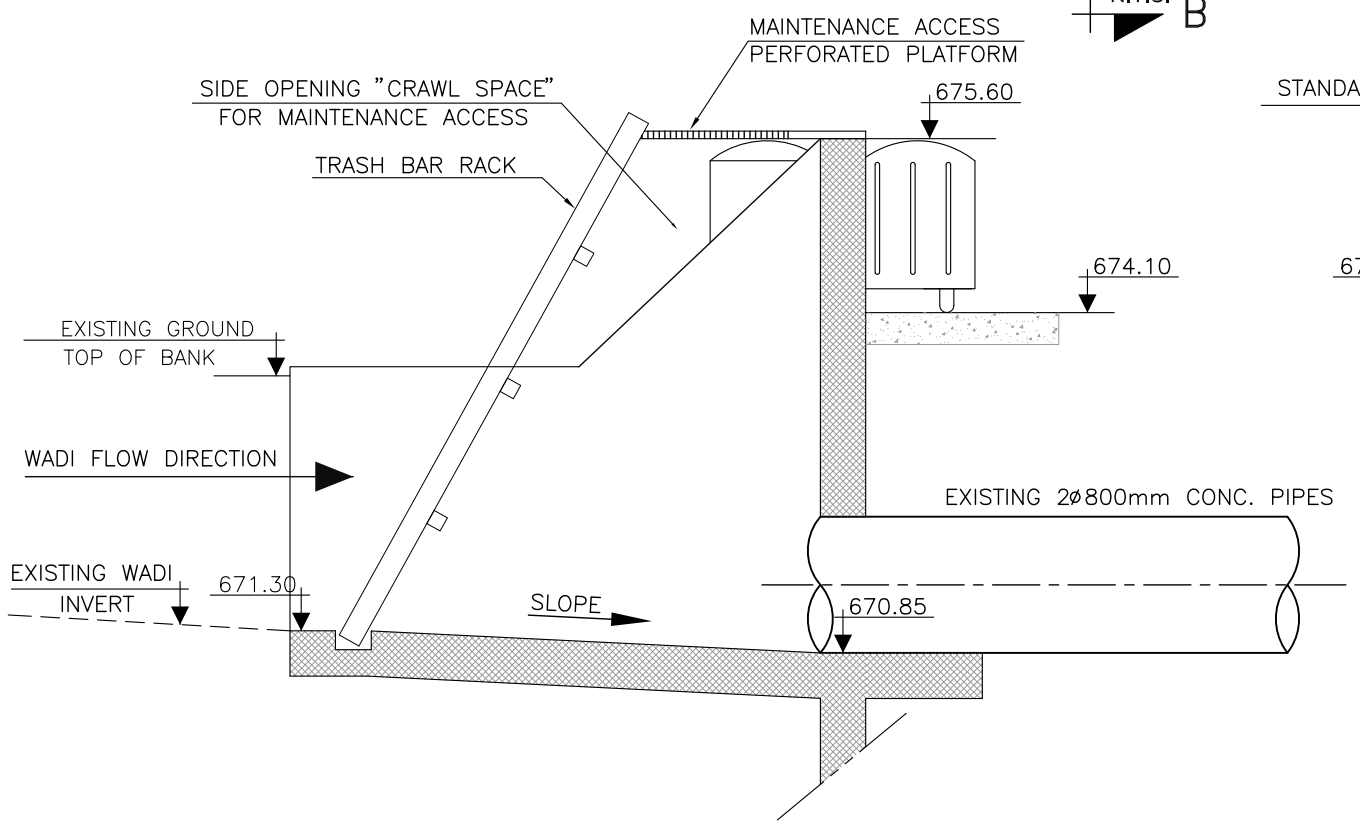

SECTION A-A

N.T.S.

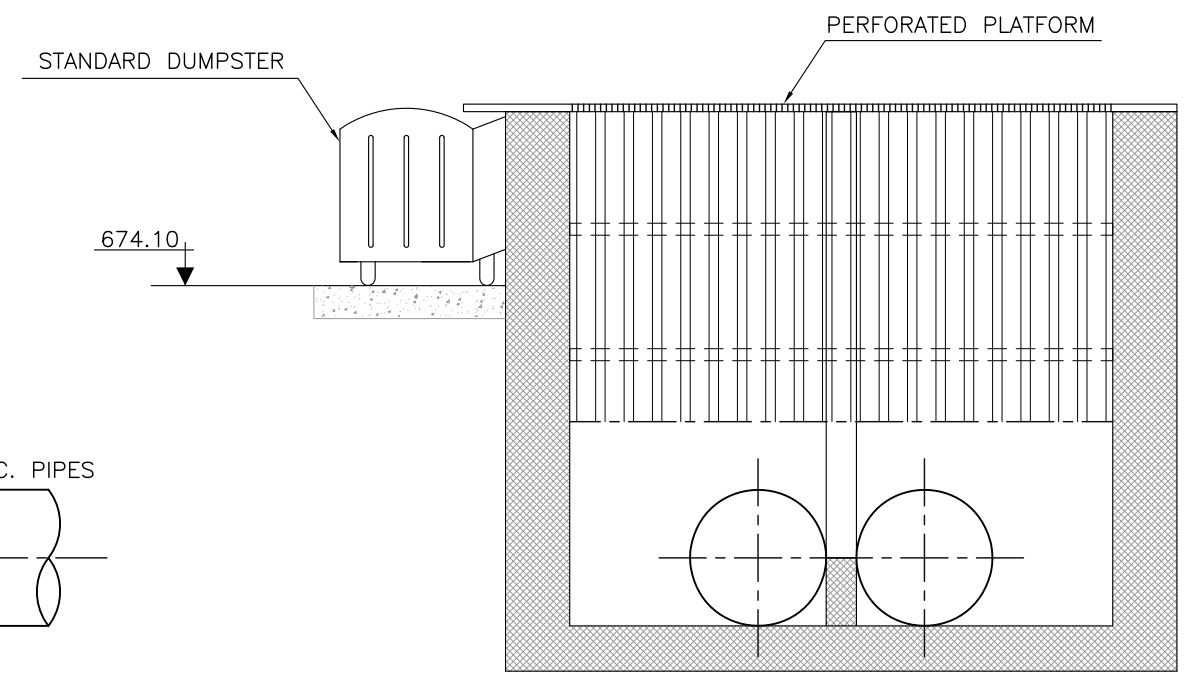

SECTION B-B

N.T.S.

NOTES:-

1. ALL LEVELS ARE IN METERS UNLESS OTHERWISE INDICATED.
2. STRUCTURAL COMPONENTS ARE SHOWN AS CONCEPTS, NOT FOR CONSTRUCTION.

Purpose of Issue	Rev.	Date	By	Chk'd	App.

Consultant :

IMPLEMENTED BY AECOM AS PRIME AND ENGICON AS SUBCONTRACTOR

Client :

USAID - JORDAN

Project:

WATER REUSE & ENVIRONMENTAL CONSERVATION PROJECT
ODOR AND PEST CONTROL OPTIONS FOR RUSSEIFAH LAGOON (AREA 4)

Title:

PROPOSED TRASH BAR RACK FOR SOUTH CULVERTS

Design:	Drawn:	Checked:
Scale: N.T.S.	Date: JUNE 2013	Approved:

Drawing Number: D-107

Rev.:

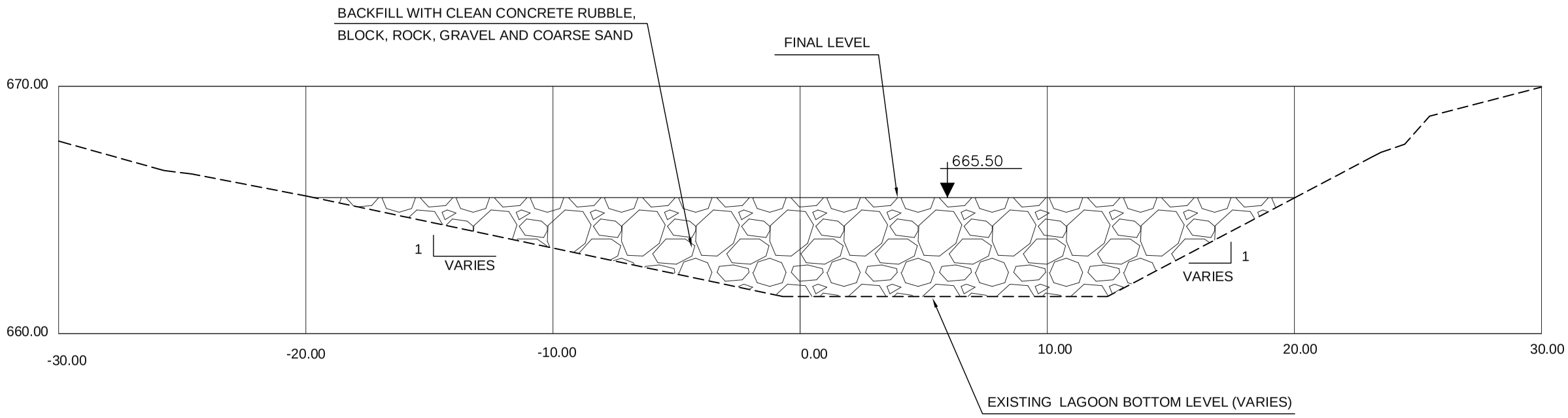

SECTION B-B

LEGEND:-

BACKFILLING FINAL LEVEL

EXISTING GROUND

NOTES:-

1. ALL LEVELS AND STATIONING ARE IN METERS UNLESS OTHERWISE INDICATED.
2. FOR SECTION "B-B" PLAN REFER TO DWG. D-101.

Purpose of Issue	Rev.	Date	By	Chk'd	App.

Consultant :

IMPLEMENTED BY AECOM AS PRIME AND ENGICON AS SUBCONTRACTOR

Client :

USAID - JORDAN

Project:

WATER REUSE & ENVIRONMENTAL CONSERVATION PROJECT
ODOR AND PEST CONTROL OPTIONS FOR RUSSEIFAH LAGOON (AREA 4)

Title:

SECTION B-B:
DRY RETENTION LAGOON

Design:	Drawn:	Checked:
Scale: 1:200	Date: JUNE 2013	Approved:

0 5 10
METERS

Drawing Number: D-108

Rev.:

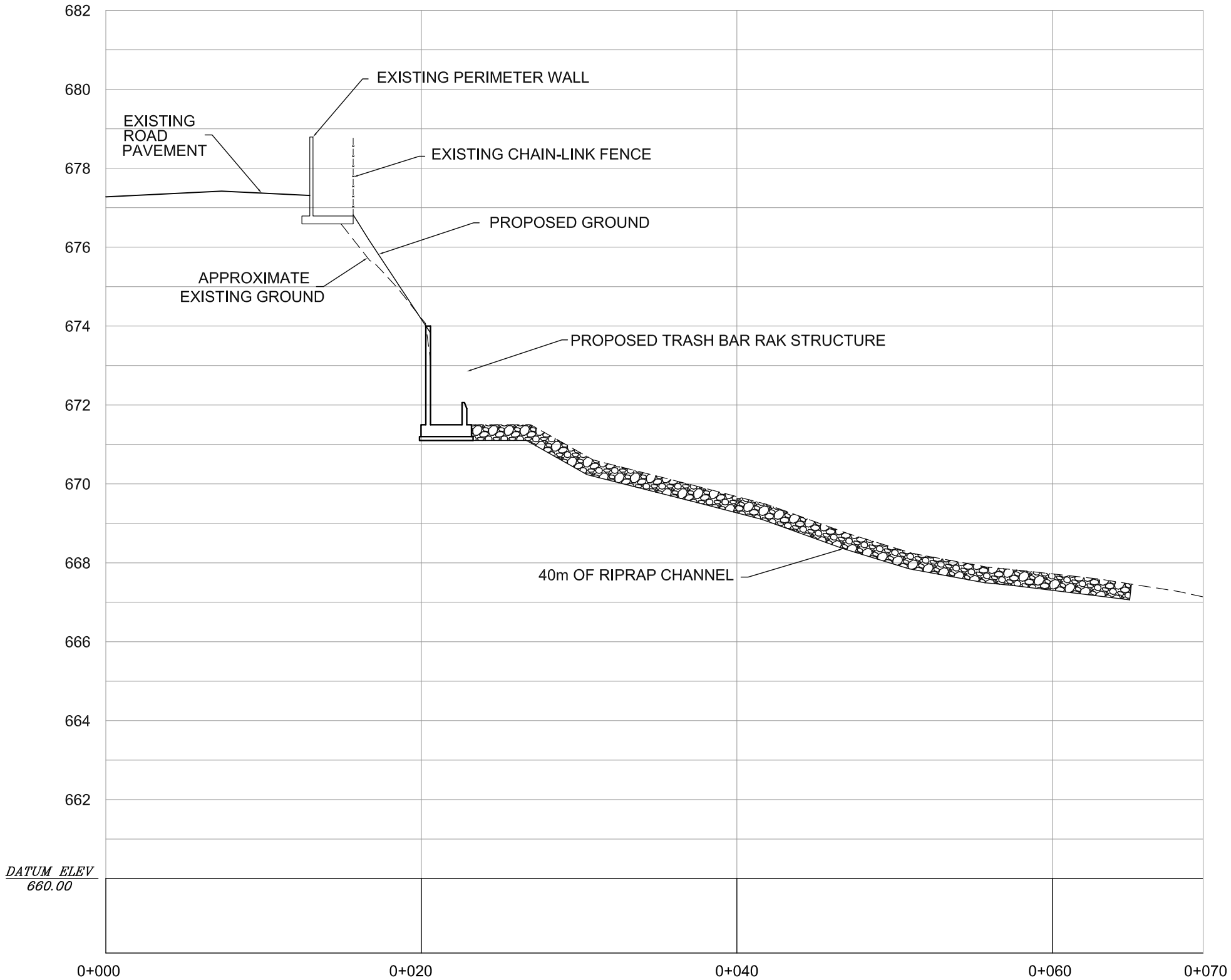

LEGEND:-

PROPOSED GRADED SURFACE

EXISTING GROUND SURFACE

FENCE

Purpose of Issue	Rev.	Date	By	Chk'd	App.

Consultant :

IMPLEMENTED BY AECOM AS PRIME AND ENGICON AS SUBCONTRACTOR

Client :

USAID - JORDAN

Project:

WATER REUSE & ENVIRONMENTAL CONSERVATION PROJECT
ODOR AND PEST CONTROL OPTIONS FOR RUSSEIFAH LAGOON (AREA 4)

Title:

SECTION D

Design:	Drawn:	Checked:
Scale: HOR. 1:300 VER. 1:125	Date: JUNE 2013	Approved:

0 15
METERS

Drawing Number: D-109

Rev.: