USAID | COLOMBIA
FROM THE AMERICAN PEOPLE

BIOREDD+ PROGRAM

REDUCTION AND MONITORING OF MERCURY USE IN BAJO CAUCA

BIODIVERSITY – REDUCED EMISSIONS FROM DEFORESTATION AND FOREST DEGRADATION (BIOREDD+)

August 2013

This publication was produced for review by the United States Agency for International Development. It was prepared by Chemonics International Inc.

INDEX

I. Introduction 1
1.1 Deliverables and Accomplishments 1
II. Mini dragas 2
2.1 Dredge intervention 17
2.1.1 Dredge mercury reduction 17
2.1.2 Gambling incentives 18
2.2 Improving gold concentration 18
2.2.1 Cobble screen (cowcatcher, or 'mini-grizzly') 18
2.2.2 Flat bed and incline control 19
2.2.3 Progressive size capture 19
2.2.4 Flow to width proportionality optimization 20
2.2.5 Sluice stacking 21
2.3 Dredge Monitoring 23
2.4 Aquatic mercury monitoring 24
2.4.1 Legacy mercury burden in sediment 24
2.4.2 Mercury transformations and mobility 25
2.4.3 Mercury in aquatic fauna 25
2.5 Dredge Challenges 25
III. Excavator mining 27
3.1 Excavator impact mitigation 33
3.2 Dredge mercury monitoring 37
3.3 Excavator mining intervention challenges 37
IV. Bajo Cauca gold shops 39
4.1 Caucasia gold shops 39
4.2 Gold shop visits 41
4.2.1 Compra Dagani 41
4.2.2 Compra de Dona Pilar 41
4.2.3 Compra El Castilo 42
4.2.4 Compra Aguaca 42
4.2.5 Compra 42
4.3 Gold shop mercury mitigation 42
4.4 Gold shop mercury monitoring 43
V. Land reclamation resources 45
5.1 Minas Rio Rayo 45
5.2 Jardin Botanico El Bagre 47
5.3 Piscicultura Don Alvaro 48
VI. Academic resources 50
VII. Web based centre for miner training 50
VIII. Follow up 51

I. INTRODUCTION

This report details my findings from investigations of mining practices and mercury use in the Bajo Cauca region of Antioquia department, Colombia. Each section of this report deals with a separate aspect of this project: mini-dragas, excavators, and gold shops. I provide recommendations for interventions in Segovia based on my PhD work in a separate document.

Each section provides context on the processes and tools presently used by miners, which is important for developing interventions. I follow this with my recommendations for interventions, suggestions for measuring the impact of these efforts, and challenges that may present themselves. At the end, despite the fact that it is neither my expertise nor my mandate, I share a few ideas that I have about landscape restoration and alternative income generation.

It is important to note the wider implications of this project, and why I believe it is important to work hard to improve gold recovery in the alluvial context as well as reducing mercury use. The DOS had projects in the Philippines, Indonesia, Bolivia, and various countries in West Africa, and CIDA is beginning a project in Peru. All of these areas and projects include or are focused on alluvial mining, and yet there has been very little research on methods of improving alluvial extraction methods and monitoring project success. This project is also larger than any of the others mentioned, with the possible exception of the upcoming initiative in Peru. To produce, test, evaluate, and document a set of new techniques for improving gold recovery and replacing or eliminating mercury use would be to aid countless projects and people around the world. There has never been a better team to take on such a challenge, and never has a team had so many resources at their disposal. I hope that this project makes every effort to innovate new solutions and carefully document the successes and failures encountered, as well as to create a comprehensive set of educational materials, that can all be used to promote success in improving alluvial practices across the globe.

1.1 Deliverables and Accomplishments

This is a summary of the deliverables set out in the scope of work and products or outcomes that fulfill those deliverables.

1. Written contributions to intervention strategy and work plan development
60+ page report detailing local mining practices, potential intervention strategies for dredge mining, excavator mining, and gold shops.
30+ page report detailing Segovia mining and refining processes, previous interventions, potential further interventions, and airborne mercury monitoring.

Obtained various other reports and written materials on equipment specifications, application, and testing.

2. Written protocols for mercury measurement, monitoring, and analysis (including indicators)
The aforementioned reports include all of this information.

3. Meetings held with people of BIOREDD project, GOC, and stakeholders.
Held several meetings in Caucasia which included BIOREDD project staff (including Bogota BIOREDD staff), partners, local government, and mining associations
Attended UNEP mining policy workshop in El Bagre, in which I had meetings with various miners, mining association leaders, local government leaders, and BIOREDD project staff.

Attended meetings in Medellin at Antioquia regional government offices and the National University campus in Medellin.

4. Identified BIOREDD staff trained in mercury monitoring.
Trained BIOREDD staff in airborne mercury monitoring, coordinated with CorAntioquia to allow BIOREDD access to the Lumex mercury analyzer that the project staff was trained to use, set up Lumex mercury sample py rolyzer training sessions at the University of Cartagena for BIOREDD staff and Choco UNIDO staff.

5. Specifications for equipment purchase
Identified Medellin suppliers for centrifuges and other mining equipment, and a manufacturer in Medellin that can build entire processing plants from scratch, except centrifuges.

II. MINI DRAGAS

Mini dragas, or mini dredges, are the main means of gold production in the Cauca and Nechi rivers in Antioquia. They are said to cost 6-9 million pesos Colombianos (2500-4500 USD) each, and are basically wooden rafts floating on old plastic drums. Dredges have one or two pumps that suck river sediment up onto an inclined sluice that is lined with carpets. To slow down the sediment and water flowing over the carpets, miners nail down metal grates on top of the carpets. One or two dredge pumps suck river sediment up onto the sluice through a metal pipe, and the sluice discharges directly into the river. Dredging is very inefficient, and therefore profitability relies on high throughput. The pumps are powerful enough to suck large stones (20 cm long or more) onto the sluice bed. The sediment flows rapidly down the sluice, likely carrying most of the gold with it. Miners know this, and they often re-work the same locations over and over.

Exploration is done by taking a shovel full of river-bed sediment and panning it in the shovel itself. In about one minute, our river miner guide shovel-panned out visible specks of gold next to a place that a dredge was currently working. Miners also decide whether or not to move their dredge the next day based on the current day's earnings. Dredges are moved upstream by lifting them onto the long wooden motorized boats that are the main mode of transportation on these rivers, and downstream by going with the flow.

The Cauca river, on which we inspected some dredges, is a shallow, fast moving river in which the bedload transport is likely quite rapid. This means that previously mined sites may be re-loaded with gold or turned over relatively quickly. Miners say that when the water is higher, they produce more gold; possibly as much as double the gold produced in low water. This depends on seasonal rains in the headwaters, and so gold production is said to exhibit a peak twice a year in normal years. However, miners report that there has not been a high water event in one year, and that production has therefore been flat over that time.

Dragueros with two dredge pumps sluice double the amount of material, but instead of working all day to produce double the gold, the double-draga we saw quit at mid-day even though the two operators had only earned at most 35,000 pesos each (after subtracting fuel costs and paying half their net income to the draga owner). They used more than 60 litres of fuel to extract a tiny (<1cm diameter) amalgam that is worth ~200,000 pesos. Our tour guide on this excursion is a dredge owner, but his operates in the Nechi area, as he says there is much more gold there. Dredge miners liken their work to gambling. They can endure many days with low or no profits because of the memory, and promise, of high payoffs that are possible. One of the presidents of the dredge miners' association put it this way: "miners often start young, as they follow their father or their

neighbours to the river. They often have many days in the beginning when they make little or no money, and they may wonder if it is really a life that they want for themselves. But on that inevitable day when they make a million pesos, or maybe more, they are changed forever. They will never drive a taxi or work in the fields, because those jobs will never hold such promise; even if it means starving for months, in their mind they will always be just one day away from earning a small fortune."

Mercury is only added after the dredging stops, so no mercury is lost by attrition as in other cases where it is added to sluice riffles or to the grinding mills in the case of hard rock mining. We were told that the alluvial miners in the Caucasia area exclusively use mercury that was recovered in gold shops, where they supposedly buy the mercury. They say that this mercury works better than fresh mercury that had never been evaporated.

Draga at work. The operator swings the dredge back and forth along the riverbed to dredge new material, periodically changing the metal rod anchor positions. Note the double dredge pumps.

Dredge conduit on dry land.

The sluice bed is a metal grating nailed down over carpets which apparently cost 50,000 pesos per metre (?!).

Panning a single shovel full of sediment as an artisanal ‘assay’ of the kind dragueros use to choose a dredging site.

Carpets, or in this case burlap sacks, are laid down with grates on top.

A ~60 year old man nails down grates in preparation for dredging.

More material dredged = more gold? Perhaps, however I suspect that gold capture efficiency could be improved by having slower flow. Turbulence due to high flows might be keeping most of the gold in suspension. How to optimize this?

Having dredged enough material for the day, the grates are pulled up, the carpets put aside, and the sluice bed is washed with a rolled up sack and grate to stop the concentrate from flowing off the end of the sluice box.

Another burlap sack is nailed to the bed, rolled up like the previous one (bottom left) which caught the loose carpet/sluice bed sediment (not shown, they already shoveled it into a pile behind the burlap nailing miner.)

A shovelful of concentrate is panned to assess how much mercury they should add.

Before washing out the carpets, one 2/3 capful of mercury is added to the loose sediment that was washed off the sluice bed or fell off the carpets. This is the only mercury added during the entire process.

Washing the carpets with one dredge pump discharging water onto the sluice bed, and smearing the concentrate around to drive off the fine, light material and mix in the mercury.

Scooping out the material that overflowed while washing the carpets and driving off the fines.

Mercury trapped against the burlap (shark fin shaped silver bit, and scattered droplets).

Mercury is scooped up with a spoon and held in a plastic container for panning later on.

Washing the concentrate into a Batea, or gold pan.

Panning the mercury containing concentrate. (<5 minutes).

Pouring out the mercury, laden with gold dust.

The mercury is put in a cloth for squeezing.

Squeezing the amalgam to recover the excess mercury.

<60 L of gasoline, >4 hours working next to deafening dredge pump noise, and plenty of hard work later, they recovered this much amalgam, 50% of which is mercury. They just earned about 20 dollars after paying the dredge owner and operating costs.

Replacing the burlap and carpets before selling their amalgam and going home for the day. Not much to show for all that.

Our guide took one shovelful of concentrate tailings that flowed into the river when the last burlap barrier was removed and washed. A minute of panning produced this amalgam. There were at least 10 dragas in the 2-3 kilometers of river that we explored on this day, of which only 4 were operating (perhaps because the rest are waiting for high-water?). Each would likely lose this much mercury to the environment every day, and more if gold concentrations were higher.

2.1 Dredge intervention

Improving gold recovery is integral to reducing mercury consumption and waste. Not only is it the key to convincing miners that moving away from mercury will not incur profit losses, but also helps to build trusting relationships with miners. This will enable access to mercury monitoring information and help mercury reduction initiatives propagate beyond the project end date and throughout the region.

Dragueros already use quite small quantities of mercury, however the cumulative effect over time of hundreds of them has yielded considerable and widespread contamination. So much contamination, in fact, that they told us it was likely impossible to provide us with mercury free concentrate, even if they did not add any additional mercury. Fortunately, dredge miners understand that they need to match the amount of mercury applied to the amount of gold that occurs in the deposit they are working, which they assess with their rudimentary shovel panning assay. Unfortunately, since they are naturally abstemious with mercury and use small quantities in the first place, and especially since their means of determining gold concentrations are so rudimentary, it is unlikely that this project could prescribe and monitor an effective reduction in mercury use without pursuing entirely mercury free techniques

It is advantageous that mercury is only added after the dredging stops, as it would be much harder to convince miners to abandon mercury if they added it to the sluice carpets (as is the case with excavator mining). Therefore it will be much easier to convince miners to save all of their dredge concentrate and transport it to a processing plant.

2.1.1 Dredge mercury reduction

The first step is to take the presidents of the dredge associations and select high profile miners and government officials to existing processing facilities where they can test out their own concentrate with alternative technologies. Given that legacy mercury contamination pervades all river sediments, flotation is likely not an option. Centrifuge and shaker tables should work very well. These facilities can be tested either in UNIDO remediation sites in Segovia or at the Universidad Nacional in Medellin. Their facilities include all of the alternative technologies that one might want to use, as well as mining students who could be hired as qualified trainers and field personnel in future processing plants.

The next step would be to build a plant, and this requires the purchase of land or construction of a floating platform on which the facility would be built. A floating facility could have leveling and vibration problems, which would affect the efficacy of both the shaker table and centrifuge. Another advantage of a land based plant would be that it would allow the plant operator to save the tailings for further reprocessing by milling, oxidation of sulfides, or cyanidation. This would further modernize the dredge miners and add a source of income that could help fund the maintenance of the plant. Optimization of mercury free processing methods would be greatly aided by analyzing gold concentrates for gold particles size distributions and shape, as these will affect the efficiency of various alternative processing methods. For example, fine, laminar gold remains in suspension more easily, and therefore turbulent flows in sluices and centrifuges will reduce concentration efficiency. In that event, slower feed rates would improve recovery.

This project should undertake a series of experiments in which concentrate from dredge miners is processed with various mercury free methods to test their relative efficacy.
Whenever possible, dredge concentrates should be equally split using proper mining sample preparation techniques (with which any laboratory or university mining department will be

familiar) and half of the sample processed with traditional mercury and panning, and the other processed with alternative processes. Careful documentation of these comparative studies would be a concrete demonstration to the miners, but perhaps more important, it would provide a model for present and future projects in other countries.

2.1.2 Gambling incentives

Dredge mining is a gamble; there are many days of meager recovery with occasional days in which profits are much higher. Miners also often gamble with their earnings, and therefore by offering gambling incentives could increase the participation of dredge miners in BIOREDD activities. For example, one could hold a draw each day in which miners that use the dredge material processing centre enter their names and mass of gold recovered to the plant operators, and each day or week a randomly drawn miner has his earnings for that day doubled. Usually their daily profits are fairly meager, so the project would not incur too much cost from this gambling exercise, and it could easily be integrated into the overall plant management and maintenance monthly costs which are covered by plant usage fees. Also, I recommend waiving plant usage fees for a limited time in order to captivate miners, and then to slowly increase the plant use charges over time (ideally in a transparent manner so that miners know what final costs to anticipate).

2.2 Improving gold concentration

The best way to reduce mercury and to measure the reductions is to convince as many dredge miners as possible to eliminate their mercury use completely and to give them the tools to do so. There are a few simple improvements that can be made to the sluice design that is currently used in Bajo Cauca: cobble screens, flatness and incline control, progressive size capture, sluice stacking, and flow to width proportionality optimization.

2.2.1 Cobble screen (cowcatcher, or 'mini-grizzly')

These perform the job that the 'grizzly' screen would in an excavator mining operation. It is a set of metal bars that sit on top of the sluice side walls above the main flow and below the exit of the header box. It should be built with a single high bar in the middle, other bars all progressively lower and curving gently toward the sides where they discharge the coarse rocks. This may still require occasional clearing by the operators. The advantage of this is that it removes large material that will cause vibration, acceleration, and turbulence which reduce gold concentration efficiency.

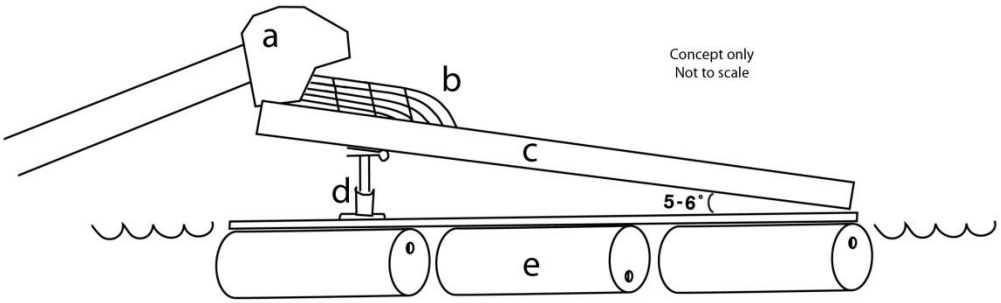

Standard Bajo Cauca mini-draga with two adaptations: Cobble screen and incline control.

a) Dredge conduit and crash box: this is where the dredged materials emerge onto the sluice bed.
b) The cobble screen (or cowcatcher, or mini grizzly): These rebar are parallel but higher in the middle, sloping downward toward the sluice edge, and curve outward at the ends. The spacing between the bars should be 2-3 cm, though this should be optimized in the field to ensure that water and fine material does not wash off the sluice as well. The bars should terminate just before or on the sluice edge so that fines and water that follows them drops onto the sluice bed.
c) Sluice box: this can be improved by making it straight with constant slope. This diagram shows the sidewalls.
d) Incline control: this could be a screw mount that raises or lowers the bed when turned, or a selection of different length of thick steel pipe that fit into sleeves on the hinge and the barge deck to provide the right inclination. The clinometer could be a weighted string or a piece of metal with a hole drilled in it, and loosely nailed in place. The optimal range of angles should be painted on in green.
e) Floatation drums: 6 of these are they typical means of floating the mini-draga.

2.2.2 Flat bed and incline control

Thicker sluice bed material or reinforcement would make the sluice straighter, and a hinge with pin/hole stays would allow the miners to adjust the inclination and therefore the flow rate of the material down the sluice. Flow rate should be such that the expanded metal gratings do not fill with light coloured sand, but don't clear so quickly that they are not capturing gold. This is a balance that also depends on the flow rate, which depends on the feed rate, which is a function of the power of the dredge pumps. Therefore this requires optimization for each different draga. Having an adjustable sluice bed enables this adjustment. As a rough rule, sluices should ideally have 1 cm of drop for every 10 cm of length, and less for higher flow rates. The ideal depth of flow is about 3 centimetres, and as laminar (opposite of turbulent) as possible.

2.2.3 Progressive size capture

Miners use the same size of expanded metal along the entire length of the sluice, however it could be more efficient to catch smaller particles with smaller sizes of expanded metal.

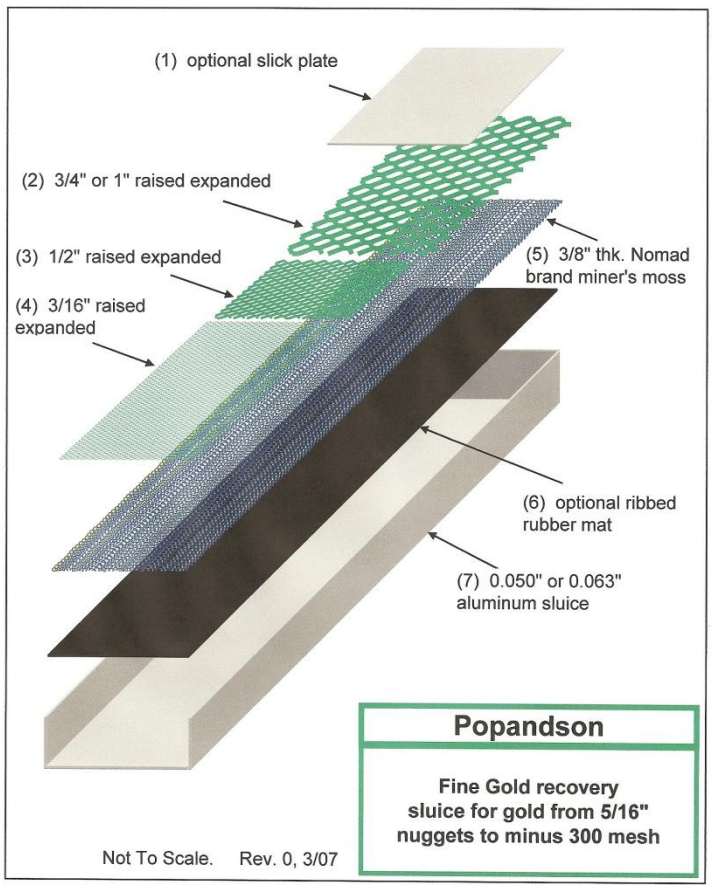

The main challenge is to optimize the other elements of the sluice (slope angle and flow rate), so that the smaller gratings don't fill up with light sands, and don't fill too quickly.

2.2.4 Flow to width proportionality optimization

As noted above, the flow rate affects the concentration efficiency, yet all mini-dragas have roughly the same width of sluice box. Therefore, having a wider sluice box for more powerful dredges that produce higher flow rates could improve gold recovery by spreading out the flow (thus reducing the flow depth and speed).

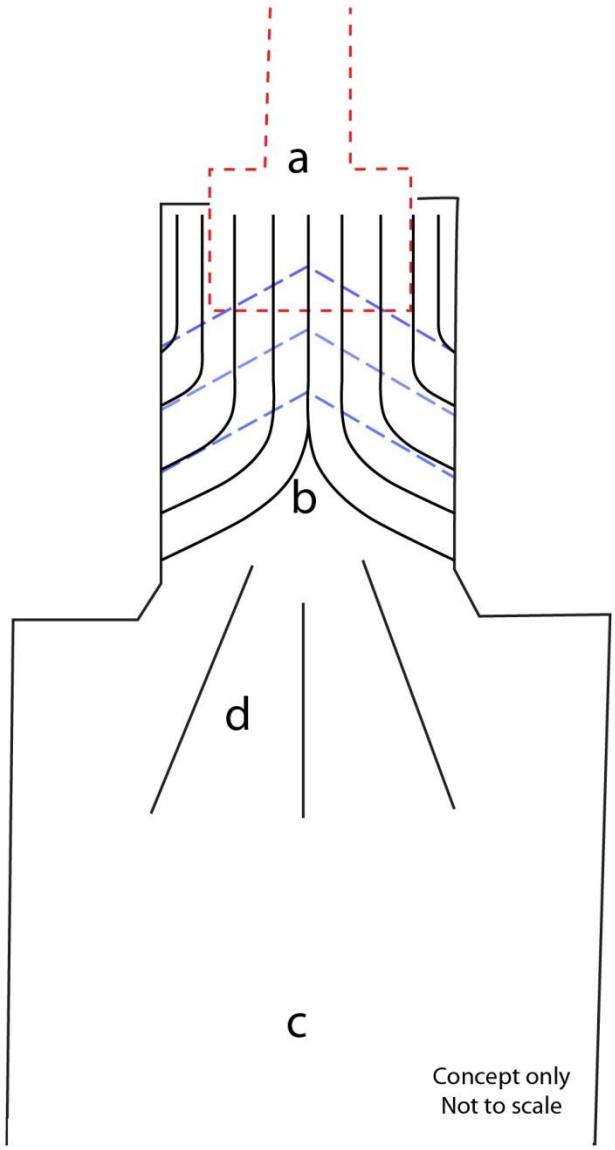

Dividing the flow could optimally redistribute dredge discharge to maximize flow over the concentration medium (expanded metal and carpets) and optimize flow depth. This design would be best for mini-dragas with multiple dredge pumps that will generate higher discharges of material to the dredge bed.

a) Dredge conduit and crash box.
b) Cobble screen: (cowcatcher) blue dashes are support bars that keep cobble sorting bars in a triangular configuration with the centre bars sitting higher than the bars closer to the edge of the sluice box.
c) Sluice box bed: wider to accommodate higher discharge at lower flow depths that optimize recovery.
d) Flow dividers: vertical metal walls to separate the flow for better distribution over initial part of concentration media (expanded metal and carpets).

2.2.5 Sluice stacking

Installing a Z sluice would cause a mini-draga to be unstable and possibly capsize. However they could stack modular sluices that could be taken apart when it is time to clean the carpets. These would need to be made of fairly thick aluminum in order to be light enough to lift for cleaning of the lower deck and also maintain their shape. Aluminum cannot be used for amalgamation as

mercury will erode it. The upper sluice would have a cobble screen under a raised header box (meaning that the dredge tube would have to be slightly longer to accommodate the extra height of the double deck sluice.) The first deck of the sluice would have the regular sized expanded metal holding down the carpets with wing nuts. The end of this deck would discharge large pebbles and stones to the river while the fine slurry would drop through a pebble screen. The sluice underneath would have smaller expanded metal gratings to capture finer gold, then discharge to either side of the dredge. Two half-width final sluices would be attached to the sides of the dredge and have smaller expanded metal to catch the finest gold particles.

Several tests should be run on at least ten different days in which immediately adjacent locations on the river are dredged by equally powerful dredges; one of which is a typical Bajo Caucan mini-draga, and the other of which is the BIOREDD minimax-draga. The dredge barges should be nearly touching each other, and should move together along the river to take up different material, and if possible the dredges should alternate positions. All of this will take more effort and operating time may have to be sacrificed in order to optimize the equivalence of the location and amount of material processed, therefore dredge miners should be employed to carry out these tests. Concentrates from both dredges should then be treated to exactly the same duration and type of secondary concentration.

The ‘gold hog’ was the inspiration for the stacked sluice. Using a Z-shape reduces changes the direction of the flow, thus increasing gold capture because most gold is concentrated in the first few metres of a sluice.

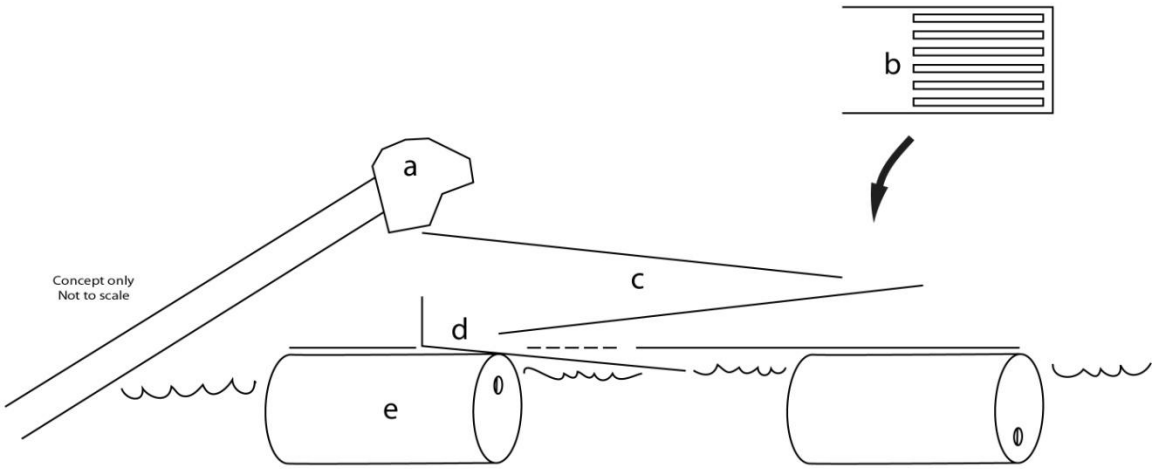

a) Dredge conduit and crash box: this is where the dredged materials emerge onto the sluice bed.
b) The cobble screen (or mini grizzly): These long and narrow slots in the top sluice deck allow the slurry to filter down onto the middle deck, but oversize material rolls off the end and into the river.
c) Stacked sluice box: Most gold is concentrated in the first metre of the sluice, when the slurry is slowest. The Z pattern of sluice changes the direction of flow so that each of the three sluice stages has a "golden metre" of slow flowing gold concentration. These would ideally be made of aluminum and custom built to fit securely in use and stowage. The crash box (the head of the dredge conduit where the dredged sediment comes out) needs to be lifted about one metre higher than normal, so this design is for dredges with 2 or 3 pumps.
d) Middle sluice deck: this deck spills the slurry onto a perpendicular sluice that feeds onto the two movable side arm sluices (that stow onto the widened dredge deck). These hang over the edge of the sluice and discharge directly into the river. The middle sluice should also be of thicker aluminum to bear the weight of the miners as they wash their carpets. Sluice boxes should be made of aluminum so that they are easier to move and because miners cannot use mercury on an aluminum deck (mercury amalgamates with aluminum and erodes; legacy mercury dredge up off the river bottom will mostly remain bound to sediment and the carpets, though over time this will cause erosion of the aluminum deck. Thick aluminum decks would increase the longevity of this design).
e) Redistributed floatation drums: 6 of these are they typical means of floating the mini-draga, though in this case the fore and aft drums are placed further apart to increase the stability of the dredge platform. The middle two drums are placed adjacent to each other on either side of the dredge centre-line, so that the side arm sluices can drop below the sluice deck. This configuration helps to keep the sluice deck height to a minimum.

2.3 Dredge Monitoring

Monitoring the impact of dredge mining operations requires establishing a baseline of mercury use and then counting the number of miners who eliminate mercury use in favour of modern alternatives. The baseline should be conducted by traveling the river and tracking the daily mercury use of several different mini-dragas. They would go out on the river in the morning, choose a small area where many miners are working, and gather key data from the miners using a standard questionnaire:

1. How much gold have they produced over the last few days, and how much mercury they used (broken down by day if possible)?
2. When did they start work that day, and when do they anticipate finishing?
3. How many dredge motors do they have?
4. How much money per day do they spend on gasoline?

The data collectors should patrol up and down the river, watching for operations that are pulling up the gratings in preparation for washing the carpets. Immediately after this they add mercury, so monitoring staff should try to be present when they add the mercury and measure the amount of mercury before they add it to the concentrate.

5. Measure the mass of the bottle of mercury before and after they add it to the concentrate.
6. Take photos and measure the dimensions of mercury bottle caps, as this is the normal means of measuring out the desired quantity of mercury. Make sure all photos have a 100 peso coin to provide the scale.

The data collectors should ask:

7. Are the bottles standard? How do they measure the mercury; in fractions of capfuls?
8. Measure the mass of entirely empty and entirely full caps.
9. Ask them to evaluate the fullness of the caps when they are measuring out mercury, take a photo, and note their fullness estimate.

The data collectors must keep interview results, visual and measured quantities clearly defined and separate so that the measured and interview data can be used to corroborate each other. Numeric measurements will be used to develop a function for converting visual quantifications into masses. These in turn will be used to quantify interview results, and estimate error margins and biases of interview and visual quantifications.
Each day, the data collectors should note the condition and history of the river (High water? Low water? Normal water height following a high water episode?) and try to sample in a variety of conditions over the course of the whole project.

2.4 Aquatic mercury monitoring

Although there are significant challenges and uncertainties, it should be possible to measure reductions in mercury contamination in the rivers of Bajo Cauca. It is important to note that this has never been attempted, however such an undertaking would be worthwhile if only for the valuable information it would provide as to the persistence and cycling of mercury in tropical aquatic ecosystems. Most research on ecosystem cycling of mercury comes from temperate ecosystems, and there are bound to be significant differences with respect to tropical ecosystems. However the nutrient richness and high growth rates endemic to tropical aquatic ecosystems would likely be favorable to such an effort. There are many issues to consider, including the mobility of mercury species and indicator fauna, the contribution of legacy contamination, and the rate of mercury mitigation.

2.4.1 Legacy mercury burden in sediment

Dredge miners tell us they cannot guarantee that the concentrate they produce is free of mercury even if they don't add any. The river sediments have been worked and reworked so many times that most sediment has some residual mercury that was released during past dredging. Therefore it is important to establish rigorous baseline mercury concentrations along the rivers and measure the changes in these concentrations. It is probably not possible to evaluate decreases in individual

sites, but instead the project should look at many sites and determine the average trend of mercury concentration over the course of the project, over the entire project area (with a strong focus on, but not exclusive to, areas where dredge mining is concentrated). Measurements should be repeated monthly over the course of the project to determine if there is a change in the overall trend of mercury contamination (an increasing trend over the entire project may still indicate project success if the rate of increase slows, even if the trend remains positive). There are also processes in the sediment itself that likely affect the concentration in sediment, such as percolation downward and evaporation (when sediment is exposed to air) and dissolution. This is a complex, poorly understood system, however if several pieces of evidence are used to corroborate each other, one could form a convincing argument for overall reductions in mercury in the aquatic system as a result of interventions.
Nevertheless, extensive research (including the 'Metallicus' family of studies) shows that new mercury is more available than old mercury, and therefore signals of mercury reductions should be apparent even in the short time span of the present project.

2.4.2 Mercury transformations and mobility

Elemental mercury is not very soluble in water, and yet studies have shown that the presence of elemental mercury can significantly elevate mercury concentrations downstream. Elemental mercury released in one spot tends to pool and stay down, and is therefore more likely to spread due to bedload transport, microscopic droplets in turbulent suspension, adhesion to suspended particles in the water column, and transformation into more soluble ionic species. The latter can occur in contact with dissolved organic carbon or bacterial action (particularly in anoxic environments such as marshes and oxbow lakes). Therefore one of the challenges of assessing the impact of mercury reductions in a given area is to determine the contribution of upstream sources. Given that ionic species are more soluble than elemental mercury, the relative methylation conditions upstream will affect the degree to which the local signal is drowned out by upstream mercury contributions. Methylation may also differ in the tropics, which adds another element of uncertainty given that the preceeding information was obtained in temperate regions.

2.4.3 Mercury in aquatic fauna

Fish swim up and down the river, and accumulate mercury over their whole lives. Therefore mature fish may not exhibit a decrease in mercury concentrations over 18 months. Also, some fish may range over large distances, meaning that they would not necessarily even reflect local conditions or changes. Therefore it is important to sample fish of different ages, and evaluate project metrics based mainly on fish that are a year or less in age. Also, preference should be given to aquatic species for which individuals of the species have limited ranges, such as crayfish. Using young and short-ranging aquatic species, it should be possible to detect changes in body burdens of mercury over the life of the project.

2.5 Dredge Challenges

Draga operators, as with many artisanal miners, often complain that they have no access to cleaner technologies or technical assistance. Yet they often reject alternatives because they require too much investment (or any investment at all) or they can't change their work habits. Establishment of a processing plant is subject to both of these challenges. Draga associations claim not to have funds or collect regular fees from members. Therefore they would need to extract contributions from their association, which could require significant political motivation. Fortunately, if a parcel of land on which to build a plant costs 10-20 million pesos, that could be achieved by a single contribution of 20-40 thousand pesos per 50-100 members. This would be more feasible when the river begins to recede after a significant period of swelling, as the miners would be more likely to be seeing more significant profits and more easily shoulder the weight of

such an assessment. Given such time sensitivity, I recommend purchasing a centrifuge and a shaker table before settling issues of plant locations as they are portable and useful for on-site demonstration equipment. This will boost faith in the project, serve as collateral for the investment that miners are making, illustrate the potential gains of a processing plant, and enable preliminary public awareness and miner training in anticipation of the establishment of a full plant.

Overcoming the challenge of changing dredge mining habits may not be as problematic as it seemed at first. Miners add mercury to the concentrate on the dredge bed itself, and obtain their amalgam at the end of the day. However miners are used to having several days in which they do not have any earnings because the river is too high or the deposits low in gold concentration. Furthermore, they are able to test the gold content of their concentrate by panning it in a shovel; they do this anyway as a way of determining the amount of mercury to apply. Therefore it might not be unreasonable to ask miners to save their concentrate for 2-3 days for further processing at the plant. If changing miner habits in this way is impossible it means that miners will have to line up to process their material when they all arrive at the plant at the same time at the end of the day. It would be useful to see how processing centres (entables) in Segovia manage this, as it may serve as a model that could be applied to a dredge mining plant.

Miners would also have to pay a fee to process their material in the plant, in order to fund plant maintenance and security. For such marginal operators, this could be sufficient disincentive for change. Therefore it is even more important that the project focus on education and proving to miners that their gold recovery will be superior at the plant than by using mercury on their dredge. Security is a major concern where the plant needs to be located far from a town site. The town of Guarumo is right on the river, and therefore is ideal in terms of security. Taraza, on the other hand, is a significant distance from the river and miners would either have to carry their concentrate or risk having their gold robbed on the way back to town. In such cases it might be advantageous to use proceeds from the plant to fund free or cheap shuttle services between the river and town so that they don’t have to carry their concentrate, and don’t risk getting gold stolen.

Finally, the draga association does not presently collect fees or hold a reserve of funds, so they may not be able to responsibly manage funds and maintain the plant. Many examples exist of communal, gifted equipment lying derelict due to neglect and absence of responsible parties to care for them. Therefore establishment of a plant should include hiring a staff member to act as caretaker and treasurer who would be paid out of plant revenues but whose training in accounting and equipment maintenance would be paid for by the project. Women are excellent candidates for this position because Latinos tend to trust them more with money. They often have a more long-term vision than miners, they often do not participate in mining and therefore have little access to independence, employment, and won’t simply leave their job to gamble with dredge mining.

A small excavator mine just outside of Caucasia

III. EXCAVATOR MINING

Alluvial mining on dry land (Excavator mining) represents the polar opposite situation to mini-dragas on the rivers, with the possible exceptions that most of the gross income in both situations is spent on equipment and fuel. Land based alluvial miners use squads of excavators to dig deep, steep sided pits from which the material is lifted into large Z-sluices that are lined with mercury coated carpets and metal plates. The whole primary material, with grain sizes from nanometers to tens of centimetres, is lifted by excavators into the top of the Z-sluice, where it is sprayed with high pressure water to create a slurry and separate the coarsest components (>5 cm) as it flows past a primary screen of parallel lengths of rebar. Sluicing with mercury ensures maximum possible mercury losses through attrition, as coarse sediment impact and erodes mercury from these surfaces. Screening of larger materials is generally insufficient, and screened coarse materials are incompletely washed and therefore coated with gold-bearing fines. The discharge from the Z-sluices run down a final long sluice, which may or may not have mercury coated carpets in the first few metres.

This is the ubiquitous setup in Bajo Cauca. Z sluice with mercury filled carpets or possible copper amalgam plates (or both), followed by a long sluice at the end.

Miners use high-pressure water to create a slurry in the top part of the sluice, however the slurry immediately tumbles into the sluice, causing poor separation of fine and coarse particles. This leads to losses of gold stuck to cobbles and losses of mercury scraped off carpets by stones bouncing down the sluice.

A typical production cycle is 2-3 days. On the first day, the Z and finishing sluices are lined with carpets that are coated with mercury, and excavators begin loading the sluice while water jet

operators spray the mix into a slurry. This is continued on the second and possibly third day, at which time the carpets are removed and cleaned to produce a concentrate. The concentrate is stirred to mix the mercury and facilitate amalgamation. The concentrate is then panned and the mercury is poured out and squeezed to recover excess and bind the amalgam into a ball. This ball is then burned to refine the gold, which is either melted into ingots or sold. Sometimes the concentrate is also milled to further liberate gold and then amalgamated and panned as before.

Almost all excavator mining operations in the region use the same methods, and some claim that their gold operations have been worked by their family for several generations. This is sometimes the reason miners cite for their entitlement to keep mining, and they point to adjacent land that their family worked in the past. Yet the techniques used to mine these deposits are clearly vastly different than those used even one generation ago and they claim that simple panning does not yield worthwhile amounts of gold. One mine we visited had an array of 15 or more adits dug into the foot of the pit wall, in which miners had tried to pan gold but gave up because it did not yield profitable results.

The Rio Rayo pit, with small Barrequero, (gold panner) adits in the top left corner.
Paradoxically, although they point to locations less than 500m away and claim that their parents worked that terrain, several different miners told us that their giant pits are normally excavated over a period of ~6 months. It was impossible to visually reconcile this claim with the small distance between their current and historical operations. Part of the explanation for this is that they are often re-working old deposits with more intensive techniques that employ heavy machinery in deeper pits. However these facts alone do not seem to resolve the paradox.

Furthermore, despite some being multi-generational miners on the land on which they operate, they mostly do not have legal title to mine (surface and subsurface rights are separate). The title-holders are absent and some are said to object to their land being mined as they receive no profit and ultimately bear the environmental cost. This is a curious situation, however, because holding land title itself normally incurs costs in the form of land taxes, title purchase and renewal costs. Therefore I suspect that some title holders must often have unofficial agreements with the miners. One miner suggested that many title holders lapse in their tax or title payments to the

government, but that this is overlooked either through bribery or lack of enforcement. There is also a formal, legal way to keep a title without having exploiting the resource. In areas where security is problematic, one can apply to defer the expiry of land title for a couple of years, and the cost of this privilege is very low. All of these factors pose significant challenges to any formalization program.

Mining techniques in this region, and in all artisanal mining regions, are the same in each operation, as miners tend to copy their neighbours. No miner is going to implement such major changes to their methods without proven local examples that yield equal or greater gold recoveries. This should be achievable without using mercury, however there needs to be a successful model using local primary material. This means the project must find an operator whose primary material has gold concentrations that are lower than or equal to the regional average, and who is enlightened enough to want to try new things and reduce their environmental impact. Rio Rayo mining operations represent just such an opportunity.

Ivan, the owner and operator of the Rio Rayo mine does not use mercury but instead only gathers concentrate with sluices and carpets, and then uses a spiral ‘automatic batea’ to concentrate the gold enough for direct smelting. His grades are about 50mg per cubic metre, and he claims that he could capture much more gold if he used mercury. His present operations represent an important example, and he is happy to have others visit his operations and learn from them. However, it would be even better if BIOREDD could help him to further improve his mercury-free recovery. Furthermore, his land restoration and secondary value added initiatives are also a strong positive example for the region.

The most significant difference in Ivan’s mining operation is the use of two large ‘Trommel’ (consisting of a giant rotating steel mesh drum where jets of water wash the fine material off the coarse material and into the sluices below.) The sluices are very short with high speed flows that still carry stones of 1-2 cm diameter, all of which would decrease the efficiency of concentration. This could be improved by further screening of stones, using Z-sluices with a finer scrubber sluice at the end, and/or a centrifuge.

Rio Rayo trommels.

The trommels are owned by an Australian miner who installed them in exchange for a portion of the gold profits.

Don Ivan and another operator in Caucasia who tried using a trommel had interesting and opposite experiences that are highly instructive. Both told us that at first the trommel didn't work for them at all: gold recoveries were so low as to not be profitable. Whereas the Caucasian miner simply rejected the trommel entirely (and apparently the equipment provider either did not attempt to optimize the system or was unable to do so), Don Ivan's equipment provider set to work with the welding torch and boosted gold recovery by adjusting the slope angle and shape of the sluices. This suggests two things: first, miners can be too quick to reject new technologies if they don't work, they are not prepared to do the trial and error work necessary to optimize them for their deposit, and so they need sustained technical support to be convinced of their efficacy. Second, miners need to be fully educated as to the science of gold recovery so that they can optimize their equipment on their own. In Don Ivan's case there is probably still more that can be done to improve recovery.

Closeup of Rio Rayo trommel and sluice. It would be easy to add a shallow Z, or pass this slurry to a centrifuge and extract more gold.

Don Ivan is also special in that he conducts exploration using modern methods. He has paid for electromagnetic induction (EM) surveys for his property and uses this to prioritize the locations that he mines. EM exploration uses electromagnetic induction to detect metal concentrations at depth, and can be mounted on airplanes for large-scale low resolution surveys or on shoulder mounted booms for small scale and fine resolution detection. Most miners 'explore' by keeping track of how much gold they produce daily or weekly and exploit different locations if their profits cease to meet expectations.

The adjacent operation (1km away, across the road) provides a useful antithetical comparison. The concentration of gold in their deposit is about 150 mg/cubic metre, and they use four excavators in a bucket brigade chain to bring the material up into the Z sluice.

The excavator bucket brigade. One more excavator upslope out of picture on the right digs the material up and into the Z-sluice. This is typical of Bajo Cauca excavator mines. Miners believe that moving more material is the only way to higher profit.

The Z is lined with carpets ('brazilian type', according to them, containing mercury ~50Kg) and a long sluice afterward that has mercury coated carpets in the upper few metres. The last sluice is long and steep, and the 'miner', meaning the one who runs the operation and either owns or leases the equipment, lets the workers have all the gold trapped in the lowest 1/3 of the sluice, where the speed of flow is the highest and gold is least likely to be trapped. This operation also has a massive front-end loader to move waste material and back-fill the old excavations. Ivan told us that they were working the material we saw for the second time. They all know that they lose considerable amounts of gold with the methods they are using. The waste material that is blocked by the first 'screen' (cobble size) is coated with mud and presumably this poor washing is one major source of gold losses.

3.1 Excavator impact mitigation

As with Dragueros, mercury reduction is unlikely to be a viable, measurable option. Instead, the best and simplest approach is to replace mercury altogether with proven alternatives that offer superior recovery.

Increasing the efficiency of dry land alluvial mining operations is important as it will allow miners to earn more per unit disturbed area, and therefore they would not have to disturb as much land for the same profit. The hope is that this would slow the rate at which they disturb the land because they would spend more time maximizing their recovery rate in each location. Shifting investment away from more excavators to more efficient processing equipment would necessarily decrease the amount of material moved. Increasing production would also build trust in BIOREDD and other initiatives that aim to reduce contamination and devastation of the land, thereby facilitating formalization and preservation initiatives. Greater profit margins would also

make operations more amenable to landscape restoration and secondary income generating activities such as rubber and timber plantations.

The first thing that must be done is to replace the highly inefficient process of using excavators as a bucket brigade to pass the material horizontally and vertically into the Z-sluice. One option is to build a low angle road that spirals along the edge of the mine pit and truck the material up to, and dump directly into, the sluice. Another solution would be to build conveyor belts to carry the material directly to the sluice, or to use hydraulic monitors (basically giant power washers) and pumps to carry the slurry into the sluice. The first two options require considerable forecasting and planning and so most operations are unlikely to find them attractive. Many of these mines have a dump truck already, so building a road is the easiest option. However, the gradient of the road must be shallow and constant enough to allow trucking during heavy rains, and often the tires are too worn out to provide sufficient traction. There is also considerable risk to the operator if they maintain the dangerously steep pit walls that are common.

The second option requires careful planning of the conveyor belt and sluice sites, however this option would only require one excavator for digging, and a small front end loader for moving material to the belt, which would be a very significant savings in equipment and manpower. One drawback of this option is that wet and muddy fines would stick to the conveyor belt and drip off the bottom or be stuck in an infinite loop.

In both cases, they could use a 'trommel' with sluices and centrifuge concentrators for a similar or lower cost compared to an excavator chain. This would undoubtedly result in higher gold production and enable complete elimination of mercury.

The third option, using pumps and high pressure water jets (hydraulic monitors) is very commonly used in the Amazon and thus is easy to use and appropriate to the artisanal mining context. There is some question as to whether the large coarse materials (cobbles and small boulders) would cause difficulties, but this could be solved with a small excavator or front-end loader. The slurry would have to be well mixed by occasionally agitating it with the water jet, however this is likely the lowest cost alternative that requires the least planning and organization. Creation of a slurry for pumping has the very significant advantage of sorting out larger fragments before sluicing.

Of course, the sluice itself is badly in need of a redesign. It goes without saying that mercury must never be used when sluicing. The 'slurry first' option would also greatly improve recovery and reduce losses of mercury. This would eliminate the coarse materials that erode mercury off the carpets and plates. It would also increase the efficiency of concentration through greater contact of the material with the concentration medium and by decreasing the speed and turbulence of the slurry flow. Furthermore, it would eliminate the energy cost of hauling cobbles up into the sluice. Miners are particularly sensitive to fuel costs as they are their fastest rising expenditure.

It would be useful to find out the local purchase and lease costs of all of the equipment that typical operations employ, and perform a simple economic analysis based on this and the estimated gold content in the mined material. It should be fairly easy to show miners that their profits would increase if they used the alternative methods outlined above. However it also poses the risk of exposing operations as having net negative profit which would suggest that they were little more than money laundering operations for illegal activities. Therefore careful discretion should be used when discussing and disseminating such economic analyses.

Another option is to find an operation that has two sluice systems, or to install a second one at any operation that will agree to it, and ask the miners to use one of them without any mercury. These sluices would then be fed alternately from the same source, and the recoveries compared at the end of the production cycle. The project could entice the operator by offering to compensate them for the difference in production and paying the operating cost of the mercury free sluice. The mercury sluice would follow the same process as usual, and the mercury free sluice would finish by concentrating with a centrifuge, shaker table, automatic batea, or by the traditional mercury method. By conducting a complete mercury mass balance for both processes the relative gold recovery and mercury losses could be established. It is entirely possible that using mercury in the carpets does not actually improve recovery in these operations, as mercury is inefficient at capturing fine gold and mercury containing gold is likely lost by attrition (fine droplets of mercury being eroded and carried downstream in turbulent flows).

A similar procedure should ideally be followed for any alternative method tested in this project. Side by side trials in which scoops of material are alternately loaded into the conventional and alternative processing methods in whole number ratios (ideally, 1:1, but miners may want more material to go into their system to avoid losing money). At the end of one processing cycle (usually miners clean the sluice carpets and recover gold every 2-3 days) the relative recovery rates can be compared after adjusting for the loading ratio.

TDI Equipos Mineros showed us a fantastic CAD design of a mobile alluvial plant on wheels (though it could also be made on skids for less cost. This would require an excavator to load it on a flatbed truck, which would incur future costs, difficulties, and possible delays). It is an integral alluvial plant which has a grizzly filter (funnel and grating that separates coarse material), followed by a trommel which discharges the slurry of fines to two fold-out sluices and a fold-out coarse material conveyor belt. The sluice tails could be pumped to a pair of centrifuges or shaker tables to capture the remaining gold (as per the video on the ICON website: http://www.iconcentrator.com/media-icon-gold-recovery.html). This would be an excellent symbol of the project, with lots of room for logos of all participating municipal, regional, federal, and international organizations. It would be fantastic publicity, in front of which all officials and mining associations would want to have their pictures taken. I highly recommend purchasing this equipment as soon as possible and trucking it around to any operation that will allow you to test it out on their material. TDI has extensive experience with small and large scale mining (they currently have a contract to build an entire plant from comminution to concentration and floatation for an Azimuth minerals mining company (Canadian) in Sur Bolivar), and they pledge their support in the field to help with the inevitable trial and error optimization that this equipment will require.

It is up to this project to take on the risk of buying alternative processing equipment and carrying out the trial and error optimization that is required. Furthermore, this process of experimentation must be documented in detail to give the best possible guidance to operations that aim to replicate the techniques. This includes detailing failures as rigorously as successes; too many projects do not report their shortcomings, which then let others repeat the same mistakes.

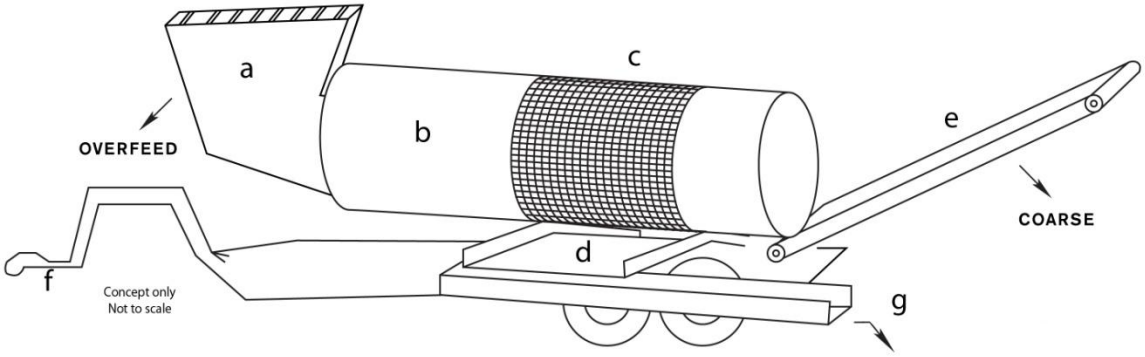

Mobile alluvial gold concentration plant

a) Grizzly sorter: strains out cobbles.
b) Trommel: water spray scrubs fines off coarser fraction.
c) Trommel: slurry with fines fall through the mesh.
d) Sluices: side arm sluices are removable and hang on trommel sides during transport. Only one sluice is shown, however there is an identical one on the opposite side. Both should have a clinometer and adjustable incline.
e) Conveyor belt: piles coarse materials for transport as backfill.
f) Hitch and wheels allow the plant to be easily moved to new locations or hauled away if the military are coming to destroy your equipment.
g) Hoppers and slurry pumps feed the sluice overflow to centrifuges, perhaps first going through a hydrocyclone to separate the clays. The concentrate feeds to a shaker table or automatic spiral batea.

3.2 Dredge mercury monitoring

Setting up a baseline and counting the number of operations that change to mercury free techniques is the best option for measuring project success. It is likely to be possible to simply reduce the amount of mercury applied to the carpets without reducing gold recovery. However, miners will expect to capture less gold, and to be more sensitive to lower recoveries that are in fact attributable to natural variability, thereby confirming their bias even if average actual recovery is equal or slightly higher. By this logic, or by natural reversion to old methods, mercury use would probably rebound after a short amount of time. Furthermore, it would be very difficult to monitor a large number of mining operations, as their schedules are variable and locations separated by large distances.

Baseline mercury use should be assessed over at least 5 production cycles at 10 different operations, with a second round of assessments whose sample size will depend on the variability of the first set. The optimal number would be 30 production cycles on 10 separate days for each. A typical production cycle is 2-3 days, but the monitoring staff only need to be present when the miners load the carpets with mercury and when they remove them and refine the gold. This is the recommended procedure:

1. Weigh the vessel(s) in which the mercury is contained before and after the mercury is applied.
2. Measure the mass of excess mercury obtained by squeezing the amalgam.
3. Measure the mass of the amalgam before and after burning.

This will allow measurement of the quantity of mercury that is lost during the burn and the combined quantity that remains on the carpets and is lost in the tailings. Given that they apply approximately 50kg of mercury to the carpets, monitoring staff will either need a single scale with high precision and a high load capacity, or two scales of fine and coarse precision. If the mercury is contained in many small bottles, as is often the case, a single high precision, low capacity scale may suffice to weigh them in series.

The above monitoring protocol should be repeated at least five times during and toward the end of the project, with the obvious variations depending on the intervention applied. If miners reduce the mercury applied to carpets, then the entire procedure should be followed, if they only apply mercury to the concentrate, mercury containers should be measured before and after mercury is applied as in step 1, followed by steps 2 and 3. If an operation switches to mercury free techniques, then occasional verification visits should be done to confirm that they are continuing processing material without mercury. This is a sensitive issue as it would ideally involve unannounced visits, which might be anathema to cultural values and collegial relationships that have been carefully built. Possible verification options include installing small copper plates under the carpets, which would turn silver if mercury is used in the carpets, or using the Lumex to measure mercury concentrations in air when the carpets are not under a slurry or water. The latter must first be tested on carpets in conventional mercury-using operations to obtain a baseline for carpet emissions before mercury is applied. This option is more uncertain, as carpets may carry a residual burden of mercury even after an operation ceases to actively apply mercury.

3.3 Excavator mining intervention challenges

First and foremost, the main challenge is legalization. The issue of mining titles is complicated and cannot be solved for most mining operations in this area. Yet this is the only way that miners

can have a sense of security that will enable them to invest in alternative technologies. There are ever increasing pressures, originating from evolving legislation that criminalizes 'illegal' mining, and ever more aggressive public pressure to prosecute and halt this activity. The national news organizations regularly publish horror stories of the devastation caused by illegal mining, and trumpeting their links to guerillas and organized crime (including prime time news pieces showing military operations blowing up excavators and dredges). It is true that these activities fund criminal organizations but this is done through extortion, not by direct or voluntary complicity. Miners who do not pay extortion will have their equipment destroyed or confiscated, and they face the same fate if they do not bribe police and military officials who seek to apply the law. Harsher legislation will not change the situation; it will only enable the latter to extract higher bribery costs. This amounts to an indirect taxation that is unjust and which does not serve the public good (arguably, corruption erodes the public good). At the local and departmental level, miners are the main driver of the legal economy, while miners are vilified at the national level.

Various sources, from miners to equipment manufacturers and government officials, understand that the miners are only interested in purchasing equipment that increases the volume of material processed. TDI Equipos Mineros told us that often when they try to convince people of the benefits of higher recovery using advanced processing equipment, they tend to balk at the cost and gripe that they could make more money by buying another excavator for a similar cost. In developed nations, mining licenses always stipulate minimum recovery rates to avoid the tendency for companies to focus on volume rather than efficiency. Therefore, the main challenge for this project is to break this tendency in people who do not respond to such administrative solutions. Furthermore, most miners seem convinced that their situation is unique and that their current practices are superior to any alternative. Success will depend on a concerted education campaign that focuses heavily on demonstrating the effectiveness of alternative techniques and bringing all of this to the miners' own operations. In the end, slowing the rate of land disturbance means convincing miners to spend more time in one place by spending more money on efficient processing and less on excavators. The main challenge is to make a solid and high confidence economic argument in favour of efficiency. Fortunately, all miners acknowledge that they lose at least half the gold that is in their deposits, and therefore if this project can document a greater recovery rate relative to this imprecise estimate it will have the greatest chance of propagation during and after the project term.

IV. BAJO CAUCA GOLD SHOPS

Detailed documentation of gold shop practices and proven mercury reduction methods and assessment are given in a separate document on UNIDO's work in Segovia. Here, I present new information on Bajo Cauca gold shops and specific recommendations for new mercury mitigation strategies.

4.1 Caucasia gold shops

Caucasia has a large number of gold shops, mostly clustered in the centre of the city near the Cathedral, which present a significant potential risk to human health. Fortunately, almost all of the shops have a mercury condensing system that is somewhat effective and most insist that miners burn their amalgam before bringing it to sell in shops. Together with a representative of CorAntioquia's Caucasia office, we visited 6 gold shops within one block of the Cathedral, and gathered information about their practices, mercury filters, and rates of mercury capture.

The original design for the stainless steel mercury condenser system that is ubiquitous in Caucasia, and which has also spread to Segovia, apparently originated at a university in Medellin. However there are at least two fabricators in Caucasia that produce them, and the condensers of this type that I had seen in Segovia were said to have come from Caucasia. They consist of a fume hood with a door that closes to minimize losses from the hood face, a spray box in which fumes pass through a rain of water emanating from PVC pipes, and a fan that sucks the fumes out of the fume hood. We checked for negative pressure at the fully open hood face by waving a smoking rolled up paper in front of it, and we found that the suction was adequate. Closing the hood face door reduced the hood opening by >75%, and therefore suction would be even more efficient. Although mercury concentrations in the Segovia shops that had this system were lower than in any others, those shops also told us that they don't accept unburned amalgam.

The standard Caucasia water scrubber mercury condensing system

All the gold shops we visited in Caucasia also made the same claim, and the president of the local chapter of the association of artisanal miners (Asominero) told us that only a handful of gold shops locally accept unburned amalgam. This is positive news, however it also conflicts with another bit of information provided by the mini-dragueros to whom we had spoken earlier. The mini-dragueros claim to use only mercury that has been recovered from amalgam burning (which they also think is superior in terms of its capacity to recover gold), and that they buy this from gold shops in Caucasia. If that is true, where are these shops that recover large amounts of mercury for resale?

The president of Asominero told us that they have been compelling all the gold shops in town to install mercury condensers, and to never accept unburned amalgam. He told us that only a few still accepted amalgam, and that one could know which ones based on the enormous lineups that formed at these shops at the end of each day. Mini-dragueros obtain small bits of amalgam every day and sell it as soon as they get off the river, thus the evening line-ups. We saw one of these shops, pointed out to us by the local Asominero president. It had no filtration system, but we did not go inside because there were burning amalgam at the time we passed. This shop is located immediately beside the Cathedral, and therefore poses an acute risk to local people.

In one 30 minute period of walking around the gold shop neighbourhood on a Wednesday morning, I observed 3 gold burning events in different shops. Even if this is a somewhat anomalous confluence of events it suggests that the rate of gold purchase and roasting is very high, and therefore the mercury emissions would be frequent.

1.2 Gold shop visits

4.2.1 Compra Dagani

This gold shop is located on the street that parallels the river, in the adjacent block to the Cathedral. This shop owner greeted us with extreme skepticism, stating that many people interested in mercury had come to speak with him before and promised that they would not speak ill of their operation, but afterward they published damning results. He nevertheless warmed to us and gave us a tour. This shop uses the standard condenser system described above, and they estimate that they recover about 1 pound of mercury every two months, depending on the quantity of gold purchased.

4.2.2 Compra de Dona Pilar

This compra has the standard condenser and does not accept amalgam. They explained to us that the water in the scrubber box rains down from 2mm wide holes. I have never seen into one of those boxes, but I had seen a similar one being built that had holes of this size. If this is the standard size for this type of system, the mercury removal efficiency is probably not very high, and much of the filtration effect would be largely due to mercury cooling in transit on the walls of the exhaust tubes. The efficiency would be greatly improved by using much smaller holes such as in an atomizer or spray bottle used in house cleaning products. This shop has a long exhaust pipe with two fans in series: one at the fume hood and one half way toward the door. The shop manager worked in a windowless office with air conditioning near the burn room, and I explained to her that it was important to keep the door closed during burns and to properly ventilate the whole shop, including changing the air in her office whenever sufficient time had passed for the air in the adjacent room to be expelled after a burn.

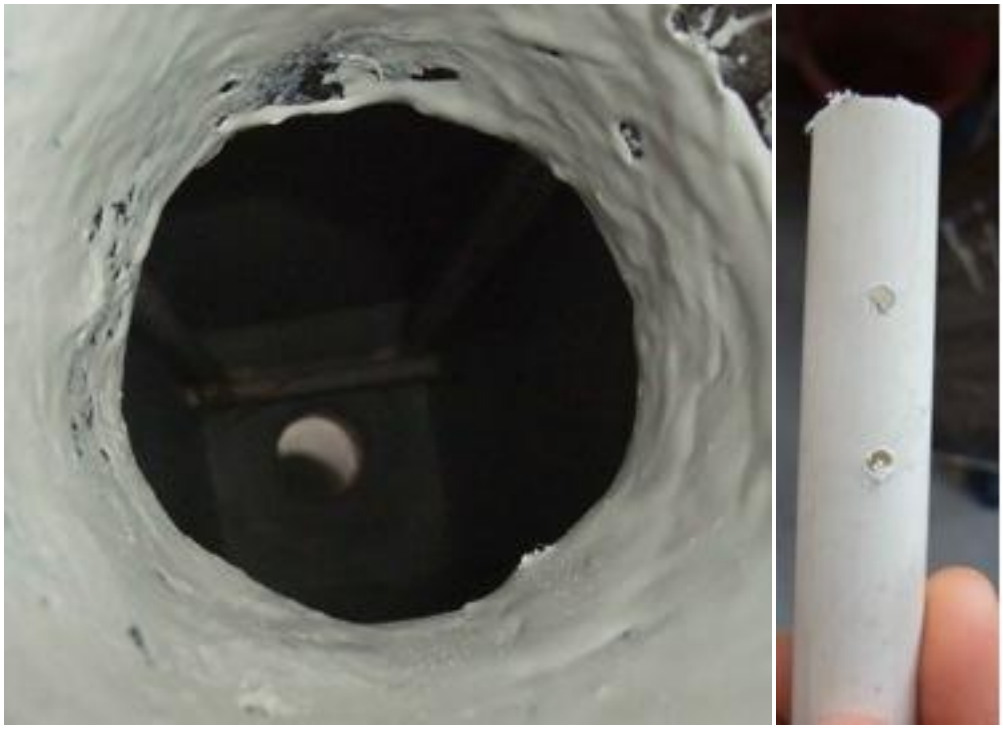

This water scrubber system was being built in a gold assay lab of a gold shop in Segovia. They lined the metal tubes and spray box with fiberglass to prevent corrosion, as they planned to spray

alkaline solution with the intention of extracting the nitric acid fumes. Needless to say, these holes will not make the kind of mist that they think would efficiently remove contaminants from the airstream.

4.2.3 Compra El Castilo

This shop had no filter, nor any chimney.

4.2.4 Compra Aguaca

This is a well ventilated gold shop on a street corner, with glassless security bars instead of walls, and therefore the mercury contamination in this shop would be expected to disperse rapidly. Nevertheless the owner was building a standard condensing system in order to comply with the wishes of the local mining association.

4.2.5 Compra (Name Unknown)

The last gold shop we visited (name unknown) claims to be the first one to install the standard water scrubber type mercury condenser, and this is evident by the obvious older age of the unit. They explained to us that they also use a retort inside the fume hood when burning gold, and they do not accept amalgam. However since he also told us that he recovers up to 15 pounds of mercury per month in a busy month, unless he buys an incredible amount of gold I suspect that he must be accepting amalgam also.

Apparently this is the first such scrubber; on the right is the retort in which they ‘do not’ burn amalgam.

4.3 Gold shop mercury mitigation

The first priority in reducing mercury contamination from gold shops is to stop them from accepting un-burned amalgam. Most of the gold shops in Caucasia already refuse amalgam, as do some in El Bagre. One of the main reasons for the impressive decline in mercury concentrations in Segovia is the institutionalization of the ban on amalgam burning, as well as the use of retorts for roasting amalgam and zinc precipitate. It may therefore be difficult to reach the target reduction of 20% as specified in the project goals, however measurable decreases are likely possible.

Water scrubber type mercury condensers can be improved by drilling more, tiny holes in the PVC pipes using ultra thin sewing pins that have been made red-hot using torches. Existing holes should be filled with epoxy, and then similarly pierced with hot pins to make new holes of the correct size. More holes are better. Obviously this method needs to be tested on PVC pipes before using it on existing scrubbers, and variations can easily be imagined that produce the same results. The goal should be to create many more holes per unit area then there are currently, and to ensure that the water pumps provide enough pressure to produce a fine mist.

The best chance for marked improvement over the life of the project is in El Bagre, as they don't all use filters, and those which exist can be improved. In Caucasia, the greatest mercury emissions reductions would come from installing high quality gold shop condensers in the ~3 shops that accept amalgam and somehow convincing dragueros to burn their amalgam in the field before bringing it to gold shops. One way of achieving the latter is to install communal retorts near their point of embarkation on the river where they work. The communal retorts could be integrated with the Draga processing plants, or established separately (which would be the superior option if the processing plants are near human habitation.)
The gold shop filters everywhere are insufficient and there may also be more improvements to be made in the entables. Oseas Garcia will know which ones to focus on given his experience in the UNIDO project, and one can also look at the maps that I produced to see which entables have achieved the least reductions in mercury emissions.

4.4 Gold shop mercury monitoring

It would be useful to go from shop to shop measuring mercury concentrations that exist inside at times when no mercury is being burned. The airborne mercury concentrations that result from indoor amalgam or raw gold burning are well known, so personnel should never expose themselves to this hazard for the sake of measurements. Non-burning ambient concentrations are more than sufficient to evaluate the hazard and the effective efficiency of the mercury condensers. Where filtration of mercury is insufficient, levels of mercury in shops are normally near to or greater than 10 $\mu g.m^{-3}$.

In Segovia, 24 hours of monitoring data taken over ten days in three successive years was sufficient to demonstrate that mean mercury concentrations had fallen by approximately 50% over that time. Higher confidence could be achieved by spreading these measurements out over several months in the pre-treatment period in order to assess the long term variability of the measurements. It is important to note that these 24 hours of measurements represent at least 30 transects, and that many more transects were not included because of instrument failure or problems with the data. The normal procedure was to begin at 8 am, and drive monitoring transects all day with a one hour break for lunch, and continue until 5 pm. This schedule was varied on several days in order to span the lunch period and to sample early morning and evenings from 5 to 7pm when most gold shops are closed. Each transect followed more or less the same route, which focused on the core of Segovia and all roads where entables are found. Once in each transect the operator would choose a route to outlying neighbourhoods that were not in the main transect circuit and sampled there. The extra neighbourhood transects were alternated to give a more complete picture and to try and detect mercury signals from people burning mercury in their homes.

For this project, I recommend increasing the total transect time in Segovia by at least 50% and spreading the baseline transects over at least 4 months. Project evaluation data should include at least 24 hours of transect data taken over a one month period, and of course, more is better.

In El Bagre and Caucasia, given the small size of the gold shop areas, complete coverage should be possible in 20 minutes or less, and the target total transect time can be less than that of Segovia. Therefore I recommend doing three laps of the transect route and then waiting an hour, then repeating over the course of the day. The transect route should be chosen so that it passes all gold shops with as little repetition as possible. Once during each sampling run (after completing 3 laps) the operator should choose a route that explores nearby neighbourhoods in search of mercury signals from peoples' homes. The end result should be fairly complete visual coverage of the entire urban zone and good coverage of nearby residential areas. In El Bagre, the roads in the gold shop area are very narrow and difficult to navigate with a normal vehicle, so I recommend using a mototaxi instead. Care should be taken to pad and tie down the Lumex well in order to prevent damage. As in Segovia, I recommend doing a baseline study over several months to assess variability, and then doing the evaluation study of at least 16 hours of transect time taken on ~10 sampling days over a period of about one month. Special attention should be given to the afternoon period between 4 and 7pm when Dragueros finish their work on the river.

V. LAND RECLAMATION RESOURCES

There are three main operations in the Bajo Cauca region that we have identified as having strong potential for value added land restoration, community development, and increasing biodiversity: Minas Rio Rayo, Jardin Botanico El Bagre, and Piscicultura Don Alvaro. (The latter are not official names, however Oseas and Victor will know who and where these are.)

5.1 Minas Rio Rayo

Located near Taraza, this is an operational mining area, in which one of the mine operators (Don Ivan) has renounced mercury use, implemented modern extraction techniques and backfills old mine pits, replants with commercial tree species, and raises honey bees. The alternative extraction techniques are shown in the report on land-based alluvium mining operations, and this section focuses on Don Ivan's forestry and apiary endeavours.

Backfilling mine pits at Rio Rayo.

Rubber plantation on old backfilled mine pits at Rio Rayo. Note that the trees are growing without adding any topsoil or treating the land in any other way.

Rubber and acacia are the primary species Don Ivan uses to replant degraded mine sites. He has a strong preference for rubber because it provides a source of income and employment for local people during most of its lifetime, and after 30 years it can be harvested for timber. Seedlings are raised in bags of good soil to facilitate transport and planting, however the land into which they are planted is not rehabilitated at all before the seedlings are placed in the ground. Remarkably, the bare, stony ground still allows the seedlings to take root and grow, as evidenced by healthy stands of trees that we viewed at previously replanted sites.

Don Ivan had some interesting commentary on other replanting efforts and environmentalist visitors to his operations. First, he noted that it was common for others to plant acacia for its high timber value, but that this is false economy as rubber provides livelihoods for local people in pre-harvest years. Also, some visitors who were interested in biodiversity suggested that he was creating a monoculture of exotic species that did not support local endangered species (which they proceeded to list and explain their importance.) Don Ivan commented that the only species they didn't mention was the human species, and that the environmentalists ignored the fact that among the undergrowth of the rubber was a rich mix of native shrub and tree species that recolonized the area on their own.

Don Ivan also has a complete milling and curing kiln facility where he produces various wood products for direct sale to the local and regional market, as well as finished products such as apiary boxes and high quality artisanal wooden doors.

He also uses the apiary boxes to breed and raise bee colonies for propagation and for honey production. Their breeding program focuses on improving honey quality, robustness, and tameness. Their bees are Africanized, which is difficult to avoid in this region, but has the

secondary advantage of strongly discouraging honey thieves with their aggressive behaviour and high propensity for stinging.

Don Ivan could be a strong positive example for other local alluvial miners, and he is happy to invite other curious miners to see his operations. Rio Rayo is also clearly open to trying new and improved gold recovery techniques, and would therefore be an ideal place to optimize the use of equipment that they have, save money on excavators by installing conveyor belts or using dump trucks, improving their sluicing, and running their effluent through centrifuges to capture more gold. This should begin with a full metallurgical analysis to better understand the size distribution and shape of gold particles. Using a centrifuge to recover gold in the sluice effluent would be a good first step in determining the amount of gold lost by the current sluices. Adding a scrubber sluice with finer grating would also be worthwhile. The existing sluices are very short, and do not have the Z-shape that slows the flow down and increases recovery as in operations that use mercury, therefore building stacked sluices as suggested in the dredge mining section could be another positive contribution.

5.2 Jardin Botanico El Bagre

This is a small plot of land on the outskirts of El Bagre where locals have begun to grow seedlings of native plants that have become rare during their lifetime. Having noticed the disappearance of many tree species, as well as the bird and animal species that relied on them, these locals decided to seek out and propagate rare and important trees on their own initiative and without any external funding. They have a network of campesinos who help them by bringing leaf and seed samples of rare or unusual species that they find as they travel through the local hills. Based on this information, they then go locate and collect seeds and seed pods from these trees, and then germinate them in their small plot. Originally they had tried to create a seed bank, but very soon they realized that they didn't have the technology or know-how to preserve seeds properly and that the only way to preserve the species was propagation. They focus their attention on species that produce fruit on which local endangered species rely, although they put it more simply:

"Eventually we noticed that the trees, birds, and animals that we would see all the time as children were now nowhere to be found [the speaker is probably around 30 years old]. Now you would have to walk for days to see any of them, and there are some trees we have just never seen again."

They showed us seedlings from at least ten different rare indigenous tree species and explained their understanding of the ecological value of each. One species of indigenous 'coco' builds up the soil 3x faster than acacia (they cite a University of Antioquia study), which they claim creates desert monocultures that do not support local biodiversity. They showed us a 'wild grape' that is an important food source for species such as toucans, and whose fruit is also edible and delicious for people.

The El Bagre Jardin Botanico has also built a fish-rearing pond to raise edible fish species to use as barter exchange for the labour that local people put into their operations. At present they are still paying out of their own pocket for people to collect, propagate, and care for seedlings, as well as for general site maintenance. They themselves are not rich people; they can barely afford to maintain their operations and they rely heavily on the goodwill of like-minded people. They are trying hard to find ways to fund and grow their activities.

Though we did not find out details in our short tour, this group is apparently working with the University of Antioquia and the local botanical garden, providing rare species for planting and preservation. These, however, are not revenue-generating relationships.

The argument against native species in favour of acacia and rubber is that those species can colonize barren ground left over after the ravages of mining. The El Bagre Jardin Botanico claims that some of their species can fill the same role, and that they support the return of other native species.

USAID could help the El Bagre botanical garden by purchasing their seedlings and replanting them at degraded sites. Strong candidate demonstration sites could be provided by Don Ivan's Rio Raya rubber plantations, where indigenous species could be planted along the periphery so as not to interfere with rubber production and harvest, while supporting biodiversity of indigenous species (there is often also better soil at the periphery of old pits that might be more amenable to less robust native species). Even modest support would go a long way toward advancing the success and sustainability of this enterprise, and USAID could begin much needed and rigorous research on the use of native species in reforestation of degraded sites. Planting a small peripheral portion of sites with native species would demonstrate their ability to grow under difficult conditions, support a grass roots biodiversity restoration initiative, and provide vital research and concrete models for future reforestation projects.

5.3 Piscicultura Don Alvaro

Don Alvaro has a remarkable and, in the context of Bajo Cauca, an altogether too familiar story. He owns a large plot of land across the river from the town of Caucasia, which has been in the family for generations. When he was a child (he is nearing retirement age, although he does not have enough money to retire) there were neither paved roads, nor even a bridge across the Cauca River, and his land was still largely covered in tall, lush original forest. Don Alvaro remembers it as a much different place; cooler, with more rainfall, more lush vegetation, and crystal creeks gurgling and winding through forested gullies. One day people came to his house, killed his father, and told the rest that they would share the same fate if they did not leave. He went to live with family who owned coffee plantations, and there he saw firsthand how aquaculture can be used to supplement incomes and provide a healthy diet for locals. Years later he returned, hoping to resettle there and resume his life. To his horror, much of his land had become a barren moonscape of disorganized pits and hummocks interspersed with dry, cracked mud and piles of cobbles. Worse, it was still swarming with miners who were feverishly digging shallow holes, panning, and amalgamating the gold. Obviously, there was no way to evict all of these people even if violent retaliation was not a likely possibility.

Don Alvaro then consulted one of the larger mining operations nearby, who had excavators and dump trucks, and offered to help him get his land back the only way they could imagine: exhausting the gold as fast as possible. Knowing that artisanal miners, then as now, are only interested in quick gains for the least effort, they offered to excavate the top few metres of his land and trucked it to a far corner of Don Alvaros land so that the miners could use their contaminating processes in a place where the contamination would be more contained and drain away from his property. Soon, all of the easily obtained gold was gone, the miners moved on, and he could start to rebuild.

Left with a property full of holes and access to an excavator, he built fish ponds, and a hatchery. Adding to it slowly over the years, he re-invested the meager profits of his business, including small time gold production, into more ponds and buildings. His strategy was never to become

rich, because then he would become a target for extortion and violence. Having no money, no one would see him as a profit potential. His expansion plan is to produce seed fish for producers across the region so that everyone gets wealthy faster than him in hopes that he will be left alone. He also imports pure-bred European honey bees with the ambition of producing queens to sell to other locals as another source of alternative income and food production. This includes an artificial insemination program to produce non-africanized bees. He collaborates with Don Ivan of Rio Rayo in this endeavour.

Presently there are no other producers, no one to buy the seed fish, nor even anyone to buy the fish. This is the ultimate irony: the locals love fish, and have a proud tradition of eating fish from the river that has now likely become a significant health risk due to decades of mercury contamination by land based alluvium mining and extensive dredge mining. However when Don Alvaro went to local restaurants to sell his tilapia and other aquaculture species, no one would buy them because they didn't recognize them. Restaurants felt patrons would not buy fish with names they had never heard before. So Don Alvaro canned his fish in sauces, and sent samples to distributors in the US, Europe, China, and elsewhere. The response was bittersweet… some were very interested, but only if he could fill several shipping containers per year. Don Alvaro is stuck in the middle. No local market for lack of education and no foreign market for lack of scale. However, scaling up production would put him at an unacceptable risk.

His near-term plans are focused on his ornamental fish rearing, and trying to find other enterprising aquaculturists to raise his seed fish. He sees un-reclaimed mine pits as a potential opportunity, but does not have the technical understanding to know how to deal with the residual mercury contamination. One of his ideas is to raise the fish in nets set in the ponds, and to feed them food pellets instead of allowing them to forage. He is soon going to engage in an experiment, in collaboration with the University of Antioquia, to line an old mine pit with a geo-membrane and raise fish in the lined pond. On the far end of his property, there is one pond that he suspects is contaminated with mercury, and he plans to populate it with aquaculture fish species to see if the mercury travels up the food chain resulting in mercury concentrations in fish meat that are dangerous.

Don Alvaro needs help assessing the mercury risk associated with various different methods of fish rearing in mining pits. This could be a significant source of alternative income for non-miners at degraded sites if there were a way to prevent mercury bioaccumulation. There are many examples elsewhere which indicate that older contamination sites tend to build an organic barrier layer that reduces mercury mobility to levels that are significantly below hazard levels. Also, newer pits could be lined with fine iron oxide rich clays. The expansion of moistened clay minerals creates an impermeable barrier, and iron oxides bind to mercury and therefore immobilize it. It would be useful for USAID to analyze several orphaned mine pits of various ages to assess the concentrations, mobility, and bioaccumulation risk of mercury in these settings. The University of Antioquia and Corantioquia both have analytical equipment that could analyze samples of lake bottom sediments and water, as well as in tissues of fish raised in mercury contaminated ponds.

Corantioquia does not yet have the capability to use its newly acquired pyrolysis unit for its lumex mercury analyzer. It would be very useful for this project to employ Dr Jesus Olivero of the University of Cartagena (jesusolivero@yahoo.com) to train Corantioquia to take these measurements. He has trained my colleagues in the past, and they have gone on to do excellent work in the Madre de Dios region of Peru with researchers from Stanford. Dr Olivero could also be an important resource and collaborator, as he has published several journal articles in English

on mercury research that he has conducted. I have already contacted him and he has expressed an interest in training people and in scientific cooperation.

VI. ACADEMIC RESOURCES

Dr. Oscar Jaime Restrepo (ojrestrepo@unalmed.edu.co) is the head of the department of mining engineering at the Universidad Nacional in Medellin. He has an entire mineral processing lab at his disposal and is eager to get involved in artisanal mining remediation and research. He could be a good resource for training and for evaluating ores and mining practices.

Dr. Jesus Olivero of the University of Cartagena (jesusolivero@yahoo.com) recently made waves in Colombia for his student's paper on mercury in Colombia tuna. He has a full analytical laboratory as well as a Lumex vapour analyzer, he has trained other colleagues in the use of the Lumex, and is interested in further mercury research.

VII. WEB BASED CENTER FOR MINER TRAINING

The Alliance for Responsible Mining, the Medellin based mining advocacy organization that established the FairMined label for ethically sourced artisanal mining products, has recently been awarded funds from the Inter-American Development Bank to create a virtual training centre for artisanal miners. Their focus is mainly on formalization, fair trade certification, and training of trainers for improving artisanal mining, however there could be some fruitful synergies with the USAID project. As part of my Department of State project in Bolivia I intend to contribute some more technical resources on mercury free mining techniques. It would be very positive if USAID could contribute some resources to this effort as well: perhaps some training manuals for mercury free equipment and processes that are developed during the course of the project? I leave that up to you. Here are some contacts for the ARM-IADB initiative:
ronaldkoepke@communitymining.org , marcinpiersiak@communitymining.org .

VIII. FOLLOW UP

Scope of possible future work relating to baseline data (remote work from Canada).

Remote technical assistance for atmospheric mercury monitoring activities.

   a. 2 days to create a protocol and step by step GPS and Lumex operation manuals with photographs and screen shots. This will serve as a reminder of previous training provided 9 months ago, as a training manual for new staff, and it will aid quality control.

2. Remote quality control and data processing for data obtained in the field.
   a. 4 days (~1 hr for every hour of data collected. Data collection needs based on recommendations for data collection given in the atmospheric monitoring section of this report. ~30 hours each for Segovia, El Bagre, Caucasia.)
   b. 2 days (contingency, in case field team needs troubleshooting or support.)
3. Mapping, and statistical analysis of atmospheric mercury data, and report writing.
   a. 5 days.
4. Mercury monitoring data cataloguing and quality control. Remote guidance and optimization.
   a. 3 days

Scope of possible future work (In-country, travel to and within country not included)

1. Field verification of atmospheric mercury baseline and mass balance data collection methods (El Bagre, Caucasia, Segovia).
   a. 6 days.
2. Field verification of mercury baseline data collection methods (dredge, excavator, Segovia).
   a. 6 days.
3. Evaluation of progress in acquisition, training, and application of new technologies for increased gold recovery and mercury replacement.j
   a. 3 days reviewing equipment in process of being manufactured, verification and optimization of design.
   b. 4 days testing of gold recovery with new equipment for comparison with previous methods.
4. Development of training materials and gold extraction protocols.
   a. 5 days.