USAID
FROM THE AMERICAN PEOPLE

Programmatic Environmental Assessment Approval Sheet

Reference IEE: DCN: 2010-GEO-021
Country: GEORGIA
Project Name: IDP Durable Housing Activity

Type of document(s):
☒ **Programmatic Environmental Assessment**

Document Prepared by: Tetra Tech EM, INC.
Document Preparation Date: Nov 2011

Location(s) Covered by this document: Georgia

Environmental Media and/or Human Health Potentially Impacted (check all that applies):
☒ Air ☒ Water ☒ Land ☒ Biodiversity

Introduction:
This document records Mission clearance and Bureau Environmental Officer (BEO) approval of the Programmatic Environmental Assessment (PEA) for USAID/Caucasus's IDP Durable Housing Activity. A draft version of the PEA was vetted with the BEO.

Background:
USAID's environmental regulation (22 CFR part 216 or Reg. 216) establishes the conditions and procedures for environmental review of new projects, programs, or activities authorized by USAID. It includes a process for the review of environmental and social impacts to ensure that projects funded by USAID are environmentally sound, designed to operate in compliance with applicable regulatory requirements, and not likely to cause a significant environmental, health or safety hazard.

The Initial Environmental Examination (IEE) for the IDP Durable Housing Activity was approved by the Europe and Eurasia BEO on June 22, 2010, DCN: 2010-GEO-021. The IEE established the requirement for a PEA for the following interventions funded under IDP Durable Housing Activity: Component 2 (Infrastructure upgrades as part of the rehabilitation of buildings and hospitals for IDPs from Georgia's 1990s conflict). As per the IEE and Regulation 22 CFR part 216, a Scoping Statement for the PEA was prepared and approved on September 6, 2011.

Action:
We request your approval of the Programmatic Environmental Assessment for the IDP Durable Housing Activity.

Clearance:
Mission Director: _____ Date: 2/28/12
Stephen M. Haykin

Deputy Mission Director: _____ w/ note on additional revisions Date: 2/28/2012
Joakim J. Parker

Project COTR: _____ Date: 24 Feb 12
Brad Carr

Mission Environmental Officer: Jill Kelley A/MEO Date: 2/24/2012
Mariam Ubilava

Approval:
Bureau Environmental Officer: _____ Date: Feb 29, 2012
William Gibson

Approved: ✓ Disapproved: _____

MUNICIPAL INFRASTRUCTURE AND IDP HOUSING REHABILITATION PROJECT

PROGRAMMATIC ENVIRONMENTAL ASSESSMENT FOR IDP DURABLE HOUSING ACTIVITY

REPORT

CONTRACT: AID-EDH-I-00-08-00027-00, TASK ORDER: AID-114-TO-11-00002

26 August 2011; Revised 03 February 2012;Revised 23 March 2012;Revised 30 March 2012

This document was produced for review by the United States Agency for International Development. It was prepared by Tetra Tech for the Municipal Infrastructure and IDP Housing Rehabilitation Project, Task Order number AID-114-TO-11-00002 under the USAID Architectural and Engineering (A&E IQC).

MUNICIPAL INFRASTRUCTURE AND IDP HOUSING REHABILITATION PROJECT

PROGRAMMATIC ENVIRONMENTAL ASSESSMENT (PEA) FOR IDP DURABLE HOUSING ACTIVITY

REPORT

CONTRACT: AID-EDH-I-00-08-00027-00, TASK ORDER: AID-114-TO-11-00002

26 August 2011; Revised 03 February 2012; Revised 23 March 2012; Revised 30 March 2012

The following document was prepared by Tetra Tech EM, Inc. (http://www.tetratech.com).

DISCLAIMER

This report is made possible by the support of the American People through the United States Agency for International Development (USAID). The contents are the sole responsibility of Tetra Tech EM, Inc. and do not necessarily reflect the views of USAID or the United States Government.

March 30, 2012

Mr. Bradley Carr
Water Irrigation and Infrastructure Advisor
Office of Economic Growth
US Agency for International Development
11 George Balanchine Street
Tbilisi, 0131
Georgia

Re: Revised Programmatic Environmental Assessment (PEA) for IDP Durable Housing Activity (Report)

Dear Mr. Carr:

This report is being submitted to you in accordance with the requirements of task order no. AID-114-TO-11-00002 of contract AID-EDH-I-00-08-00027-00. It provides Tetra Tech's Programmatic Environmental Assessment (PEA) for IDP Durable Housing Activity for the Municipal Infrastructure and IDP Housing Rehabilitation Project after updating the PEA to include consideration of water supply and drainage improvements for IDP cottage settlements.

The revised PEA includes changes based on comments from the COTR dated 28 March 2012.

We look forward to your review and welcome your comments and suggestions.

Very truly yours,

Jeffrey W. Fredericks, P.E., PhD
Chief of Party
Tetra Tech, Inc.

CC: USAID (George Kokochashvili); MDF (Kartlos Gviniashvili); Tetra Tech (Firouz Rooyani, Dean White, Tom Chicca, Ilia Eloshvili, Jim Gallup, Karen Menczer)

TABLE OF CONTENTS

Contents

TABLE OF CONTENTS ..... **I**
List of Tables iv

1. SUMMARY **1**
1.1 Program Description 1
1.2 Project Context 1
1.3 Summary of 22 CFR 216 Requirements, IEE Summary, Scoping Process 2
1.4 Major Conclusions 2
1.5 Areas of Controversy and Issues to be Resolved 4

2. PURPOSE **6**
2.1 Project Description 6
2.2 Purpose and Need for the Proposed Action 7
2.3 IEE Threshold Determination 8
2.4 Host Country Context 8
2.5 Summary of Environmental Scoping Process 9
2.6 Stakeholder Engagement and Host Government Consultation 10
2.7 PEA Methodology 10

3. ALTERNATIVES INCLUDING THE PROPOSED ACTION **11**
3.1 Description of Program Alternatives 11
3.1.1 Alternative 1 – Proposed Action 11
3.1.2 Alternative 2 – Cash or Voucher Transfer Program 12
3.1.3 Alternative 3 – No Action Alternative 12
3.2 Comparison of Environmental Impacts of Program Alternatives 13
3.3 Rationale for Eliminating Program Alternatives for Further Evaluation in the PEA 17
3.4 Ranking of Alternatives with Respect to Significance of Environmental Impacts 17
3.5 Activity-Specific Alternatives for IDP Cottage Settlements 17
3.5.1 Description of Activity-Specific Alternatives 18
3.5.2 Comparison of Environmental Impacts of Activity-Specific Alternatives 18
3.5.3 Rationale for Eliminating Activity-Specific Alternatives for Further Evaluation 18

4. AFFECTED ENVIRONMENT **18**
4.1 Description of Project Beneficiaries 24
4.1.1 Population Size and Ethnicity 24
4.1.2 Gender 27
4.1.3 Age Distribution 28

4.1.4 Socioeconomic Characteristics 28
4.1.5 Public Health Status 31
4.2 Geographic and Geologic Characteristics 31
4.3 Land Use Characteristics 32
4.4 Cultural and Historic Resources 33
4.5 Environmental Baseline Information 34
4.5.1 Environmental Data 34
4.5.2 Biological Diversity 35
4.5.3 Endangered, Threatened, and Protected Species and their Habitats 35
4.5.4 Protected Areas and National Parks 36
4.5.5 Environmental Studies of Affected Area 36
4.6 Other Physical and Natural Resources 37
4.6.1 Climate 37
4.6.2 Air 37
4.6.3 Water Resources 37
4.7 Policy, Legal, Regulatory and Permitting Requirements 40
4.7.1 Relevant Policy, Legal, and Regulatory Requirements 40
4.7.2 Relevant and Applicable International Standards and Best Practices 42
4.7.3 Relevant and Applicable Permitting Requirements 43

5. ENVIRONMENTAL CONSEQUENCES 45
5.1 Environmental Impacts of the Proposed Action and Alternatives 45
5.1.1 Potable Water Quality Testing (Cottage Settlements) 47
5.1.2 Direct Effects and their Significance 47
5.1.3 Indirect Effects and their Significance 60
5.1.4 Cumulative Effects and their Significance 60
5.1.5 Area of Land Disturbance 60
5.1.6 Endangered, Threatened, or Protected Species and their Habitats 61
5.1.7 Wetland Impacts 61
5.1.8 Biodiversity Losses 61
5.1.9 Possible Conflicts between Proposed Action and Land Use Plans 62
5.1.10 Possible Conflicts between Proposed Action and Policies and Controls 62
5.1.11 Energy Requirements and Conservation Potential of Alternatives and Mitigations 62
5.1.12 Urban Quality 62
5.1.13 Historic and Cultural Resources 63
5.1.14 Design of the Built Environment including Reuse and Conservation Potential 63

6. ENVIRONMENTAL MITIGATION AND MONITORING PLANS 64
6.1 Environmental Mitigation Plans 64
6.2 Environmental Monitoring Plans 65

7. LIST OF PREPARERS 87

8. APPENDICES 89
Appendix 8.1 Photos of IDP Buildings 90
Appendix 8.2 Photos of IDP Cottage Settlements 93
Appendix 8.3 Potential Environmental Impacts for IDP Buildings 96
Appendix 8.4 Potential Environmental Impacts for IDP Cottage Settlements 102
Appendix 8.5 IDP Buildings - Environmental Site-Screening Analysis 108
Appendix 8.6 IDP Cottage Settlements - Environmental Site-Screening Analysis.. 116
Appendix 8.7 Environmental Inspection Site Visit Report for Rehabilitation of Hospitals, Clinics and Medical Service Buildings 123
Appendix 8.8 Site Visit Assessment Report for Rehabilitation of Hospitals, Clinics and Medical Service Buildings for IDP Housing 140
Appendix 8.9 Water Supply, Sanitation and Drainage Improvements by IDP Cottage Settlement 237
Appendix 8.10 Water Supply and Drainage Improvements (Cottage Settlements) 237
Appendix 8.11 Water Quality Test Results (Cottage Settlements) 123

List of Tables

Table 2-1: Local Permits Required for Cottage Settlement and Durable Housing Rehabilitation 9
Table 3-1: Comparison of Alternatives 13
Table 3-2: Comparison of Environmental Impacts of Sewage Treatment Alternatives 21
Table 4-1: IDPs residing in Imereti and Samegrelo-Zemo Svanei Region (2011) 27
Table 4-2: Distribution of gross value added by regions (at current prices, bill GEL) 29
Table 4-3: Recent Work Indicators for Georgia from UNDP Human Development Report (2010) 29
Table 4-4: Labor force and employment status for Georgia (2010) 30
Table 4-5: Health Indicators 31
Table 4-6: Structure of agricultural land by usage types (Agricultural Census, 2004) 32
Table 4-7: Land under one year crops (Agricultural Census, 2004) 32
Table 4-8: Land under perennial crops (Agricultural Census, 2004) 33
Table 4-9: Number of livestock and poultry in Imereti and Samegrelo-Zemo Svaneti (Agricultural Census 2004) 33
Table 4-10: Principle Laws and Regulations relevant to the Proposed Project 40
Table 5-1: Comparison of Water Quality Test Results with Geogian Drinking Water Standards 47
Table 5-2: Potential Significant Impacts for IDP Cottage Settlement Projects 47
Table 5-3: Potential Significant Impacts for IDP Building Rehabilitation Projects 50
Table 6-1: Environmental Mitigation and Monitoring Plan for IDP Buildings 66
Table 6-2: Environmental Mitigation and Monitoring Plan for IDP Cottage Settlements 71
Table 6-3: Environmental Mitigation and Monitoring Plan for IDP Building Rehabilitation Involving Asbestos Remediation (Asbestos-Tiled Roofing, Asbestos Corrugated Sheets, Asbestos Materials) 80
Table 6-4: Environmental Mitigation and Monitoring Plan for Chance-Finds during Rehabilitation of Hospitals, Clinics and Medical Service Buildings for IDP Housing 80

List of Figures

Figure 4-1: Map of IDP Cottage Settlements 25
Figure 4-2: Map of IDP Building Locations 26
Figure 4-3: Nominal GDP and real GDP in Georgia for 2005-2010 28
Figure 4-4: Network of Georgia's Protected Areas 36
Figure 6-1: Cottage Decision Tree for Sewage Treatment 99

ABBREVIATIONS AND ACRONYMS

BEO	USAID Europe and Eurasia Bureau Environmental Officer
CCN	Cooperating Country National
CFR	Code of Federal Regulations
CO	USAID Contracts Office
COD	Chemical Oxygen Demand
COP	Chief Of Party
DCOP	Deputy Chief Of Party
DRC	Danish Refugee Council
EA	Environmental Assessment
EC	European Commission
EIA	Environmental Impact Assessment
EMMP	Environmental Mitigation and Monitoring Plan
EPI	Economic Prosperity Initiative USAID Project
ESS	Environmental Scoping Statement
GEL	Georgian Lari
Geo	Geo Ltd
GMIP	Municipal Infrastructure And IDP Housing Rehabilitation Project (the project)
GoG	Government of Georgia
HO	Home Office
ICRC	International Committee of the Red Cross
IDP	Internally Displaced Persons
IL	Implementing Letters
Kav	Kavgiprotransi-Mg Ltd
KfW	Kreditanstalt für Wiederaufbau (German International Development Banking Agency)
LTTA	Long Term Technical Assistance
M&E	Monitoring and Evaluation
M&M	Mitigation and Monitoring
MDF	Municipal Development Fund
MEO	USAID/Georgia Mission Environmental Officer
MLHSA	Ministry of Labor Health and Social Affairs
MRA	Ministry of Refugee Affairs
MRDI	Ministry of Regional Development and Infrastructure
NEO	New Economic Opportunities (USAID Project)
NGO	Non-Government Organization
NTP	Notification to Proceed
PE	Licensed Professional Engineer
PEA	Programmatic Environmental Assessment
PMC	Project Management Committee
PMP	Performance Monitoring Plan
SDC	Swiss Agency for Development and Cooperation
SIDA	Swedish International Development Corporation Agency
SOW	Scope of Work
SS	Scoping Statement
STTA	Short Term Technical Assistance
TBD	To Be Determined
TOCOTR	USAID Task Order Cognizant Technical Officer
Tt	Tetra Tech EM Inc.
UNHCR	United Nations High Commissioner for Refugees
UNTC	United Nations Treaty Commission
USAID	United States Agency For International Development
USG	U.S. Government

WB	World Bank

1. SUMMARY

In order to stimulate rural economic development and improve livelihoods of vulnerable populations, USAID/Georgia signed an agreement with the Government of Georgia (GoG) which aims to: (1) assist over 80 local communities to prepare and implement community development, (2) upgrade the existing shelters constructed by the GoG for Internally Displaced Persons (IDPs) from the 2008 conflict with Russia, and (3) redevelop buildings for use as durable housing for IDPs from previous conflicts. As part of this agreement, USAID intends to assist the GoG to rehabilitate housing and infrastructure under the "Georgia Municipal Infrastructure and IDP Housing Rehabilitation Project" (GMIP). Component 3 of the GMIP will upgrade nearly 2,000 houses constructed by the GoG without indoor, piped water and sanitation facilities for IDPs from the August 2008 war and rehabilitate about 118 buildings which will provide renovated, safe apartment housing for IDPs.

1.1 Program Description

Georgia's periods of conflict have resulted in approximately 250,000 IDPs located throughout the country. The most recent conflict in August 2008 exposed Georgia's fragile democratic and economic condition. These issues continue to require long-term support. Failure to provide IDPs with modern and secure housing is likely to contribute to Georgia's political and economic instability. GMIP-Component 3 will implement infrastructure rehabilitation activities in collaboration with the GoG Municipal Development Fund (MDF). This Programmatic Environmental Assessment (PEA) covers two subcomponents of GMIP-Component 3: (1) Water and sanitation upgrades for IDP cottage housing for IDPs from the August 2008 war and (2) Durable housing solutions for IDPs from the 1990s conflict. The two subcomponents are briefly described below.

Subcomponent 1: Provide Water and Sanitation Upgrades for IDP Cottage Housing for IDPs from the August 2008 War.

GMIP will provide upgrades for nearly 2,000 houses constructed by the GoG following the August 2008 war. Due to the emergency situation following the war, these houses were often poorly constructed. The GoG, through GMIP, aims to improve cottage settlements by providing potable water of acceptable quality and quantity, sewage collection and treatment, and proper drainage systems. These renovations will improve living conditions in IDP cottage settlements.

Subcomponent 2: Provide Durable Housing Solutions for IDPs from the 1990s Conflict

Many IDPs from the 1990s conflict remain in collective centers with poor physical living conditions. As part of providing new housing for a portion of this population, GoG intends to rehabilitate collective centers and other buildings (e.g., hospitals and medical service buildings). The rehabilitation of these buildings is consistent with the Ministry of Refugee Affairs (MRA) interest in improving the overall living conditions of IDPs. MRA has identified 118 potential buildings for USAID rehabilitation.

1.2 Project Context

Georgia's conflicts with Russia and the global economic crisis have placed a severe strain on Georgia's national budget and its ability to finance core investments, especially in infrastructure. Many years of decline in the quality, coverage and maintenance of basic services, including water supply, sewage, local roads, solid waste services, and irrigation systems have dramatically reduced Georgia's quality of life in rural areas and constrained private sector growth. Such degradation and instances of conflict-related damage have resulted in significant constraints to the productive capacity and quality of life of thousands

of Georgians, including old and new IDPs, rural poor, and persons directly or indirectly affected by the 2008 conflict with Russia. GMIP will address these needs.

1.3 Summary of 22 CFR 216 Requirements, IEE Summary, Scoping Process

USAID's environmental regulations (22 Code of Federal Regulations 216 or Reg. 216) establish the conditions and procedures for environmental review. These procedures apply to new projects, programs or activities authorized by USAID. The Initial Environmental Examination (IEE) for GMIP was drafted and approved by the Europe and Eurasia Bureau Environmental Officer (BEO) on June 22, 2010 (DCN: 2010-GEO-021). Pursuant to Reg. 216 and the IEE's Positive Determination, a PEA is required. According to Section 216.6(d) of Reg. 216, a PEA may be appropriate "in order to assess the environmental effects of a number of individual actions and their cumulative environmental impact in a given country or geographic area, or the environmental impacts that are generic or common to a class of agency actions or other activities that are not country specific." The PEA process ensures that environmental consequences and their significance are known and clearly identified prior to the approval of the final design and start of construction [216.3 (a) (4)].

According to the GMIP IEE, activities involving establishment of homeowners associations and housing maintenance were determined to be Categorical Exclusions. Infrastructure upgrades for new IDP houses and infrastructure upgrades as part of the rehabilitation of buildings for IDPs were designated with a Positive Determination because of their potential for significant adverse environmental effects.

Through scoping meetings with stakeholders and the GoG, document review, and field visits, the scoping process identified, reviewed, and prioritized environmental issues. Public stakeholder scoping meetings were conducted at the Teliani IDP settlement in Kaspi municipality on June 23, 2011 and at Kutaisi City on June 29, 2011. The purpose of the meetings was to provide information and get the opinions of community members about the project. A total of 65 people attended both meetings including representatives of Teliani IDP, Kutaisi IDP, local governments, Ministry of Refugees, Ministry of IDPs and World Vision. Part of the Kutaisi IDP stakeholder meeting was aired by the local Imereti TV broadcasting channel RIONI. These meetings informed the local community about the goal of the project, ensured their involvement at the early planning stage, and identified community concerns regarding potential social and environmental issues related to the project.

1.4 Major Conclusions

The scoping process identified potentially significant social and environmental impacts to be analyzed in the PEA. With additional information gathered during the PEA process, the PEA Team made a few revisions to the significant impacts; the following are the significant impacts that are analyzed in this GMIP-Component 3 PEA:

- Waste generation from construction/rehabilitation and demobilization can contaminate soil and water (construction waste, waste oil/lubricants, fuel spills).
- Poorly planned and maintained potable water systems can impact IDP public health (cottage settlements)
- Poorly planned and maintained sewage disposal and treatment systems can contaminate soil and water and affect human health (cottage settlements).
- Poorly planned and maintained drainage systems can contaminate soil and water and cause flooding affecting public health.
- Use of environmentally unsound sanitation facilities or complete lack of facilities for construction workers can contaminate soil and water.

- Construction labor issues could derail support for the project. Alcohol and socially destructive substances introduced by construction crews could cause community impacts.
- Construction activities could temporarily affect the quality of life of IDPs (cottage settlements).
- Lack of a clear process and understanding of ownership could derail project support and affect maintenance of the upgraded infrastructure.
- Worker safety may be compromised if safeguards are not in place.
- Public safety may be compromised if safeguards are not in place.
- Air pollution due to dust and emissions during construction phase could affect human health.
- Poorly planned and implemented temporary relocation could derail project support (IDP buildings).
- Hazardous waste, mainly from removal of material containing asbestos, could affect human health and the environment.
- Hospital and medical wastes, including chance-finds of biohazards/infectious agents, asbestos, mold, silver, lead, mercury, PCBs and radioactive wastes, could affect human health and the environment.

The PEA Team developed mitigation measures (including best practices) to minimize the potential social and environmental impacts listed above. The mitigation measures are practical and feasible, and they are expected to adequately minimize potential impacts. The PEA Team also developed Environmental Mitigation and Monitoring Plans (EMMPs), which are provided in Chapter 6 of the PEA. EMMPs cover rehabilitation/construction and operation/maintenance and include the identified environmental impacts, individual mitigation measures, monitoring indicators, monitoring/reporting frequency and responsible party for oversight of EMMP implementation. Four sets of EMMPs were developed:

- Table 6.1 is the EMMP for IDP Buildings (including hospitals/clinics) provides mitigation measures addressing the potential significant environmental impacts from building rehabilitation and operation.
- Table 6.2 is the EMMP for IDP Cottage Settlements includes mitigation measures addressing impacts associated with the water and sanitation improvements at IDP cottage settlements.
- Table 6.3 is the EMMP for IDP Building Rehabilitation Involving Asbestos Remediation includes asbestos mitigations for asbestos-tiled roofing, asbestos corrugated sheets and other asbestos materials. Mitigations are provided for environmental impacts involving preparation for asbestos removal, asbestos contamination during removal, disposal, socioeconomic impacts and public health and safety impacts.
- Table 6.4 is the EMMP for Chance-Finds of Biohazards during Rehabilitation of Hospitals, Clinics and Medical Service Buildings. All mitigations in the EMMP for building rehabilitation (Table 6.1) also apply to hospitals/clinics and if asbestos is present, the EMMP for asbestos (Table 6.3) applies. Table 6.4 includes mitigations for biohazards, infectious agents, asbestos, mold, silver, lead, mercury, PCBs and radioactive wastes.

Monitoring indicators are used to determine the success of mitigation measures (e.g., fecal coliforms, nitrates and COD used in Table 6.2 to determine success of potable water mitigations for IDP cottages). Most mitigation and monitoring measures will be included in the GMIP implementation contracts issued by the GoG MDF. MDF and GMIP will both monitor implementation of the mitigation measures to ensure they are effective for reducing or eliminating the environmental impacts.

The PEA Team also identified the need to address on-site sewage treatment methods at cottage settlements through an activity-level review. The Team identified activity-specific alternatives, as follows:

- Septic Tank and Infiltration Drain Field Treatment
- Oxidation Pond Wastewater Treatment
- Aerated Lagoon Treatment
- Latrines
- Activated Sludge Treatment
- No Action

Figure 6.1 provide a Decision Tree for selection of the best sewage treatment method at each IDP cottage settlement. A set of criteria including the types of soil and soil percolation rates, level of the groundwater tables, amounts of land available and acceptability to IDPs guides the selection of sewage treatment method. Cottage settlements provided showers and flush toilets will receive appropriate sewage treatment such as septic tank and infiltration drain field treatment.

1.5 Areas of Controversy and Issues to be Resolved

All of the potentially significant environmental impacts have been identified along with mitigations to reduce or eliminate the impacts. Monitoring measures also are identified to ensure the effectiveness or adjustment, as needed, of mitigation measures.

Based on the identification of impacts and the environmental analysis in the PEA, the following issues remain to be resolved:

- An IDP Privatization Plan may need to be developed and communicated to IDPs. Lack of a clear process and understanding of ownership could derail project support and affect maintenance of the upgraded infrastructure. The need to address ownership is included as a mitigation measure.
- An IDP Resettlement Plan may need to be developed and communicated to IDPs. Poorly planned and implemented temporary relocation could derail project support (IDP building component only). The need to develop a Resettlement Plan that includes regular and inclusive communication is needed that adequately considers places of employment and location of schools. This is included as a mitigation measure for building rehabilitation.
- An IDP Payment Plan may need to be developed and implemented. The plan should determine how IDPs will pay for O&M services. Sewage treatment may need operator support, maintenance, and chemicals. Water supply may also need a sustainable plan to pay for O&M services.
- Asbestos removal needs to be addressed. Mitigation measures include implementation of best practices that rely in part on personal protective equipment. Equipment must be onsite, maintained, and used. Workers need to be trained to use and maintain equipment, and the location of asbestos disposal must be secure and environmentally sound. GMIP, in coordination with MDF, will need to adequately plan for and implement environmentally sound asbestos removal and disposal.
- Hospital and medical wastes need to be addressed. Mitigations for hospitals, clinics and medical service buildings rehabilitated for IDP housing include measures for building rehabilitation (Table 6.1 EMMP) and measures for chance-finds of medical biohazards during hospital/clinic rehabilitation (Table 6.4 EMMP). If asbestos is present, the asbestos remediation EMMP applies (Table 6.3). Mitigations include implementation of best practices that identify biohazards and pretreatment requirements and provide for cleanup, transport and disposal of medical wastes. GMIP, in coordination with MDF, will need to adequately plan for and implement these

mitigations. Also, hospitals, like all housing solutions, are options and IDPs will not be forced to relocate into a hospital or medical service building. IDPs can select other housing options per MRA's operating guidelines. While MRA will make the final determination of buildings for rehabilitation, GMIP is in consultation with MRA in selection of housing options to help insure that a sufficient number of potential residents warrant rehabilitating each building.

2. PURPOSE

2.1 Project Description

Georgia's periods of conflict have resulted in approximately 250,000 IDPs located throughout the country. The IDPs affected during the 1990s conflict were placed in unsuitable buildings, while the IDPs who were displaced following the August 2008 war were housed in new but poorly constructed settlements (cottages) with inadequate infrastructure (e.g., water and sewage systems). Failure to provide IDPs with modern and secure housing can contribute to Georgia's political and economic instability.

The Georgia Municipal Infrastructure and IDP Housing Rehabilitation Project (GMIP) will implement infrastructure rehabilitation activities in collaboration with the GoG Municipal Development Fund (MDF). This PEA covers Component 3 of the GMIP, which includes two subcomponents: (1) provide water and sanitation upgrades for cottage settlements for IDPs from the August 2008 war; and (2) provide durable housing solutions for IDPs from the 1990s conflict. The rehabilitation of these buildings is consistent with the Ministry of Refugee Affairs (MRA) interest in improving the overall living conditions of IDPs. The two subcomponents of GMIP-Component 3 are described below.

Subcomponent 1: Provide Water and Sanitation Upgrades for Cottage Housing for IDPs from the August 2008 War.

GMIP proposes to upgrade nearly 2,000 houses located in 10 priority IDP settlements identified by the MDF for USAID funding support. The houses were constructed by the GoG following the August 2008 war, and due to the emergency situation at the time, they were not fully equipped. The GoG, through GMIP, aims to improve cottage settlements by providing potable water of acceptable quality and quantity, sewage collection and treatment, and proper drainage systems. These renovations will improve living conditions in the IDP cottage settlements.

GMIP will provide assistance to perform necessary technical and financial feasibility studies. As part of the technical analyses (engineering design and feasibility study prior to project implementation), the program will consider drilling a new water well, evaluate the locations of proposed pipelines and water and sewage treatment facilities as a means of avoiding critical engineering flaws that might affect the integrity and performance of the infrastructure and the technical and environmental soundness of the project.

GMIP will support potable water system improvements in 8 cottage settlements and inside cottage water connections in 10 settlements. Acceptable water quality and quantity will be provided and a new water well will be drilled in Akhasopeli settlement to increase its quantity of water available for its cottages. New water pumping capacity and expanded disinfection units using ultraviolet lamps will be added so that potable water can be piped through a new distribution network, delivering water to each cottage for inside water connections. A new building with a shower and flush toilet will also be constructed outside each cottage.

GMIP will support sewage treatment in seven cottage settlements. All cottages provided with showers and toilets will be provided with an appropriate sewage treatment system. For example, septic tanks and separate grey water disposal systems may be constructed at each cottage; septic tank overflows will be collected in sewage networks where they will be piped to a central infiltration drainfield for final sewage treatment. Inside water connections will be provided in two settlements where latrines are used and no central sewage treatment is needed. Water connections will also be provided to Metekhi

settlement where a central septic system already exists. In addition, 120 m of damaged sewage pipe will be replaced in Karaleti settlement where sewage is discharged into the Gori municipal sewerage system.

GMIP will support drainage improvements in six cottage settlements. Existing drainage collectors and roadside drainage ditches will be cleaned in all 6 settlements. Steel drainage pipelines will be constructed in all settlements to reduce the threat of flooding. At one settlement (Teliani), sub-surface drainage pipe will be constructed; a bridge over a new drainage collector channel will be constructed in another settlement (Karaleti).

Subcomponent 2: Provide Durable Housing Solutions for IDPs from the 1990s Conflict

Many IDPs from the 1990s conflict remain in collective centers with poor physical living conditions. The GoG intends to rehabilitate these collective centers and other buildings (e.g., hospitals and medical service buildings) and convert them into durable housing units in accordance with MRA's "Standards for Rehabilitation, Conversion or Construction Works for Durable Housing for IDPs." Availability of durable housing has been a serious problem for IDPs occupying the buildings. In many cases IDPs currently occupy buildings not typically designed for living purposes (e.g., designed as kindergartens and schools).

The MRA identified 118 potential buildings for USAID funding support; GMIP will provide support to rehabilitate a subset of these. GMIP will convert these buildings to durable housing space to enable IDPs to safely remain in their current location.

GMIP, in its support for the IDP Durable Housing Program sub-component, will prepare a technical feasibility study for the rehabilitation of IDP buildings. The feasibility study document includes: a) an assessment of the structural stability; b) an assessment of the internal and external gas, electricity, sewage, and water systems; and c) an examination of internal building conditions such as water damage. The feasibility study provides technical and economic assessment of proposed buildings and evaluates the feasibility of building rehabilitation works. Based on feasibility study findings, and in collaboration with the GoG, GMIP will identify buildings for rehabilitation (buildings with weak structural integrity will be excluded from funding support).

Building rehabilitation activities involve bear stripping of the facility and replacement of the old building roof, placement of insulation, inside walls, façade plaster, and floor covers. Old electrical systems will be replaced with new systems and gas piping will be installed in all buildings. Existing sewage and water pipelines will be repaired and connected to the central (municipal) system. For hospitals and medical service buildings where infectious diseases were treated, UV light or other disinfectant will be used to provide thorough cleaning. No new water or sewage treatment will be provided. Energy efficient technologies (e.g. EE light bulbs, high-efficiency heating and cooling equipment) will be installed during rehabilitation of the building. The housing design will ensure accessibility by disabled people.

The living space (not including WCs) for a one-room flat ranges from 25-35m^2; a two room flat ranges from 40-45m^2. Apartments currently occupied will be returned to the IDPs now living there. Apartments not currently occupied will be offered to IDP families and individuals regardless of their ethnic identity or economic background or whether they were displaced during the August 2008 war or the 1990s conflict.

2.2 Purpose and Need for the Proposed Action

Georgia's August 2008 conflict with Russia and the global economic downturn pose serious challenges to Georgia's economic stability. This in turn puts pressure on Georgia's political stability. The conflict,

crisis, and subsequent slowdown in economic growth and foreign direct investment have placed a severe strain on Georgia's national budget and its ability to finance core investments in critical regional development initiatives. Many years of decline in the quality, coverage, and maintenance of basic services, including water supply, sewage, local roads, solid waste services, and irrigation systems have dramatically reduced Georgia's quality of life and constrained private sector growth. Such degradation and instances of conflict-related damage have resulted in significant constraints to the productive capacity and quality of life of thousands of Georgians, including old and new IDPs, the rural poor, and persons directly or indirectly affected by the 2008 conflict with Russia.

GMIP aims to address these needs. The major purpose of the GMIP is to assist the GoG in their efforts to develop or repair critical infrastructure; Component 3 will improve and repair housing infrastructure.

The housing problem is one facet of a larger issue facing Georgia. By addressing the housing situation, GMIP-Component 3 is indirectly addressing the limited integration of IDPs into Georgian society, and thereby will facilitate IDP transition to productive contributors to society. Without this support, the quality of life for the IDPs will continue to deteriorate and could lead to decreased stability of the country.

2.3 IEE Threshold Determination

The Europe & Eurasia Bureau Environmental Officer (BEO) approved the Initial Environmental Examination (IEE) for GMIP- Component 3 on June 22, 2010. GMIP-Component 3, Subcomponents 3 and 4: *Contribute to overall sustainability of the IDP housing*; and *Provide rehabilitation infrastructure oversight and capacity building*, were determined to be Categorical Exclusions. The IEE recommended a Positive Determination for Subcomponents 1 and 2. These subcomponents were determined to have the potential for significant adverse environmental effects. The IEE's Positive Determination requires preparation of a PEA to ensure environmental consequences and their significance are known and clearly identified prior to the approval of the final design and start of construction [22 CFR 216.6]. This PEA is being prepared to satisfy the requirements of the IEE.

2.4 Host Country Context

Section 4.7 discusses relevant host country environmental legislation and permitting requirements. The projects covered by this PEA, rehabilitation of IDP cottage settlements and buildings, do not require an Environmental Impact Permit (EIP) or State Ecological Examination under Georgian legislation. Local permits are required, as shown in the table below:

Table 2-1: Local Permits Required for Cottage Settlement and Durable Housing Rehabilitation

Permit Type	Cottages or Durable Housing
Building/Construction	Both
Source Material Extraction	Both
Waste Disposal	Both
Wastewater Discharge	Cottages
Air	Both
Water Use	Cottages
Historical or Cultural Preservation	Unlikely, but possibly for cottages
Wetlands or Water bodies	Unlikely
Threatened or Endangered Species	Unlikely
Other	Water law and riverbank protection may be applicable

2.5 Summary of Environmental Scoping Process

The Scoping Team consisted of LTD GEO and Tetra Tech. GEO activities were led by Mariam Bakhtadze, Georgian environmental specialist experienced with scoping reports, and the Tetra Tech team was led by James Gallup, senior environmental specialist. To carry out the scoping process, the team identified, reviewed, and prioritized environmental issues. This was accomplished through the following three tasks:

- Identifying and reviewing existing environmental information and studies related to GMIP-Component 3;
- Carrying out site visit investigations to ascertain any additional environmental issues; and
- Obtaining stakeholder input in organized meetings to ensure that significant environmental and social issues for inclusion in the PEA were identified.

The Scoping Team held public stakeholder scoping meetings at the Teliani IDP settlement in Kaspi municipality on June 23, 2011 and at Kutaisi City on June 29, 2011. The purpose of the meetings was to provide information about the project and to get feedback from the local people about project impacts. The Scoping Team identified these two locations for scoping meetings as representative of the IDP population and concerns in general. (Additional stakeholder consultations have been and will continue to be held in all proposed project locations; at these meetings, stakeholders will continue to have the opportunity to comment on social and environmental concerns.)

A total of 65 people attended both meetings; participants included representatives of Teliani IDPs, Kutaisi IDPs, local governments, Ministry of Refugee Affairs, Ministry of IDPs, and the international NGO, World Vision. Part of the Kutaisi IDP stakeholder meeting was aired by the local Imereti TV broadcasting channel RIONI.

The design of the drainage improvements was developed for the World Bank by Holinger International Consultants. Project activities were agreed to with the IDPs in each cottage settlement. IDPs agreed to clean existing drainage collectors and roadside drainage ditches in each settlement. MDF, MRA and local authorities plan to conduct final project presentations to each settlement community before construction commences.

The Scoping Statement (submitted to the BEO for approval in August 2011) discusses the comments received during the scoping process. As the Scoping Statement documents, no environmental concerns

were brought up during the scoping meetings. Most concerns were related to quality and type of infrastructure to be provided and opportunities for local employment on the construction teams.

The Scoping Team visited representative project sites and coordinated with other GMIP staff who had visited and documented conditions at all sites. Through these site visits, the Team identified potential significant environmental and social issues for consideration in the PEA, and eliminated issues considered not to be significant. The Scoping Team also identified alternatives for consideration in the PEA.

2.6 Stakeholder Engagement and Host Government Consultation

The GMIP was designed in close coordination with the GoG. Government was, and continues to be involved in identifying the target cottage settlements and buildings that GMIP will rehabilitate. GMIP's local partner is the GoG's MDF; the GMIP is in line with MRA's objectives; and housing improvements for both sub-components conform to MRA standards for construction and rehabilitation.

As part of feasibility studies, GMIP staff have visited all project sites, and have met with stakeholders. GMIP has collaborated with stakeholders as part of the design process to ensure the design is socially and culturally acceptable. GMIP will continue to hold regular consultations through design and construction activities and up to hand over to the GoG. In particular, where occupants will need to be temporarily resettled during construction (Sub-component 2, durable housing), GMIP will meet with occupants, early on in the project, and will keep them informed of plans and progress.

2.7 PEA Methodology

This PEA was conducted by a team of local and international specialists led by Dr. Gallup, who also took part in the scoping exercise. To prepare this PEA, Dr. Gallup participated in meetings with stakeholders and visiting proposed project sites in Georgia. Ms. Menczer, Environmental Specialist (international) spent two weeks in-country assisting the team in the development of the PEA. The in-country experts, especially Mamuka Gvilava, provided input on the local affected environment. Biographical sketches of PEA Team members are included in chapter 7.

Methodology for analyzing project alternatives is presented in Section 3, and methodology for identifying potential significant impacts and determining direct effects and their significance is presented in Section 5.

3. ALTERNATIVES INCLUDING THE PROPOSED ACTION

This chapter and subsequent ones use a logic framework that begins with a discussion of the "Program Alternatives" (Section 3.1), followed by a comparison of the alternatives based on potential significant environmental impacts (Section 3.2) and a ranking of the alternatives (Section 3.4). After the ranking of program alternatives, the PEA discusses "Activity-Specific Alternatives" for the on-site sewage treatment systems at cottage settlements (Section 3.5). No program alternatives were eliminated from the study (Section 3.3). The organization of Chapter 3, as subsequent chapters do as well, incorporates a few changes to the Bureau's PEA template so that it more easily conforms to an assessment of GMIP-Component 3 activities.

The PEA Team used the program-level alternatives developed by the Scoping Team; no additional feasible program-level alternatives were identified during the PEA preparation process. However, while the Scoping Team did not identify activity-level alternatives, during the PEA preparation process, the PEA Team noted that various sewage treatment options were available, each with a range of potential impacts and benefits. Therefore, the PEA Team identified Activity-Specific Alternatives for on-site sewage treatment; these are described and compared in this chapter.

The program alternatives considered in this chapter are: the Proposed Action (Alternative 1); Cash or Voucher Transfer Program (Alternative 2); and No Action (Alternative 3). These program alternatives apply to both IDP cottage settlements and IDP building rehabilitation subcomponents.

The six Activity-Specific Alternatives considered in this PEA for on-site sewage treatment methods at cottage settlements are:

- Septic Tank and Infiltration Drain Field Treatment (Alternative 1)
- Oxidation Pond Wastewater Treatment (Alternative 2)
- Aerated Lagoon Treatment (Alternative 3)
- Latrines (Alternative 4)
- Activated Sludge Treatment (Alternative 5)
- No Action (Alternative 6)

No activity- or site-specific alternatives were developed for the building rehabilitation subcomponent.

3.1 Description of Program Alternatives

This section describes the program-level alternative actions that meet the project's purpose and need to improve the living conditions of IDPs by providing cottage settlement sewage and water upgrades and by rehabilitating durable housing solutions for IDPs. Alternatives 1 and 2 are considered feasible and able to meet the project's purpose and need. The "No Action" alternative is included to help evaluate the comparative merits of the alternatives.

3.1.1 Alternative 1 – Proposed Action

a) Provide Water and Sanitation Upgrades for IDP Cottage Housing

Under this subcomponent, based on findings of feasibility studies, GMIP will provide upgrades for nearly 2,000 cottage houses constructed by the GoG following the August 2008 war. GMIP will provide the technical and financial assistance to design and install potable water systems, improve sewage collection and treatment and install drainage systems. Specific actions to be undertaken as a part of this activity

include water supply improvements, installation of indoor plumbing and on-site sewage treatment, and drainage improvements. See Chapter 2 for more details on this subcomponent.

b) Provide Durable Housing Solutions for IDPs from the 1990s Conflict

GMIP will prepare technical feasibility studies and based on these, will support the rehabilitation of IDP buildings. Building rehabilitation activities involve demolition and replacing insulation, walls, ceiling, and flooring, plastering, and replacing old electrical systems and gas piping. Energy efficient technologies will be installed during rehabilitation of the buildings. Each flat will be provided with adequate heating, electricity, water and sewage collection systems. The water and sewage pipelines will be connected to the central (municipal) system. More details on this subcomponent are provided in Chapter 2.

3.1.2 Alternative 2 – Cash or Voucher Transfer Program

This alternative would provide cash or voucher transfers to IDPs, which would provide them with a choice in the selection of a housing solution. This program would involve a pre-set amount for direct payment or voucher, and the IDPs would be required to submit invoices to show the cash or vouchers were used for the purposes intended (infrastructure upgrades).

For cottage settlements, shower, sink water, and individual or community sewage treatment systems would be obtained using this voucher or cash system.

For IDP durable housing, renovations may involve simple cosmetic rehabilitation such as new flooring and walls or more complex renovation involving water and sewer piping and placement of insulation.

Under this alternative, IDPs would choose their own contractors, oversight of the work would be minimal, and contractors would not be held to the strict standards that GMIP is held to. This alternative would fulfill the project purpose, and IDPs may feel more "ownership" of the housing units since they will have greater responsibility for rehabilitation decisions. This may be a benefit in the long-term since they would also be expected to take greater responsibility for maintenance.

3.1.3 Alternative 3 – No Action Alternative

The No Action Alternative means that USAID will not support the project and therefore, it would be unlikely that the GoG will provide housing upgrades for IDPs. This alternative provides a benchmark against which the action alternatives will be evaluated.

Under Alternative 3, IDPs would continue to live either in rural settlements with inadequate sanitation facilities or in buildings with poor and/or unsafe living conditions. IDPs may undertake improvements on their own, or they may enlist contractors that are not reputable to rehabilitate the structures. Both of these possibilities would likely result in poor construction practices since there will be little or no oversight and construction will be haphazard, not held to the high standards that are required under the current program. The unsanitary conditions would continue to impact the environment with sewage and if poor construction practices are used, asbestos removal could result in significant impacts to human health of workers and of IDPs. For IDPs occupying structurally unsafe and/or unsanitary facilities, risk to public safety associated with building collapse and/or transmission of disease vectors would gradually increase. Some IDPs may move to alternative locations, but this is unlikely, and if it occurs, only a small percent are likely to have the resources to move.

3.2 Comparison of Environmental Impacts of Program Alternatives

As required by 22 CFR 216.6(c)(3), Table 3.1 shows, in comparative form, impacts of the proposed GMIP and its program-level alternatives. As stated in USAID's Environmental Procedures, this section is meant to sharpen the issues, illustrate the comparative merits of each alternative, and provide a clear basis for choice among the options. Section 5, Environmental Consequences, provides the analytic basis of the alternatives comparison. Following this programmatic level discussion, a comparison of alternatives for sewage treatment is provided (activity-level alternatives).

Potential environmental issues (Table 3.1, column 1) are from the Scoping Statement, as revised by the PEA Team. Chapter 5 discusses the revisions the PEA Team made to the significant environmental issues identified in the Scoping Report. In Table 3.1, the two sub-components and their potential environmental issues are considered as one alternative, i.e., the "Proposed Action" alternative.

Table 3-1: Comparison of Alternatives

Notes: (+2) highly positive effect/beneficial; (+1) positive/beneficial; (-2) significant negative effect/highly detrimental; (-1) negative effect/detrimental; (0) remains the same (i.e., no effect or same rate of change versus gets progressively worse or better)

Potential environmental issues (identified in the Scoping Statement + added by PEA Team)	**Alternative 1: GMIP Component 3, Subcomponents 1 & 2 (proposed action)**		**Alternative 2: Cash/Voucher Transfer**		**Alternative 3: No Action**
	Construction	Operation	Construction	Operation	
Geology, Soils, & Land Use					
• Accidental spills or poor disposal practices contaminate soils	-1	0	-2	0	0
• Poorly planned and maintained sewage systems contaminate soil (cottages)	0	+2	0	+1	0
Water resources					
• Accidental spills or poor disposal practices contaminate water	-1	0	-2	0	0
• Lack of proper sanitary facilities for workers contaminates water	-1	0	-2	0	0
• Poorly planned and maintained sewage systems contaminate water (cottages)	0	+2	0	+1	0
Socioeconomic Issues					
• Introduction of short-term labor	-2	0	-1	0	0
• Disturbance of IDPs due to construction activities (cottages)	-1	0	-1	0	0

Potential environmental issues (identified in the Scoping Statement + added by PEA Team)	Alternative 1: GMIP Component 3, Subcomponents 1 & 2 (proposed action)		Alternative 2: Cash/Voucher Transfer		Alternative 3: No Action
	Construction	Operation	Construction	Operation	
• Employment opportunities during construction	+1	0	+1	0	0
• Improvement of livelihoods	+1	+2	+1	+1	0
• Ownership issues/ownership transfer	-2	-2	-2	-2	0
• Relocation issues (buildings)	-2	0	-1	0	0
Public Health Issues					
• Potential for worker accidents during construction	-1	0	-2	0	0
• Potential for accidents to IDPs and the public during construction	-1	0	-2	0	0
• Improper handling of hazardous wastes [asbestos] (buildings)	-1	0	-2	0	-2 asbestos-containing infrastructure will disintegrate, and eventually must be dealt with
• Improper cleanup practices and removal and disposal methods for hospital/medical wastes [biohazards, infectious agents, asbestos, mold, silver, lead, mercury, PCBs, radioactive waste] (buildings)	-1	0	-2	0	-2 hospital and medical waste will eventually need to be dealt with
• Human health effects due to poor drinking water quality/quantity (cottages)	0	+2	0	+1	0
• Human health effects due to poorly planned and maintained sewage treatment (cottages)	0	+2	0	+1	0
• Human health effects due to flooding caused	0	+2	0	+1	0

Potential environmental issues (identified in the Scoping Statement + added by PEA Team)	Alternative 1: GMIP Component 3, Subcomponents 1 & 2 (proposed action)		Alternative 2: Cash/Voucher Transfer		Alternative 3: No Action
	Construction	Operation	Construction	Operation	
by poor drainage (cottages)					
Air Quality					
• Generation of dust and emissions	-1	0	-2	0	0
Waste Generation					
• Disposal of debris and construction wastes	-1	0	-2	0	0
• Sanitation facilities at construction sites produce waste, contaminate site	-1	0	-2	0	0
• Hazardous waste (buildings)	-1	0	-2	0	-2
• Hospital/medical wastes (buildings)	-1	0	-2	0	-2
• Contamination from demolition	-1	0	-2	0	0
• Excess soil from excavation, excess water from de-watering, potential for disturbing contaminated soil	-1	0	-2	0	0
Lack of Maintenance Planning (added by PEA Team)	0	-2	0	-1	0

Construction Phase Concerns

The assumptions in the analysis in Table 3.1 are that: (1) the proposed action (Alternative 1) will have more oversight (GMIP oversight of all aspects from design to handover) and will require compliance with MRA standards, whereas rehabilitation under Alternative 2 will not be held to high standards, and it will be impossible to require mitigation; and (2) Alternative 1 is ranked above without mitigation.

As shown in Table 3.1, concerns are greatest during the construction/rehabilitation phase of the alternatives (ranked -1 and -2). Alternative 1's construction phase concerns (i.e., spills, introduction of short-term labor, improper sanitation facilities for workers, disturbances due to construction, etc.) are shown as less detrimental than Alternative 2 construction phase concerns. This is because under Alternative 1, GMIP and MDF will provide technical and administrative oversight of the construction phase.

For introduction of short-term labor, Alternative 2 ranks less detrimental than Alternative 1 because under Alternative 2, IDPs will have greater choice of construction contractor/laborers, and may skew jobs to IDPs, even jobs that require skilled labor for which IDPs may not be trained.

Ownership issues are the same for Alternatives 1 and 2. Without clear ownership/title to the cottages and buildings, IDPs are at risk of losing their houses and investments and operation and maintenance of common property such as building exteriors and water/sanitation services might be impossible to implement.

Relocation from buildings (durable housing subcomponent only) is potentially more detrimental under Alternative 1. This is because IDPs may only decide to make cosmetic changes, and no relocation would be required under Alternative 2, or if IDPs decide on structural rehabilitation which necessitates temporary relocation, it will be an IDP decision with no outside influence. Relocation is a significant potential adverse effect of Alternative 1 that will require mitigation; this is described further in Chapter 5 and in the EMMPs.

Alternative 1 construction phase concerns can be mitigated with best engineering practices and other environmentally sound, practicable mitigation measures. Whereas there may be no recourse for mitigation of construction phase impacts under Alternative 2. For example, hospital and medical wastes including biohazards and building cleanup wastes, will be managed under strict EMMP requirements (Chapter 6 mitigation measures) under Alternative 1 but not under Alternative 2.

Under Alternative 3, most of the potential environmental and social concerns remain unchanged from the current situation or continue to deteriorate at the same rate as they currently are. However, improper handling of hazardous wastes, in particular, asbestos, is shown in Alternative 3 as highly detrimental because if infrastructure is left in a state of disrepair, asbestos will eventually be exposed, will need to be removed, and this will significantly increase health concerns (as opposed to asbestos that can be left in place). In addition, although under Alternative 1, asbestos will be removed, there will be strict requirements (Chapter 5, mitigation measures) in place for handling the material.

Operation Phase Concerns

Potential significant adverse effects during the operation phase under Alternative 1 are related to ownership and maintenance. In particular for the cottage settlements, maintenance demands will increase. Water and sewage treatment plants need to be maintained and drainage systems need to be cleaned or the lasting benefits expected from Alternative 1 will not materialize. Chapters 5 and 6 further discuss maintenance issues and mitigations for maintenance. Ownership issues for cottages and IDP buildings also need to be addressed.

For Alternative 2, maintenance concerns during the operation phase are less significant because under Alternative 2, it is unlikely that high quality sewage treatment will be provided. While the sewage treatment system will require maintenance, the benefits to the environment offset the need for maintenance. In addition, maintenance under Alternative 2 is less a concern than under Alternative 1 because the PEA Team assumes that if the IDPs decide how to spend the voucher/cash transfer, they may be more likely to maintain the infrastructure.

For the No Action Alternative, drinking water quality concerns remain unchanged (i.e., IDPs will continue to obtain potable water as they currently are doing), and for Alternative 2, drinking water concerns are greater than for Alternative 1 because, as mentioned above, Alternative 2 is not held to the stringent controls that Alternative 1 is. However, for Alternative 1, operation phase potable water quality concern would need to be addressed in mitigation (See Section 5).

3.3 Rationale for Eliminating Program Alternatives for Further Evaluation in the PEA

The PEA Team did not add or eliminate any program alternatives to this assessment. The two alternatives to the proposed program, Cash/Voucher Transfer Program and No Action, are included, along with the Proposed Action, for further evaluation in the PEA. All program alternatives identified by the Scoping Team are included in the PEA.

3.4 Ranking of Alternatives with Respect to Significance of Environmental Impacts

The No Action Alternative (#3) has few potential adverse impacts (however, the current poor situation for IDPs will remain poor). Alternative 3 has no social or environmental benefits, and it fails to meet the project purpose and need. The adverse effects of Alternative 1 are mainly associated with construction activities and are short-term impacts. Social and environmental issues of Alternative 2 are similar to Alternative 1 but are more potentially detrimental because of the limited oversight and because mitigation measures will not be incorporated into construction and operation in Alternative 2.

As Table 3.1 shows, potential adverse effects of Alternatives 1 and 2 are mainly during the construction phase. Mitigation for construction phase impacts, including relocation, is possible only for Alternative 1 construction impacts. Maintenance issues under Alternative 1 are a greater concern due to the sewage treatment technology and because IDPs will not have control over how the infrastructure is rehabilitated.

Chapter 5 provides the analytical basis for the comparison of impacts, and thereby will develop specific mitigation measures to minimize concerns (in particular, those concerns ranked -1 and -2 in Table 3.1). Alternative 2 has the potential to produce the most significant adverse impacts; Alternative 3 will produce the next most significant; Alternative 1 as designed will produce the next level of significant impacts; and Alternative 1 with mitigation (developed based on specific impacts identified in Chapter 5) can produce the most beneficial and the fewest adverse impacts.

3.5 Activity-Specific Alternatives for IDP Cottage Settlements

Because of the range of potential environmental and social impacts that may result from various sewage treatment measures, the PEA Team determined that sewage treatment at the cottage settlements required more detailed treatment in the PEA. The PEA Team therefore identified six activity-specific alternatives to evaluate possible sewage treatment methods for IDP cottage settlements. (The PEA Team did not identify any activity-specific alternatives for the IDP building rehabilitation subcomponent.) This section evaluates and compares the activity-specific alternatives and provides the rationale used to eliminate alternatives that are not included for further evaluation in the PEA. The following are the sewage treatment alternatives under consideration:

- Septic Tank and Infiltration Drain Field Treatment (Alternative 1);
- Oxidation Ponds Wastewater Treatment (Alternative 2);
- Aerated Lagoon Treatment (Alternative 3);
- Latrines (Alternative 4);
- Activated Sludge Treatment (Alternative 5); and
- No Action (Alternative 6).

3.5.1 Description of Activity-Specific Alternatives

This section describes the alternative actions that meet the project's purpose and need to provide IDP cottage settlements with sustainable and effective sewage treatment.

Alternative 1 – Septic Tank and Infiltration Drain Field Treatment

This treatment system involves a septic tank at each cottage and an infiltration drain field in each settlement to disperse the overflow from the septic tank, reducing the risk of overloading any one place in the drain field. The septic tank provides primary treatment of the sewage, removing most of the settleable solids, greases, and floatable matter. Anaerobic liquefaction of the solids occurs in the tank. The overflow of liquid sewage is discharged throughout a subsurface infiltration system where soil provides sewage treatment. A biomat forms at the infiltration surface and the soil beneath this surface provides aerobic physical, chemical, and biological treatment as the sewage migrates into the soil strata. Systems are designed with hydraulic and mass loadings and geometric distribution methods to ensure treatment takes place in the upper reaches of the soil and clean water is discharged to groundwater. Removal of accumulated sludge in the septic tank is performed on an as-needed basis.

The septic tank and infiltration drain field treatment system is most appropriate for cottage settlements that do not have shallow groundwater tables. The system is depicted below:

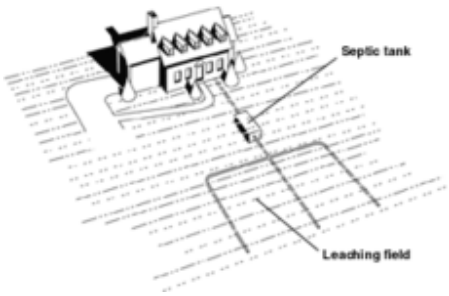

Septic Tank and Infiltration Drain Field

Alternative 2 - Oxidation Ponds

Oxidation ponds (OPs) are an inexpensive wastewater treatment technology for sites that have sufficient land and site-specific conditions permitting large, shallow lagoons. OPs are also known as stabilization ponds or lagoons. They are used for simple secondary treatment (85% removal of sewage pollution as measured as biochemical oxygen demand). Bacteria in the ponds degrade organic matter in the sewage producing cellular material and minerals that support the growth of algae and other organisms. Growth of algae allows further decomposition of the organic matter by producing oxygen. The production of this oxygen replenishes the oxygen used by the bacteria. OPs are usually shallow which allows for oxygen mixing and penetration of sunlight – helping to maintain aerobic conditions and promote needed algal growth. OPs need to be properly sized in cold climates because they are strongly influenced by seasonal temperature changes and they tend to fill, due to the settling of the bacterial and algal cells formed during the decomposition of the sewage. The OP treatment processes are slow, thus requiring large holding capacities and retention times of one month or more. OPs are usually lined with impermeable material (e.g., clay, soil cement or membranes) to prevent vertical migration. This technology is most appropriate to IDP cottage settlements with large areas of available land. Solids can accumulate at the bottom of the OP and monitoring is needed for periodic removal.

Alternative 3 – Aerated Lagoon Treatment

Aerated lagoons are pond-like bodies of water or basins designed to receive, hold, and treat wastewater for a predetermined period of time. Lagoons can be lined with material, such as clay or an artificial liner, to prevent leaks to the groundwater below. Diffused aeration or motor driven, mechanical aerators provide a combination of liquid aeration and mixing. Diffused aeration involves injection of air under pressure below the liquid surface, bubbled through diffusers on the bottom of the lagoon. Mechanical aerators produce a gas - liquid interface by entraining air from the atmosphere and dispersing it into bubbles. Both diffused air and mechanical aerators provide air required by the biological oxidation reactions in the basins, and they provide the mixing required for dispersing the air and for contacting the reactants (that is, oxygen, wastewater and microbes). Basins are constructed in, or on the ground surface, using earthen dikes to retain the wastewater within which natural stabilization processes occur with the necessary oxygen coming from the mechanical aerators or atmospheric diffusion. Treated effluent is discharged to streams/rivers. An aerated lagoon basin with mechanical aeration is depicted below:

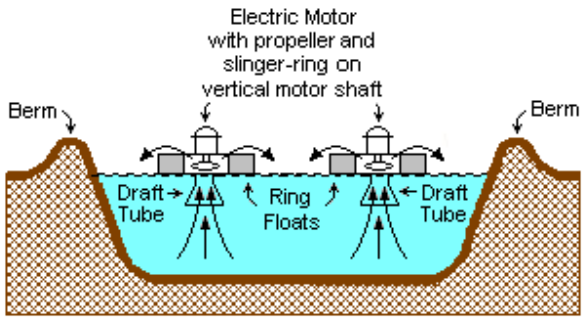

A TYPICAL SURFACE – AERATED BASIN

Note: The ring floats are tethered to posts on the berms.

Aerated lagoons using diffused aeration or floating surface aerators achieve 85% removal of sewage pollution as measured as biochemical oxygen demand. Lagoon retention times of 1 to 10 days are needed and ponds are typically 1.5 meters deep. Aerated lagoons are sensitive to temperature and operate best between 0 °C and 40 °C. At colder temperatures, the rate of biological reactions slow and retention time may need to be extended. Solids are generally digested in the rich oxygen mixing conditions and are not usually a maintenance issue.

Alternative 4 – Latrines

Several types of new latrine toilet systems are possible components of this alternative. Latrines, composting toilets, and the Enviro Loo dry toilet are considered as alternatives to constructing wastewater collection networks and sewage treatment plants at each cottage. The Ventilated Improved Pit Latrine (VIP) is an improved simple pit toilet that reduces fly and mosquito nuisance and unpleasant odors. A screen at the top outlet of a black vent pipe fitted to the pit reduces flies and mosquitos and odor is carried upwards by a chimney effect where wind creates a strong circulation of air through the toilet, down through the squat hole, across the pit and up and out of the vent pipe (leaving the toilet odor-free). Latrines and dry toilets remove human waste without a water discharge. Liquid and solid wastes are separated. Aerobic processes or composting treats the waste. Bacteria at elevated temperature break down the waste or materials are added for composting. Latrines and dry toilets may also use air to dehydrate the solid waste and evaporate liquid waste. A variety of systems are available.

They are not a pit in the ground, they are a sound environmental alternative to constructing wastewater collection networks and sewage treatment plants in each settlement.

Alternative 5 – Activated Sludge Treatment

The activated sludge wastewater treatment process involves air introduced into a mixture of screened sewage combined with organisms to develop biological particles which reduce the organic content of the sewage. This biological material is largely composed of bacteria and the combination of wastewater and biological mass is commonly known as mixed liquor. In all activated sludge plants, once the wastewater has received sufficient treatment, excess mixed liquor is discharged into settling tanks and the treated effluent is discharged.

Part of the settled material, the sludge, is returned to the head of the aeration system to re-seed the new wastewater entering the tank. This fraction of the biological particles is called return activated sludge. Excess sludge--waste activated sludge--is removed from the treatment process to keep the ratio of biomass to food supplied in the wastewater in balance. The excess sludge is stored in sludge tanks and is further treated by digestion, either under anaerobic or aerobic conditions prior to de-watering and disposal.

In this method, treated effluent from the activated sludge treatment plant is disinfected with chlorine and discharged to streams/rivers. The activated sludge treatment system is depicted below:

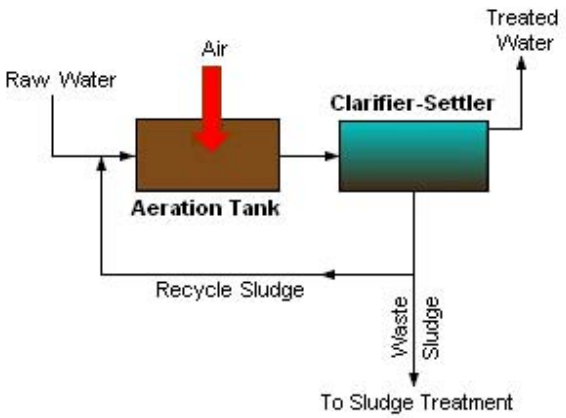

Alternative 6 – No Action

The No Action Alternative means that GMIP will not provide sewage treatment and therefore, untreated sewage will continue to be discharged from IDP cottage settlements through the use of latrines and sewer pipes. If sewage collection systems are not installed, IDPs will continue to be exposed to disease and public health problems will continue at cottages. If collection systems are installed without a treatment system, streams/rivers will be polluted with the untreated sewage containing organic matter, solids and chemical and biological pollutants. Among the public health problems that IDPs in cottage settlements are likely to encounter are gastro intestinal diseases such as diarrhea, though other more serious infections are possible such as cholera and typhoid, hepatitis and salmonella type diseases. Diarrhea will be the most common public health problem and children and the elderly would be at highest risk. In addition, the environment continues to be at risk under the No Action Alternative. Of particular concern are the public waters receiving the sewage and any fish

inhabiting the waters. Birds and wildlife that use the water are also at risk. The public at large may also have health problems if they eat fish from these waters.

3.5.2 Comparison of Environmental Impacts of Activity-Specific Alternatives

Table 3.2 presents environmental impacts of the sewage treatment alternatives in comparative form with the intention of sharpening the issues and providing a clear basis for choice among the options (22 CFR 216.6(c)(3)).

Table 3-2: Comparison of Environmental Impacts of Sewage Treatment Alternatives

(+2) highly positive effect/beneficial; (+1) positive/beneficial; (-2) significant negative effect/highly detrimental; (-1) negative effect/detrimental; (0) remains the same (i.e., no effect or same rate of change versus gets progressively worse or better)

C=Construction phase; O=Operation phase

Potential environmental issues	#1 Septic Tank-Infiltration Drain Field		#2 Oxidation Ponds		#3 Aerated Lagoon Treatment		#4 Latrines		#5 Activated Sludge Treatment		#6 No Action
	C	O	C	O	C	O	C	O	C	O	
Land use (amount of land converted to an another use)	-1	-1	-2	-2	-1	-1	0	0	-1	-1	0
Soil resources (disturbance)	-1	0	-2	0	-1	0	0	0	-1	0	0
Water resources											
Ground water	-1	+2	-1	+1	-1	+1	0	+2	-1	+1	-1 (for ground and surface water, continued contamination could result in major impacts; and at some point, could have substantial fish, wildlife, and human health costs)
Surface water	-1	0	-1	+2	-1	+2	0	+1	-1	+2	-1
Fisheries	-1	+1	-1	+1	-1	+1	0	+1	-1	+1	-1
Wildlife	0	0	0	0	0	0	0	0	0	0	0
Human Health	0	+2	0	+2	0	+2	0	+1	0	+2	-2
Socio-cultural acceptance	0	0	0	0	0	0	0	-2	0	0	0
O & M		-1		0		-1		-1		-2	0

Social and environmental effects of the alternatives are summarized, based on the table, as follows:

- Two alternatives, Aerated Lagoon and Activated Sludge, provide about the same environmental impact and benefit. Aerated lagoons are often constructed as ponds while activated sludge is constructed in tanks or concrete basins. Both systems utilize external mechanical or diffuse air for aeration and mixing. Aerated lagoons are relatively simple, they are inexpensive, require little

operator attention, and low levels of maintenance. The system is turned on and typically left on for long periods. The only O&M cost is the electricity for mechanical or diffuse. Activated sludge treatment requires operator attention to maintaining solids levels in the aeration basin and returning and wasting proper amounts of sludge. They are subject to upset and may be difficult to re-establish the proper mixture of microorganisms. Activated sludge requires tanks or concrete basins and final clarification, its capital cost is significantly higher than the cost of aerated lagoons. Annual O&M costs are also higher. Both systems provide 85% or more removal of sewage pollution. The environmental impact of both systems on receiving rivers/streams is about the same. Both systems have similar benefits of environmental and health improvement and protection.

- Septic Tank and Infiltration Drain Field Treatment (STIDFT) provides more environmental benefit in terms of no discharge to receiving rivers/streams but there is some residual pollution that may move through the soil drain field. Household septic systems have the advantage of decentralized operations and maintenance with each household responsible for these tasks. If the system is not operated properly, there could be some pollution of groundwater. Also, children could come into contact with sewage in the drain field. STIDFT provides effective treatment at low cost, and the potential for system failure that would pollute groundwater is small.
- The No Action Alternative provides no environmental or health benefits as sewage would continue to be untreated, polluting surface and/or groundwater and potentially causing health problems for IDPs. The receiving waterways will be affected, and could reach a point where there could be fish kills.

As far as land use/conversion, oxidation ponds require the largest area of land, and latrines the least land disturbance. Aerated lagoons provide sewage treatment to secondary level, yet require less land than the other biological treatment options (which also provide secondary treatment).

As stated, Activated Sludge treatment would provide about the same benefits as Alternative 1. However, the cost of this system and the need for greater operator attention and maintenance make this alternative less desirable than the other alternatives.

Ventilated Improved Pit Latrines require regular (2–3 years) removal of pit contents. Composting toilets require skilled O&M personnel to prevent noxious odors and potential contamination of the surrounding area; dry toilets need to be replaced periodically as pits fill up (depending on the depth of pits and toilet to user ratio); and Enviro Loo dry toilets require regular on-site preventive maintenance, which may be difficult for IDPs in cottage settlements. In addition, composting toilets are moderate to expensive and the replacement costs can also be expensive depending on the complexity and quality of the system. A major disadvantage in some communities is social acceptance particularly when access to piped water is not a problem.

For Enviro Loo dry toilets, preventive maintenance may be a problem for some IDPs (e.g., checking the liquid level below the drying plate under the toilet, ensuring the liquid and solid waste are separate and allow for aerobic operations [and if not, pumping out and removing all liquid from the liquid holding area may be necessary], expecting owners to rake solid waste from under the pan section toward the open rear-end, and ensuring operation of the wind turbine on top of the external vent pipe and air flow to side inlet pipes.)

Since decisions on the treatment system will have to be made individually for each cottage settlement based on on-site conditions, this PEA provides a decision tree for GMIP to use in identifying the appropriate treatment system (Figure 6-1). All the types of treatment systems being considered provide

high levels of pollutant removal. Construction impacts are minimal, and are mitigatable using best practices (See EMMP in Chapter 6).

3.5.3 Rationale for Eliminating Activity-Specific Alternatives for Further Evaluation

The PEA Team identified two additional activity-specific alternatives for sewage treatment--Constructed Wetlands (CW) and Rotating Biological Contactors (RBCs). The rationale for not including them in the PEA is provided below.

CWs use wetland plants in a constructed wetland environment to treat sewage. They can be designed as surface flow, subsurface flow, horizontal, or vertical flow. CWs provide a high degree of biological improvement and depending on design, act as a primary, secondary, and sometimes tertiary treatment. They are highly productive systems as they copy natural wetlands and their fundamental recycling capacity of the hydrological cycle in the biosphere. However, CWs were not included as a viable alternative for IDP cottages because they have not been used in Georgia and require specific skills unavailable in the country, and they require highly efficient effluent clarification and large land areas.

Rotating Biological Contactors (RBCs) are mechanical secondary treatment systems, robust and capable of withstanding surges in organic load. They use rotating disks to support the growth of bacteria and microorganisms present in the sewage, treating the organic pollutants. Microorganisms on the RBCs need oxygen to live and food to grow. Oxygen is obtained from the atmosphere as the disks rotate. As the microorganisms grow, they build up on the media until they are sloughed off due to shear forces provided by the rotating discs in the sewage. Effluent from the RBC is then passed through final clarifiers where the microorganisms in suspension settle as sludge. The sludge is withdrawn from the clarifier for further treatment or disposal. RBCs were not included as a viable alternative for sewage treatment because their use in Georgia is very limited; they are complex and very expensive.

These two alternatives were eliminated because they are not practicable in Georgia for the cottage settlement situation.

4. AFFECTED ENVIRONMENT

This chapter provides a general description of the human and natural environment of the GMIP implementation area. It describes, in general terms, the current conditions, including socio-economic, cultural, land uses, soils, geology, biodiversity, climate, air, and water.

As shown on the map (Figure 4.1), the "affected environment" for the 11 cottage settlements is the east-central section of the country. For the durable housing component (although final decisions on which of the 118 buildings to rehabilitate have yet to be made), the "affected environment" is spread throughout the eastern and western parts of the country along the main east-west connection route (Figure 4.2). The cottages are located in the Shida Kartli Region and in two settlements in Mtskheta-Mtianeti region. The durable housing units are located in all regions of the country.

Ten cottage settlements will be provided with potable water improvements, 8 settlements will be provided with sewage collection and treatment and 6 settlements will be provided with drainage improvements (See Appendix 8.9). As mentioned in Chapter 2, up to 118 buildings (durable housing solutions) will be renovated (the final number will depend on available funds). The affected human environment is the population living at the IDP cottage settlements; and those currently living at or who will live at the buildings (durable housing solutions, some of which are currently vacant). The indirectly affected population for both is considered the neighborhood adjacent to the renovations.

The durable housing solutions (buildings) are mainly in cities and the cottage settlements are in rural areas or small size cities. The affected natural environment for the cottage settlements is the settlement area, the water and wastewater treatment locations, drainage and discharge sites, and the vicinity around these areas. The affected natural environment for the durable housing solutions is the footprint of the buildings and the general vicinity around the buildings.

As stated in 22 CFR 216, the "affected environment" should be succinctly described and the focus should be on the areas "to be affected or created by the alternatives under consideration. The descriptions shall be no longer than is necessary to understand the effects of the alternatives." In line with this, the baseline description of the affected environment sets the benchmark for the evaluation of the impacts of the program and its alternatives in Chapter 5. However, in many cases, country-wide information is described to represent project-specific information; given the widespread nature of the program, the PEA Team considered this country-level information valid.

4.1 Description of Project Beneficiaries

4.1.1 Population Size and Ethnicity

According to statistics from the Ministry of Internally Displaced Persons from the Occupied Territories, Accommodation, and Refugees of Georgia (ttp://mra.gov.ge), Georgia's periods of conflict have resulted in approximately 258,000 IDPs located throughout the country.

Figure 4-1: Map of IDP Cottage Settlements

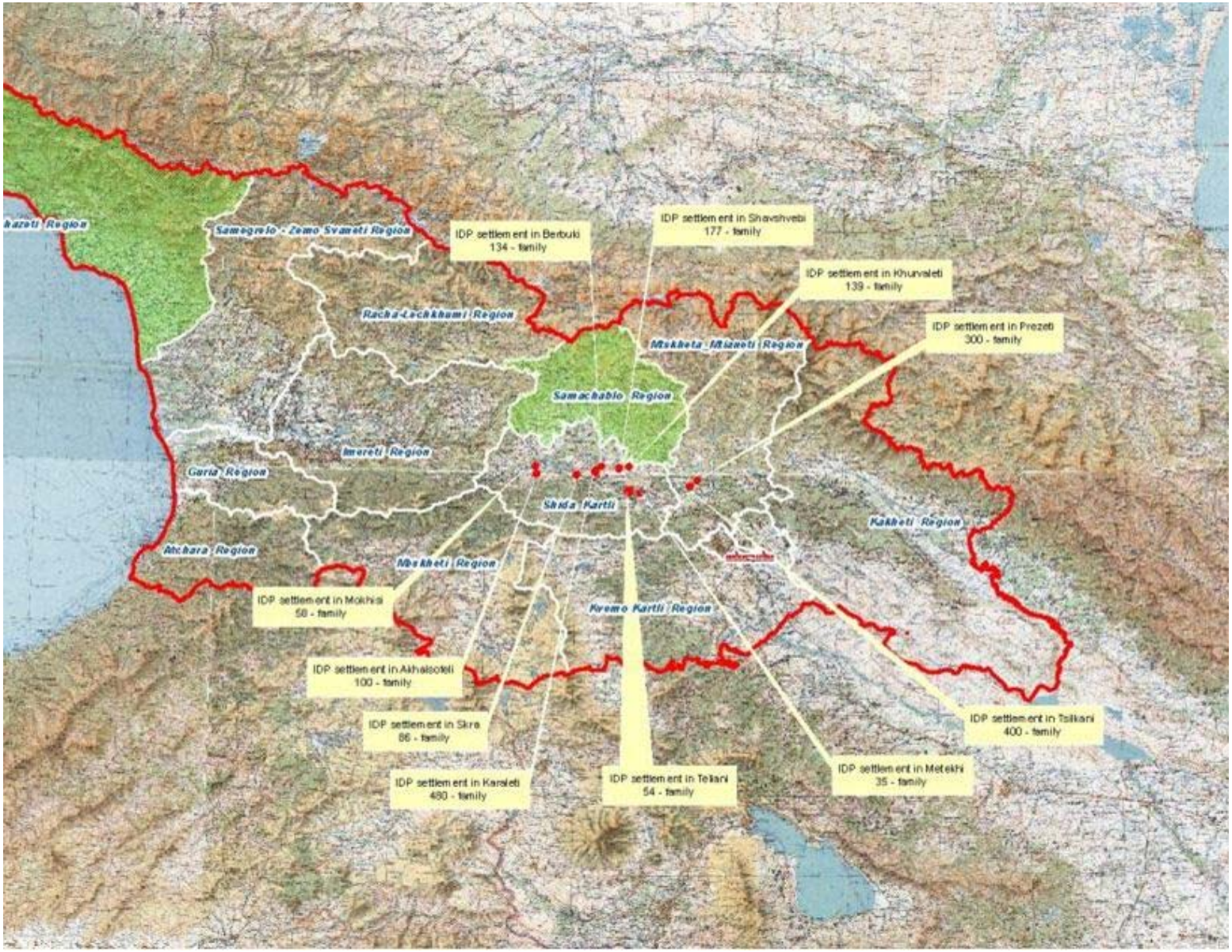

Figure 4-2: Map of IDP Building Locations

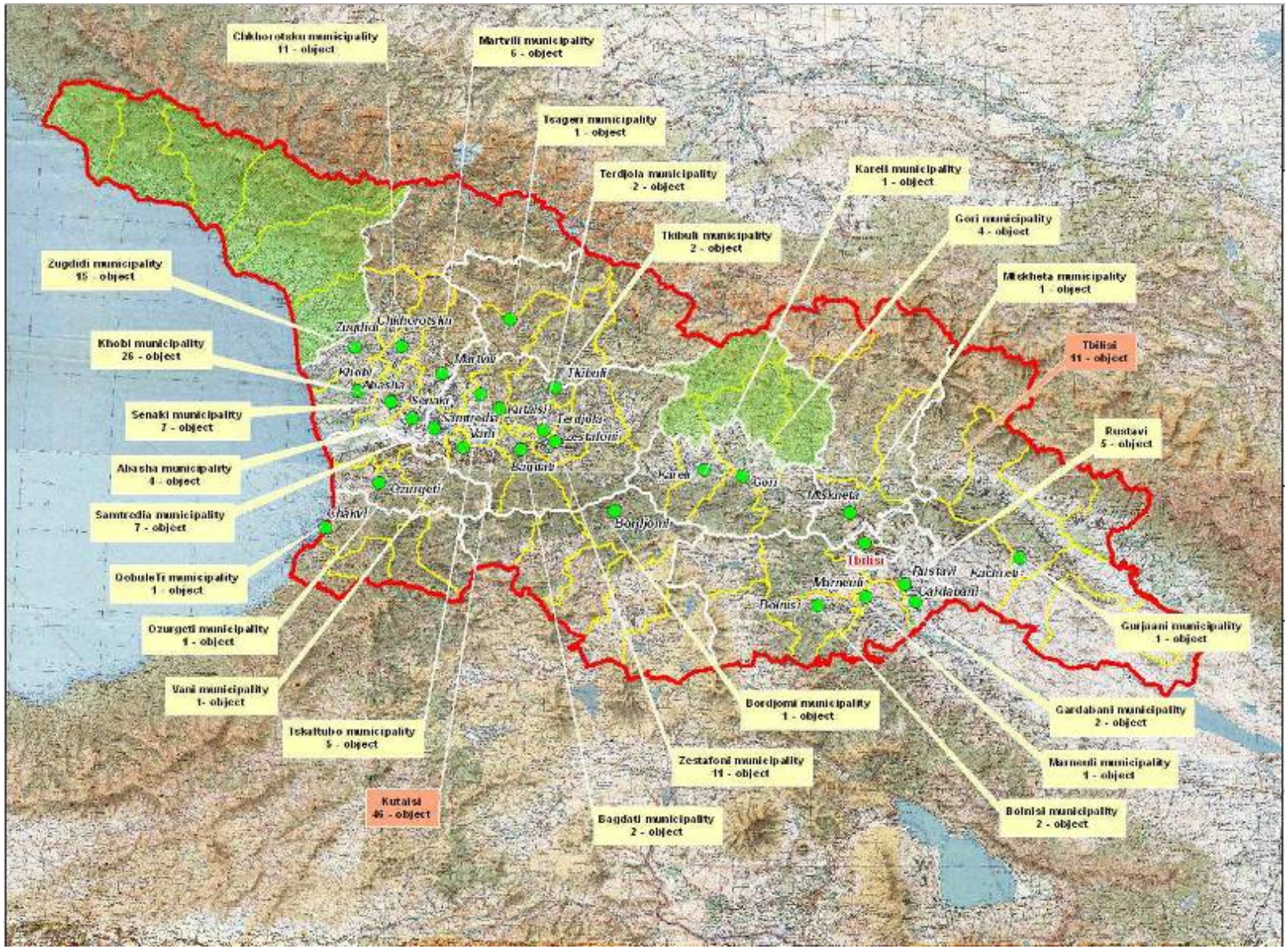

According to the UNDP Human Development Report (2010), 247-249,000 IDPs were reported in Georgia in 2008. Of the total number of IDPs from the two conflicts, the directly affected project beneficiaries at the cottage settlements is approximately 6,000 and the number of beneficiaries at the buildings is approximately 6,000--the total IDP population directly benefiting by these two program improvements is estimated to be 12,000.

The following discussion covers the Imereti and Samegrelo-Zemo Svanei Regions as examples of the affected area. About 45% of IDPs are concentrated in these two regions and they therefore, provide a good illustration of where GMIP will work and the affected population.

Table 4-1: IDPs residing in Imereti and Samegrelo-Zemo Svanei Region (2011)

Administrative Unit	Number of IDPs	Number of IDP Households
Georgia	**258,599**	**88,796**
Imereti Region	**27,078**	**9,093**
Vani Municipality	485	168
Baghdati Municipality	404	145
Zestaponi Municipality	872	299
Samtredia Municipality	2,156	682
Samegrelo-Zemo Svaneti Region	**86,679**	**28,416**
Abasha Municipality	2,572	898
Senaki Municipality	8,744	3,034

Source: Ministry of Internally Displaced Persons From The Occupied Territories, Accommodation and Refugees of Georgia (ttp://mra.gov.ge)

The population of Imereti Region is 700,400 people, approximately 16% of the country population. Population density is 107 people per square km. About 46% of the population lives in towns and the remaining 54% in villages. The majority of the population is ethnic Georgian; the distribution is as follows: 98.5% is Georgian, 0.7% is Russian, 0.3% is Armenian, and 0.5% is other nationalities.

The population of Samegrelo-Zemo Svaneti Region is 464,100, about 11% of the country population. Population density is 63 people per square km. The landscape changes from lowland to mountainous, and the population density varies accordingly, from 36 to 180 people per square km. About 40% of the population lives in towns and 60% in villages. 99.3% of the population is Georgian, 0.4% is Russian, 0.1% is Abkhazian, and 0.2% is other nationalities.

4.1.2 Gender

In compliance with the action plan adopted at the fourth international conference in Beijing in 1995, the President of Georgia adopted a plan in 1998 to improve women's status. Of the 12 priorities set out in the Beijing document the following were selected as the focus of Georgia's action plan:

- Develop institutional mechanisms of gender equality
- Increase women's role and participation in decision making processes
- Economic policy
- Women and poverty
- Women and armed conflicts
- Improvement of women's health

- Women's rights

While these guide gender policy and national level priorities, the actual status of women, especially in rural areas, and among IDP populations, still lags behind urban areas and non-IDP populations.

The gender issues of the GMIP-affected population are common to the country as a whole, but are more pronounced for the IDPs. The most common are domestic violence fuelled by alcoholism, lack of employment, and lack of individual control over family decision making. For the IDPs, these gender-related issues can be significant.

The percent of women employed is difficult to determine because the project area mostly covers agricultural regions and most agricultural family members are self-employed. In these cases, women and men likely share the work. In the civil sector, the number of women employed in the affected regions is increasing annually and reaches the average countrywide figures.

4.1.3 Age Distribution

The age distribution pattern in Georgian villages favors an aging population. As mentioned, due to unfavorable socioeconomic and political conditions in the country, a substantial number of people migrate aboard; although information is lacking to confirm this, typically migrants are young, and this out-migration is one reason the age distribution is skewed to an older population. There is also significant migration of young people to the cities. Detailed statistics regarding internal migration are also limited, but the tendency is clear and the trend can be seen in the villages, where a mostly aged population is found. The IDP population at cottages and buildings is similarly skewed to an aged population.

4.1.4 Socioeconomic Characteristics

The affected environment covers rural areas (cottages), some nearby to cities--peri-urban (cottages and buildings), and urban areas (buildings). The villages located near to the main roads, are much better developed than settlements in remote areas, and accordingly trends and socioeconomic status among such villages differ significantly.

From a countrywide perspective, economic development has been uneven for the last decade. From 2004 to 2007, the country underwent rapid economic growth ranging between 5.9-12.3% per year. Some factors such as armed conflicts and global economic crises severely influenced the country, and GDP fell to 2.3% in 2008, and further to -3.8% in 2009 (Figure 4.3).

Figure 4-3: Nominal GDP and real GDP in Georgia for 2005-2010

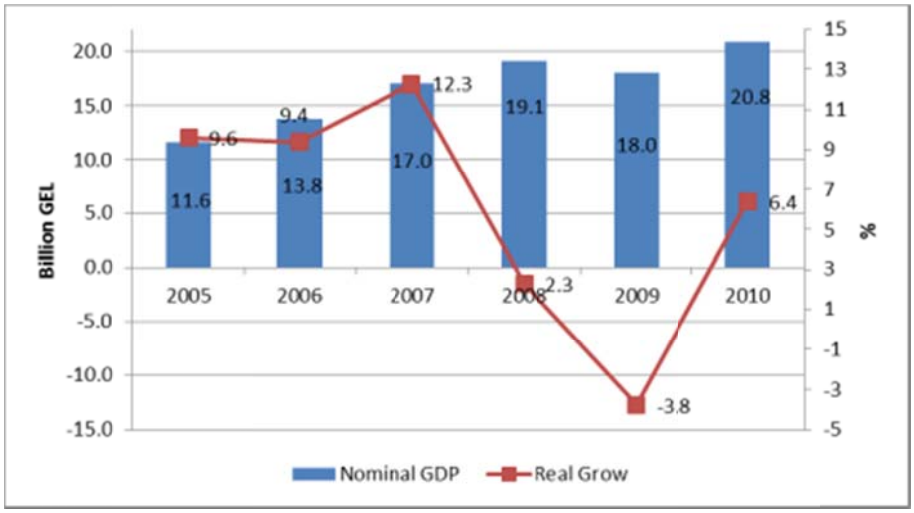

Source: National Statistics Office, 2011

However, the data are not representative of the country as a whole. Most economic activity takes place in the capital city, Tbilisi. Rural areas have suffered more than Tbilisi in the global economic downturn.

Table 4.2 provides data on the distribution among regions of the gross value added for 2006-2009. As the data show, economic activity in the whole of Georgia has been steadily rising during the last four years despite a contraction of the national economy.

Table 4-2: Distribution of gross value added by regions (at current prices, bill GEL)

Regions	2006	2007	2008	2009
Tbilisi City	5.65	7.01	7.91	7.27
Imereti, Racha-Lechkhumi and Kvemo Svaneti	1.29	1.67	2.03	2.02
Kvemo Kartli	1.23	1.40	1.35	1.33
Samegrelo-Zemo Svaneti	0.92	1.05	1.19	1.22
Adjara	0.74	0.97	1.22	1.19
Shida Kartli and Mtskheta-Mtianeti	0.77	0.92	0.98	0.91
Kakheti	0.71	0.79	0.98	0.83
Samtskhe-Javakheti	0.43	0.45	0.53	0.48
Guria	0.31	0.35	0.33	0.31
GDP at basic prices	**12.05**	**14.61**	**16.52**	**15.55**
GDP at market prices	**13.79**	**16.99**	**19.07**	**17.99**

Source: National Statistics Office of Georgia, 2010

In the project-affected regions, agriculture is one of the most important sectors, it determines the main socioeconomic status, and it employs a majority of rural residents. About 93% of rural plots are smaller than two hectares. Such small land parcels are primarily suitable for subsistence farming, which represents 99.8% of the agricultural sector. 82% of farmers in Georgia produce crops, cattle, and poultry only for self-consumption. In Imereti and Samegrelo-Zemo Svaneti (the representative regions for this PEA), subsistence farmers comprise 96% and 87% respectively (Agricultural Census of Georgia, 2004). Typically in project affected areas, lands owned by farmers are fragmented—they are located in different locations—this restricts development of the agriculture sector.

In general, the unemployment rate is high in rural areas as well as in cities, and as mentioned, in the villages, the population is mostly self-employed in agricultural activities. The employment rate in western Georgia is less than in the eastern part.

Perhaps of more concern than actual numbers of employed, is that according to UNDP (HDR, 2010), over 62% of employment countrywide is ranked as "vulnerable," or as unpaid family workers or self-employed. 17.4% of employed live on less than 1.25 US$/day (Table 4.3).

Table 4-3: Recent Work Indicators for Georgia from UNDP Human Development Report (2010)

Employment to population ratio (% of population ages 15–64)	**Formal employment** (% of total employment)	**Vulnerable employment**[a] (% of total employment)	**Employed people living on less than US$1.25 a day** (% of total employment)	**Unemployment rate by level of education** (% of labor force with given level of attainment)		**Child labor** (% of children ages 5–14)
				Primary or less	Secondary or above	
2008	2000–2008[c]	2000–2008[c]	2000–2008[c]	2000–2008[c]	2000–2008[c]	1999–2007[c]
54.3	37.8	62.2	17.4	7.1	30.3	18

a. Percentage of employed people engaged as unpaid family workers and own-account workers. c. Data refer to the most recent year available during the period specified.

Table 4.4 shows the employment status at a countrywide level showing approximately 19% unemployment.

Table 4-4: Labor force and employment status for Georgia (2010)

Description	Georgia	
	Thousand	**%**
Total labor force	1944.9	
Employed, including	1628.1	82%
Formally employed	618.6	38%
Self employed	1007.1	62%
Unclear	2.4	
Unemployed	316.9	19%

Source: National Statistics Office (2011)

Income levels differ significantly between rural and urban areas. In urban areas, formal employment is the main source of income, while in rural areas income generation is mainly from sales of agricultural products, pensions, scholarships, and state financial assistance. Average monthly income for those employed in formal sectors was 557 GEL in 2009. However, average monthly income for those employed in the agricultural sector was estimated at 264 GEL in the same year (the exchange rate is approximately US$1 to 1.60 GEL).

Besides employment, socioeconomic status is also based on the availability and quality of private and public facilities. All villages in the project affected area have continuous power supplies. However, problems with the power systems are common, such as:

- Power line poles are old and are knocked down during storms, causing power termination
- Power consumption is tracked communally, which does not enable precise recording of power consumption by individual households.

The following public facilities are found in the settlements and towns in the project area:

- *Gamgeoba Offices*, which mainly require refurbishment
- Schools, some of which have been renovated under the USAID "Support to Schools" program, but others still require refurbishment and equipment
- Newly built police offices, which are present in relatively larger villages
- Outpatients' clinics, which are available in almost all the villages
- Clubs, cultural centers, and libraries, available in some villages
- Shops with essential commodities, drug shops, and refueling stations, found in almost every village

In general, the affected population has access to education and public health care facilities. Primary schools (1-4 grades) are available in all settlements in the regions. However, for the higher grades, children from some small villages must attend schools in neighboring villages. Public transport between neighboring villages is rarely available, thus the majority of such students must walk to school. There are usually 100-150 students in each school in rural areas.

Communication in the target communities is through cellular networks. The population has access to free TV programs of the Georgian Public Broadcaster and Rustavi-2. Satellite and cable TV are also

available. Georgian radio broadcasting ("Apkhazetis Khma") is also available in the target regions. National newspapers are available in the municipal centers and villages.

4.1.5 Public Health Status

The public health system in Georgia is based on a centralized system. The main ambulances and hospitals are concentrated in large cities, and small outpatient clinics are available in most villages. Government is currently focusing on developing improved health care facilities in all regions.

The health system is based on direct payments for services; however there is a government-provided emergency service system available in municipal centers. These provide transportation services to area hospitals. Government-owned and private hospitals are obligated to provide free emergency care (paid by the central budget). There is also Government-supported insurance for people in need, and there is a health program available for those over 65.

Several private, local, and international companies provide insurance services to the population. Most employed individuals have corporate insurance schemes, and have access to high quality health care services through insurance companies.

Table 4.5: presents country wide health indicators defined by the UNDP for year 2010.

Table 4-5: Health Indicators

RESOURCES			RISK FACTORS					MORTALITY				
Expenditure on health	**Physician**	**Hospital beds**	**Infants lacking immunization against**		**HIV prevalence**			**Infant**	**Under-five**	**Adult** (per 1,000 people)		**Age-standardized death rates from non-communicable diseases**
			DTP	**Measles**	**Youth** (% ages 15-24)		**Adult** (% ages 15-49)					
Per capita (PPP US$)	(per 10,000 people)		(% of one-year-olds)		Female	Male	Total	(per 1,000 live births)		Female	Male	(per 100,000 people)
2007	2000–2009[a]		2008		2007			2008	2008	2008	2008	2004
384	45	33	8	4	0.1	0.1	0.1	26	30	85	232	554

Source: UNDP HDR 2010

4.2 Geographic and Geologic Characteristics

Georgia is a mountainous country covering 70,000 km2, situated between the south slope of the Caucasus Mountains, the east coast of the Black Sea, and the northern edge of the Turkish Anatolia plain. According to http://dictionary.sensagent.com/geography%20of%20georgia%20%28country%29/en-en/#Location, despite its small area, Georgia has one of the most varied topographies of the former Soviet republics. The country lies mostly in the Caucasus Mountains, and its northern boundary is partly defined by the Greater Caucasus range. The Lesser Caucasus range, which runs parallel to the Turkish

and Armenian borders, and the Surami and Imereti ranges, which connect the Greater Caucasus and the Lesser Caucasus, create natural barriers that are partly responsible for cultural and linguistic differences among regions. Earthquakes and landslides in mountainous areas present a significant threat to life and property. Among the most recent natural disasters were massive rock and mudslides in Ajaria in 1989 that displaced thousands in southwestern Georgia and two earthquakes in 1991 that destroyed several villages in north-central Georgia and South Ossetia.

From a geomorphologic standpoint, the area belongs to the Shida Kartli Ravine located between greater and smaller Caucasus. The four rivers, Tortla, Mejuda, Pshana, and Didi Liakhvi, flow from the north to south across the Tiriponi-Saltvisi plain, which is slightly inclined to the south. The Gori depositional plain is developed within the Tortla-Liakhvi section. Its relief is characterized by an abundance of terraces inclined to the south, built mainly of pro-alluvial and alluvial sediments.

4.3 Land Use Characteristics

The cottage settlements are existing small houses, located mainly on and adjacent to agricultural lands, and surrounded by rural or peri-urban areas. The buildings to be rehabilitated are in mainly urban areas surrounded by city neighbourhoods and industrial facilities, interspersed with agricultural land. The majority of the project areas have some agricultural lands, including arable lands and pastures, in the vicinity of the houses. All housing infrastructure where GMIP will work currently exists; no new housing infrastructure will be constructed.

The Shida Kartli Region, where most of the cottage settlements are located, is primarily characterized by agricultural land use. Farmers cultivate fruits and vegetables, annual crops, vine grapes, and also raise livestock, mainly cows, sheep, and pigs. In mountainous and hilly areas, pasture for livestock is the prevailing land use, whereas on the ravine from Gori to Khashuri, the cultivation of fruit plantations (apples, pearls, plums, etc.) is more common. Also in ravines are found vineyards, maize, vegetables, potato, melons, and other crops.

Due to the more humid and sub-tropical climate in the western part of Georgia, land use is different than in the east. Both in Imereti and Samegrelo-Zemo Svaneti, farmers mainly cultivate annual crops (Tables 4.6, 4.7 and 4.8) including maize, vegetables, potato, and melons. The most common crop in these regions is maize. In Imereti and Samegrelo-Zemo Svaneti respectively 76% and 83% of arable lands are under maize. Some families have greenhouses, where they grow vegetables (tomato, cucumber, greens) and flowers.

Table 4-6: Structure of agricultural land by usage types (Agricultural Census, 2004)

Region		Agricultural land total	Arable land	Land under perennials	Greenhouses	Pastures and meadows
Imereti	Ha	88,410	72,101	12,246	193	3,871
	%	100	81.6	13.9	0.2	4.4
Samegrelo-Zemo Svaneti	Ha	86,933	52,262	22,416	12	12,243
	%	100	60.1	25.8	0.0	14.1

Table 4-7: Land under one year crops (Agricultural Census, 2004)

Region	Wheat	Maize	Potato	Sun-flower	Vegeta-bles	Melon	Fodder
	Ha						
Imereti	411	54,560	924	19	4,896	834	510

Samegrelo-Zemo Svaneti	0	43,526	997	0	2,330	295	244

Orchards mainly consist of apples, quince, cherry, and plum, and are primarily for subsistence use. The Imereti Region is known for vineyards, where they grow Tsolikauri, Aladasturi, Adesa, and Tsitska. Table 4.8 shows the importance of viniculture in Imereti Region, where vineyards comprise 70% of perennials.

The more pronounced subtropical climate of Samegrelo-Zemo Svaneti is more favorable for orchards and tea plantations, which together make up 80% of land under perennials (52% and 27% respectively). Citrus fruits are also more common in that region.

Table 4-8: Land under perennial crops (Agricultural Census, 2004)

	Orchards	Berries	Vineyards	Citrus	Tea plantations	Others
	Ha					
Imereti	2,038	45	8,584	8	916	655
Samegrelo-Zemo Svaneti	11,689	27	775	845	6,144	2,935

Many farmers in both regions breed cattle and poultry. The majority of farmers have one to six head of cattle (86%-Imereti, 88%-Samegrelo-Zemo Svaneti). Large farms are less common in the both regions. Only 12 farmers were registered to have 50 or more head in Imereti during the 2004 Agricultural Census; however, in Samegrelo-Zemo Svaneti, a large part of which is highland, cattle breeding is more traditional there, and 63 farms with 50 or more cattle were recorded. Table 4.9 shows the population of cattle and poultry for the two regions in 2004.

Table 4-9: Number of livestock and poultry in Imereti and Samegrelo-Zemo Svaneti (Agricultural Census 2004)

	Imereti	Samegrelo-Zemo Svaneti
Cow	138,085	178752
Buffalo	1,148	16779
Sheep	26,789	2442
Goat	14,089	20103
Pig	99,914	133546
Horse	4,091	9900
Total livestock	***284,116***	***361,522***
Bee hives	27,728	18278
Poultry	2,251,607	2,075,250

4.4 Cultural and Historic Resources

Historically, the human population in the GMIP-affected area was very dense. Thus, when an activity involves movement of soil, historical artifacts are often unearthed. However, during the scoping exercise, and based on a literature review and meetings with local people and authorities, no potential archaeological, historical, or cultural sites in the vicinity of planned intervention areas were identified. Buildings selected for rehabilitation are not listed as cultural and/or historic property.

4.5 Environmental Baseline Information

According to the USAID/Georgia Biodiversity Assessment (Chemonics International, 2000), forests covered 40% of the country (2.8 million ha), and are found largely in the Greater Caucasus Mountains (Georgia's northern border), the Lesser Caucasus (its southern border), and in intervening lowlands and foothills. The principal landscapes of the Caucasus include foothill and mountain forests and subalpine meadows of the Greater and Lesser Caucasus, treeless mountain upland plateaus of the Lesser Caucasus, humid lowland forests of western Georgia, and the arid steppe and deserts of eastern Georgia.

As mentioned, the project area covers most of Georgia, and is concentrated in the central territory, mostly in the ravine between Great and southern Caucasus. Below, is a description of the general characteristics of the territory focusing on environmental characteristics common to the target regions. The description is not based on a resource inventory, but on visits to the sites and a general characterization of the resources.

4.5.1 Environmental Data

East Georgia, Kartli ravine

The project area is part of the Kartli lowland in the eastern/central part of Georgia between the southern outcrops of the Greater Caucasus ridge and Adjara Trialeti ridges (lesser Caucasus). In geographic terms, the target area is the corridor located in the valley. The landscapes are mostly flat ravine, sometimes hilly, with a well-developed river network.

The geomorphology of the area is strongly dependant on the geology of the ridges along the Shida Kartli Valley. The geology of the valley is later tertiary and quaternary sediments. The valley itself is a long, narrow depression from the west to the east, from the village of Tashiskari to the village of Dzegvi (near Mtskheta). The valley was formed by the Mtkvari (Kura) River, which transects the valley.

The landscape along the approximately 80-90 km is Mtkvari river terraces (1st and 2nd terraces). The width of the terraces varies from 2 to 17 kilometers. The wide terraces start from the area around Khashuri and they narrow near Gori City. After Gori, the terraces become wide again. This type of landscape continues to Tbilisi city. The elevations of terraces start at 700 masl, and decrease to 450 m near Mtskheta.

The Mukhrani-Tiriphoni Valley is located at the most eastern part of the project area, and is represented as a flat landscape area. It is formed of quaternary alluvial sediments, rich in groundwater with very shallow depth to groundwater.

As mentioned, agricultural activities in the valley were historically very developed, and conversion from natural vegetation to agriculture has happened over centuries as farmers were drawn to this area because of the valuable soil and good climate for crops, including vegetables and fruits. During the 20th century, irrigation systems were established on some sections, especially from Gori to Khashuri city, where most of the cottage settlements are located. Agriculture has a long history in this part of Georgia, and as a result, the landscape is primarily agricultural land, with mixed forest and prairie type and open prairie ecosystems found in fragments on the landscape. While historically, this section of Georgia was covered with forest, due to clearance for agriculture, only relict valley forests remain.

The locations of the cottage settlements and buildings are in already built-up areas, and there are no natural prairies or forest in the vicinity of the project areas. Photographs are representative of the

ecological conditions around the sites of the cottages and buildings, and photographs of each cottage and building site are available at the GMIP office. These photographs illustrate the built-up, disturbed conditions at the sites. Vegetation is mainly cultivated flowers and grasses and cropland, with single shade trees. Natural vegetation, where it exists, is mainly scrub/shrub highly disturbed ecosystems.

West Georgia, Imereti Ridge foothills are formed by low hills and slightly sloped flat plateaus. Elevation varies from 250 to 370 meters. The surface is cut by gorges and streams, forming 10 to 30 meter deep trenches. Slopes vary between 8◦ and 25◦. The foothills are formed by alluvial sediments. Soils are mainly yellow and brown forest type. Forests are fragmented and degraded due to anthropogenic factors, such as land clearance for agriculture (as above). In the secondary forest fragments, maple, Georgian oak, hornbeam, pine, and ash-tree predominate.

The cities and towns are located within these landscapes, and most are near the main rivers. As above, the project sites are in already developed areas and are not located near the forest fragments.

West Georgia, Kolkheti Lowland occupies the central part of the region, and comprises the lowland itself and a wide strip of river terraces. The lowland is formed by the effect of the Rioni River and its tributaries and extends over approximately 45 km from the western part of the region to the east, up to Zestaponi City. The relief is almost flat and swampy at places. Elevation of these lands varies between 18 m (Samtredia) and 150 m (Zestaponi). The area is cut by 8 to 20 m deep gorges. The lowland and river terraces are mainly formed by quaternary alluvial and de-alluvial sediments, which comprise cobble, sand, and clay. In the southern parts of Samegrelo-Zemo Svaneti Region, marine sediments are found together with fluvial sediments. Abundant atmospheric precipitation and numerous rivers create conditions for peat wetlands. The lowland is overgrown by Kolchic vegetation, including Kolchic forests with evergreen subforest and flora characteristic of peat marshes. However, considerable parts of the forests and wetlands are degraded due to human impact.

As above, the cities and towns where the project sites are located are in developed areas that are already disturbed, and peat wetlands and forests are not found in the vicinity of the project sites. As described in this section, the areas at and around the settlements and buildings contain little or no natural, undisturbed vegetation.

4.5.2 Biological Diversity

As stated in the Scoping Statement, and as indicated above, biological diversity at the project sites is insignificant. The project sites are located in highly disturbed ecosystems with a long history of human use. They are not expected to harbor biodiversity of local, regional, or global importance. In rare cases, there may be wetlands and riverine vegetation near to the settlements and these may have important ecological functions; they likely provide habitat for aquatic vertebrates and invertebrates, and habitat for birds, possibly including migratory species. GMIP teams that have visited the sites have not identified on-site wetland systems, but it is possible that seasonal wetlands may exist. Large, medium, and small mammals are highly uncommon in and around the project sites. This is due to hundreds of years of habitat disturbance and destruction at the project sites; because the cottages are currently occupied; and because the buildings are in mainly urban/peri-urban locations. Therefore, wildlife tends to avoid these areas, and forests are highly fragmented, degraded, or have been destroyed.

4.5.3 Endangered, Threatened, and Protected Species and their Habitats

As above (4.6.2), it is unlikely in these highly disturbed systems, to find endangered, threatened or otherwise protected species or their habitat. While in Georgia, as elsewhere, wetlands, riverine ecosystems, and forests may provide habitat for protected species. However, as mentioned in the

Scoping Statement, information on threatened and endangered species was gathered through literature review and meetings with government authorities; none of these sources provided information on the existence of protected species at the target project sites.

4.5.4 Protected Areas and National Parks

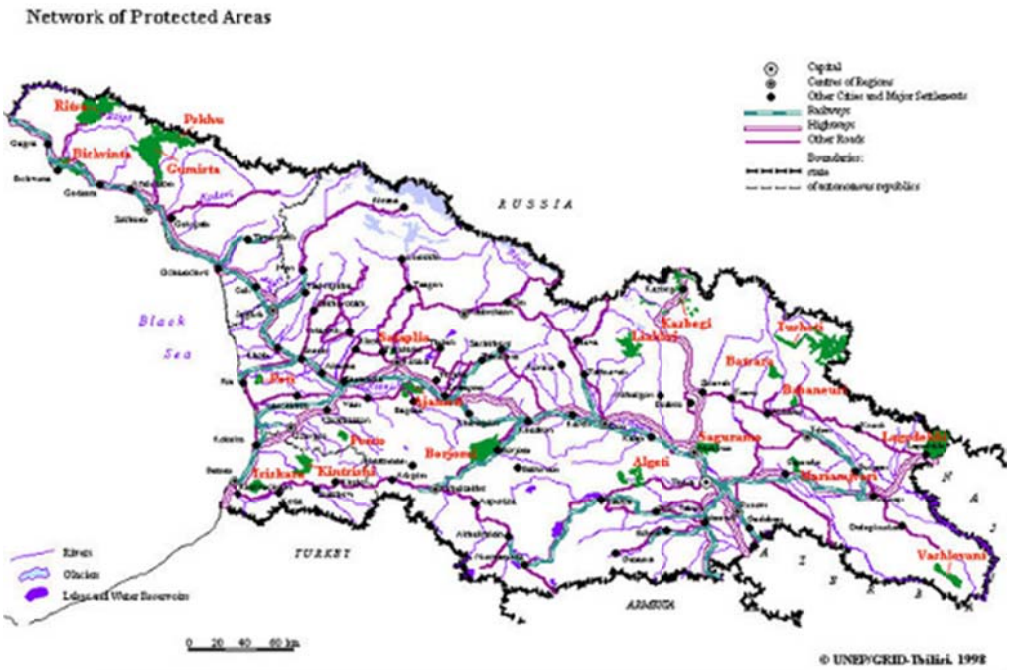

Figure 4-4: Network of Georgia's Protected Areas

[Map: http://enrin.grida.no/htmls/georgia/caucasus/protect.htm]

The above map (Figure 4.4) shows the network of protected areas in Georgia. Approximately 8% of the country is under protected area status (Chemonics International, 2000). As the scoping exercise confirmed, no protected areas, including national parks and protected forests, are located at or in the vicinity of the project sites.

4.5.5 Environmental Studies of Affected Area

Environmental studies of the "affected areas" are conducted by the Georgian Ministry of the Environment and general characteristics are published in annual reports on the state of environment. However, these provide only general environmental information of the project locations. Additionally several small and medium-sized projects have been implemented in the region for which specific environmental studies have been performed. No recent ecological inventories have been conducted in the project areas. The information in this chapter is based on these country annual reports. Meteorological data are from the Department of Meteorology.

4.6 Other Physical and Natural Resources

4.6.1 Climate

The climate in Georgia is diverse, with two distinct climatic zones: humid subtropical in the west of the country and dry subtropical transiting to continental in the east. The Greater Caucasus Range plays an important role in the climatic regime, preventing intrusion of cold air from the north and producing a warmer regime with a small number of extreme meteorological events. Another significant factor in climate formation is the Black Sea in the west, which contributes to increased humidity in western Georgia. This influence is softened toward eastern Georgia by the natural barrier of the Surami and the Adjara-Traleti Ranges. Since humid air masses predominantly transfer from west to east, orographic lifting makes excessive moisture fall on the western slopes of these mountains. Consequently, the eastern side of the mountain ranges experience lower precipitation and lower relative humidity, resulting in a transition to a dry-subtropical climate eastwards, which is also affected by the dry plains of Azerbaijan.

Freezing starts in October to late November and ends in March or April, however freezing of soil does not occur, and maximum freezing depth does not exceed 5 cm. In terms of climate, some limitations will apply for construction seasons; however it is possible to conduct construction activities year round.

The climate in western Georgia, where Imereti and Samegrelo-Zemo Svaneti Regions are situated, is humid subtropical. The Greater Caucasus Range plays an important role in the climatic regime, preventing intrusion of cold air from the north and producing a warmer regime with a small number of extreme meteorological events. On the other hand, humid air masses moving from the Black Sea make climate rather humid in western Georgia, as excessive moisture mainly precipitates on the eastern slopes of the Surami, the Likhi and the Adjara-Traleti

As above for eastern Georgia, some limitations apply, but it is possible to conduct construction activities year round.

4.6.2 Air

In several towns and regional centers there are special Hydrometeorology Department units for monitoring the environment, where observations of air quality are carried out on a regular basis (on general and specific pollutants). However, the existing air quality data are very limited in most of the project sites. In the rural and peri-urban project intervention areas, pollution levels are low. The sites around Tbilisi are the most polluted locations. In addition, there may be industrial facilities in the vicinity of some of the cottage and building sites, and these decrease the air quality in the general area.

4.6.3 Water Resources

Georgia has about 25,000 rivers. According to http://dictionary.sensagent.com/geography%20of%20georgia%20%28country%29/en-en/#Location, many of Georgia's rivers power small hydroelectric stations. Drainage is into the Black Sea to the west and through Azerbaijan to the Caspian Sea to the east. The largest river is the Mtkvari, which flows 1,364 km from northeast Turkey across the plains of eastern Georgia, through the capital, Tbilisi, and into the Caspian Sea. The Rioni River, the largest river in western Georgia, rises in the Greater Caucasus and empties into the Black Sea at the port of Poti.

The main river basins in Georgia are as follows:

- The Black Sea Basin, in the west of the country. The internal renewable surface water resources (IRSWR) generated in this basin are estimated at 42.5 km^3/year. The main rivers are, from north to south, the Inguri, the Rioni, and the Chorokhi. The main stream of the Chorokhi rises in Turkey (the Corub River) and the estimated inflow from Turkey is 6.3 km^3/year.
- The Caspian Sea Basin, in the east of the country. The IRSWRs generated in this basin are estimated at 14.4 km^3/year. The main rivers are, from north to south: the Terek and the Andiyskoye, which rise in the north of the country and flow northeast to the Russian Federation before entering the Caspian Sea; the Alazani, the Iori, and the Kura, which rise in Georgia and flow into Azerbaijan in Lake Adzhinour before flowing southeast in Azerbaijan and then entering the Caspian Sea. Two tributaries of the Kura River rise in Turkey: the Mtkvari, with an estimated inflow from Turkey of 0.91 km^3/year, and the Potskhovi, with an estimated inflow from Turkey of 0.25 km^3/year. The inflow of the Debet River, a southern tributary of the Kura River, is estimated at 0.89 km^3/year from Armenia.

The renewable groundwater resources are estimated at 17.23 km^3/year, of which 16 km^3/year are drained by the surface water network. This gives a total of 58.13 km^3/year for internal renewable water resources (IRWR). The total actual renewable water resources (ARWR) are 63.33 km^3/year.

In 1990, the total water abstraction was estimated at 3 km^3/year from some 1,700 tube-wells. According to a recent assessment another 7 km^3/year could be sustainably abstracted in the future. Groundwater use was not greatly developed during the Soviet period, due to the emphasis on large-scale state-run surface irrigation schemes.

Georgia's rivers flow a total length of 54,768 km within the borders of the country; 99.4% of them are small rivers with a length of less than 25 km. each. Hydrological studies have been made of 555 rivers of the Black Sea Basin and 528 rivers of the Caspian Sea Basin. More than 17,000 rivers (total length 32,574 km) belong to the Black Sea Basin. There are about 43 dams in Georgia, 35 of which are in the east and 8 in the west; their total reservoir capacity is estimated at about 3.4 km^3. The water is primarily used for irrigation and hydropower generation and less for water supply. The largest dam, for hydropower is the Inguri dam, with a reservoir capacity of 1.092 km^3.

Some wetlands in the country are of significant environmental importance such as:

- Central Kolkheti (33,710 ha), on both sides of the mouth of the Rioni River along the central part of the eastern Black Sea coast, in the regions Guria and Samegrelo near the city of Poti. The site contains many relicts and endemic species of flora and fauna. The area is a coastal alluvial plain, composed of quaternary deposits. Kolkheti State Reserve (500 ha), includes some of this wetland, and was established in 1947.
- Ispani (513 ha) in the autonomous Republic of Adjara, one kilometre from the Black Sea coast near the city of Kobuleti. The area supports rare mammal species and migratory water birds of international importance. The area is a coastal alluvial plain, composed of quaternary, lake-riverine and additional lake deposits, which have developed to a depth of 9–14 m.

No project sites are in the vicinity of these two wetland systems.

Water use and management

Between 1985 and 1990, total water withdrawal decreased from 4,600 to 3,500 million m^3 because of the industrial decline since the end of the Soviet Union. During 2005 the total water withdrawal was 1,621 million m^3, 66% of which came from surface water and 34% from groundwater. Agricultural water

withdrawal accounted for 1,055 million m^3 and water withdrawal for municipal purposes for 358 million m^3. Industrial water withdrawal was estimated at 208 million m^3.

The Ministry of Environment Protection and Natural Resources and the Centre for Monitoring and Prognostication are responsible for the assessment of surface water quantity, including the Black Sea, as well as groundwater. The Centre unites several departments for monitoring quantity and quality of surface water and groundwater, namely: (i) the Department of Hydrometeorology, responsible for surface water quantity observations (except of the rivers of the Ajara Autonomous Republic and the Black Sea); (ii) the Department of Monitoring of Environmental Pollution, responsible for surface water quality (except of the rivers of the Ajara Autonomous Republic and the Black Sea); (iii) the Black Sea Branch (located in Batumi), responsible for surface water quantity and quality monitoring of the Black Sea and rivers from the Ajara Autonomous Republic.

Policies and legislation

While there is no separate policy document that directly spells out Georgian policy for protecting and managing water availability and quality, the Law on Water does outline a number of key principles that comprise a policy framework (UNECE, 2003). Some of these are:

- Water protection is a major element of environmental protection for Georgian citizens, in view of both current and future needs;
- Drinking water for the population is the highest priority of all uses;
- Both groundwater and surface water are under state control;
- Management of water varies according to hydrologic importance;
- System of "user-polluter pays" is key;
- Pollution is not allowed, although a definition of what constitutes pollution is lacking.

There are more than ten major laws in Georgia that influence the protection and management of water resources and associated environmental concerns. The most comprehensive is the above Law on Water, which has been in force since October 1997 and was last amended in June 2000. The 96 separate articles of this Law cover a very wide and comprehensive set of issues, such as pollution control policies, protection of drinking water sources, licensing of water use and discharge, categorization and protection of resources, particular measures for the Black Sea, flood control, and many others. All surface water, groundwater and near-coastal water are deemed to be under the control of the national government. Many of the provisions of the Law are supplemented by legislative orders and decrees, as well as by regulations of the Ministry of Environment Protection and Natural Resources, which specify necessary actions in greater detail. The Ministry holds overarching responsibility for implementing the Law on Water, although other ministries are key players on specific topics. The Law is implemented by personnel at the regional or municipal level. The Law on Water provides for the licensing of water use and the discharge of pollutants, an approach that has been in place since 1999.

Regardless that Georgia is a country with abundant fresh water resources, the current water supply situation is extremely complicated. This is largely due to anthropogenic contamination, a deficit of drinking water, and low sanitary standards of the water supply system. Because of the degradation of the water supply and sewerage infrastructure, the quality of drinking water often does not comply with human health and safety standards. Some 38% of the water pipeline system of the cities and regions belongs in the high-risk water pipeline category, in which the microbiological contamination index is high.

4.7 Policy, Legal, Regulatory and Permitting Requirements

4.7.1 Relevant Policy, Legal, and Regulatory Requirements

A number of Georgian laws and regulations exist related to environment, social, labor, land, cultural heritage, and other technical issues, which are relevant to this PEA.

The Constitution of Georgia sets general regulating principles of environment protection. Namely, Article 37, Clause 3 states that all citizens have the right to live in a healthy environment and use natural and cultural surroundings. In addition, citizens are obliged to protect the natural and cultural surroundings. Below is a list of the principle environmental, social, health care, cultural heritage, and technical laws and regulations.

Table 4-10: Principle Laws and Regulations relevant to the Proposed Project

Year	Law / Regulation
	Environment
1994	on Soil Protection
1996	on System of Protected Areas
1996	on Protection of Environment
1996	on Mineral Resources
1997	on Wildlife
1997	on Water
1998	on Hazardous Chemicals
1999	on Protection of Ambient Air
1999	Forestry Code of Georgia
1999	on Compensation of Damage from Hazardous Substances
2000	on Regulation and Engineering Protection of Coastline and River Banks of Georgia
2005	on Red List and Red Book of Georgia
2006	on Licenses and Permits
2007	on Status of Protected Areas
2007	on Ecological Examination
2007	on Service of Environmental Protection
2007	on Environmental Impact Permit
2002	Regulation on Environmental Impact Assessment (approved by the Order No. 59 of the Minister of Environment.
	Cultural Heritage
2007	Law on Cultural Heritage
	Social, health and labor issues
2007	Law on Public Health
1997	Law of Georgia on Heath Care
2006	Labor Code of Georgia
1997	Law on Professional Unions
	Land ownership and land take

Year	Law / Regulation
1997	The Civil Code of Georgia
1997	The Civil Procedural Code of Georgia
1996	The Law of Georgia on Ownership of Agricultural Land
2010	Law on State Owned Property
2007	Law of Georgia on Entitlement of Ownership Rights to Lands Possessed (Employed) by Physical and Legal Persons of Private Law
1999	The Law on Rules for Expropriation of Ownership for Necessary Public Need
2007	Law on Replacement Cost Reimbursement and Compensation for the Use of Agricultural Land for Non-Agricultural Purposes
2007	Presidential Decree #525 on Rules for Entitlement of Ownership Rights to Lands Possessed (Employed) by Physical and Legal Persons of Private Law and Approval of Ownership Certificate Format

The environmental permitting system in Georgia is regulated by the Law on Environmental Impact Permit, Law on Licenses and Permits, Law on Ecological Assessment, and Law on Licenses and Permits. These laws are described in the section on Relevant and Applicable Permitting Requirements, below.

Law of Georgia on Protection of Environment

This law regulates the legal relationship between the bodies of the state authority and the physical/legal persons regarding environmental protection and use of natural resources on Georgian territory, and defines responsibilities of state institutions. The law gives major principles for environmental management, licensing, standards, EIA, and related issues and describes different aspects of the protection of ecosystems, protected areas, and biodiversity.

Law of Georgia on Natural Resources

The law defines the status of natural resources, describes their use, sets out the types of licenses and rights and obligations of the users. The law sets responsibilities to preserve lands from contamination and ensures conformity of agricultural activities with relevant legal requirements. It describes economic principles for consumption of natural resources.

Law of Georgia on Soil Protection

The law aims at ensuring preservation of soil integrity and improving its fertility. It defines obligations and responsibilities of land users and the state regarding provision of soil protection conditions and ecologically safe production. The law sets the maximum permissible concentrations of hazardous matter in soil. It also restricts the use of fertile soil for non-agricultural purposes; execution of any activity without stripping and preserving topsoil; open quarry processing without subsequent re-vegetation of the site; terracing without preliminary survey of the area and approved design; overgrazing; wood cutting; damage of soil protection facilities; any activity that would degrade soil quality (e.g., unauthorized chemicals/fertilizers, etc.).

Law of Georgia on Protection of Atmospheric Air

The law regulates protection of atmospheric air from adverse anthropogenic impact within the whole Georgian territory (Part I, Chapter I, Article 1.1). Adverse anthropogenic impact is any human-caused effect on atmospheric air causing or capable of causing negative impacts on human health and the environment (Part II, Chapter IV, Article II.I).

Law of Georgia on System of Protected Areas

The law sets out the categories of protected areas (including national parks, state reserves, managed reserves, etc.) and defines activities allowed in their boundaries. Activities may be allowed based on purpose of the area, requirements set out in legislation and individual regulations, management plans of protected areas, as well as international agreements and conventions signed by Georgia. The law provides restrictions of the use of natural resources in national parks and other protected areas.

Law of Georgia on Water

The law regulates protection and consumption of surface and ground water, commercial water production, protection of aquatic life, fauna, flora, forest, land and other natural resources. Consistent with the legislation, water within the territory of Georgia is under state ownership.

Law on Rules for Expropriation of Ownership for Necessary Public Needs

The state has the constitutional power to seize any property by means of expropriation for projects of imminent public necessity. The expropriator has to make every reasonable effort to acquire property by negotiation and is required to value the property in accordance with the fair market value before negotiations.

Law on Replacement Cost Reimbursement and Compensation for the Use of Agricultural Land for Non-Agricultural Purposes

The law specifies requirements for a land replacement fee (based on location and quality of land) to compensate the government and private landowners/ land users for property loss, plus lost profits by the beneficiary as a result of allocation of agricultural land for nonagricultural purposes.

Labor Code of Georgia

The code regulates labor relations between all workers and employees in Georgia. It supports the realization of human rights and freedoms through fair reimbursement and the creation of safe and healthy working conditions.

4.7.2 Relevant and Applicable International Standards and Best Practices

International standards that may apply to the project include the Equator Principles (EP), requiring that the Equator Principle Financial Institutions (EPFIs) ensure that projects financed by them are "developed in a manner that is socially responsible and reflect sound environmental management practices." Other international requirements include environmental and social policies including the following:

- The EBRD's Environmental and Social Policy (2008) and its associated Performance Requirements
- IFC Performance Standards (1- 8)
- World Bank Group Environmental, Health and Safety Guidelines
- Other policies and guidelines of EPFIs
- The Project should also meet ILO core labor standards on:
- Forced labor (C105)
- Child Labor (C182)
- Discrimination (C111)
- Freedom of Association and the Right to Organize (C 87)

- Equal Remuneration (C100)
- Minimum Age (C138)

Georgia is a party to the following environmental conventions and treaties, not all of which will be relevant to the project. The main international convention of interest for this project is the Aarhus Convention:

- Ramsar Convention on Wetlands of International Importance, especially as Waterfowl Habitat
- UN Rio de Janeiro Convention on Biological Diversity
- Convention on Migratory Species
- Paris Convention on the Protection of World Culture and Natural Heritage
- Aarhus Convention on Access to Information, Public Participation in Decision-making and Access to Justice in Environmental Matters
- European Archaeological Heritage Convention
- European Convention on Protection of the Archaeological Heritage (Lavallette, 1992 – 01 – 16) – Georgia joined the convention on February 23, 2000, pursuant to Decree # 158; and
- European Convention on Protection of the Archaeological Heritage (Granada, 1985-10-03) – Georgia joined the convention on February 23, 2000, pursuant to Decree # 157.

4.7.3 Relevant and Applicable Permitting Requirements

In Georgia, projects requiring ecological examination are mainly regulated by the following laws:

Law of Georgia on Environmental Impact Permit

The law gives a complete list of activities subject to ecological examination. The body authorized for execution of ecological examinations is the Ministry of Environment Protection (MOE), which issues the permit after review of the documents and application presented by a project owner. If an activity listed in the law requires a Construction Permit, the permitting administrative body (or the Ministry of Economy and Sustainable Development) ensures the involvement of the MOE in the process so that ecological expertise is included in the review.

Law of Georgia on Ecological Examination

This law makes ecological examination an obligatory step to issue the environmental impact permit or construction permit for certain types of activities. The objective of an ecological assessment is to preserve an ecological balance by considering environmental requirements, sound use of natural resources, and sustainable development principles. A positive conclusion of the ecological examination carried out by the experts committee created by the MOE is necessary to obtain an environmental or construction permit.

Law of Georgia on Licenses and Permits

The law regulates the issuance of licenses or permits, gives an exhaustive list of licenses and permits, and sets the rules for issuing, amending, and cancelling permits. The law defines three principles for issuance of the license:

- "One-window" principle – meaning that a licensing administrative body shall ensure the approval of additional licensing conditions by the other administrative bodies.

- "Silence gives consent" – licensing administrative body is obliged to make a decision in due course after the submission of the application. Otherwise, if a decision is not made in the determined time period the license is deemed issued.
- "Umbrella principle" – the holder of the general license is not obliged to apply for specialized licenses.

The projects covered by this PEA, rehabilitation of IDP cottage settlements and buildings, do not require a State ecological examination. The only environmental permitting requirement is for wastewater discharge. Local level government will be involved in decisions on rehabilitation and improvements.

5. ENVIRONMENTAL CONSEQUENCES

5.1 Environmental Impacts of the Proposed Action and Alternatives

Using environmental review forms (See Appendices 8.3-8.6) that were included in the Scoping Statement, the Scoping Team identified the potential significant environmental impacts to be considered in the PEA. Potential environmental, health, and socio-cultural impacts were identified for the construction/rehabilitation phase and the operation/maintenance phase for both water and sanitation upgrades at cottage settlements and for building rehabilitation projects. This chapter analyzes the significant issues identified by the Scoping Team, as revised by the PEA Team during PEA preparation.

5.1.1 Potable Water Quality Testing (Cottage Settlements)

Water quality testing was conducted at each of the cottage settlements where GMIP support is planned for providing potable water to cottages. The testing was conducted using standard methods during August 2011 for Karaleti and Shavshvebi and during March 2012 for the other settlements. Detailed biological and chemical test results are provided in Appendix 8.10. Biological and chemical test results were compared with the Technical Regulations for Drinking Water approved by the Ministry of Labor, Health and Social Affairs of Georgia, Order No. N349N (December 17, 2007). Settlement comparisons of the test results with standards are provided below in Table 5.1.

Table 5-1: Comparison of Water Quality Test Results with Georgian Drinking Water Standards

Sample №	Description	Conclusion on compliance
1.	Tsilkani - borehole	In line with standard
2.	Khertvisi - borehole	In line with standard
3.	Shavshvebi - borehole	Fails to meet the standard – calcium, nitrate, hardness and microbiological parameters exceed permissible limits
4.	Berbuki – borehole (IDP settlement)	In line with standard
5.	Berbuki –borehole (village)	In line with standard
6.	Skra - borehole	In line with standard
7.	Akhalsopeli – intake 1 (Okrosopeli)	Fails to meet the standard – calcium, sulphate and hardness exceed permissible limits

8.	Akhalsopeli – intake 2 (Jagaraantkari)	Fails to meet the standard – calcium, sulphate, hardness and microbiological parameters exceed permissible limits
9.	Akhalsopeli - borehole	Fails to meet the standard – calcium, magnesium, sulphate, nitrate, hardness and dry residue limits exceed permissible limits
10.	Mokhisi – borehole (Note: because of the poor state of technical maintenance the borehole is out of operation since November 2011)	Fails to meet the standard – iron permanganate oxidability, colour, turbidity and microbiolological parameters exceed permissible limits
11	Karaleti 1 and 2	Fails to meet the standard – microbiological parameters exceed permissible limits

The test results show possible compliance problems at four settlements: Shavshvebi, part of Akhalsopeli, Mokhisi and Karaleti.

For Shavshvebi, test results exceed limits for calcium, nitrate, hardness and microbiological parameters. Calcium and hardness are considered sufficient and they do not imply a health risk. High nitrates are associated with "blue baby syndrome" that affects babies by decreasing the oxygen carrying capacity of hemoglobin. However, there were tests conducted by the same contractor in August 2011 and these tests showed no problems with nitrates (3 mg/l vs. 102 mg/l in the most recent testing). As for microbiological tests, total coliforms exceeded the limit (320 vs. Not Allowed). Since Shavshvebi has UV disinfection of potable water, there should not be microbiological problems at its cottages. There will be additional testing conducted after water supply improvements are completed. (See Table 6-2 EMMP for IDP Cottage Settlements, third mitigation for microorganism testing.)

For Akhalsopeli Settlement, there were three samples collected and tested. There is also another borehole that will be drilled as part of GMIP. The exceedances for calcium, sulphate, hardness and dry residue are considered sufficient and they do not imply a health risk. The high nitrates at the Akhalsopeli borehole are a concern but GMIP intends to use an alternative water supply that does not have high nitrates. The new well is planned in a different location, across the river from the existing wells. As for microbiological testing, total coliforms exceeded the limit (22 vs. Not Allowed). Since Akhalsopeli will install UV disinfection of potable water and conduct testing after water supply improvements, there should not be microbiological problems at its cottages.

Test results for Mokhisi Settlement exceeded the limits for iron, permanganate oxidability, color, turbidity and microbiological parameters. Iron and permanganate oxidability, or the presence of the strong oxidizing agent, manganate (VII), do not imply a health risk. Color and turbidity are an indication of problems with sampling at the borehole. The borehole is out of operation and the sample was collected using a low power pump. With installation of a new pump, these parameters should not be a problem. As for microbiological testing, total coliforms exceeded the limit (280 vs. Not Allowed). Since

Mokhisi will install UV disinfection of potable water and conduct testing after water supply improvements, there should not be microbiological problems at its cottages.

Karaleti Settlement exceeded the limits for microbiological tests. The test at Karaleti 2 (after filter) exceeded the limit for total coliforms (390 vs. Not Allowed). Both Karaleti 1 and 2 (after filter) exceeded the limit for mezophilic aerobes (24/70 vs. 20) and the level of facultative anaerobes at Karaleti 1 was the same as the limit (100 vs. 100). However, no bacteriological contamination was found in samples after UV disinfection. Since Karaleti has UV disinfection of potable water, there should not be microbiological problems at its cottages. There will be additional testing conducted after water supply improvements are completed. (See Table 6-2 EMMP for IDP Cottage Settlements, third mitigation for microorganism testing.)

There will be additional water quality testing after water supply improvements are completed. Based on the results of potable water testing and the water treatment methods used in cottage settlements, cottages will receive good quality water. There will be additional testing at the new Akhasopeli water well as well as water testing at each settlement after GMIP water improvements are completed. If GMIP or MDF inspections find any water quality problems, GMIP and MDF will notify residents about any concerns and implement measures to solve the problem.

5.1.2 Direct Effects and their Significance

Tables 5.2 and 5.3 show the potential significant impacts identified during the scoping process. Through additional consultations and site visits during PEA preparation, the PEA Team confirmed the potential significant impacts, as well as others (noted in the tables) for analysis in the PEA.

The PEA Team also confirmed the Scoping Team's findings of issues considered not significant and therefore, further analysis would not be provided in the PEA for: ecosystems and sensitive habitats; biodiversity; historical and cultural sites; aesthetic values; and air quality (operation phase). Issues considered not significant are the same for cottage settlement improvements and building rehabilitation.

For ease of evaluation, the potential significant impacts have been combined into "impact categories" as shown in the tables; the impact categories are the basis for the evaluation, presented below the tables.

Table 5-2: Potential Significant Impacts for IDP Cottage Settlement Projects

Activities or Endpoints	Significant Concerns Identified During Scoping; as Revised During the PEA Process (PEA Team added those with an asterisk)	Impact Category (PEA Team eliminated those with asterisk from further study)
Geology, Soils and Land Use	1) Contamination of soil by accidental spills (fuels, oil, and other); by disposal of debris and generated wastes; and through storm water run-off 2) Contamination of soils by sewage due to poorly planned and maintained sewage treatment systems*	1) Waste generation during construction/rehabilitation and demobilization could contaminate soil and water. 2) Poorly planned and maintained sewage treatment systems contaminate soil and water and affect human health.
Water	1) Contamination of water by sewage	1) Poorly planned and maintained sewage

Activities or Endpoints	Significant Concerns Identified During Scoping; as Revised During the PEA Process (PEA Team added those with an asterisk)	Impact Category (PEA Team eliminated those with asterisk from further study)
Resources	due to poorly planned and maintained sewage treatment systems* 2) Groundwater infiltration/ contamination due to disposal and/or accidental spill of oil and lubricants and other waste materials 3) Lack of on-site sanitary facilities for construction workers causing pollution to surface and groundwater	treatment systems contaminate soil and water and affect human health. 2) Waste generation during construction/rehabilitation and demobilization could contaminate soil and water. 3) Lack of facilities or use of environmentally unsound sanitation facilities for construction workers could contaminate soil and water.
Socioeconomic Issue	1) Introduction of short-term labor force into the community 2) Disturbance of IDPs due to construction machinery, traffic and/or possible removal activities 3) Employment opportunities in the construction/rehabilitation activities 4) Improvement of livelihoods, including improved standards of living for affected people 5) Ownership issues-transfer of ownership*	1) Construction labor issues could derail support for the project. Alcohol and other socially destructive substances introduced into community by construction crews. 2) Construction activities could temporarily affect the quality of life of IDPs. 3) Construction labor issues could derail support for the project. 4) Positive effect (see indirect impacts) 5) Lack of a clear process and understanding of ownership could derail project support and affect maintenance of the upgraded infrastructure.
Public Health Issues	1) Human health impacts due to poor drinking water quantity or quality.* 2) Human health impacts due to poorly planned and maintained sewage treatment systems.* 3) Human health impacts due to flooding caused by poor drainage.* 4) Potential worker safety impacts due to accidents.	1) Poorly planned and maintained potable water systems impact IDP public health. 2) Poorly planned and maintained sewage treatment systems contaminate soil and water and affect human health. 3) Poorly planned and maintained drainage systems contaminate soil and water and cause flooding affecting public health. 4) Worker safety may be compromised if safeguards are not in place.

Activities or Endpoints	Significant Concerns Identified During Scoping; as Revised During the PEA Process (PEA Team added those with an asterisk)	Impact Category (PEA Team eliminated those with asterisk from further study)
	5) Potential for accidents to the public, including IDPs, during construction* 6) Occupational health and safety concerns due to improper handling and disposal of hazardous wastes at project site (e.g. asbestos) 7) Health and sanitation problems due to inadequate housing and sanitation structures for laborers	5) Public safety may be compromised if safeguards are not in place. 6) Further study during PEA preparation noted that there would be no hazardous waste produced as a result of water/sewage upgrades; there is no asbestos or other hazardous waste generation involved in placement of water and sewage pipes and in constructing on-site treatment.* 7) Lack of facilities or use of environmentally unsound sanitation facilities for construction workers could contaminate soil and water.
Air Quality	1) Generation of dust due to construction equipment; emissions from combustion of fossil fuels by construction equipment; and increase of vehicle traffic emissions during construction	1) Air pollution due to dust and emissions during construction phase
Waste Generation	1) Excess soil from excavation and water from de-watering operations. Disposal of debris and construction wastes. 2) Sanitation facilities at construction sites during construction phase 3) Hazardous waste impact during rehabilitation activities (e.g. asbestos) 4) Contamination from demolition, construction or site demobilization, and site cleanup	1) Waste generation during construction/rehabilitation and demobilization could contaminate soil and water. 2) Lack of facilities or use of environmentally unsound sanitation facilities for construction workers could contaminate soil and water. 3) Further study during PEA preparation noted that there would be no hazardous waste produced as a result of water/sewage upgrades; there is no asbestos or other hazardous waste generation involved in placement of water and sewage pipes and in constructing on-site treatment.* 4) Waste generation during construction/rehabilitation and demobilization could contaminate soil and

Activities or Endpoints	Significant Concerns Identified During Scoping; as Revised During the PEA Process (PEA Team added those with an asterisk)	Impact Category (PEA Team eliminated those with asterisk from further study)
		water.

Table 5-3: Potential Significant Impacts for IDP Building Rehabilitation Projects

Activities or Endpoints	Significant Concerns Identified During Scoping; as Revised During the PEA Process (PEA Team added those with an asterisk)	Impact Category (PEA Team eliminated those with asterisk from further study)
Geology, Soils and Land Use	1) Contamination of soil by accidental spills (fuels, oil and other); and by disposal of debris and generated wastes; and through storm water runoff	1) Waste generation from construction/rehabilitation and demobilization could contaminate soil and water.
Water Resources	1) Groundwater infiltration / contamination due to disposal and/or accidental spill of oil and lubricants and other waste materials 2) Lack of on-site sanitary facilities for construction workers causing pollution to surface and groundwater	1) Waste generation from construction/rehabilitation and demobilization could contaminate soil and water. 2) Lack of facilities or use of environmentally unsound sanitation facilities for construction workers could contaminate soil and water.
Socioeconomic Issues	1) Human relocation issues at collective centers inhabited by IDPs during rehabilitation period 2) Introduction of short-term labor force into the community 3) Employment opportunities in the construction/rehabilitation activities 4) Improvement of livelihoods, including improved standards of living for affected people 5) Ownership issues-transfer of ownership* 6) Disturbance of IDPs	1) Poorly planned and implemented temporary relocation could derail support for the project. 2) Construction labor issues could derail support for the project. Alcohol and other socially destructive substances introduced into community by construction crews. 3) Construction labor issues could derail support for the project 4) Positive effect (see indirect impact discussion) 5) Lack of a clear process and understanding of ownership could derail project support and affect maintenance of the upgraded infrastructure.

Activities or Endpoints	Significant Concerns Identified During Scoping; as Revised During the PEA Process (PEA Team added those with an asterisk)	Impact Category (PEA Team eliminated those with asterisk from further study)
		6) Eliminated since IDPs will be relocated during rehabilitation works. *
Public Health Issues	1) Potential worker safety impacts due to accidents 2) Potential for accidents to the public, including IDPs, during construction.* 3) Occupational Health and Safety concerns due to improper handling and disposal of hazardous wastes at project site (e.g. asbestos) 4) Concerns due to improper cleanup practices and removal/disposal of hospital/medical wastes at project site (e.g. biohazards/infectious agents, asbestos, mold, silver, lead, mercury, PCBs, radioactive wastes). 5) Health and sanitation problems due to inadequate housing and sanitation structures for laborers 6) Improper handling of construction materials	1) Worker safety may be compromised if safeguards are not in place. 2) Public safety may be compromised if safeguards are not in place. 3) Hazardous waste, mainly from removal of material containing asbestos, could affect human health and the environment. 4) Waste from cleanup and removal and disposal of hospital and medical wastes could affect human health and the environment. 5) Lack of facilities or use of environmentally unsound sanitation facilities for construction workers could contaminate soil and water. 6) Worker safety may be compromised if safeguards are not in place.
Air Quality	1) Generation of dust due to construction equipment; emissions from combustion of fossil fuels by construction equipment; and increase of vehicle traffic emissions during construction	1) Air pollution due to dust and emissions during construction phase
Waste Generation	1) Disposal of debris and construction wastes 2) Sanitation facilities at construction sites during construction phase; 3) Hazardous waste impact during rehabilitation activities (e.g. asbestos) 4) Hospital/clinic/medical service building rehabilitation impacts from improper	1) Waste generation during construction/rehabilitation and demobilization could contaminate soil and water. 2) Lack of facilities or use of environmentally unsound sanitation facilities for construction workers could contaminate soil and water. 3) Hazardous waste, mainly from removal

Activities or Endpoints	Significant Concerns Identified During Scoping; as Revised During the PEA Process (PEA Team added those with an asterisk)	Impact Category (PEA Team eliminated those with asterisk from further study)
	cleanup practices and removal/disposal methods (e.g. biohazards/infectious agents, asbestos, mold, silver, lead, mercury, PCBs, radioactive waste). 5) Contamination from demolition, construction site demobilization, and site cleanup. 6) Excess soil from excavation and water from de-watering operations*	of material containing asbestos, could affect human health and the environment. 4) Hospital/medical waste from cleanup and removal and disposal of hospital/medical wastes could affect human health and the environment. 5) Waste generation, including storm water runoff, during construction/rehabilitation and demobilization could contaminate soil and water. 6) Waste generation, including storm water runoff, during construction/rehabilitation and demobilization could contaminate soil and water.

The following are the project phases and their potential environmental and social impacts; below this discussion, based on impact category (from Tables 5.2 and 5.3), an evaluation of environmental consequences is presented.

IDP Cottage Settlements

Construction/Rehabilitation: The construction/rehabilitation phase involves site cleaning, excavation, erection and/or installation of infrastructure, transportation, and material handling. These activities could have several temporary impacts. They will generate waste, dust, and emissions which could negatively impact on soil and water sources and air quality. Construction vehicles will increase the amount of traffic at the settlements. Construction site clearing could result in accumulation of topsoil and water from dewatering. These materials will need proper handling and disposal or reuse during demobilization and site cleanup. Excess soil and liquid generated as part of the construction process may be contaminated with toxic liquids (fuel, oil, etc.) or solid waste.

Inappropriate siting of water, sewer or drainage systems could generate environmental and safety hazards as well as public health concerns. If septic tanks and infiltration drain fields are installed, drainage should be diverted away from drain fields, drain fields should be planted with grass and signs used to keep vehicles off the drain fields. (Driving or parking vehicles compact the soil in the drain fields, reducing sewage treatment and potentially damaging drain pipes.) Prior to demobilization, the area where the pipelines are placed will be returned to their original condition.

Operation and maintenance: After construction is completed, facilities and construction camps will be demobilized and support infrastructure removed potentially impacting soil and water. The impacts can be generated by hazardous and non-hazardous materials (if excess soil or water has been contaminated), construction debris, demobilization of warehouses, sanitary facilities, etc.

Water and sewage treatment plants and drainage systems will require operation and maintenance support. Pipelines will need to be inspected periodically for leaks or blockages, also leaks in water connections inside shower/toilet buildings. Water pumps will need to be inspected and UV lamps may need to be replaced in water disinfection units. Drainage collectors and road-side drainage ditches will need to be cleaned twice per year after construction. Septic tanks will need to be cleaned and the sludge and solids disposed of properly. Infiltration drain fields will need inspection to insure piping is not blocked, wastewater is properly flowing through the soil layers and not ponding. Water quality testing of the potable water will be needed periodically for biological and chemical indicator pollutants (e.g., fecal coliforms, nitrates and COD). These pollutants indicate possible contamination and public health concerns.

IDP Building Rehabilitation Projects

Construction/Rehabilitation: Construction and/or rehabilitation activities include building stripping, trench excavation, backfilling and site restoration including placement of insulation, walls, floors, and plastering. Removal and handling of asbestos, hospital wastes and hazardous construction materials require special attention to ensure that environmental impacts are avoided and/or minimized. Construction vehicles would include trucks hauling construction debris and delivering construction materials and supplies. Since the buildings are in mainly urban areas, construction vehicles may interfere with local traffic. They also could increase pollution of the surrounding environment (e.g. emissions, potential pollution by fuel/oils etc.).

Existing sewage and water pipelines, which are connected to the central system, may need to be replaced. This process could contaminate soil and water with sewage.

During building rehabilitation, IDPs living in buildings selected for reconstructive/rehabilitation activities may be relocated. Distance between relocation and their places of employment of schooling might cause adverse impacts on IDPs.

Operation and maintenance: After construction is completed, facilities and construction camps will be demobilized and support infrastructure removed potentially impacting soil and water. The impacts can be generated by hazardous and non-hazardous materials, construction debris, demobilization of warehouses, sanitary facilities, etc. At the buildings, energy efficient materials and measures will be used, and therefore, operation phase impacts are expected to be positive in regard to energy concerns.

Using the impact categories in Tables 5.2 and 5.3, and the general discussion of potential impacts of each project phase, the section below provides an evaluation of environmental impacts and their significance.

1) Waste generation from construction/rehabilitation and demobilization could contaminate soil and water (construction waste, disposal or spill of oil, lubricants, fuel, other wastes)

GMIP will support potable water system improvements in 8 cottage settlements, inside cottage water connections in 10 settlements, new sewage collection systems and sewage treatment plants in 7 settlements and new drainage pipelines at 6 settlements. In addition, 120 m of damaged sewage pipe will be replaced at Karaleti Settlement and up to 118 buildings will be rehabilitated for new IDP housing. Placing water, sewer or drainage pipelines and constructing water and sewage treatment systems, and rehabilitating buildings (durable housing units) will result in construction waste. This waste may be solid (i.e., excess construction material, packaging, material from demolition activities), liquid (i.e., fuel, oil, lubricants generated either from accidental spills or from normal construction operations), or excess soil removed to place pipes and other infrastructure (hazardous waste is discussed separately). Construction/rehabilitation activities always produce waste material, and if properly handled and

disposed of, waste material would have no adverse environmental effects; however if unsound practices are used, adverse environmental effects can result, as follows:

a) Solid waste, disposed of using unsound practices or left onsite, can contaminate and degrade soil or if disposed of adjacent to or in waters or wetlands can have an effect on hydrology and water quality.
b) Liquid wastes, either released in an accidental spill or generated as part of normal construction practices (from construction machinery or demolition activities) could contaminate soil, groundwater, and surface water.
c) Soil, excavated for drilling or for placing pipe or to rehabilitate buildings, if disposed of in or near a waterway or wetland could affect hydrology of the system and would contribute to sediment load, which could affect aquatic life.
d) Dewatering of sites during construction/drilling/rehabilitation can pollute soil, ground, and surface water, and can result in unmanaged pooling of water, attracting insects, creating health and public safety risks.
e) Storm water runoff can wash pollutants that were excavated during construction or that are temporarily stored on-site into surface waters and can pollute groundwater.

Significance: Mitigation measures are needed to minimize or eliminate the potential adverse impacts of poorly disposed of waste material (See EMMPs in Chapter 6). Mitigation mainly involves proper construction best practices and good maintenance techniques for construction machinery; confinement of waste in a safe place while temporarily stored on-site; and good drainage practices implemented during the construction phase. With mitigation measures, the impacts are not expected to be significant; however identifying secure, environmentally sound, cost-effective (i.e., in the vicinity of the project site) disposal sites for each of the project locations could constrain effectiveness of the mitigation.

2) Poorly planned and maintained potable water systems can impact IDP public health (cottage settlements).

GMIP will be providing potable water system improvements in 8 cottage settlements and inside cottage water connections in ten settlements. Currently, residents may obtain water from family members with piped water, buy water or obtain water from nearby sources that are untested and may be contaminated. While provision of piped water will be a benefit for cottage residents, if the water quantity or quality is inadequate, human health impacts could result.

GMIP will support drilling a new water borehole in Akhasopeli and expanding delivery of potable water to cottages in seven settlements. Water disinfection and new pumping capacity will be supported. Water pipelines will deliver potable water inside each cottage and to new shower and toilet buildings at each cottage. Drilling the new borehole involves pump tests including stress testing (heavy pumping to create a rapid draw-down of water in the well) and sampling and water tests at the beginning and end of the two week pump testing period. Delivering water to the cottages and shower/toilet buildings involve new water connections and leak testing, and water quality and pressure tests. Some maintenance is required after construction. UV lamps will need to be replaced in water disinfection units. Pipelines will need to be inspected periodically for leaks or blockages, also water connections inside shower/toilet buildings, and pumps will need to be inspected to ensure they are operating as designed. Water quality testing of the potable water will be needed periodically for indicator pollutants (fecal coliforms, nitrates and COD) that may show possible problems.

Additional information on water supply specifications for each cottage settlement is available in Appendix 8.10 Parts A-L. There are design notes, maps and schematics and details about water supply improvements.

Significance: A water quality testing and a plan for notifying residents about concerns will ensure that the provision of potable water at cottage settlements is beneficial to the residents. Most of the potential adverse impacts associated with potable water are a result of construction activities (See impact #1, above). Mitigation measures are needed to minimize or eliminate the potential adverse impacts (See EMMPs in Chapter 6), including water quality testing during borehole drilling and periodically for potable water delivered to cottages, inspecting pipelines and water pumps and replacing UV lamps. Report required after construction period identifying entity responsible for water supply O&M, funding source and needs for training and technical assistance. Mitigation included under O&M for implementing measures in this report. Mitigation for borehole drilling mainly involves proper best practices, good maintenance techniques and proper waste management. With mitigation measures, the impacts are not expected to be significant. Benefits from providing adequate quantities of clean water should be a significant positive for settlements.

3) Poorly planned and maintained sewage treatment systems can contaminate soil and water and affect human health (cottage settlements).

GMIP will provide on-site sewage treatment at seven cottage settlements. A variety of disposal and treatment systems are available as described and compared in Section 3. Some require intensive maintenance, some must be maintained by trained individuals, and others require very little maintenance. Some treatment systems will be better accepted based on social and cultural concerns than others. Land constraints may limit the type of treatment used—where there is inadequate disturbed land area, a treatment system that requires a smaller amount of land may be the best choice.

Figure 6.1 provides a Decision Tree to guide selection of the best sewage treatment method at each IDP cottage settlement. The type of treatment installed depends on site-specific conditions. Septic tank with infiltration drain field treatment requires groundwater levels below two meters and permeable soils and sufficient land for the drain field. These treatment systems, which will include separate grey water disposal, provide excellent treatment for cottage settlements. This technology will, however, require some operation and maintenance, including cleaning of septic tanks and proper disposal of sludge and solids. Sewage pipelines will need to be inspected for leaks or blockages, also leaks in water connections inside shower/toilet buildings. Infiltration drain fields will need inspection to insure piping is not blocked, wastewater is properly flowing through the piping network and soil layers and ponding is prevented.

Significance: Most of the potential adverse impacts associated with sewage treatment plants result from construction activities (See impact #1, above), which can be mitigated with best practices, as described in EMMPs in Chapter 6. Sewage treatment systems selected for cottage settlements (Figure 1 Decision Tree) require some operation and maintenance. Mitigations are included to address cleaning of septic tanks, disposal of sludge and solids, inspection of pipelines and shower/toilet water connection, and inspection of infiltration drain field system. Report required after construction period identifying entity responsible for sewage system O&M, funding source and needs for training and technical assistance. Mitigation included under O&M for implementing measures in this report. If properly implemented, impacts associated with sewage treatment should not be significant. Benefits from providing sewage treatment should be a significant positive for settlements.

4) Poorly planned and maintained drainage systems can contaminate soil and water and cause flooding affecting public health (cottage settlements).

GMIP will rehabilitate inadequate drainage in six cottage settlements. Existing drainage collectors and roadside drainage ditches will be cleaned and steel drainage pipelines will be constructed to reduce the threat of flooding. At one settlement (Teliani), sub-surface drainage pipe will be constructed; a bridge over a new drainage collector channel will be constructed in another settlement (Karaleti). Drainage collectors and road-side drainage ditches will need to be cleaned twice per year after construction and IDPs are committed to clean them. Drainage pipelines also need to be inspected periodically for damage and blockage so that flooding impacts are minimized.

Additional information on drainage specifications for each cottage settlement is available in Appendix 8.10 Parts A-L. There are design notes, maps and schematics and details about drainage improvements.

Significance: Most of the potential adverse impacts associated with drainage systems result from construction activities (See impact #1, above), which can be mitigated with best practices, as described in EMMPs in Chapter 6. Mitigations also address the need for cleaning drains and pipeline inspections. If properly implemented, the public health impacts associated with flooding should not significant. Benefits such as the reduced threat of flooding should be a significant positive for settlements.

5) Use of environmentally unsound sanitation facilities or complete lack of facilities for construction workers could contaminate soil and water.

Environmentally unsound disposal of sewage during the construction phase could have impacts beyond construction, which could last long-term. Workers may be on-site for as long as one year (durable housing), while at cottages construction may last up to two to three months. If workers are not provided with environmentally sound sanitation facilities, water and soil could be contaminated. During construction activities, regular monitoring and maintenance will be needed, and during demobilization, sanitary facilities will need special attention to safely dispose of contaminated soil and water.

Significance: Adequate, environmentally sound sanitation facilities for workers; regular monitoring and maintenance, and environmentally sound demobilization will mitigate concerns. With these conditions in place, potential impacts are not significant. (See EMMPs in Chapter 6).

6) Construction labor issues could derail support for the project. Alcohol and socially destructive substances introduced by construction crews could cause community impacts.

During the scoping process, a key concern that IDP communities raised was lack of jobs and the possibility for employment on construction crews. If laborers are brought in from outside the IDP communities, support for the sewage and water system improvements and for rehabilitation of houses could be derailed. An aim of GMIP is to better integrate IDPs into their community, and bringing in outside laborers would work against this aim. Providing employment for local people will help build support for the infrastructure rehabilitation, and will contribute to the aim of GMIP. Employment of outside crews may also introduce alcohol and socially destructive substances into the community. These substances should be prohibited in construction camps.

Significance: Section 5 includes a recommendation on the use of local labor, which is in line with the overall GMIP aim, and therefore, not only highly feasible, but within the scope of the project. This mitigation is practical and feasible, and with this condition, impacts are not expected to be significant. Mitigations are also included to reduce possible community impacts from introduction of alcohol and other socially destructive substances by construction crews.

7) Construction activities could temporarily affect the quality of life of IDPs (cottage settlements).

Noise, traffic, emissions, and other effects of routine construction may be a nuisance for IDPs at cottage settlements (IDPs at durable housing units will be relocated). During scoping meetings, community

members did not raise these concerns, however, the PEA Team determined that adverse impacts on quality of life due to routine construction operations could result. Especially for individuals who are ill and for students who need to study, noise may be problematic. If construction vehicles are unsafe, accidents could occur (see 8, below).

Significance: These potential impacts can be mitigated easily with safeguards. Mitigation is expected to sufficiently minimize the impacts.

8) Lack of a clear process and understanding of ownership could derail project support and affect maintenance of the upgraded infrastructure.

For both cottages and IDP buildings, ownership may not be entirely clear. In some cases, the GoG owns the infrastructure, and in other cases, they are privately owned (this may be the case for buildings only, not settlements). The intention is that the GoG will purchase any privately owned buildings. However, another issue is IDP ownership of their individual apartments and cottages. In addition, ownership of the sewage treatment facilities at cottages will need to be established. Unless ownership, and the benefits and responsibilities that go with ownership, is well-established, the project may not achieve its aims. At the IDP buildings, if IDPs do not have clear ownership rights, IDPS may refuse temporary relocation—they may not understand the terms and conditions of temporary relocation and final assignment of rehabilitated housing. At cottages, the sewage and water upgrades will need to be serviced, and if IDPs do not have ownership, infrastructure is less likely to be maintained. Establishing ownership will be important for political and socio-cultural reasons, and also for sustainability of the repaired infrastructure.

Significance: With clear ownership established of infrastructure (mitigation), impacts are not expected to result.

9) Worker safety may be compromised if safeguards are not in place.

During construction, without common safeguards, construction accidents are likely to result.

Significance: Good practices, such as implementing safety precautions and providing regular training for construction workers will ensure that impacts are not significant.

10) Public safety may be compromised if safeguards are not in place.

As above, without safeguards, the public will be at risk and accidents are likely to occur. Good practices can minimize these concerns.

Significance: Safety precautions will need to be in place at all rehabilitation/construction locations, from start-up through demobilization. These common, good practices will ensure that impacts to the public will not be significant.

11) Air pollution due to dust and emissions during construction phase

During the construction phase, movement of soil will create dust, and use of heavy machinery will result in diesel and other fairly toxic emissions. Especially for individuals who are ill or have allergies, these particulates can be not only annoying, but dangerous. However, dust and emissions can be controlled with good practices (See EMMPs in Chapter 6).

Significance: Standard best practices will ensure effects are not significant.

12) Poorly planned and implemented temporary relocation could derail support for the project (IDP buildings).

IDPs in the occupied durable housing units will be relocated during construction—it will be impossible and dangerous to remain in the buildings during renovations. If temporary relocations are implemented without good and regular communication, and without adequate provision for quality of life issues, IDPs will not only fail to support the rehabilitation, but the larger Georgian community (NGOs, politicians, etc.) may fail to support it, and may actively work against the project. Mitigations are included in EMMPs in Chapter 6.

Significance: If relocation is not implemented in a transparent manner, the impacts could be significant. Mitigation, in the form of a Temporary Relocation Plan with regular and inclusive communication, will offset any adverse impacts. So as to be the least disruptive, the Resettlement Plan will need to consider places of employment and location of schools in relation to the resettlement location.

13) Hazardous waste, mainly from removal of material containing asbestos, could affect human health and the environment.

Asbestos is a concern during demolition; the asbestos fibers are disturbed and can cause pulmonary problems. This is especially a concern to the workers, and is a concern only at the IDP buildings. There is considerable information on asbestos impacts and mitigation measures for those who work with asbestos. Without safeguards, human health impacts would be expected, however, implementation of best practices will ensure that human health is not put at risk. The disposal location is also of concern, and material such as asbestos (and other potentially hazardous material as well), needs to be disposed of at a secure location, mainly protected from landfill scavengers.

Significance: Impacts to human health can be mitigated and adverse effects are not expected if best practices are followed. The main constraint is that personal protective equipment must be onsite, maintained, and used, and workers must be trained in how to use and maintain the equipment. Workers must be aware of the potential impacts to their health if they fail to implement the safeguards. The location of asbestos disposal (and other hazardous wastes) must be secure and environmentally sound.

14) Hospital and medical waste from cleanup and removal/disposal of wastes could affect human health and the environment.

Hospital and medical wastes are a concern during rehabilitation of old hospitals, clinics and medical service buildings for IDP housing. There are concerns about existing wastes (i.e. generation of medical waste during the operation of the old hospital/clinic) as well as new wastes generated during the rehabilitation and cleanup of the medical buildings for IDP housing. There are concerns in the hospital/medical building as well as on the site immediately surrounding the old hospital/medical building. There may also be concerns with additional buildings for power generation and boilers, maintenance facilities and medical waste storage and disposal sites.

The GoG has provided assurances that these buildings are safe and inspections have not identified waste piles, stored medical waste or onsite waste dump sites. (See Environmental Inspection Site Visit Report -- Appendix 8.7.) Still, during building rehabilitation, there is a potential for chance-finds of biohazards from sources such as old medical equipment, medical by-products and hospital/clinic treatment residues. Construction/rehabilitation activities at hospitals/clinics may find typical medical waste materials (e.g. syringes and needles, monitors and feeding tubes, blood, thermometers, pharmaceuticals, batteries and old chemicals) as well as generate special cleanup wastes such as lead paint, mold and asbestos. If properly handled and disposed of, these hospital/clinic medical wastes would have no adverse effects; however, if unsound practices are used, potential human health and/or environmental impacts are

possible. Possible concerns with chance-finds of biohazards during rehabilitation of old hospitals, clinics and medical service buildings for IDP housing include:

a) Silver and other heavy metals may be in hospital/medical wastes associated with radiographs and other hospital imaging techniques.
b) Radioactive waste from former hospital X-ray facilities may have contaminated other hospital/medical wastes.
c) Wastes containing infectious agents (bacteria, viruses, parasites, fungi, etc.).
d) Hospital/medical waste may contain mercury from fluorescent lamps, thermometers, blood pressure monitors, dialators, feeding tubes and other hospital sources.
e) Hospital/medical wastes may contain old cleaning solutions and/or laboratory waste containing hazardous chemicals.
f) Hospital, clinic or medical service building walls may contain multiple layers of lead-based paint that will generate lead dust and lead cleanup waste during removal.
g) Hospital/medical wastes may contain old batteries containing lead and other hazardous chemicals requiring special treatment and disposal methods.
h) Mold from wet basements and leaking roofs may have caused building contamination that is associated with biohazards during remediation, mold removal and cleanup waste.
i) Old power stations in hospital/medical service buildings and the fuels used for power generation. Old transformers may contain PCBs including leaking PCBs. If underground storage tanks were used for storing fuels, there may be leaking fuels into groundwater.
j) Hospitals, clinics and medical service buildings may use asbestos roofing and asbestos insulation materials that need to be removed, transported and disposed of.

Many of these concerns are focused on worker exposure during hospital/clinic building rehabilitation. There is considerable information on lead and mercury impacts, biohazards and medical waste impacts and mitigation measures. Without safeguards, human health and environmental impacts would be expected; however, implementation of best practices will ensure that human health and the environment are not put at risk. The waste disposal location is also of concern, and wastes containing silver or mercury or other potentially hazardous materials need to be disposed in a secure location, protected from landfill scavengers.

Hospitals, like all housing solutions, are options and IDPs will not be forced to relocate into a hospital or medical service building. IDPs can select other housing options per MRA's operating guidelines. Also, hospitals under lease will have their leases expire within six months and GMIP is working with the GoG to reduce this time period. While MRA will make the final determination of buildings for rehabilitation, GMIP is in consultation with MRA in selection of housing options to help insure that a sufficient number of potential residents warrant rehabilitating each building.

Significance: Impacts to human health and the environment from rehabilitation of hospitals, clinics and medical service buildings for IDP housing can be mitigated and adverse effects are not expected if best practices are followed. Hospital/clinic mitigations include measures developed for building rehabilitation (Table 6.1 EMMP) and measures for chance-finds of medical biohazards (Table 6.4 EMMP). If asbestos is present, mitigations in the Table 6.3 EMMP apply. One of the main constraints is that personal protective equipment must be present onsite, well maintained, and diligently used, and workers must be trained in how to use and maintain the equipment. Workers must be aware of the potential impacts to their health if they fail to implement the safeguards. The location of disposal sites for hospital/medical wastes must be secure and environmentally sound.

5.1.3 Indirect Effects and their Significance

The scoping process identified a positive effect of the proposed upgrades and rehabilitation: *Improvement of livelihoods, including improved standards of living for affected people*. This direct benefit could have indirect adverse effects. IDPs who do not benefit from the GMIP interventions may demand to get similar services. The GoG (Ministry of IDPs) will need to contend with these demands; it is out of GMIP's control and outside the project's scope to provide infrastructure improvements beyond the current proposed program.
In addition, non-IDPs may see that IDPs' standards of living have improved while they have gotten no benefits from the program. They may also demand services from the GoG; this is also out of the scope of GMIP.

Significance: The indirect effects are not significant and are outside the scope of GMIP's control and outside the project's scope to mitigate.

5.1.4 Cumulative Effects and their Significance

Cumulative impact is defined by the US Council on Environmental Quality as:

…the impact on the environment which results from the incremental impact of the action when added to other past, present, and reasonably foreseeable future actions regardless of what agency or person undertakes such other actions. Cumulative impacts can result from individually minor but collectively significant actions taking place over a period of time (40 CFR 1508.7).

At the project sites, there are very few past or present actions—most of the areas have limited development. However, the GMIP rehabilitation activities could affect future actions. Based on the definition above, cumulative impacts of concern are the following:

1) Improvements at cottage settlements may encourage additional private sector investment such as shops and other services. This may be expected because once improvements are made, the cottages will be seen as a permanent residence, and investments in the area may become more attractive. As described in Chapter 4, these settlements are in already built up areas, and there is little—if any---natural environment in the vicinity of the settlements. Construction and operation of shops and other small-scale facilities that would be expected to serve these communities are not expected to have a significant environmental effect. Industry may also find it attractive to locate in these areas. However, new construction and industrial development will require review by the Ministry of Environment whose role it is to ensure that significant environmental effects are mitigated. The PEA Team is not aware of any planned construction or other projects in the areas of the settlements.

2) Rehabilitation of IDP houses may have similar cumulative impact concerns, however, because IDP houses are in urban/peri-urban areas, the immediate vicinity already has most services, and it is unlikely that rehabilitation will attract additional construction. Industry, as above, may decide to locate to these areas. The PEA Team is not aware of any planned construction or other projects in the areas of the durable housing units.

5.1.5 Area of Land Disturbance

Most of the land adjacent to the cottage settlements is disturbed land, and there is little—if any—natural habitat at any of the cottage settlements. Most of the land is backyard-residential plots with grasses and cultivated flowers, vacant land which is disturbed and usually scrub-shrub, or agriculture plots. In some cases, watercourses or wetlands may exist on-site, but these can be easily avoided when placing pipes

and in construction of treatment systems. In rare cases, there may be pockets of natural vegetation at the sites. Mitigation measures are included in Chapter 6 to ensure there will be no significant impacts to natural vegetation, wetlands and surface waters.

For placement of pipes at cottage settlements, the area disturbed will be the area where sewer and water pipelines are placed and a small area running adjacent to the pipeline, where dirt will be excavated and temporarily stored until it is backfilled over the pipeline. The pipeline location will be returned to previous state, so there is no long-term land use changes or land disturbance. The pipelines run through the backyards of the cottages, and to the treatment system.

The locations of the treatment systems have not yet been identified. Treatment systems will be built down gradient of the settlements, and will be as close to the settlements as feasible. The location of the treatment system infrastructure will be the only permanent land disturbance for the cottage settlement improvements. Given the lack of natural habitat and disturbed nature of the environment, this concern is not significant, and adverse impacts to environmental attributes are not expected. In addition, if the presence of already disturbed land is a constraint, the Decision Tree in Chapter 6 shows that land availability will be considered in selecting the appropriate sewage treatment alternative.

The IDP collective center housing is located in urban and peri-urban areas, and there is no natural habitat or other important environmental resources. Rehabilitation will be within the original footprint of the building; no additional permanent land disturbance will occur. There may be land disturbance beyond the building footprint, during construction activities, where supplies and equipment and where material from demolition will be temporarily placed. While the areas adjacent to the buildings are highly disturbed, there may be land off-site that could have natural vegetation and should not be disturbed during construction. Mitigation to ensure that no areas of environmental importance are disturbed during construction is included in EMMPs in Chapter 6.

5.1.6 Endangered, Threatened, or Protected Species and their Habitats

As stated in the Scoping Statement, the existence of protected species at any of the sites—cottage settlements and IDP houses—is highly unlikely. There is no critical habitat, and no endangered, threatened, or otherwise protected species are expected to use any of these sites for feeding, nesting, resting, or any other purpose. No mitigation is necessary.

5.1.7 Wetland Impacts

Visits by the Scoping Team, the PEA Team, and teams conducting feasibility studies have not indicated the presence of wetlands at cottage settlements or near IDP houses. However, seasonal wetlands may be present, and may not have been documented by the teams. Given the nature of the activities at the cottage and IDP houses, where there may be wetlands, avoidance of wetland impacts is highly feasible, and is included as a mitigation measure in Chapter 6.

5.1.8 Biodiversity Losses

As stated in the Scoping Statement and as described in Chapter 2, Affected Environment, the cottage settlements and IDP housing sites contain no biodiversity resources of global, regional, or local significance. No mitigation is necessary.

5.1.9 Possible Conflicts between Proposed Action and Land Use Plans

Cottage settlements and IDP housing already exist and therefore, they are expected to conform to land use plans. GMIP will coordinate with local authorities, who will review the plans for water and sewer upgrades and for rehabilitation once they are available, and appropriate local government permits (described in Chapter 4) will be obtained to ensure there are no conflicts with land use plans and other local concerns.

5.1.10 Possible Conflicts between Proposed Action and Policies and Controls

As above, GMIP will coordinate with local authorities to ensure that the upgrades and rehabilitation comply with local concerns such as zoning, water use, agricultural land conversion, and others (see Chapter 4 for local government requirements).

5.1.11 Energy Requirements and Conservation Potential of Alternatives and Mitigations

Energy requirements of the alternatives (no action, voucher/cash transfers) and the proposed action are about the same for cottage settlements and the energy requirements of the alternatives are similar for IDP housing.

Cottage settlements are currently occupied, the number of residents is not expected to increase, and the energy requirements are expected to remain about the same as current requirements (no action). Upgrades to water pumping systems will increase energy requirements but selection of septic tanks and on-site infiltration drain field treatment requires no pumping or energy requirements. Under the voucher or cash transfer alternative, energy and water requirements would be the same as under the proposed action alternative if settlements investing in new water pumping capacity. Energy usage under the no action alternative would be slightly lower because there would be no increase in water pumping capacity.

At IDP housing, not all apartments are currently occupied, and once renovated, additional residents will move in. Energy needs would increase under the proposed action alternative in relation to the no action alternative. However, the energy used for each apartment is relatively small and the net change in energy need is zero since the future occupants are currently using energy at a different location (their current residence). However, in accordance with the governing IEE, GMIP will implement mitigation to ensure that all construction and infrastructure activities make use of energy efficient standards and materials; and make use of water conservation and recycling measures. Therefore, since energy efficient measures will be used in the buildings, there may be a slight positive effect under alternative 1 as opposed to alternative 2 and the no action alternative. The project will work through appropriate GoG officials to help ensure adequate energy and water connections and future supply

Natural or Depletable Resource Requirements

The construction/rehabilitation activities will not use natural or depletable resources to a significant degree. Construction material will be sourced locally, when practicable, and will be good quality, standard construction material. As above, recycled substances will be used when practicable.

5.1.12 Urban Quality

The IDP housing is in peri-urban or urban areas, and the rehabilitation will improve the quality of the urban environment. Currently, the IDP durable housing units are in a dilapidated state, and contribute to urban blight. The renovations will improve the aesthetics of the general area, and indirectly, may

encourage residents and other community members to take better care of the environment and their property.

5.1.13 Historic and Cultural Resources

As stated in the Scoping Statement, there are no cultural or historical resources at the cottage settlement or IDP housing sites. No mitigation measures are necessary.

5.1.14 Design of the Built Environment including Reuse and Conservation Potential

The proposed action will include the mitigation measures in the PEA, and will require construction based on high standards/best practices. Cash transfers/voucher system alternative would involve more haphazard development at the cottage settlements and IDP housing. The cash transfer/voucher alternative would probably result in on-site disposal of trash and would not include safe handling of asbestos or hospital/medical wastes (IDP housing). Sewage disposal and treatment (cottage settlements) would likely be provided at a less stringent standard (although in compliance with GoG requirements), or may not be provided at all.

The no action alternative at the cottage settlements results in continued use of poorly operating and maintained outhouses that can contaminate land and groundwater. Conservation potential of the proposed action is greater than for either of the alternatives.

6. ENVIRONMENTAL MITIGATION AND MONITORING PLANS

This chapter includes EMMPs for IDP Building Rehabilitation and IDP Cottage Settlements. The EMMP for Building Rehabilitation also covers hospitals, clinics and medical service buildings. Two additional EMMPs also apply to building rehabilitation: EMMP for buildings with asbestos remediation including asbestos-tiled roofing, asbestos corrugated sheets and other asbestos materials; and EMMP for chance-finds of biohazards at hospitals, clinics and medical service buildings rehabilitated for IDP housing. The EMMP for IDP Cottage Settlements includes a Decision Tree (Figure 6.1) for selection of the best sewage treatment method for IDP cottage settlements.

6.1 Environmental Mitigation Plans

Environmental Mitigation and Monitoring Plans (EMMPs) include mitigation measures (including best practices) to minimize the potential social and environmental impacts. The mitigation measures are practical and feasible, and they are expected to adequately minimize potential impacts. EMMPs cover rehabilitation/construction and operation/maintenance and include the identified environmental impacts, individual mitigation measures, monitoring indicators, monitoring/reporting frequency and responsible party for oversight of EMMP implementation.

Table 6.1 includes the EMMP for IDP Building Rehabilitation and Table 6.2 is the EMMP for IDP Cottage Settlements. In both EMMPs, the potential significant human health and environmental impacts are identified for each activity and mitigation measures are provided to minimize impacts. Both tables cover construction/rehabilitation activities and building or cottage operations, including mitigations to correct construction problems and impacts during the "Defects Liability" period that extends for one year after construction.

Building mitigations during the defects liability period cover building integrity problems (roofing, outside topcoats, insulation, windows, doors, walls, ceilings, floors, electric boxes/outlets), delivery of electricity, gas and water plus sewer services including toilets and inside plumbing, lighting, exterior parking and access roads.

Hospitals/clinics are covered by mitigations for building rehabilitation (Table 6.1) and mitigations for chance-finds of biohazards (Table 6.4). Hospitals, like all housing solutions, are options and IDPs will not be forced to relocate into a hospital or medical service building. IDPs can select other housing options per MRA's operating guidelines. Table 6.4 mitigations involve identification, pretreatment, cleanup and removal and transport/disposal of chance-find biohazards/infectious agents, mold, silver, lead, mercury, PCBs and radioactive wastes. If asbestos is present, Table 6.3 includes mitigations for environmental impacts involving preparation for asbestos removal, asbestos contamination during removal, disposal, socioeconomic impacts and public health and safety impacts. The EMMPs include monitoring indicators to determine the success of mitigation measures, and reporting requirements.

Mitigations associated with cottage settlements during the construction/rehabilitation phase cover best practices for construction activities, proper design and maintenance for potable water systems, sewage collection and treatment and drainage systems. Mitigations also cover construction camps, noise and visual impacts, socioeconomic impacts and public health and safety. Mitigations during the defects liability period include quantity and quality of water and sanitation at cottages, building construction integrity including foundation, walls and roofing, water, sewer and drainage pipeline problems such as plugging or erosion, water and sanitation problems at "tail enders", and proper O&M at the potable water systems, sewage collection and treatment plants (e.g., monitoring flow, efficiency of operation, cleaning and maintenance, experience with upsets) and drainage systems.

Figure 6.1 describes the Decision Tree for selection of the best sewage treatment method for IDP cottage settlements. The technologies are septic tanks with infiltration drain fields, oxidation ponds, aerated lagoons, latrines, and activated sludge sewage treatment system. A set of criteria including the types of soil and soil percolation rates, level of the groundwater tables, amounts of land available and acceptability to IDPs guides the selection of sewage treatment method. Cottage settlements provided showers and flush toilets will receive appropriate sewage treatment such as septic tank and infiltration drain field treatment.

6.2 Environmental Monitoring Plans

Table 6.1, Table 6.2, Table 6.3 and Table 6.4 provide the monitoring indicator(s), monitoring and reporting frequency and GMIP party responsible for monitoring. Monitoring is provided to ensure the effectiveness of mitigation measures. In Table 6-2, reports are required for water supply and sewage system O&M. These reports identify the entity responsible for O&M, their funding source(s) and training and technical assistance needs. Mitigations are included under the operations part of Table 6.2 for implementation of recommendations in these reports.

Most mitigation and monitoring measures will be included in the GMIP implementation contracts issued by the GoG MDF. MDF and GMIP will both monitor implementation of the mitigation measures to ensure they are effective for reducing or eliminating the environmental impacts.

Table 6-1: Environmental Mitigation and Monitoring Plan for IDP Buildings (including hospitals, clinics and medical service buildings)

Activity	Identified Environmental Impacts	Are Impacts Potentially Significant?	Mitigation Measure(s)	Monitoring Indicator(s)	Monitoring and Reporting Frequency	Responsible Party(ies)
1) IDP Building Rehabilitation (including hospitals/clinics)	Waste Management from Construction Rehabilitation and Demobilization (Soil and Water Contamination)	Y	Collect/segregate construction waste, reuse or recycle as possible: wood and metal, simple/complex compositions, copper wiring/piping, windows, doors, flooring, wallboard, ductwork, lighting, electrical and heating equipment, vents and fans Store materials onsite, protect from storm water runoff or wind until transport for disposal according to local regulations (in landfills). Proper management of hazardous waste (solvents, adhesives, paint, PCBs, mercury lighting). Store safely (cover) until proper disposal. Prevent leaks, spills or local scavenging. If asbestos roofing or other asbestos material present, see Asbestos EMMP.	Types of waste and waste quantity (kg (m3)) Number of Inspections Complaints from nearby residents	Monthly during construction phase; once during de-mobilization	Requirements specified in contracts Inspections by MDF and GMIP.

Activity	Identified Environmental Impacts	Are Impacts Potentially Significant?	Mitigation Measure(s)	Monitoring Indicator(s)	Monitoring and Reporting Frequency	Responsible Party(ies)
	Air Pollution Impacts Energy Efficiency	Y	Use water sprays, covers and containment to control dust and air emissions during construction. Use low emissions and energy efficient windows and building materials, high efficiency lighting, low emission burners in boilers, exterior insulation with plaster topcoat. Prevent burning, minimize visible smoke/emissions Use environmentally acceptable fuels (natural gas if available) for heating equipment.	Concentration of relevant pollutants (mg/m3) Document using energy efficient products. Complaints from nearby residents	Monthly during construction	Requirements specified in contracts Inspections by MDF and GMIP
	Lack of environmentally sound facilities or poor sanitation at construction camp	Y	Provide sound temporary sanitation facilities (e.g., dry toilets or pit latrines, cleanup of food services, trash/waste collection bins Provide off-site housing for workers Use minimum camp size	Camp inspections Complaints from nearby residents	Monthly during construction	Requirements specified in contracts Inspections by MDF and GMIP

Activity	Identified Environmental Impacts	Are Impacts Potentially Significant?	Mitigation Measure(s)	Monitoring Indicator(s)	Monitoring and Reporting Frequency	Responsible Party(ies)
	Noise, Odor and Visual Quality Impacts	Y	Schedule trucks carrying waste/building materials at a time during the day that will minimize impacts to local communities. Minimize use of heavy equipment during early morning or nights	Visual Complaints from users and nearby residents.	Monthly during construction	Requirements specified in contracts inspections by MDF and GMIP
	Socio-economic Impacts	Y	Hire local workers, when possible Develop ownership plan, communicate to IDPs Develop resettlement plan, communicate to IDPs Develop plan to pay for needed O&M services, communicate to IDPs Community public meetings to share mitigation information.	Number of local workers IDP plans developed and communicated Number of public meetings.	One time during construction phase (local workers) Once when Ownership, Resettlement, and O & M plans are complete; When community meetings are held.	Requirements specified in contracts

Activity	Identified Environmental Impacts	Are Impacts Potentially Significant?	Mitigation Measure(s)	Monitoring Indicator(s)	Monitoring and Reporting Frequency	Responsible Party(ies)
	Public Health and Safety Impacts	Y	Written safety procedures. Provide workers with protective equipment (e.g., gloves, boots, eyewear). Adopt fire precautions Manage construction traffic to protect children and the community. Signs clearly displayed Protect public from stored waste/building materials or abandoned structures	Number of Inspections Number of accidents and injuries. Complaints from nearby residents	Quarterly	Requirements specified in contracts Periodic inspections by MDF and GMIP
2) IDP Building Operations After Rehabilitation (During 1 year of "Defects Liability") (including hospitals/clinics)	Impacts Include: Water and Soil Contamination, Air Pollution, Wastes Generation, Energy Inefficiency, Noise, Odor or Visual, Socioeconomic Impacts, Public Health and Safety	Y	Use "Defects Liability" to correct building integrity defects involving roofing outside topcoats, insulation, windows, inside/outside doors, walls, ceilings, floors, electric boxes/outlets, lighting Correct defects with delivery of electricity, gas and water plus sewer services including toilets and inside plumbing	Number of defects corrected Number of inspections Number of complaints	Quarterly for defects liability 1 year period	Requirements specified in contracts Inspections by MDF and GMIP

Activity	Identified Environmental Impacts	Are Impacts Potentially Significant?	Mitigation Measure(s)	Monitoring Indicator(s)	Monitoring and Reporting Frequency	Responsible Party(ies)
			Correct defects with exterior environment including parking and access roads			

Table 6-2: Environmental Mitigation and Monitoring Plan for IDP Cottage Settlements

Activity	Identified Environmental Impacts	Are Impacts Potentially Significant?	Mitigation Measure(s)	Monitoring Indicator(s)	Monitoring and Reporting Frequency	Responsible Party(ies)
1) Provide Water and Sanitation Upgrades for IDP Cottage Settlements	Poorly planned and constructed potable water systems (IDP public health impacts)	N	• During borehole drilling, reuse excavated soil in or near well site. Reuse top soil layer. Properly dispose of drilling fluids. • New borehole testing (pump test & stress test) ensure delivery of adequate quantities of clean water to cottages. • Install UV disinfection for potable water and monitor for microorganisms before and after disinfection unit. • Efficient, low-water-use showerheads/toilets installed. No leaks. • Identify entity responsible for O&M of water supply systems, funding sources and need for training and technical assistance • Provide IDPs with guides on using showers/toilets (routine maintenance), and protections during cold (freezing) weather. • Establish and maintain documented procedures and provide regular worker training on construction inspection and minimizing impacts on local habitats • Use signs and training to	Conformance with design standards Quantity of water (m3), quality of clean water, indicators such as fecal coliforms nitrates and COD Number of guides provided to IDPs Number of workers trained Complaints *from users* Photo log	Inspections at the start of the activity and at least monthly thereafter during construction Report at end of construction with mitigation for watersupply O&M activities, including entity to do O&M, funding source, training and assistance need	Requirements specified in contracts Periodic inspections by MDF and GMIP.

Activity	Identified Environmental Impacts	Are Impacts Potentially Significant?	Mitigation Measure(s)	Monitoring Indicator(s)	Monitoring and Reporting Frequency	Responsible Party(ies)
			encourage IDPs to conserve potable water, not use potable water for garden irrigation.			
	Poorly planned and constructed sewage treatment plants (soil and water contamination and human health effects)	N	• Using Decision Tree, install appropriate sewage treatment in cottage settlements (including cottage septic tanks if selected). • If septic tanks selected, provide IDPs guides on showers/toilets, what not to flush in toilets, routine maintenance, how to fix blockages. • Provide separate grey water disposal • For infiltration drain fields, ensure sewage flows throughout entire soil network-no ponding • Identify entity responsible for sewage system O&M, funding sources and need for training and technical assistance • Arrange with municipal or other septage hauler to clean septic tanks and dispose of sludge/solids Establish timetable. • Other sewage treatment: provide "use-guidelines" on plant operation and routine maintenance.	Conformance with design standards Number of sewage treatment systems installed Cubic meters of sewage treated Number of agreements with septage haulers to clean septic tanks Number of workers trained Complaints from users and nearby residents. Photo log	Inspections at the start of the activity and at least monthly thereafter during construction Report at end of construction with mitigation for sewage system O&M, including entity to do O&M, funding source, training and assistance need	Requirements specified in contracts Periodic inspections by MDF and GMIP.

Activity	Identified Environmental Impacts	Are Impacts Potentially Significant?	Mitigation Measure(s)	Monitoring Indicator(s)	Monitoring and Reporting Frequency	Responsible Party(ies)
			• Provide maintenance equipment for removing sewer pipeline blockage, leak detection, etc. • Provide operating guide for infiltration drain field during cold (freezing) and very wet weather. • Establish and maintain documented procedures and provide regular worker training on construction inspection and minimizing impacts on local habitats • Use signs and educational materials to keep IDP children from playing in drain fields.			
	Poorly planned and constructed drainage systems (soil and water contamination and flooding affecting public health).	N	• Form committee with local IDPs to mitigate negative impacts • IDPs do initial cleanup of drainage collectors and road-side ditches • Installation of drainage system using aggregate, gravel, cement from licensed quarries and suppliers/factories. • Establish and maintain documented procedures and provide regular worker training on construction inspection and minimizing impacts on local habitats	Conformance with design standards Number of IDPs participating in initial cleanup of drainage systems Number of workers trained Complaints from nearby resident Photo log	Inspections at the start of the activity and at least monthly thereafter during construction	Requirements specified in contracts Periodic inspections by MDF and GMIP.

Activity	Identified Environmental Impacts	Are Impacts Potentially Significant?	Mitigation Measure(s)	Monitoring Indicator(s)	Monitoring and Reporting Frequency	Responsible Party(ies)
	Waste generation from constructing pipelines and water/sewage treatment plants (water and soil contamination).	N	• Excavate soils and store next to site for reuse as backfill in ditches. Keep construction material and soils out of streams, waters and wetlands. • Protect area next to construction site. Use lines to mark site. • Minimize storm water runoff and soil erosion. Grade sites, use filters, retention ponds, hay bales, physical barriers. • Provide dust controls. • Design activity to keep natural and existing surface water flow patterns. • Minimize stream/water diversions and avoid open drains. • Restore site through replanting, reseeding. • Establish and maintain documented procedures and provide regular worker training on construction inspection and minimizing impacts on local habitats	Conformance with design standards Number of construction permits obtain (if applicable) Number of inspections of construction sites Complaints from users and nearby residents Photo log	Inspections at the start of the activity and at least monthly thereafter during construction	Requirements specified in contracts Periodic inspections by MDF and GMIP.
	Impacts from lack of environmentally sound facilities or poor sanitation at construction camps (soil and water contamination)	N	• Choose or develop design standards for construction camps • Provide sound temporary sanitation facility • ties (e.g., dry toilets or pit	Conformance with design standards Complaints from nearby residents	Inspections at the start of the activity and at least monthly thereafter during	Requirements specified in contracts Inspections by

Activity	Identified Environmental Impacts	Are Impacts Potentially Significant?	Mitigation Measure(s)	Monitoring Indicator(s)	Monitoring and Reporting Frequency	Responsible Party(ies)
			latrines, cleanup of food services, trash/waste collection bins) • Provide off-site housing for workers • Use minimum camp size • Remove and restore site after construction is completed. • Provide worker training on minimizing impacts on local habitats	Photo log	construction	MDF and GMIP
	Community impacts from introduction of alcohol and other socially destructive substances via construction crews.	N	• Use local workers • Prohibit alcohol and socially destructive substances in construction camps • Use local or regional labor if possible • Install signs and reminders that alcohol/substances are prohibited	Camp inspections Complaints from nearly residents	Monthly during construction	Requirements specified in contracts Inspections by MDF and GMIP
	Impacts from lack of management of construction areas, equipment and materials storage areas (soil and water contamination)	N	• Develop mobilization and demobilization plan • Install fence and signs • Set protocols for storage of materials and wastes • Set protocols for equipment storage and maintenance • Limit onsite equipment maintenance, require most maintenance offsite • Store fuels and lubricants in safe place, provide spill protection, emergency response procedures	Conform with mobilization & demobilization plans, fuels and lubricant storage and waste management protocols Inspection of shipping manifests, landfill receipts	Inspections at the start of the activity and at least monthly thereafter during construction	Requirements specified in contracts Inspections by MDF and GMIP

Activity	Identified Environmental Impacts	Are Impacts Potentially Significant?	Mitigation Measure(s)	Monitoring Indicator(s)	Monitoring and Reporting Frequency	Responsible Party(ies)
			• Prevent dumping of hazardous materials • Prevent dumping of other non-construction waste • Remove and restore site after construction is completed	Complaints from nearby residents Photo log		
	Air pollution from construction activity	N	• Use water sprays, covers and containment to control dust and air emissions during construction. • Prevent burning, minimize visible smoke/emissions • Use environmentally acceptable fuels (natural gas if available) for equipment.	Visual inspections Complaints from nearby residents	Monthly during construction	Requirements specified in contracts Inspections by MDF and GMIP
	Noise, odor and visual quality impacts	N	• Schedule trucks carrying construction materials at times during the day to minimize impacts to local communities. • Minimize use of heavy equipment during early morning or nights	Visual inspections Complaints from nearby residents.	Monthly during construction	Requirements specified in contracts Inspections by MDF and GMIP
	Socioeconomic impacts	N	• Hire local workers. • Develop ownership plan, communicate to IDPs • Develop plan to pay for needed O&M services • Community public meetings to share mitigation information.	Number of local workers, when possible IDP Plans developed and communicated Number of public meetings.	One time during construction phase (local workers) Once when Ownership and O & M plans are complete;	Requirements specified in contracts Inspections by MDF and GMIP

Activity	Identified Environmental Impacts	Are Impacts Potentially Significant?	Mitigation Measure(s)	Monitoring Indicator(s)	Monitoring and Reporting Frequency	Responsible Party(ies)
					Date(s) of community meetings	
	Public health and safety impacts	N	• Documented safety procedures. • Provide workers with protective equipment (e.g., gloves, boots, eyeware). • Maintain regular worker safety training. • Manage construction traffic to protect children and the community. • Signs clearly displayed • Protect public from stored construction materials • Documented underground and surface utilities and structures.	Conformance with safety procedures Percent of workers and supervisors with up-to-date training records Number of accidents and injuries. Complaints from nearby residents Photo log	Inspections at the start of the activity and at least monthly thereafter during construction	Requirements specified in contracts Periodic inspections by MDF and GMIP
2) IDP Cottage Settlements Operations after Improvements. (during first year "Defects Liability" and after liability period)	Impacts during first year "Defects Liability" (water and soil contamination, Waste generation, noise, odor or visual, socioeconomic impacts, public health and safety impacts)	N	• Use "Defects Liability" to correct defects associated with cottage settlements including quantity and quality of water and sanitation at cottages • Correct defects with building construction integrity including foundation, walls and roofing	Number of defects corrected Number of inspections Number of complaints	Quarterly for defects liability 1 year period End of Year Report on improving Cottage Maintenance	Requirements specified in contracts Inspections by MDF and GMIP

Activity	Identified Environmental Impacts	Are Impacts Potentially Significant?	Mitigation Measure(s)	Monitoring Indicator(s)	Monitoring and Reporting Frequency	Responsible Party(ies)
			• Correct defects with sewer network problems such as plugging or erosion, water and sanitation problems at "tail enders" • Provide proper O&M at the sewage treatment plant (e.g., monitoring flows, operations and maintenance) • Establish and maintain documented procedures and provide regular training on defects inspection and repairs. • Strengthen cottage maintenance programs (organize data collection, identify O&M problems throughout the settlement pipelines network and design solutions including better operating guidance, preventive maintenance, program schedules and activities, training and use of "how-to" guides and best practices information.		Programs	
	Poorly operated and maintained potable water systems (IDP public health impacts)	N	• Implement mitigations in water supply O&M report prepared at end of construction period. • Quarterly Water quality testing for indicators (fecal coliforms, nitrates and COD) to ensure delivery of safe	Provide logbook with water quality and quantity monitoring results Number of inspections	Quarterly and annual report with summary - water quality and quantity monitoring results	Requirements specified in contracts Periodic inspections by MDF and GMIP

Activity	Identified Environmental Impacts	Are Impacts Potentially Significant?	Mitigation Measure(s)	Monitoring Indicator(s)	Monitoring and Reporting Frequency	Responsible Party(ies)
			potable water. • Leak detection and inspecting water wells and distribution network ensures delivery of adequate quantity of potable water. Fix leaks. • Inspecting disinfection units and replace UV lamps as needed • Establish and maintain documented procedures and provide regular worker training on O&M water-system inspection	Number of workers trained Number of complaints		
	Poorly operated and maintained sewage treatment plants (soil and water contamination and human health effects)	N	• Implement mitigations in sewage system O&M report prepared at end of construction period. • Routine maintenance provided. For septic tanks, sludge and solids removed per established timetable. • Inspect sewer pipelines for leaks and blockages. Repair as needed. • Inspect grey water disposal systems • Inspect infiltration drain fields to ensure entire area is used for sewage treatment, no ponding. • Inspect/operate drain fields during wet/cold (freezing) weather per established guidelines.	Provide logbook with volume sewage treated in each settlement and number of inspections, sewer leaks and blockages, and septic tanks cleaned Number of workers trained Number of complaints	Quarterly and annual report with summary – quantities of sewage treated -septic tank cleaning and inspections - drainfield inspections	Requirements specified in contracts Periodic inspections by MDF and GMIP

Activity	Identified Environmental Impacts	Are Impacts Potentially Significant?	Mitigation Measure(s)	Monitoring Indicator(s)	Monitoring and Reporting Frequency	Responsible Party(ies)
			• Establish and maintain documented procedures and provide regular worker training on O&M system inspections.			
	Poorly maintained drainage systems (soil and water contamination and flooding affecting public health).	N	• Drainage collectors and road-side drain ditches cleaned twice per year (by IDPs or others). • Inspect drainage system for damaged pipelines, cave-ins, blockages, erosion, trash dumping. • Establish and maintain documented procedures and provide training to improve maintenance for early identification of flooding problems. • Provide trash dumping factsheets, educational materials for schools and communities.	Number of inspections Number of workers trained Number of complaints	Quarterly and annual report with numbers of IDPs cleaning drainage systems	Requirements specified in contracts Periodic inspections by MDF and GMIP

Table 6-3: Environmental Mitigation and Monitoring Plan for IDP Building Rehabilitation Involving Asbestos Remediation (Asbestos-Tiled Roofing, Asbestos Corrugated Sheets, Asbestos Materials)

Activity	Identified Environmental Impacts	Are Impacts Potentially Significant?	Mitigation Measure(s)	Monitoring Indicator(s)	Monitoring and Reporting Frequency	Responsible Party(ies)

Activity	Identified Environmental Impacts	Are Impacts Potentially Significant?	Mitigation Measure(s)	Monitoring Indicator(s)	Monitoring and Reporting Frequency	Responsible Party(ies)
IDP Building Rehabilitation involving Asbestos Materials (AM): 1) Asbestos-tiled Roofing 2) Asbestos Corrugated Sheets 3) Other Asbestos Materials	Hazardous waste with AM could affect human health and environment Impact: Preparing for Asbestos Removal Asbestos Contamination	Y	Preparing for asbestos removal. Considerations: **A)** Spray amended water (1:200 soap-to-water) to keep asbestos containing material (AM) damp, but not saturated. **B)** Place AM in disposal bags, do not allow to accumulate on floor). **C)** Use HEPA vacuums and damp cloth wiping to stop fiber migration or fibers becoming airborne, do not use dry sweeping. **D)** Use 6 mil polyethylene sheeting as barriers for doors, windows, vents, AM breakage/cutting.	Number of Inspections Amounts of AM (kg) AM removal permit (if applicable). Complaints from nearby residents.	Weekly	Requirements specified in contracts Inspections by MDF and GMIP
	Asbestos Contamination During Removal	Y	Asbestos removal procedures. **A)** Removal of AM panels intact, if possible. Place in disposal bags. . **B)** Removal of AM screwed-in panels after wetting screw heads. Clean holes with damp (amended water) cloth. **C)** Removal of AM riveted panels. (Describe expected	Amount of AM (kg) Complaints from nearby residents.	Weekly	Requirements specified in contracts Inspections by MDF and GMIP

Activity	Identified Environmental Impacts	Are Impacts Potentially Significant?	Mitigation Measure(s)	Monitoring Indicator(s)	Monitoring and Reporting Frequency	Responsible Party(ies)
			rivet removal steps). Minimize breakage, use amended water. Place AM and disposable overalls in 6-mil poly bags **A)** Tightly seal bag. **B)** Wipe outside bag with cloth (amended water). **C)** Remove bags, store in designated location. Label.			
	Disposal of AM	Y	Waste AM and bags of contaminated clothing transport to disposal site. **A)** Transport with covered truck. **B)** Excavate special place in landfill, Build wooded encasement structure. Bury 1 meter underground. **C)** Mark site with permanent warning sign.	Amount of AM (kg) Complaints from nearby residents.	Weekly Final AM removal and disposal report, Details of what was done, any problems or unexpected exposures, lessons learned	Requirements specified in contracts Inspections by MDF and GMIP.
	Socio-economic Impacts with AM	Y	Public meetings with community to share information on asbestos removal, handling and disposal. Hire local workers.	Number of public meetings.	Weekly	Requirements specified in contracts Periodic inspections by MDF and GMIP

Activity	Identified Environmental Impacts	Are Impacts Potentially Significant?	Mitigation Measure(s)	Monitoring Indicator(s)	Monitoring and Reporting Frequency	Responsible Party(ies)
			Community public meetings to share mitigation information.			
	Public Health and Safety with AM	Y	Close access to facility during demolition, asbestos removal and transportation for disposal. Written asbestos safety procedures for workers and the public. Provide workers with protective equipment (e.g., Respirators (negative pressure, P100 equivalent particulate filter, half-face or full-face), gloves, disposable overalls). Decontamination washing facility to wash workers from head to toe. Signs clearly displayed'	Safety equipment is being properly used. Number of accidents and injuries.	Weekly	Requirements specified in contracts Inspections by MDF and GMIP

Table 6-4: Environmental Mitigation and Monitoring Plan for Chance-Finds of Biohazards during Rehabilitation of Hospitals, Clinics and Medical Service Buildings for IDP Housing

Activity	Identified Environmental Impacts	Are Impacts Potentially Significant?	Mitigation Measure(s)	Monitoring Indicator(s)	Monitoring and Reporting Frequency	Responsible Party(ies)
Rehabilitation of Hospitals, Clinics and Medical Service Buildings for IDP Housing (Table 6.1 EMMP for IDP buildings also applies to hospitals/clinics)	Chance-finds of biohazards from hospital/medical waste could affect human health and the environment. Possible concerns/impacts are: **A)** Silver and other heavy metals from radiographs/imaging **B)** Radioactive waste from X-rays **C)** Waste containing infectious agents **D)** Mercury from lamps and medical equipment sources **E)** Contamination of waste with cleaning solutions/lab waste **F)** Lead paint removal	N	Mitigations in Table 6.1 also apply to hospitals and clinics and medical service buildings. Mitigations in Table 6.3 apply if asbestos is present. These additional mitigations (See below) apply to chance-finds of hospital/clinic biohazards: **A)** Use company qualified in site remediation to inspect/cleanup/dispose of chance finds of biohazards from hospital, clinics and medical service buildings. **B)** Site inspection by qualified company to identify presence/scope of existing waste piles, stored waste and wastes buried onsite, plus all biohazards in buildings or onsite. Use experts experienced with X-ray photochemicals/lead screens, infectious agents, heavy metals, mercury, lead paint, mold, PCBs, asbestos and/or	Number of Inspections by company qualified in site remediation of biohazards from hospitals and medical service buildings. Number of building sites with biohazards Number of workers trained Amounts of waste identified and removed (kg) Amounts of cleanup waste generated and removed (kg) Complaints	Inspection reports for each hospital building site Reports monthly during construction	Requirements specified in contracts Inspections by MDF and GMIP

Activity	Identified Environmental Impacts	Are Impacts Potentially Significant?	Mitigation Measure(s)	Monitoring Indicator(s)	Monitoring and Reporting Frequency	Responsible Party(ies)
	G) Waste containing old batteries **H)** Mold removal **I)** PCBs and fuels **J)** For remediation involving asbestos, see Asbestos Remediation EMMP (Table 6.3).		radiation, (if needed). **C)** Prepare for cleanup and removal, identify chemical and biological agents in waste, select pretreatment needs to stabilize waste for removal/transport and find suitable waste disposal site Prepare written safety procedures for workers. **D)** Cleanup and removal by qualified company, provide worker protective equipment and training for pretreatment of waste and cleanup/removal, including volatiles/dust emissions, lead paint dust, biological agents, heavy metals, mercury and materials with mold. Provide protections for the public/children near site and restrict access to rehabilitation site. **E)** For hospital/medical service building wards where infectious diseases were treated, provide thorough cleaning under direction of	from nearby residents.		

Activity	Identified Environmental Impacts	Are Impacts Potentially Significant?	Mitigation Measure(s)	Monitoring Indicator(s)	Monitoring and Reporting Frequency	Responsible Party(ies)
			qualified company. **F)** Transport waste in covered truck or other appropriate method, and dispose medical waste in designated place in landfill, mark with warning signs. **G)** Community meetings to share information about wastes, cleanup/removal and disposal methods. Hire local workers			

Figure 6-1: Cottage Decision Tree for Sewage Treatment

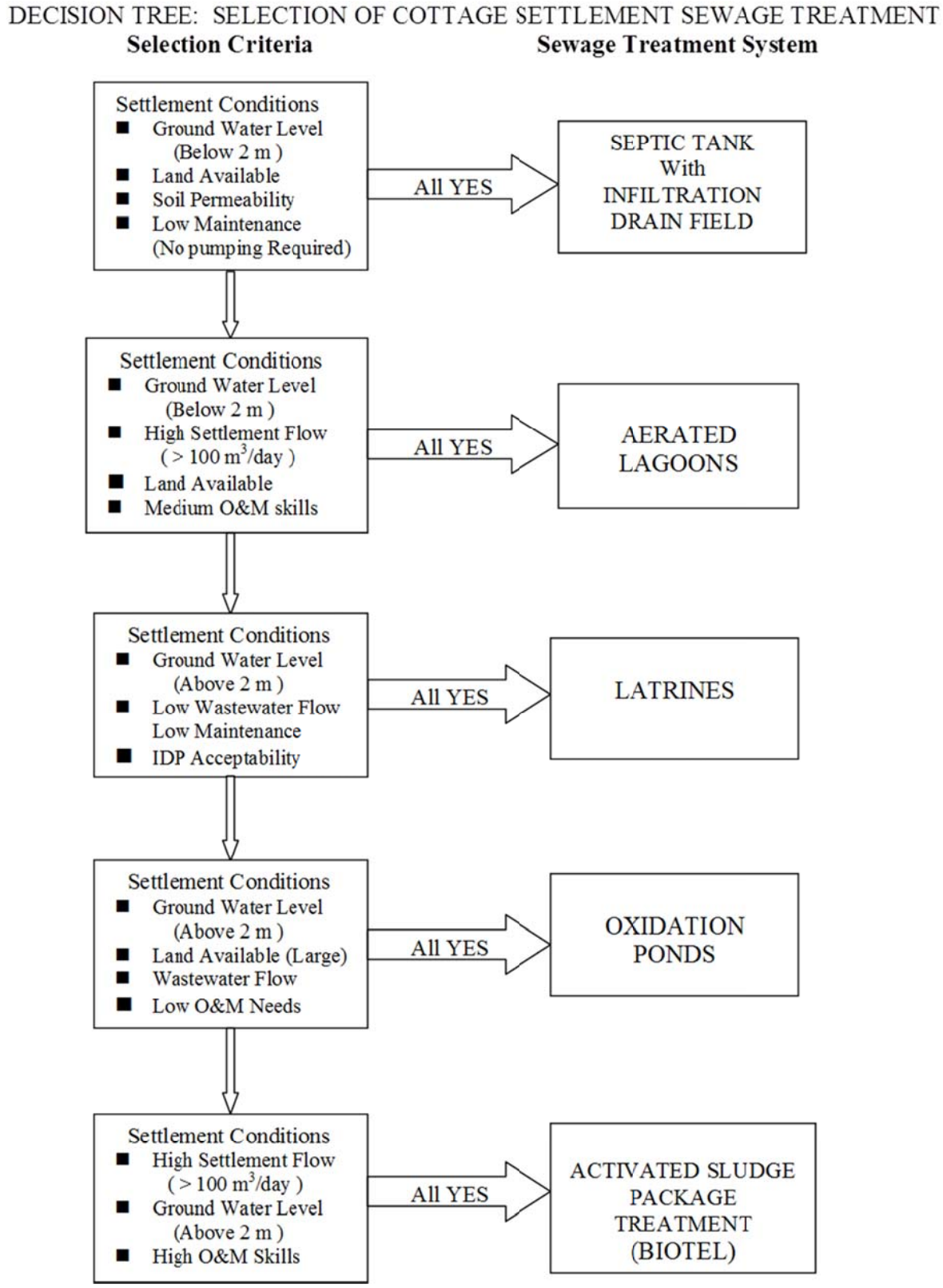

7. LIST OF PREPARERS

Baseline data collection, field studies, alternatives analyses, impact assessment and development of EMMPs and completion of this PEA was conducted by a specialized team of scientists and engineers from Tetra Tech. Backgrounds of principal members of the PEA Team are highlighted below:

James Gallup, Ph.D., P.E., Team Leader and Environmental Engineer. Dr. Gallup is a senior environmental engineer with over 40 years of international experience, including projects in Georgia. He led a team that prepared a Programmatic Environmental Assessment (PEA) for the USAID AgVANTAGE Project implemented by ACDI/VOCA. He has provided direct technical support to the Europe and Eurasia Bureau Environmental Officer and he designed and implemented USAID's Global Environmental Pollution Prevention Project (EP3). Dr. Gallup, a registered professional engineer, earned his Ph.D. in Environmental Engineering from the University of Oklahoma. He holds a BS in Microbiology and MS in Environmental Engineering.

Karen Menczer, Environmental Specialist. Ms. Menczer is an environmental specialist who has supported international development programs in Eastern Europe, Asia, Africa, Latin America and the Caribbean for more than 25 years. She has worked extensively with USAID, most recently preparing Reg 216 environmental documentation for the Georgia Power and Gas Transmission Project. Ms. Menczer worked towards her Ph.D. at the University of New Mexico and in Galapagos, Ecuador. She holds an MS in Ecology and a BS in Biology.

Mamuka Gvilava, Ph.D., Environmental Specialist. Dr. Gvilava is an environmental specialist with fifteen years experience in field work, project management, policy and regional cooperation. He has experience with environmental and social impact assessment, remote sensing and green design. He served as national focal point to the Black Sea Commission and project director of the World Bank and GEF Coastal Zone Management Project. He has a Ph.D. in physics and math.

Mamuka Shaorshadze, Environmental Specialist. Mr. Shaorshadze has 12 years relevant experience, most recently as an environmental supervisor on two Millennium Challenge Georgia (MCG) fund infrastructure programs. He also served as an Environmental Field Officer for the Georgian Oil and Gas Corporation initiatives funded by the MCG. Mr. Shaorshadze earned his Bachelor's Degree in International Economics from Georgian Technical University.

Teimuraz Levanishvili, Housing Rehabilitation Manager. Mr. Levanishvili is a senior civil engineer with more than 40 years of experience in construction management and housing rehabilitation. He served as Director of Construction for the rehabilitation of state and privately-owned facilities in the earthquake-affected region of Sachkhere. He has deep understanding of durable housing solutions that utilize the most appropriate technology and standards. Mr. Levanishvili studied Civil Engineering at Georgian Polytechnic Institute.

David Girgvliani, Ph.D., Environmental Specialist. Dr. Girgvliani is an environmental specialist with over fifteen years experience in environmental consultancy, especially performing environmental impact assessments and ensuring compliance of facility and infrastructure programs. He has wide expertise in designing and supervising ESMS systems inclusive the specific management plans as well as expertise working as a consultant supporting ESMS implementation. He has also implemented a number of projects where he was responsible for compliance monitoring and reporting. He has a Ph.D. in chemistry.

8. APPENDICES

Appendix 8.1: Photos of IDP Buildings

Appendix 8.2: Photos of IDP Cottage Settlements

Appendix 8.3: Potential Environmental Impacts for IDP Buildings

Appendix 8.4: Potential Environmental Impacts for IDP Cottage Settlements

Appendix 8.5: IDP Buildings -- Environmental Site-Specific Screening Analysis

Appendix 8.6: IDP Cottage Settlements – Environmental Site-Specific Screening Analysis

Appendix 8.7: Environmental Inspection Site Visit Report for Rehabilitation of Hospitals, Clinics and Medical Service Buildings

Appendix 8.8: Site Visit Assessment Report for Rehabilitation of Hospitals, Clinics and Medical Service Buildings for IDP Housing

Appendix 8.9: Water Supply, Sanitation and Drainage Improvements by IDP Cottage Settlement

Appendix 8.10: Water Supply and Drainage Improvements (Cottage Settlements)

Appendix 8.11: Water Quality Test Results (Cottage Settlements)

Appendix 8.1 Photos of IDP Buildings

Appendix 8.1: Photos of IDP Buildings

Photo 1. Imereti, Zestaponi, Uznadze St. 142.

Photo 2. Sulkhani-Saba street, Kutaisi.

Photo 3. Kvemo Kartli, Rustavi, Lomouri st. 6.

Photo 4. Shida Kartli, Khareli, Vazha Pshavela 117

Photo 5. 32 - II Nikea street, turning 1, Kutaisi.

Photo 6. Tskhaltubo.

Appendix 8.2 Photos of IDP Cottage Settlements

Appendix 8.2: Photos of IDP Cottage Settlements

Photo 1. Berbuki Settlement, Gori.

Photo 2. Mokhisi Settlement, Kareli.

Photo 3. Shavshvebi Settlement.

Photo 4. Skra Settlement.

Photo 5. Teliani Settlement, Kaspi.

Photo 6. Akhalsopeli Settlement.

Appendix 8.3 Potential Environmental Impacts for IDP Buildings

APPENDIX 8.3: Potential Environmental Impacts for IDP Buildings

IMPACT (Description of effect) and occurrence (construction/operation)	Significance Determination Filter[1]				Are Consequences Significant? (Y) or (N)
	1 Subject of USAID or GoG Requirements[1]	2 Subject of Community Concern	3 Pollution Prevention Potential[2]	4 High Environmental Risk[3]	
Receptor: Soils, Geology and Landscape					
Construction/rehabilitation phase:					
Visual disturbance due to construction/rehabilitation activities					N
Contamination of soils due to accidental spill of fuel/oil and/or other technical liquids			X		Y
Contamination of soil due to uncontrolled disposal of construction waste	X				Y
Land clearance activities (e.g. trench excavation) could generate some amount of the topsoil to be stored					N

[1]Place an "X" in the appropriate column 1, 2, 3, or 4. Starting with Column 1, and proceeding to Column 4. A single "X" (the first one determined) is all that is required for a determination of significance.

[2] Subject to USAID requirements or specifically relevant legislation, regulation, and/or permit requirements. This will likely include effects associated with activities if (1) environmental regulations specify controls and conditions, (2) information must be provided to authorities, and/or (3) there may be periodic inspections or enforcement actions taken by authorities.

[3] *Based on technical and business conditions, such as cost-effectiveness, has a high-potential for pollution prevention or resource-use reduction*

[4] Associated with potential impact to the environment from high environmental loading due to one or more of the following: scale, magnitude, probability, duration (see attached worksheet – definitions used in determining environmental risk).

IMPACT (Description of effect) and occurrence (construction/operation)	Significance Determination Filter[1]				Are Consequences Significant? (Y) or (N)
	1 Subject of USAID or GoG Requirements[1]	2 Subject of Community Concern	3 Pollution Prevention Potential[2]	4 High Environmental Risk[3]	
properly, handled and reused.					
Operation/Maintenance Phase:					
Contamination of soil with nutrients, suspended solids, and pathogens due to improper installation of sewage pipes					N
Receptor: water resources (surface and ground water)					
Construction/rehabilitation phase:					
Contamination of groundwater due to accidental spill of fuel/oil and/or other technical liquids	X				Y
Lack of on-site sanitary facilities for construction workers causing pollution to surface and groundwater					Y
Dumping of demolition debris or excess soil from land-levelling into watercourses	X				Y
Operation/Maintenance Phase:					
Not proper maintenance of ground water wells	X		X		N
Receptor: Air Quality					
IMPACT (Description of effect) and occurrence (construction/operation)					
Emissions from construction machinery, construction waste disposal etc. may increase the level of emission in the air and dust, especially under windy conditions.	X				Y
Removal of groundcover, borrow pits, and construction sites, creating conditions for airborne dust and particulates					N

IMPACT (Description of effect) and occurrence (construction/operation)	Significance Determination Filter[1]				Are Consequences Significant? (Y) or (N)
	1 Subject of USAID or GoG Requirements[1]	2 Subject of Community Concern	3 Pollution Prevention Potential[2]	4 High Environmental Risk[3]	
Operation/Maintenance Phase:					
No significant impact on air quality during operation/maintenance					N/A
Receptor: Biodiversity					
Construction/rehabilitation phase:					
Construction process may cause removal of vegetation cover, changes in land use pattern. Proposed sites have been previously disturbed and utilized for residential use and there are no unique and/or important farmlands and/or flora species.					N
Operation/Maintenance Phase:					
No significant impact on vegetation cover during operation/maintenance					N
Community, Socio-Economic, and Public Health (including cultural and historical assets, population, public health, temporary resettlement etc.)					
Population					
Construction/rehabilitation phase:					
Disturbance of IDPs due to construction machinery, traffic and/or possible removal activities			X		Y
Load on the existing roads will increase due to construction machinery; traffic delays could affect local population within the vicinity of project					N
Traffic increase will generate noise, air emissions, and vibration that might impact on community safety, and cause public nuisance;					N

IMPACT (Description of effect) and occurrence (construction/operation)	Significance Determination Filter[1]				Are Consequences Significant? (Y) or (N)
	1 Subject of USAID or GoG Requirements[1]	2 Subject of Community Concern	3 Pollution Prevention Potential[2]	4 High Environmental Risk[3]	
Temporary employment opportunities in the construction activities (beneficial impact)			X		Y
During the whole construction period, IDPs living in buildings selected for reconstructive/rehabilitation activities will be relocated. Distance of relocation places from their places of employment might cause adverse financial impact to IDP's. Besides, IDPs might undergo emotional stresses due to disruption with their normal lives.			X		Y
Operation/Maintenance Phase:					
Improvement of livelihoods, including improved standards of living for affected people (Beneficial)		X			Y
Public Health					
Construction/rehabilitation phase:					
Construction activities might cause health impact to the workers (e.g. construction related accidents). Also see Air Quality, Population Receptors	X				Y
Inadequate disposal of construction wastes	X				Y
inadequate management of temporary sanitation facilities for workers could cause negative impact on public health during construction phase			X		Y
IDP collective building may contain lead and/or asbestos containing material. Improper handling and disposal of hazardous wastes at project site (e.g. asbestos) might cause negative health impact	X				Y

IMPACT (Description of effect) and occurrence (construction/operation)	Significance Determination Filter[1]				Are Consequences Significant? (Y) or (N)
	1 Subject of USAID or GoG Requirements[1]	2 Subject of Community Concern	3 Pollution Prevention Potential[2]	4 High Environmental Risk[3]	
Demolition rubble creating breeding grounds for rats, standing water creating breeding grounds for insect and water-borne diseases					N
Operation/Maintenance Phase:					
Improvement of livelihoods, including improved standards of living for affected people (Beneficial)		X			Y
Upgrading infrastructure would beneficially impact on public health and decrease level of water borne and/or sewage related diseases; (Beneficial)		X			Y

Appendix 8.4 Potential Environmental Impacts for IDP Cottage Settlements

APPENDIX 8.4: Potential Environmental Impacts for IDP Cottage Settlements

IMPACT (Description of effect) and occurrence (construction/operation)	Significance Determination Filter[1]				Are Consequences Significant? (Y) or (N)
	1 Subject of USAID or GoG Requirements[2]	2 Subject of Community Concern	3 Pollution Prevention Potential[3]	4 High Environmental Risk[4]	
Receptor: Soils, Geology and Landscape					
Construction/rehabilitation phase:					
Visual disturbance due to construction/rehabilitation activities					N
Contamination of soils due to accidental spill of fuel/oil and/or other technical liquids			X		Y
Contamination of soil due to uncontrolled disposal of construction waste	X				Y

[1] Place an "X" in the appropriate column 1, 2, 3, or 4. A single "X" (the first one determined) is all that is required for a determination of significance.

[2] Subject to USAID requirements or specifically relevant legislation, regulation, and/or permit requirements. This will likely include effects associated with activities if (1) environmental regulations specify controls and conditions, (2) information must be provided to authorities, and/or (3) there may be periodic inspections or enforcement actions taken by authorities.

[3] Based on technical and business conditions, such as cost-effectiveness, has a high-potential for pollution prevention or resource-use reduction

[4] Associated with potential impact to the environment from high environmental loading due to one or more of the following: scale, magnitude, probability, duration (see attached worksheet - definitions used in determining environmental risk).

Installing sewage collector system for IDPs may require vibratory pile driving operations which may potentially affect adjacent land and/or buildings					N
Construction process may cause removal of vegetation cover, changes in land use pattern and cause erosion. Proposed sites have been previously disturbed and utilized for residential use and there are no unique and/or important farmlands.					N
Construction activities involves some land clearance activities (e.g. trench excavation for sewage system installation), which can generate some amount of the topsoil to be stored properly, handled and reused.					N
Operation/Maintenance Phase:					
Contamination of soil with nutrients, suspended solids, and pathogens due to improper installation of sewage pipes and sewage treatment system					N
Receptor: water resources (surface and ground water)					
Construction/rehabilitation phase:					
Contamination of groundwater due to accidental spill of fuel/oil and/or other technical liquids	X				Y
Lack of on-site sanitary facilities for construction workers causing pollution to surface and groundwater					Y
Dumping of demolition debris or excess soil from land-levelling into watercourses	X				Y
Contaminate surface and/or underground water with nutrients, biological oxygen demand, suspended solids, and pathogens due to improper installation of sewage treatment system					N
Construction/rehabilitation phase:					
Not proper maintenance of sewage treatment					N

Receptor: Air Quality					
IMPACT (Description of effect) and occurrence (construction/operation)					
Construction activities (e.g. emissions from construction machinery, construction waste disposal etc.) may increase the level of emission in the air and dust, especially under windy conditions.	X				Y
Removal of groundcover, borrow pits, and construction sites, creating conditions for airborne dust and particulates					N
Construction/rehabilitation phase:					
No significant impact on air quality during operation/maintenance					N/A
Receptor: Biodiversity					
IMPACT (Description of effect) and occurrence (construction/operation					
Construction process may cause removal of vegetation cover, changes in land use pattern. Proposed sites have been previously disturbed and utilized for residential use and there are no unique and/or important farmlands.					N
Construction/rehabilitation phase:					
No significant impact on biodiversity during operation/maintenance					N
Community, Socio-Economic, and Public Health (including cultural and historical assets, population, public health, temporary resettlement etc.)					
Population					
Construction activities (e.g. construction machinery,			X		Y

traffic and/or possible removal activities) may cause the increase the noise/vibration level during the construction process;					
Load on the existing roads will increase due to construction machinery. Construction activities cause traffic delays, which affect local population within the vicinity of project;					N
Traffic increase will generate noise, air emissions, and vibration that might impact on community safety, and cause public nuisance;					N
Temporary employment opportunities in the construction activities (beneficial impact)			X		Y
Construction/rehabilitation phase:					
Improvement of livelihoods, including improved standards of living for affected people		X			Y
Public Health					
Construction activities might cause health impact to the workers (e.g. construction related accidents). Also see Air Quality, Population Receptors	X				Y
Inadequate disposal of construction wastes	X				Y
Construction activities may need installing of temporary sanitation facilities at construction sites; inadequate management of this sites could cause negative impact on public health during construction phase			X		Y
Rehabilitated structure may contain asbestos containing material. Improper handling and disposal of hazardous wastes at project site (e.g. asbestos) might cause negative health impact	X				Y
Demolition rubble creating breeding grounds for rats, standing water creating breeding grounds for insect and water-borne diseases					N

Construction/rehabilitation phase:					
Upgrading infrastructure would beneficially impact on public health and decrease level of water borne and/or sewage related diseases;		X			Y

Definitions Used in Determining Environmental Risk

Parameter	Rating Categories				
	1	**2**	**3**	**4**	**5**
Scale	**Insignificant volume/quantity**	**Low volume/quantity**	**Medium volume/quantity**	**Medium volume/quantity**	**High volume/quantity**
Severity	Minimal impact	Moderate impact but localized and readily containable	Moderate impact over multiple locations	Significant impact and/or regional	Extreme impact and/or potential for global impact
Probability	Very unlikely under any operating condition	Occurs during abnormal/emergency conditions. Probability anticipated and managed	Occurs during routine maintenance activities	Occurs during major maintenance activities	Occurring during normal operating conditions
Duration	Spike situation extremely short-term duration within one day	Less than one month	One to six months	Less than one year	Long-term duration greater than one year or continuous

Appendix 8.5 IDP Buildings - Environmental Site-Screening Analysis

APPENDIX 8.5: IDP Buildings -- Environmental Site-Screening Analysis

Example: Kutaisi collective center building Site Screening Analysis

General Information

Project Name	Rehabilitation of Collective center Building Address: # 8 Nikea Str., Kutaisi, Georgia
Type of project	Rehabilitation
Location (district / region)	Kutaisi, Imereti Region, Georgia
Ownership (private/state)	State
Surrounding Present Land Use	[ ] Agriculture [ ] Residential [ ] Tourism [ ] Industrial [ ] Forest Land [ ] Institutional [ ] Commercial [ ] Open Spaces [ ] Others, pls. Specify : Urban Environment

General Construction Activities

Is there and impact because / to	Construction	Operation and Maintenance
Construction / rehabilitation of structures and buildings?	Yes	No
Construction / rehabilitation of access roads?	No	No
Temporary sites used for construction works or housing of construction workers?	Yes	No
Significant risk associated with waste transport?	Yes	No
Adequate waste disposal facilities?	No	No
Trenching or excavation?	No	No
Require offsite overburden / waste disposal or borrow pits >1.0 ton?	Yes	No

Is there and impact because / to	Construction	Operation and Maintenance
Require the use of dangerous / hazardous substances (e.g. paints, oil, lubricants, chemicals; pls. Specify)?	No	No
Require a collection and disposal system for hazardous waste?	Yes	No
Increase vehicle trips > 20% or cause substantial congestion?	Yes	No
Cause or contribute to safety hazards?	Yes	No
Inadequate access or emergency access for anticipated volume of people or traffic?	No	No
Involve actions that will cause physical changes in the locality (topography, land use, changes in water bodies, etc.)?	No	No

Geology and Soils

Is there and impact because / to	Construction	Operation and Maintenance
Conducted near geologic hazards (faults, landslides, liquefaction, un-engineered fill, etc.)?	No	No
Cause subsidence, landslides or erosion?	No	No
Potential impact to soil – e.g., movement of soil, binding or bonding of soils, compressive strength of soils?	Yes	No
Management of excess soil or spoil material?	No	No
Physical degradation of the local environment (e.g., need for revegetation)?	No	No

Water Resources

Is there and impact because / to	Construction	Operation and Maintenance
Flooding or extreme or adverse climatic conditions that might cause a break or malfunction in the system?	No	No
River, stream or lake onsite or within 30 meters of construction?	No	No
Wetlands crossed or affected by the project?	No	No
Quality or quantity of groundwater (aquifers) or public water supplies (e.g., wells)?	Yes	No

Is there and impact because / to	Construction	Operation and Maintenance
Quality or quantity of surface water?	Yes	No
Run-off as a result of the hardening of surfaces, or loss of the sponge effect of vegetation, that might affect sensitive areas?	No	No

Biological Resources

Is there and impact because / to	Construction	Operation and Maintenance
Important, high quality or scarce resources that could be affected by the project?	No	No
Located in a Protected Area or Wildlife Corridor?	No	No
Inundate or remove wetland habitats?	No	No
Diversity of plant communities?	No	No
Natural replenishment of existing species?	No	No
Overexploitation of biological resources?	No	No
Vegetation removal or construction in wetlands or riparian areas > 1.0 hectare?	No	No
Use of pesticides / rodenticides, insecticides, or herbicides > 1.0 hectare?	No	No

Socioeconomic Issues

Is there and impact because / to	Construction	Operation and Maintenance
Existing settlements in the vicinity of the proposed project?	Yes	No
Existing land uses on or around the project that could be affected by the project?	No	No
Areas on or around the location of the project that are already subject to pollution or environmental damage?	No	No
Permanent or temporary change in land use, land cover or topography including increases in intensity of land use?	Yes	No
Social infrastructures located in or near the project area (e.g.,	No	No

Is there and impact because / to	Construction	Operation and Maintenance
schools, health centers / clinics, places of worship, others?		
Social acceptability of the project (community, government, non-governmental organizations)?	No	No
Visual and odor effects of waste sites?	Yes	No
Risk to the community and the local environment should the facility break down?	No	No
Potential conflict with adjacent land uses?	No	No
Non-compliance with existing codes, plans, permits or design factors?	No	No
Construction in national park or designated recreational area?	No	No
Relocation of >10 individuals for +6 months?	Yes	No
Interrupt necessary utility or municipal service > 10 individuals for + 6 months?	No	No
Noise levels > 5 decibels for + 3 months?	Yes	No
Adverse visual impact when compared to the surrounding natural landscape?	Yes	No
Affect future land uses on or around the location?	No	No
Are there any areas on or around the location that are densely populated or built-up, which could be affected by the project?	No	No
Highly visible to many people?	No	No
Lead to pressure for consequential project that could have significant impact on the environment (e.g. more housing, new roads, new supporting industries or utilities, etc.)?	No	No
Cumulative effects due to proximity to other existing or planned projects with similar effects?	No	No
Social changes, for example, in demography, traditional lifestyles, and employment?	No	No

Cultural Issues

Is there and impact because / to	Construction	Operation and Maintenance

Prehistoric, historic, or paleontological resources within 30 meters of construction?	No	No
Unique cultural or ethnic values at the site?	No	No

Public Health issues

Will the project affect…	Construction	Operation and Maintenance
human or community health or welfare?	Yes	Yes
The quality or toxicity of air, water, foodstuffs and other products consumed by humans?	Yes	No
Morbidity or mortality of individuals, communities or populations by exposure to pollution?	Yes	No
Occurrence or distribution of disease vectors including insects?	No	Yes
Vulnerability of individuals, communities or populations to disease?	No	No
Individuals' sense of personal security?	No	No
Community cohesion and identity?	No	No
Cultural identity and associations?	No	No
Minority rights?	No	No
Housing conditions?	Yes	No
Employment and quality of employment?	Yes	No
Economic conditions?	No	No
Social institutions?	No	No
Cause accidents that could affect human health or the environment?	No	No
From explosions, spillages, fires etc.?	No	No
From storage, handling, use or production of hazardous or toxic substances?	Yes	No
Be affected by natural disasters causing environmental damage (e.g. floods, earthquakes, landslip, etc.)?	No	No
Vulnerable groups of people who could be affected by the project	No	No

(e.g. hospital patients, the elderly)?		

Air Quality

Is there and impact because / to	Construction	Operation and Maintenance
Onsite air pollutant emissions?	Yes	No
Violation of applicable air pollutant emissions or ambient concentration standards?	No	No
Vehicle traffic during construction or operation?	Yes	No
Demolition or blasting for construction?	No	No
Odor during construction or operation?	Yes	No
Release pollutants or any hazardous, toxic or noxious substances to air?	No	No
Emissions from combustion of fossil fuels from stationary or mobile sources?	Yes	No
Emissions from materials handling including storage or transport?	No	No
Emissions from construction activities including plant and equipment?	Yes	No
Dust or odors from handling of materials including construction materials, sewage and waste?	Yes	No
Emissions from burning of waste in open air (e.g. slash material, construction debris)?	Yes	No

Noise and Vibration

Is there and impact because / to	Construction	Operation and Maintenance
Noise and vibration or release of light, heat energy or electromagnetic radiation?	Yes	No
From operation of equipment (e.g. engines, ventilation plant, crushers)?	Yes	No
From construction or demolition?	Yes	No
From blasting or piling?	No	No
From construction or operational traffic?	Yes	No

Is there and impact because / to	Construction	Operation and Maintenance
From sources of electromagnetic radiation?	No	No

Appendix 8.6 IDP Cottage Settlements - Environmental Site-Screening Analysis

APPENDIX 8.6: IDP Cottage Settlements -- Environmental Site-Screening Analysis

Example: Akhalsofeli IDP Settlement Site Screening Analysis

General Information

Project Name	Providing on-site sewage system in Akhalsofeli Settlement; Constructing the storage facilities and outdoor bath and toilet facilities
Type of project	New Construction
Location (district / region)	Akhalsofeli IDP Settlement, Shida Kartli Region, Georgia
Ownership (private/state)	
Surrounding Present Land Use	[X] Agriculture [X] Residential [ ] Tourism [ ] Industrial [ ] Forest Land [ ] Institutional [ ] Commercial [ ] Open Spaces [ ] Others, pls. Specify :

General Construction Activities

Is there and impact because / to	Construction	Operation and Maintenance
Construction / rehabilitation of structures and buildings?	Yes	No
Construction / rehabilitation of access roads?	No	No
Temporary sites used for construction works or housing of construction workers?	Yes	No
Significant risk associated with waste transport?	No	No
Adequate waste disposal facilities?	No	No
Trenching or excavation?	Yes	No
Require offsite overburden / waste disposal or borrow pits >1.0 ton?	Yes	No
Require the use of dangerous / hazardous substances (e.g. paints, oil, lubricants, chemicals; pls. Specify)?	No	No
Require a collection and disposal system for hazardous waste?	No	No

Is there and impact because / to	Construction	Operation and Maintenance
Increase vehicle trips > 20% or cause substantial congestion?	Yes	No
Cause or contribute to safety hazards?	Yes	No
Inadequate access or emergency access for anticipated volume of people or traffic?	No	No
Involve actions that will cause physical changes in the locality (topography, land use, changes in water bodies, etc.)?	Yes	No

Geology and Soils

Is there and impact because / to	Construction	Operation and Maintenance
Conducted near geologic hazards (faults, landslides, liquefaction, un-engineered fill, etc.)?	No	No
Cause subsidence, landslides or erosion?	No	No
Potential impact to soil – e.g., movement of soil, binding or bonding of soils, compressive strength of soils?	Yes	No
Management of excess soil or spoil material?	Yes	No
Physical degradation of the local environment (e.g., need for revegetation)?	Yes	No

Water Resources

Is there and impact because / to	Construction	Operation and Maintenance
Flooding or extreme or adverse climatic conditions that might cause a break or malfunction in the system?	No	No
River, stream or lake onsite or within 30 meters of construction?	No	No
Wetlands crossed or affected by the project?	No	No
Quality or quantity of groundwater (aquifers) or public water supplies (e.g., wells)?	Yes	No
Quality or quantity of surface water?	No	No
Run-off as a result of the hardening of surfaces, or loss of the sponge effect of vegetation, that might affect sensitive areas?	No	No

Biological Resources

Is there and impact because / to	Construction	Operation and Maintenance
Important, high quality or scarce resources that could be affected by the project?	No	No
Located in a Protected Area or Wildlife Corridor?	No	No
Inundate or remove wetland habitats?	No	No
Diversity of plant communities?	No	No
Natural replenishment of existing species?	Yes	No
Overexploitation of biological resources?	No	No
Vegetation removal or construction in wetlands or riparian areas > 1.0 hectare?	No	No
Use of pesticides / rodenticides, insecticides, or herbicides > 1.0 hectare?	No	No

Socioeconomic Issues

Is there and impact because / to	Construction	Operation and Maintenance
Existing settlements in the vicinity of the proposed project?	No	No
Existing land uses on or around the project that could be affected by the project?	No	No
Areas on or around the location of the project that are already subject to pollution or environmental damage?	No	No
Permanent or temporary change in land use, land cover or topography including increases in intensity of land use?	Yes	No
Social infrastructures located in or near the project area (e.g., schools, health centers / clinics, places of worship, others?	No	No
Social acceptability of the project (community, government, non-governmental organizations)?	No	No
Visual and odor effects of waste sites?	Yes	No
Risk to the community and the local environment should the facility break down?	No	No

Is there and impact because / to	Construction	Operation and Maintenance
Potential conflict with adjacent land uses?	No	No
Non-compliance with existing codes, plans, permits or design factors?	No	No
Construction in national park or designated recreational area?	No	No
Relocation of >10 individuals for +6 months?	Yes	No
Interrupt necessary utility or municipal service > 10 individuals for + 6 months?	No	No
Noise levels > 5 decibels for + 3 months?	Yes	No
Adverse visual impact when compared to the surrounding natural landscape?	Yes	No
Affect future land uses on or around the location?	No	No
Are there any areas on or around the location that are densely populated or built-up, which could be affected by the project?	Yes	No
Highly visible to many people?	Yes	No
Lead to pressure for consequential project that could have significant impact on the environment (e.g. more housing, new roads, new supporting industries or utilities, etc.)?	No	No
Cumulative effects due to proximity to other existing or planned projects with similar effects?	No	No
Social changes, for example, in demography, traditional lifestyles, and employment?	No	No

Cultural Issues

Is there and impact because / to	Construction	Operation and Maintenance
Prehistoric, historic, or paleontological resources within 30 meters of construction?	No	No
Unique cultural or ethnic values at the site?	No	No

Public Health issues

Will the project affect…	Construction	Operation and Maintenance
human or community health or welfare?	Yes	No
The quality or toxicity of air, water, foodstuffs and other products consumed by humans?	Yes	No
Morbidity or mortality of individuals, communities or populations by exposure to pollution?	No	No
Occurrence or distribution of disease vectors including insects?	Yes	No
Vulnerability of individuals, communities or populations to disease?	No	No
Individuals' sense of personal security?	No	No
Community cohesion and identity?	No	No
Cultural identity and associations?	No	No
Minority rights?	No	No
Housing conditions?	No	No
Employment and quality of employment?	Yes	No
Economic conditions?	No	No
Social institutions?	No	No
Cause accidents that could affect human health or the environment?	Yes	No
From explosions, spillages, fires etc.?	Yes	No
From storage, handling, use or production of hazardous or toxic substances?	No	No
Be affected by natural disasters causing environmental damage (e.g. floods, earthquakes, landslip, etc.)?	No	No
Vulnerable groups of people who could be affected by the project (e.g. hospital patients, the elderly)?	No	No

Air Quality

Is there and impact because / to	Construction	Operation and Maintenance

Onsite air pollutant emissions?	Yes	No
Violation of applicable air pollutant emissions or ambient concentration standards?	No	No
Vehicle traffic during construction or operation?	Yes	No
Demolition or blasting for construction?	No	No
Odor during construction or operation?	Yes	No
Release pollutants or any hazardous, toxic or noxious substances to air?	Yes	No
Emissions from combustion of fossil fuels from stationary or mobile sources?	Yes	No
Emissions from materials handling including storage or transport?	Yes	No
Emissions from construction activities including plant and equipment?	Yes	No
Dust or odors from handling of materials including construction materials, sewage and waste?	Yes	No
Emissions from burning of waste in open air (e.g. slash material, construction debris)?	No	No

Noise and Vibration

Is there and impact because / to	Construction	Operation and Maintenance
Noise and vibration or release of light, heat energy or electromagnetic radiation?	Yes	No
From operation of equipment (e.g. engines, ventilation plant, crushers)?	Yes	No
From construction or demolition?	Yes	No
From blasting or piling?	No	No
From construction or operational traffic?	Yes	No
From sources of electromagnetic radiation?	No	No

Appendix 8.7 Environmental Inspection Site Visit Report for Rehabilitation of Hospitals, Clinics and Medical Service Buildings

TetraTech | Engineering & Architecture Services

One Grant Street, Framingham, MA 01701

www.tetratech.com

Subject: GMIP Housing PEA -- Environmental Inspection Report of Medical Facilities in Zestaponi, Georgia (January 31, 2011)

From: Mamuka Gvilava, Environmental Specialist

Date: February 01, 2012

Objectives

Environmental inspection visits and staff interviews were conducted at two IDP housing sites in Zestaponi, Georgia:

Site 1:
-- Zestaponi, Central Hospital (Uznadze 142), Unicode 137 (Building 1)
-- Zestaponi, Central Hospital (Uznadze 142), Unicode 137 (Building 2)

Site 2:
-- Zestaponi, Central Policlinic of Zestaponi Municipality (Rustaveli 2), Unicode #139
-- Zestaponi, Zestaponi Dental Policlinic (Rustaveli 2), Unicode 140

Inspection purpose and issues for inspection:

(1) Inspection visit of four hospital/clinic/medical services building sites selected for rehabilitation for IDP housing. Inspection considering the following environmental issues: on-site waste disposal facilities, incinerators, PCBs in old hospital power stations, lead paint, mercury waste, potential for radioactivity, mold in wet basements or in walls from leaking roofs, pollution at separate power supply building and from boiler house/generator room/transformer storage sites.

(3) Interviews with building management regarding possible IDP concerns with moving into rehabilitated hospitals, clinics and medical service buildings.

(2) Investigate GoG regulations that address hospital wastes, biohazards, radioactivity, etc.

Site Visit Results: Site 1

Inspection visits were made by Mamuka Gvilava and Mamuka Shaorshadze. The site visit included discussions with management and site inspections. Site 1 includes Zestaponi, Central Hospital Buildings 1 and 2; they are separate parts of the same building site. The site is a large area (few hundred meters wide in both directions) in uphill part of Zestaponi. There is no staff at the faculty; key medical staff were transferred to a hospital in December 2011. Interviews were conducted with the former manager of the facility at the new GeoHospitals Medical Center:

Mr. Sergo Maghlakelidze, former director of the Zestaponi Central Hospital (599-14-34-86)
Mr. Murtaz, Local Manager of "Irao" Insurance Company (577-14-51-96)
Mrs. Sopho Chumburidze, former head of epidemiology at the Central Hospital (598-36-39-01)

Following discussions with management, the team inspected Building 1 and Building 2. The following are responses and inspection results:

- Original hospital was built in 1967. The hospital and other medical service buildings were leased it from the Ministry of Economy and Sustainable Development (MoESD).

- Medical waste disposal was conducted on a contractual basis by EcoMed (contact Mr. Akaki, 598-36-39-01 in Samtredia). Waste typically included syringes, transfusion systems and other (Class B) medical wastes. We were directed to EcoMed for further inquires on disposal methods. Typical waste volume was 10 liter-containers per week. Medical waste was collected by the hospital in sealed containers and picked up by EcoMed.

- EcoMed has been operating for 3 years. Before EcoMed, the hospital collected Class A and Class B wastes separately. Class B wastes were treated with disinfecting solutions before transportation for disposal by the Municipal Waste Service under supervision of the Sanitary-Epidemiological Station. After SanEpid Service/Department was liquidated, EcoMed began operations, charging about 80 GEL per container.

- There was no incinerator at the site and waste was not burned onsite. Surgery operations were performed in the hospital, but body parts were given to relatives for burial in municipal cemeteries. (Note that next to the hospital [about 80 m away and not part of Site 1] is a closed maternity hospital where human remains were buried onsite.).

- There is an electric transformer station at the facility, currently in operating condition. Changing oils was the responsibility of SakEenergo. Transformer oils were not stored at the hospital site.

- There was no lead paint used in the x-ray room; it was finished with barite plaster for x-ray absorption. Staff was not aware whether lead paints were used; no painting has been done since 1985 and oil based paints were typically used in the past. (Comment: This finding is typical for all facilities; lead paint was not used in medical facilities or other buildings.)

- There are 7-8 thermometers and blood pressure detectors at the vacant facility. While they contain mercury, no major mercury issues exist. Also, GeoHospitals plans to move these materials to the new hospital. The Liquidation Commission under MoESD is responsible for abandoned health facilities. Mr. Nanikashvili (599765523) is chief liquidator for Zestaponi municipality.

- The only radiation source was the X-ray unit. There was an issue with photographic films and film development chemicals, but silver and other chemical solutions were collected by local businessmen. No radiography analysis was performed at the hospital site; therefore, radiation is not expected to be a problem.

- Laboratory testing included clinical blood and urine tests, biochemical tests, X-ray analysis and physiotherapeutic equipment. This equipment is mostly outdated and expected to be managed by GeoHospitals.

- Ms. Sopho Chumburidze (former head of epidemiology) discussed pathogens and infectious agents onsite. There was an infectious diseases unit at the hospital, but it was connected to municipal sewer. In recent years, there were no serious infectious disease cases, typically only food contamination, some old dysentery and hepatitis cases. Nothing was buried and pathogens/infectious agents are not expected to be present at the site.
- The main problem during rehabilitation might be the sewers/manholes and sanitary facilities inside the building. Everything will probably need to be replaced.
- There are 2 twenty ton above ground tanks for diesel fuel storage, but tanks are empty and have not been used for 25 years. They are not leaking.
- There are two electric generators (14 kilowatt and 2 kilowatt) generators installed in 2001. There are no storage tanks, just canisters. A 14 kilowatt generator was donated by the USAID humanitarian assistance project and the 2 kw generator was provided by local Gamgeoba.
- No mold was seen and none is expected on walls or in the buildings. There was a concern with moisture from the leaking ceiling, but the roof was repaired in 2005. There is no moisture in the building, even in the cellar. Groundwater is not a problem. However, there is an attached 2-store building (which contained the X-ray facility) that may have moisture.
- There is no asbestos roofing or asbestos insulation in the buildings.

Following are pictures from the inspection of Site 1 (Buildings 1 and 2).

Layout of the hospital as seen from the entrance.

Towers of mobile phone providers.

Attached 2-story building may have moisture.

Looking into the cellar from outside shows that water is not penetrating the building.

Openings into the cellar may present a safety concern.

Old water supply tank.

Abandoned diesel tanks. In snow, difficult to check for leakage.

"Kitchen" and "washing" facilities with boiler and its exhaust stack.

Same facilities from inside.

Abandoned infectious disease compound.

Transformer seems in working condition.

Auxiliary facilities need to be demolished.

Uncovered manholes pose safety risk.

Nuclear escape bunker.

Open "manhole" in bunker.

Cellar is free from water penetration.

Construction waste in the cellar.

Diesel 14+2 kilowatt electric generators.

This part of the cellar is self-explanatory ("Entry Forbidden!" in Russian).

"Meeting room".

Ceiling.

X-ray facility (2 rooms).

Laboratory with old chemicals.

Laboratory chemicals

"Stalker" film scene.

Former childrens hospital (not part of project).

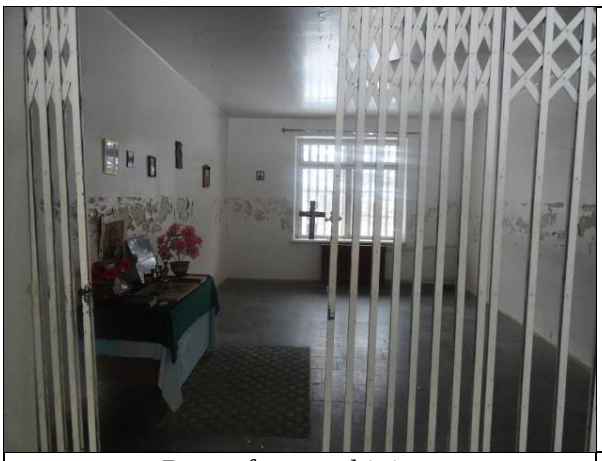

Room for worshiping,

Emergency reception.

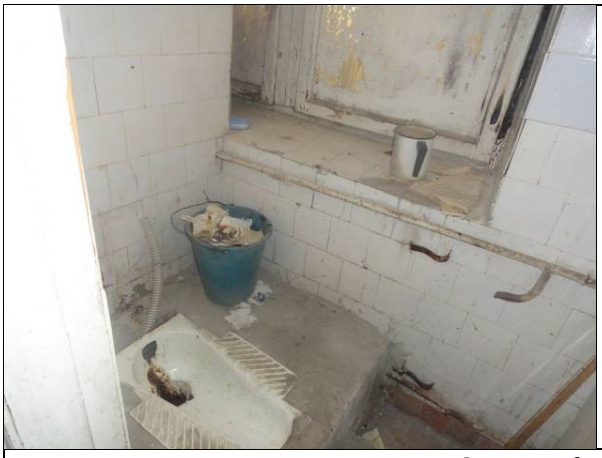

Typical scenes from the second floor.

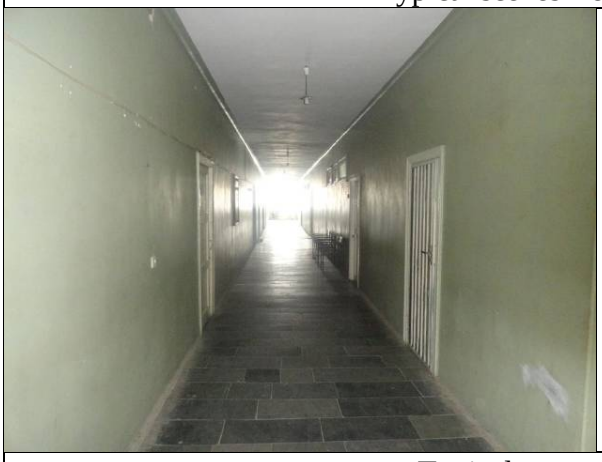

Typical scenes from third floor

Typical scenes from third floor

Gynecology chair.

Surgery room with equipment.

Lift shaft in building.

Children hospital

Impressions from the fourth floor.

Corridor on this floor is ready for rehabilitation

Toilets remaining on this floor.

Floor is relatively clean.

Antennas on the roof.

Landscape around building.

Nearby evergreens and fruit trees.

Site Visit Results: Site 2 (Buildings 3 and 4)

Site is a small area in a busy part of Zestaponi (small triangular land plot approx 10mx5m). The building is still occupied by staff of both regular and dental policlinic. Discussions were conducted with Ms. Lia Ebanoidze, Chief Doctor of Ambulatory Center (593-93-63-97). She is in charge of Buildings 3 and 4. Following discussions, the team inspected Building 3 and Building 4. The following are responses and inspection results:

- Three of 9 medical facilities in the city have been moved into a new medical center. The other six are located in Buildings 3 and 4 (until September). Buildings 3 and 4 were constructed in 1985. There are approximately 45 rooms in both sections of the building. There are 60-70 persons currently working in both buildings. There are therapeutic treatment, oncology, pediatric service, unit for sexually transmitted diseases, TB unit with two categories including MDR (with separate entry door).
- The hospital has an agreement with EcoMed for disposal of medical waste. Special color coded yellow plastic bags are combined into larger plastic bags until given to EcoMed for transfer and disposal. Cost is 70 GEL per 10 liter container delivered to EcoMed. Volumes of waste are small and there is no treatment. The hospital surgeon, urologist, traumatologist or other specialists are located in the new medical center.
- There are no generators for electric power.
- It is unlikely that there lead paint was used in Buildings 3 or 4.
- There are no mercury issues from thermometers or similar equipment.
- The only radiation source is X-ray radiography, and the hospital uses a new digital version using low irradiation equipment. No radioactive substances are used. No radiological marker treatments are performed.
- There are no fuel tanks nor storage tanks for chemicals.
- Only emergency medications are used. Solutions like lysoformin or biododex are used for disinfecting equipment. About 1-2 liters are used each month.
- No mold was present in the building. There is some enhanced moisture and humidity present on the first floor. There was a leaking ceiling below the roof.
- Building may need reorganization to make them work as living space for IDPs. It uses a corridor system which may not work very well as a dwelling house.

Following are pictures from the inspection of Site 2 (Buildings 3 and 4).

Municipal Ambulatory Policlinic

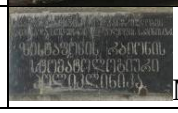

Municipal Dental Policlinic

Cellar

Typical toilet

Racks with chemicals in typical room

Working environment.

Dentist's workshop.		Leaking ceiling below the roof.

Additional Consultations:

Consultations with Mr. Kakha Khubua, Manager of EcoMed (599 15 89 99) and Mr. Akaki, Operator of EcoMed (599765523).

- EcoMed was established 4 years ago in Tbilisi. EcoMed provides 10 liter or 30 liter special hermetically sealed containers to collect medical waste. Medical Class B waste is incinerated (actually, autoclaving) at Ghudushauri Clinic in Tbilisi. For Zestaponi Hospital, EcoMed collected 30 liter volume of Class B waste each week. Special containers were provided and containers were stored indoors or outdoors, depending on local conditions.

- There are no facilities to incinerate chemicals in Georgia. However, EcoMed and Ameco (Dutch company) announced a tender with Netherlands Government support to install and operate medical waste disposal incinerator (including staff training). It is expected to be operational by July.

- EcoMed is working with Ministry of Environmental Protection of Georgia (MoE) on future legislation dealing with medical waste. (MoE contact, Ms. Khatuna Chikviladze, mobile 599107328)

Consultation with Mr. Ramaz Shonia, Lawyer of the Agency for State Regulation of Medical Activities under the MoLHSA (2725410, 2725384 chancellery).

- Classification of medical waste is provided as follows: Class A – safe waste from medical facilities; Class B – hazardous (risky) medical waste; Class C – especially hazardous medical waste; Class D – hazardous medical waste which can be considered as equivalent to hazardous industrial waste; Class E – radioactive medical waste.

- Mr. Shonia was not aware of specific provisions in this particular case, but he said that all operators of the hospitals (including GeoHospitals) should comply with the 17 December 2010 Decree #385 for Rules and Conditions for Licenses on Medical Activities and Permits for Medical Entities. This obliges operators to safely segregate, collect, store, transport, and process and/or dispose of medical waste in accordance with legislative requirements.

Consultation with Mr. Tengiz Plavinski from the Nuclear and Radiation Safety Service of the Ministry of Energy and Natural Resources of Georgia (MoENR) (phone +995 32 2727263).

- Mr. Plavinski was confident that they know all potential sources and that there are no radioactive materials in Zestaponi medical faculties. While it is unlikely that there is any radioactive waste in Zestaponi, it is suggested that the X-ray radiography unit be inspected for photochemicals and lead screens.

Consultation with Mr. Alexander Mindorashvili, Division of Water Resources Management, Department of Integrated Environmental Management, Ministry of Environment Protection of Georgia (MoE) (599-47-97-80).

- Mr. Mindorashvili formerly served as the key staff member of the Sanitary Epidemiology Supervision Inspection of MoLHSA (now abolished). He expressed concern that TB and infections disease medical centers should not be used for IDP housing because they would require substantial resources for thorough disinfection.

- He raised concern about lead screens in X-ray facilities and advised inspection by a radiology expert. He also expressed concern with mercury containing equipment such as thermometers. In the past, disposal of broken thermometers was not taken care properly.

Appendix 8.8 Site Visit Assessment Report for Rehabilitation of Hospitals, Clinics and Medical Service Buildings for IDP Housing

TETRA TECH

APPENDIX 8.8

Site Visit Assessment Report for Rehabilitation of Hospitals, Clinics and Medical Service Buildings for IDP Housing

The following document was prepared by Tetra Tech EM, Inc. (http://www.tetratech.com).

DISCLAIMER

This report is made possible by the support of the American People through the United States Agency for International Development (USAID). The contents are the sole responsibility of Tetra Tech EM, Inc. and do not necessarily reflect the views of USAID or the United States Government.

MUNICIPAL INFRASTRUCTURE AND IDP HOUSING REHABILITATION PROJECT

Component1IDP Housing Rehabilitation: Hospitals assessment report revised

CONTRACT: AID-EDH-I-00-08-00027-00, TASK ORDER: AID-114-TO-11-00002

17 January 2012

The following document was prepared by Tetra Tech EM, Inc. (http://www.tetratech.com).

DISCLAIMER

This report is made possible by the support of the American People through the United States Agency for International Development (USAID). The contents are the sole responsibility of Tetra Tech EM, Inc. and do not necessarily reflect the views of USAID or the United States Government.

Engineering Report
Tetra Tech
Municipal Infrastructure and IDP Housing Rehabilitation Project

Summary of Hospitals, Clinics and Medical Service Site Visit Reports

Date: 01.17.2012

Prepared by: Temur Levanishvili
Reviewed by: Givi Varduashvili
Approved by: J. Fredericks

Subject: IDP Housing Rehabilitation

Re: Ministry of Economy and Sustainable Development Letter to Ministry of Internally Displaced Persons from the Occupied Territories, Accommodation and Refugees dated 8 November 2011 regarding rehabilitation of the real estate with providing long term housing for IDPs and further transferring that property into ownership.

Summary:
There are 36 hospitals on the MRA proposed list. MDF rejected 7 hospitals. Tetra Tech made site visits and inspected the remaining 29 hospitals. Of the 29 hospitals visited by Tetra Tech, 17 were found suitable for rehabilitation as IDP housing. Tt recommends rejection of 12 of 29 hospitals; 9 because of structural reasons, 1 is privatized, 2 are occupied.

Purpose:
Site Visits to conduct visual inspection of Hospital buildings to investigate structural integrity and potential for rehabilitation under GMIP.

Background:
Under the USAID/Georgia Municipal Infrastructure and IDP Housing Rehabilitation Project (GMIP) Component 3 sub-component 2 IDP Durable Housing Buildings, the project will provide durable housing solutions for IDPs from 1990s Conflict by rehabilitating up to 2600 apartments ($26 million). In addition to the original list of buildings identified by Ministry of Refugees (MRA) for rehabilitation (GEO Ltd Environmental Scoping and Small Feasibility Study for the IDP Settlements), MRA in September 2011 proposed a list of 36 hospitals for rehabilitation as IDP housing. Ministry of Economy approved this list in November 2011. After initial review Municipal Development Fund (MDF) rejected 7 of the hospitals on the list. USAID requested Tetra Tech to conduct site visits and assess the remaining 29 hospitals.

Methodology:

Tetra Tech conducted site visits to the 29 hospitals during several field trips between November 11 to January 12 (TR1 22-26 November 2011); TR2 19-23 December 2011; TR3 3- 6 & 9-11 January 2012; TR4 other Trip reports). During the site visits the Tetra Tech engineering team met with relevant hospital officials; checked the occupancy status of the buildings; inspected the structural

condition of the buildings; surveyed the connection to municipal gas, water supply, sewage, and power systems; reviewed biohazard issues; and took site photos & GPS location points.

Findings/Results:

1. There are 36 hospitals on the MRA proposed list.
2. MDF rejected 7 hospitals.
3. Of the remaining 29 hospitals on the list, Tetra Tech has visited 29.
4. Of the 29 hospitals visited by Tetra Tech, 17 were found suitable for rehabilitation as IDP housing.
5. Tt recommends rejection of 12; 9 because of structural reasons, 1 is privatized, 2 are occupied.

Recommendations/Follow-up:

1. Designs should be carried out to determine actual rehabilitation requirements, layout of building interiors, and accurate costs.
2. Designs and estimate should be carried out to determine accurate costs and layout of the exteriors for the buildings to include communications, electric, gas, sewage & water supply hook ups, trash collection areas, landscaping, grounding, play grounds, access roads, parking, lighting, etc.
3. One of the 19 hospitals visited in Tkviavi has a one floor extension that is structurally unstable and is condemned for rehabilitation, but the main building is recommended for rehabilitation.
4. All site visits trip reports are attached below:

Tetra Tech GMIP

Trip Report

(TR1)

Date: 22-26 November 2011

Purpose: Site Visit to conduct visual inspection of 14 Hospital buildings to investigate structural integrity and potential for rehabilitation under GMIP**.**

Location: Imereti Region

Participants (Tetra Tech): Teimuraz Levanishvili, Givi Varduashvili, Mamuka Shaorshadze.

Summary of Issues Discussed/Decisions Taken:

1. A total of 14 Hospital buildings were inspected in four days.
2. The results of the survey & inspection information are stated in the report which follows.
3. Site visits were only visual in nature and no other inspection techniques were used components of performed inspection are included in this report
4. All 14 hospitals and clinics are still being used for medical services.
5. Four of the buildings are structurally unstable (they are also leased for 11 months):
    1) Ltd "Dispensary of Skin-Venereal Diseases and Tuberculosis", 90 Agmashenebeli str, Chiatura;
    2) Stock Company "S. Khundadze Medical Sanitary Department", 20 G. Chanturia str. Chiatura.
    3) Ltd "Chiatura City Policlinic" 90 Agmashenebeli str, Chiatura;
    4) Chiatura, Maternity Hospital (Agmashenebeli Street N90).
6. 11 inspected buildings are in relatively good condition and could be rehabilitated to provide suitable IDP housing.
7. Three out of the 11 buildings that are in good structural condition will be combined and their status needs to be verified by the Enterprise Management Agency of the Ministry of Economy and Sustainable Development of Georgia. (Alexandre Khojevanishvili – Head of Enterprise Management Agency):
    1) Ltd "Regional Blood Bank", 5 Varlamishvili Str. Kutaisi;
    2) Ltd "Tuberculosis Hospital", 20 Chkhobadze str. Kutaisi;
    3) Ltd "O. Chkhobadze Treatment and Rehabilitation Clinical Centre for Disabled and Old People", 16 Tolbukhin str. Kutaisi.
8. 3 of the 11 hospital buildings that are in good structural condition have been leased for 11 months.
    1) Ltd "Mukhadze City Hospital", 90 Aghmashenebeli str. Chiatura;
    2) Ltd "Central Policlinic", 14 Rustaveli str. Zestafoni;
    3) Ltd "Dental Policlinic", 14 Rustaveli str. Zestafoni.
9. 4 out of 11 hospitals that are in good structural condition are likely to be leased as well, though the status needs to be defined:
    1) Regional Hospital Ltd "Janmrteloba", 21 Solomon II str. Khoni;
    2) Regional Policlinic Ltd "Eskulape", 21 Solomon II str. Khoni;

3) Ltd "Emergency Service", 21 Solomon II str. Khoni;
4) Ltd "Healthcare Service for Tskhaltubo Citizens", 16 Eristavi str. Tskaltubo.

10. Estimated rehab price for hospitals: from USD 220/m2 to USD 300/m2; with an average of 250/m2.

Recommendations/Follow-up:

6. All the facilities visited are functioning and fully operable medical hospitals, with doctors, nurses, administrators and patients. We would suggest caution and careful consideration should be given to removing these facilities from that use. Procedures for relocating current occupants and medical services should be provided by GoG.
7. Designs should be carried out to determine actual rehabilitation requirements, layout of building interiors, and accurate costs.
8. Designs and estimate should be carried out to determine accurate costs and layout of the exteriors for the buildings to include communications, electric, gas, sewage & water supply hook ups, trash collection areas, landscaping, grounding, play grounds, access roads, parking, lighting, etc.
9. Ownership status (Privatization) should be verified.

GENERAL GEOGRAPHICAL AREA OF SITE VISITS

The following map shows the general area of the sites that were visited during this inspection:

TRIP & INSPECTION REPORT—NOVEMBER 22-26, 2011

TEIMURAZ LEVANISHVILI, GIVI VARDUASHVILI, MAMUKA SHAORSHADZE

OVERALL RESULTS OF INSPECTIONS

The table below presents the overall results of the site inspections. One fact should be pointed out with respect to these particular units: They are all functioning and fully operable medical hospitals, with doctors, nurses, administrators and patients. We would suggest caution and careful consideration should be given to removing these facilities from that use. The results are as follows:

BUILDINGS FOR VISUAL INSPECTION

	Building	Approx Size-M²	Size of Grounds hectares	Water	Sewer	Gas	Elec	Yr Const	Hcp Access	Good Features	Problem Features
1	Chiatura Maternity Hospital (operational) 3 floors	2500	0.5 ha	✓	✓	✓	✓	1937	✓	• Metal roof • Const: brick & plaster • Elevator currently is operational	• Roof drainage poor • Damp in basement • Metal roof cover need to be replaced
2	Chiatura City Hospital (operational) 9 floors	6084	0.2 ha	✓	✓	N/A	✓	1986	✓	• 4 Elevators, 1- is operational • Const: block & plaster • Building has own water supply line • Relatively Normal interior condition	• Poor roof condition • Some Doors and windows are messing • 3 Elevators must be repaired

3	Khoni Regional Hospital LTD "Janmrteloba" (operational) 4 floors	4984	3 ha	✓	✓	N/A	✓	1969	No	• Const: brick & plaster • Bearing structure is in good condition	• Basement full of trash • Roof is in poor condition • Electrical system is out of any standards
4	Khoni Regional Medical Clinic LTD "Eskulape" 1 floor	658		✓	✓	N/A	✓	1969	✓		
5	Khoni Ambulance Station LTD 2 floors	1500		✓	✓	N/A	✓	1969	✓		
6	Tskhaltubo City Hospital 5 floors	4400	0.2 ha	✓	✓	N/A	✓	1989	✓	• Bearing structure is in good condition	•Roof is covered with asbestos cement sheets •Elevator shift is empty

7	Zestaphoni Central Dental and Medical Clinic 4 floors	3840	0.02 ha	✓	✓	N/A	✓	1985	✓	• Bearing structure is in good condition	• Front corner of building has a vertical cracks • Roof poor condition
8	Kutaisi LTD Medical Clinic N4 6 floors	8150	0.3 ha	✓	✓	N/A	✓	1989	✓	• Bearing structure is in good condition	• Roof is in poor condition
9	Kutaisi LTD Regional blood bank 3 floors	2000	0.125 ha	✓	✓	✓	✓	?	✓	• Bearing structure is in good condition • Interior of the building is in good condition	• Second floor is privatized and occupied by currently operational Medical Clinic

ADDITIONAL INFORMATION AND PHOTOS OF EACH SITE

(1) Chiatura, Maternity Hospital (Agmashenebeli Street N90)

GPS Coordinates 001 (UTM/WGS 84): X= 358897; Y= 4682973

Person Interviewed: Manager – Tsiuri Saralidze (cell: 599 10 33 49)

Note: According to obtained information in Chiatura city new Hospital for 25 patients is in construction process, 10 of 25 spaces is considered for the Maternity Hospital which is not enough for the fast growing region so additional building need to be provided for currently functional Maternity Hospital.

Building is rented by “Geohospital” LTD for 11 months.

Conclusion: Building is structurally unsound and condemned for rehabilitation.

(2) Chiatura, City Hospital (Agmashenebeli Street N90)

GPS Coordinates 002 (UTM/WGS 84): X= 358912; Y= 4683027

Person Interviewed: Manager – Emzar Kapanadze (cell: 593 33 00 34)

Note: Currently building does not have gas supply. Gas could be provided from the existing pipeline located 50m away from the building. Hospital has the alternative building built for relocation.

Building is rented by “Geohospital” LTD for 11 months.

Conclusion: Building is structurally sound, performance of rehabilitation work is reasonable.

(3) Khoni - Regional Hospital LTD "Janmrteloba" (Solomon II Street N21)

(4) Khoni - Regional Medical Clinic LTD "Eskulape" (Solomon II Street N21)

(5) Khoni - Ambulance Station LTD (Solomon II Street N21)

GPS Coordinates 003 (UTM/WGS 84): X= 287992; Y= 4689506

004 (UTM/WGS 84): X= 287947; Y= 4689492

005 (UTM/WGS 84): X= 288032; Y= 4689554

Person Interviewed: Manager – David Rukhadze (cell: 579 10 14 14)

Note: Currently building does not have gas supply. Gas could be provided from the existing pipeline located 100m away from the building. The building basement was designed as a civil defense shelter (bunker). Hospital has the alternative building built for relocation.

Building is rented by "Chemi Ojaxis Eqimi" LTD for 11 months.

Conclusion: Building is structurally sound, performance of rehabilitation work is reasonable.

(3) Khoni - Regional Hospital LTD "Janmrteloba" (Solomon II Street N21)

(4) Khoni - Regional Medical Clinic LTD "Eskulape" (Solomon II Street N21)

(5) Khoni - Ambulance Station LTD (Solomon II Street N21)

(6) Tskhaltubo, City Hospital (Eristavi Street N16)

GPS Coordinates 006 (UTM/WGS 84): X= 303466; Y= 4687888

Person Interviewed: Deputy of Director (cel: 598 21 47 19)

Note: Currently building does not have gas supply. Gas could be provided from the existing pipeline located 100m away from the building. There is no WWTF.

There is new hospital built for relocation.

Building is rented by “Block Georgia” LTD and “Aldagi” Insurance company for 11 months.

Conclusion: Building is structurally sound, performance of rehabilitation work is reasonable.

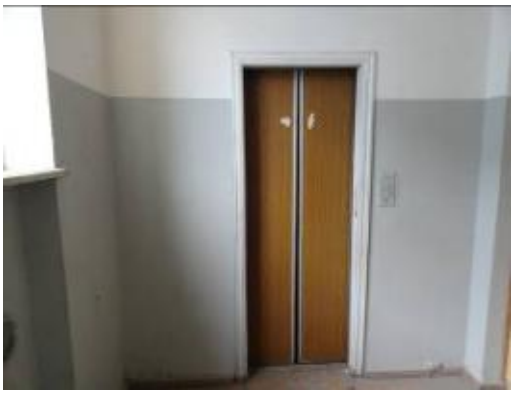

(7) Zestaphoni Central Dental and Medical Clinic (Rustaveli Street N6)

GPS Coordinates 007 (UTM/WGS 84): X= 338055; Y= 4663548

Person Interviewed: Managers: Sopio Gambarashvili (cel: 599 95 51 88), Valeri Ninikashvili (cel: 599 77 55 23)

Note: Currently building does not have gas supply. Gas could be provided from the existing pipeline located 20m away from the building. Front corner of the building has vertical cracks on both sides, because of poor connection of brick column to the bearing column of the structure additional reinforcement by using metal brackets is required.

There is alternative building for relocation.

Building is rented by “Geohospitals” LTD for 11 months.

Conclusion: Building is structurally sound, performance of rehabilitation work is reasonable.

(7-1) Zestaphoni Central Dental

(7-2) Zestaphoni Medical Clinic

(8) Kutaisi, LTD Medical Clinic N4 (Nikea Street N46 b)

GPS Coordinates 008 (UTM/WGS 84): X= 309101; Y= 4678495

Person Interviewed: Director – Bejan Mamageishvili (cel: 599 41 86 10)

Note: Currently building does not have gas supply. Gas could be provided from the existing pipeline located 500m away from the building. There are 4 IDP families, 9 persons. There are 2 elevator one of them is operational. Building has two entrances, according to the information from the Director medical clinic could be placed on first and second floor; four other floors could be used for IDP housing after rehabilitation.

Conclusion: Building is structurally sound, performance of rehabilitation work is reasonable.

(9) Kutaisi, LTD Regional Blood Bank (Varlamishvili Street N5)

GPS Coordinates 009 (UTM/WGS 84): X= 310696; Y= 4682671

Person Interviewed: Head of Medical personal – Nana Lobjanidze (cell: 599 50 18 33)

Note: This is 3 floor building. First and third floors belong to the Blood Bank. Second floor is privatized (owner – Malvina Babukhadia, cell: 599 49 46 80).

Conclusion: Building is structurally sound, performance of rehabilitation work is reasonable.

Notes: Our team was directed to perform visual structural inspection of the buildings: “Medical rehabilitation center” LTD (Tolpukhini street N16), “Tuberculosis Hospital” LTD (Chkhobadze street N20). We have interviewed Goga Gabidzashvili – financial manager (cell: 577 34 73 73). According to this information some other medical units (Regional Blood Bank, Medical rehabilitation Centre and Tuberculosis Hospital) will be moved in that building. Our request for structural inspection was denied. This unclear situation should be addressed to Ministry of Economics (Head of department - Alexander Khojevanishvili Enterprise Management Agency).

“Medical rehabilitation center” LTD (Tolpukhini street N16)

GPS Coordinates 010 (UTM/WGS 84): X= 305349; Y= 4680894

“Tuberculosis Hospital” LTD (Chkhobadze street N20)

GPS Coordinates 011 (UTM/WGS 84): X= 305296; Y= 4680885

Notes: Due to extremely poor condition of the buildings listed below were condemned for rehabilitation work:

01. Chiatura - **Tuberculosis** Hospital (Agmashenebeli Street N90), Managers: Inna Viushkina (cell: 599 36 97 47), Mukhran Khvedelidze (cell: 591 24 23 42).

02. Chiatura - Medical Clinic (Giorgi Chanturia N20), Managers: David Tabagua (cell: 577 14 51 45), Jambul kurtkhalia (cell: 599 53 89 75).

The buildings are structurally unsound.

Building is rented by “Geohospitals” LTD for 11 months.

03. Chiatura - Ltd “Chiatura City Policlinic” (Agmashenebeli Street N90)

GPS Coordinates 012 (UTM/WGS 84): X= 359010; Y= 4683032

Chiatura - Medical Clinic (Giorgi Chanturia N20)

GPS Coordinates 013 (UTM/WGS 84): X= 357470; Y= 468283

Tetra Tech GMIP

Trip Report

(TR2)

Date: 19-23 December 2011

Purpose: Site Visit to conduct visual inspection of 9 Hospital buildings to investigate structural integrity and potential for rehabilitation under GMIP.

Location: Kakheti Region, Mtskheta-Tianeti Region, Shida Khartli Region, Samtskhe-Javakheti Region, Imereti Region

Participants (Tetra Tech): Teimuraz Levanishvili, Mamuka Shaorshadze.

Summary of Issues Discussed/Decisions Taken:

11. A total of 9 Hospital buildings were inspected in six days.
12. The results of the survey & inspection information are stated in the report which follows.
13. Site visits were only visual in nature and no other inspection techniques were used components of performed inspection are included in this report
14. Three out of 9 buildings are structurally unstable and condemned for rehabilitation:
    5) **Dusheti, Regional Clinic** (Agmashenebeli Street N71)
    6) **Kvishkheti, Ambulatory**
    7) **Zestaponi, Tub dispenser** (Tamar mepe street #27)
15. Tkviavi, Hospital, the two floor main building is in relatively good condition and could be rehabilitated to provide suitable IDP housing, **one floor building extension is structurally unstable and condemned for rehabilitation**.
16. Estimated rehab price for hospitals: from USD 220/m2 to USD 250/m2; with an average of 235/m2.

Recommendations/Follow-up:

10. Designs should be carried out to determine actual rehabilitation requirements, layout of building interiors, and accurate costs.
11. Designs and estimate should be carried out to determine accurate costs and layout of the exteriors for the buildings to include communications, electric, gas, sewage & water supply hook ups, trash collection areas, landscaping, grounding, play grounds, access roads, parking, lighting, etc.

GENERAL GEOGRAPHICAL AREA OF SITE VISITS

The following map shows the general area of the sites that were visited during this inspection:

TRIP & INSPECTION REPORT—DECEMBER 19-23, 2011

Teimuraz Levanishvili, Mamuka Shaorshadze

OVERALL RESULTS OF INSPECTIONS

The results are as follows:

BUILDINGS FOR VISUAL INSPECTION

	Building	Bldg Size- (M$^{2)}$	Size of Grounds (ha)	Water	Sewer	Gas	Electricity	Yr Const	Hcp Access	Good Features	Problem Features
1	Gurjaani Regional Hospital (operational) 6 floors 2 floors	17070	4.5 ha					1979		• Building is structurally sound • 80% of doors and windows are metal plastic. • Elevator currently is operational	• Poor roof drainage • Damp in basement
2	Dusheti Clinic (operational) 2 floors	2212	0.8 ha			N/A		1950			• Some parts of the construction is damaged • Asbestos-slate roofing
3	Mukhrani Med Service	900	0.23 ha	N/A	N/A	N/A		?	No	• Construction : thick wall blocks • Bearing structure is in good condition	• Asbestos-slate roofing • Roofing is damaged and leaking

	Building	Bldg Size- (M$^{2)}$	Size of Grounds (ha)	Water	Sewer	Gas	Electricity	Yr Const	Hcp Access	Good Features	Problem Features
	(operational) 2 floors										
4	Kaspi Regional Hospital (operational) 7 floors	4200	0.24 ha			N/A		1994		• Building is structurally sound • Elevator is operational	• Roof is leaking
5	Zestaponi Central Hospital 4 floors	9500	3.0 ha			N/A		1966		• Main building is structurally sound	• Roof is leaking • "Beeline" dish is arranged on the roof
6	Zestaponi Tub dispenser 2 floors	430	0.07ha			N/A		1940		• Surfaced with tuff	• Roof is leaking • Asbestos-slate roofing • The building is structurally unsound

	Building	Bldg Size- (M$^{2)}$	Size of Grounds (ha)	Water	Sewer	Gas	Electricity	Yr Const	Hcp Access	Good Features	Problem Features
7	Kvishkheti Ambulatory 2 floors	600	0.08 ha	N/A	N/A	N/A		1985			• Roof is leaking • Asbestos-slate roofing • Reinforced concrete ring beam is not arranged • Foundation is lowered • Walls are cracked
8	Tkviavi Hospital 2 floors 1 floor	1600	0.02 ha					1985		• Two story building is structurally sound	• Roof is in poor condition • One story building should be demolished • No alternative space
9	Borjomi Maternity House 2 floors	620	0.3 ha					1972		• Bearing structure is in good condition • Interior of the building is in good condition • 50% of windows are metal plastic	• Heated with electric stoves • Asbestos-slate roofing • Roof is leaking at some sections • Walls are damp

ADDITIONAL INFORMATION AND PHOTOS OF EACH SITE

(1) Gurjaani, Regional Hospital (Agmashenebeli Street N144)

GPS Coordinates 001 (UTM/WGS 84): X= 564824; Y= 4621573

Person Interviewed: Head of Infrastructure Division of Gurjaani Municipality - Irakli Mindiashvili (cell: 577 955 400), Chief Specialist of the Division – Valeri Avalashvili (cell: 577 955 433), Chief Doctor of the Hospital – Gela Orvelashvili (cell: 599 576 516), Field Employee of the Hospital - Eduard Sijchenko (cell: 574 791 891), Manager of the Emergency Service of the Hospital - Manana Berikashvili (599 260 385), Manager of Infection Diseases Hospital - Gulnara Gonashvili (cell: 577 426 840).

Note: The hospital is functioning at the moment.

1st floor – administration, reanimation, reception;
2nd floor – Division of Children's Therapy; 80 m^2 of the space were rented by a collage and the rent agreement is out of date at the moment;
3rd floor – Traumatic Department;
4th floor – Roentgenoscopy (x-ray);
5th floor – Division of sterilization;
6th floor – Surgery, operating room

We have obtained the general plan of the buildings, located on the area.

Explication (building which are located separately on the territory):

1. Main building (2845 m^2)
2. Power supply (709 m^2)
3. Maintenance Unit (728 m^2)
4. Pathologist-Anatomic block (305 m^2)
5. Boiler house (340 m^2)
6. Watch post (14 m^2)
7. Transformer boot (52 m^2) 400 KW
8. Room for generator (17 m^2)

Plot area - 45000 m^2, Planting trees – 5010 m^2

"GPI Holding" is constructing a 3 story hospital for 70 beds which is planned to be finished by March 31, 2012. Renting period for "GEO Hospital" expires on March 31, 2012, after which the above mention site will be returned in the property of Government.

Conclusion: Main building is structurally sound, performance of rehabilitation work is reasonable. Arrangement of playground and stadium is possible.

(2) Dusheti, Regional Clinic (Agmashenebeli Street N71) (Ex Stalini Street)

GPS Coordinates 002 (UTM/WGS 84): X= 474258; Y= 4659577

Person Interviewed: Head of Infrastructure Department of Dusheti Administration - Gia Sukhiashvili (cell: 598 317 277), Chief Specialist of Legal Department of Dusheti Administration – Dimitri Dimuashvili (cell: 598 179 679), Chief Doctor of the Policlinic - – Mediko Kvatashuri (cell: 555 606 174), Manager of the Policlinic in charge of accounting - – lia Cherqezishvili (cell: 555 246 944), Senior Doctor of "Geo Hospital" of Dusheti - Zaza Kavtaradze (cell: 577 090 019), Director of Public Healthcare of Dusheti Municipal Centre - Tamar Andriashvili (cell: 599 949 569).

Note: The hospital is functioning at the moment.

The first floor of the building is occupied by:

1. Roentgenoscopy; X ray room, Registry, Clinical laboratory, Administration, dental room, Municipal Service of Public Healthcare;

2. Oncology room, Senior nurse, Physiology room, Drug addiction specialist, Neuro-pathologist, Pediatrician, Therapist, Endocrinologist, rooms for cardiology of procedural analyses for tuberculoses, Urology, oculist, gynecologist, surgeon and vaccination;

We have obtained general plan of the Policlinic and plan of the floors, as well as copy of the contract agreement signed between Dusheti Policlinic and director of Ltd "Geo Hospitals" for renting the hospital for 11 months. The contract is signed on September 16, 2011.

Conclusion: The building is structurally unstable.

(3) Mukhrani, Med Service (12th Street #100)

GPS Coordinates 003 (UTM/WGS 84): X= 465154; Y= 4643339

Person Interviewed: Gamgebeli of the village Mukhrani - Besik Bichiashvili (cell: 599 534 774), Staff of the Medical Service, who are private persons and occupy the half wing of the first floor of the building (4 rooms). The above mentioned space is not their property:

Kenchuashvili Nana (cell: 593 581 889), nurse - Liana Zariashvili (cell: 593 927 205), doctor - Qetevan Kalandadze (cell: 551163 650), nurse - Liana Klusidze (cell: 555 413 563), doctor - Ketevan Razmadze (cell: 593 508 393), nurse - Lia Chekurashvili (cell: 598 139 247).

Refugees from Abkhazia, living in the building: Chairman - Nino Kvarackhelia (cell: 579 182 559), resident: Saltanat Tcerediani (cell: 595 130 369)

Note: Nine households and 22 individuals are living in the building. The building is supplied with the water; there is a well outside the building which supplies the tank and the building gets water from the tank. The well is not equipped with the pump; “Medical Service” has a gas supply, though refugees are not supplied with gas. The roofing is arranged with two slope asbestos – cement which is damaged.

Conclusion: Building is structurally sound, performance of rehabilitation work is reasonable.

(4) Kaspi, Regional Hospital (Ex Stalini Street) – Saakadze Street #110

GPS Coordinates 004 (UTM/WGS 84): X=452422; Y= 4641088

Personal Interview: Head of Infrastructure Division of Kaspi Municipality – Zurab Beritashvili (cell: 577 954 910), Chief Doctor of the Hospital - Begi Tatrishvili (cell: 574 884 003).

Note: It is a 7 story building and is no functioning at the moment.

The units which are functioning temporarily:

1. Therapeutic and Surgical Reception Divisions
2. Surgical Division
3. X ray room.

The building was rented by Ltd "Alpha" up to March 1st, 2012. New two story hospital for 25 beds has been built by "Alpha Clinic" at the place. Staff of the Hospital moved to the newly constructed building and emptied the old one.

On the right side of the facade of the hospital there is an unfinished construction which would had been the part of the hospital. The frame of the building (5 floors) is constructed already. On the left side of the façade there is a half destroyed one floor old building which should be destroyed.

Conclusion: Building is structurally sound, performance of rehabilitation work is reasonable.

(5) Zestaponi, Central Hospital (Uznadze Street# 142)

GPS Coordinates 005 (UTM/WGS 84): X= 339071; Y= 4664347

Person interviewed: Head of Economic and Infrastructure Service of the Municipality - Mikhail Potskhverashvili (cell: 599 601 070, 551 994 343), Security guard of Ltd “Irao” -– Davit Chulukhadze (cell: 593 442 929).

Note: As a result of our inquire we have found out, that the Central Hospital of Zestafoni is not on the balance sheet of the Municipality but is the property of the Ministry of Economy . The building is empty at the moment. The site is watched by safety guard of Ltd “Irao”. There are 880 IDPs in Zestafoni, living separately or in collective centers.

The building has flat roofing, the roof is leaking at some sections. “Beeline” dish is installed on the roof. It is possible to construct playground and stadium around the building.

Conclusion: Building is structurally sound, performance of rehabilitation work is reasonable.

(6) Zestaponi, Tub dispenser (Tamar Mepe Street #27)

GPS Coordinates 006 (UTM/WGS 84): X=337952; Y=4663984

Person Interviewed: Head of Economic and Infrastructure Service of the Municipality - Mikheil Potskhverashvili (cell: 599 601 070, 551 994 343), Chief Doctor of Tub Dispenser - Manana Japaridze (cell: 599 215 497).

Note: We have obtained the general plan. Emergency Service and Division of Venereal Diseases are also located at the building. The Tub Dispenser is empty at the moment as staff has moved on: 2 Rustaveli Street in Zestafoni.

The building is located along the road; it was built in 1940 and is heavily amortized. Tub Dispenser used to be the property of the LELP “Enterprise Management Agency” and no it is owned by the Ministry of Economy.

Conclusion: The building is heavily amortized and performance of rehabilitation works is unreasonable.

(7) Kvishkheti, Ambulatory

GPS Coordinates 007 (UTM/WGS 84): X= 376048; Y= 4647078

Person Interviewed: Director of Ltd “Kvishkheti Ambulatory” - Giuli Sutiashvili (cell: 595 736 507).

Note: Ambulatory serves 5000 individuals (Villages: Qvishkheti, Bulbulis Tsikhe, Monastery, Sative, Sarmanishvilis Kari, Tashiskari, Begleti). Alternative space is not available.

It is a 2 story building, Water, gas and Sewerage system is not available. The site has no reinforced concrete ring beam, foundation is lowered at some sections; cracks are also noticeable on the walls. The roof is covered by asbestos-cement; Flooring and roofing is arranged by wooden elements.

Conclusion: Performance of rehabilitation works are not considered reasonable.

(8) Tkviavi, Hospital

GPS Coordinates 008 (UTM/WGS 84): X=422497; Y= 4668979

Person Interviewed: Attorney of Tkviavi Territorial Body - Mikhail Khareli (cell: 577 957 216), Director of Ambulatory of Ltd "Tkviavi Hospital" - Manana Mikhaberidze (cell: 599 957 591), Emergency Service 03 - – Maia Inauri (cell: 599 956 037).

Note: It is a one and two story building. The following units are located on the first floor of two story building side:

1. Emergency Service;
2. Ambulatory;
3. Laboratory;
4. "Three Family Doctor Cabinet"
5. Registry;
6. Surgery room;
7. Gynecology room;
8. Dental room;
9. Physiology room;
10. Administration.

The second floor is the property of the Hospital and is not functioning since 1991.

There is no alternative space for Ambulatory; the building has water supply, it gets water from the tank which is supplied from the well by water pump; the sewerage system is available, though it is out of order; gas and electricity is available.

0.75 ha of area, 5 m away from the façade of the building is in private property.

Detached 1 story building should be demolished.

Conclusion: Two story Building is structurally sound, performance of rehabilitation work is reasonable.

Two story building

One story building

(9) Borjomi, Maternity House (Vashlovani Street #2)

GPS Coordinates 009 (UTM/WGS 84)**: X=368110; Y=4634403**

Person Interviewed: Head of Infrastructure Service of Borjomi - Zurab Kordzaia (cell: 595 908 007), Manager of Maternity House - Jenari Grigalashvili (cell: 599 225 204), Senior Doctor of Central Hospital of Borjomi Medical Union of Ltd "Geo Hospital" - Benyamin Kakabadze (cell: 599 187 033), Technical Manager - Giorgi Tsikharishvili (cell: 577 141 586).

Note: We have obtained general plan of the Maternity House and plans for 1st and 2nd floors. The building is in good condition and it has water, gas, sewerage and electricity supply. Ltd "Geo Hospital" is constructing a new hospital for 25 beds where Central Hospital of the City and Maternity House should be located lately. The building is qualified to be rehabilitated.

The following units are also located on the territory of Maternity House:

1. Central Hospital;
2. Hospital for Infection Diseases;
3. Laboratory and X ray room;
4. Administrative building;
5. Kitchen;
6. Electricity Substation;
7. Boiler House;

We have acquired general plan for all above listed sites as well as plans and photos of all the sites.

Maternity House

Central Hospital

Hospital for Infection Diseases

Tetra Tech GMIP

Trip Report

(TR3)

Date: 03-06/09-11 January 2012

Purpose: Site Visits to conduct visual inspection of 9 Hospital buildings to investigate structural integrity and potential for rehabilitation under GMIP.

Location: Mtskheta-Tianeti Region, Shida Khartli Region, Imereti Region

Participants (Tetra Tech): Teimuraz Levanishvili, Mamuka Shaorshadze.

Summary of Issues Discussed/Decisions Taken:

17. A total of 9 Hospital buildings were inspected in six days.
18. The results of the survey & inspection information are stated in the report which follows.
19. Site visits were only visual in nature and no other inspection techniques were used components of performed inspection are included in this report
20. Three out of 9 buildings are structurally unstable and condemned for rehabilitation:
    8) **Imereti Region, Terjola, LTD "Terjola Regional Policlinic"** (Rustaveli st. #94)

    2) **Shida Kartli Region, Khashuri, Khashuri Hospital,** (Rustaveli st. #38)

    3) **Imereti Region, Terjola, Ambulance station** (Rustaveli st. #118)

21. Estimated rehab price for hospitals: from USD 220/m2 to USD 250/m2; with an average of 235/m2.

Recommendations/Follow-up:

1. Designs should be carried out to determine actual rehabilitation requirements, layout of building interiors, and accurate costs.
2. Designs and estimate should be carried out to determine accurate costs and layout of the exteriors for the buildings to include communications, electric, gas, sewage & water supply hook ups, trash collection areas, landscaping, grounding, play grounds, access roads, parking, lighting, etc.

GENERAL GEOGRAPHICAL AREA OF SITE VISITS

The following map shows the general area of the sites that were visited during this inspection:

TRIP & INSPECTION REPORT— 03-06/09-10 January 2012

Teimuraz Levanishvili, Mamuka Shaorshadze

OVERALL RESULTS OF INSPECTIONS

The results are as follows:

BUILDINGS FOR VISUAL INSPECTION

	Building	Bldg Size- ($M^{2)}$	Size of Grounds (ha)	Water	Sewer	Gas	Electricity	Yr Const	Hcp Access	Good Features	Problem Features
1	Ckhvarichamia Former holiday camp (Occupied) 3 floors	1800	0.05 ha	N/A	N/A	N/A		1968	N/A	• Building structurally stable • Roof covered with metal sheets.	• Poor roof drainage • Damp in basement
2	Tkibuli "Multi-profile Hospital of Tkibuli" 3 floors	4700	0.35 ha			N/A		1987	N/A	• Building structurally stable • 4 Elevators • Building has water storage tanks • Building has own power supply substation	• Some of construction elements are damaged
3	Tkibuli Ambulan	2400	0.3 ha			N/A		1987	N/A	• Building structurally stable • 4 Elevators • Building has water	Some of construction elements are damaged

	Building	Bldg Size- (M$^{2)}$	Size of Grounds (ha)	Water	Sewer	Gas	Electricity	Yr Const	Hcp Access	Good Features	Problem Features
	ce station 3 floors									storage tanks • Building has own power supply substation	
4	Tkibuli "Diagnostic Centre" 2 floors	2400	0.35 ha			N/A		1987	N/A	• Building structurally stable • Building has own power supply substation	• Some parts of the construction are damaged
5	Khashuri Main Hospital 3 floors	3195	0.35 ha			N/A		1969	N/A	• Main building structurally sound • Metal roofing	• Roof is leaking • Some parts of the construction are damaged
6	Terjola "Terjola Regional Policlinic" 2 floors	1765	0.14 ha	N/A	N/A	N/A		1951	N/A		• Extremely poor condition of the building, condemned for rehabilitation.

	Building	Bldg Size- (M$^{2)}$	Size of Grounds (ha)	Water	Sewer	Gas	Electricity	Yr Const	Hcp Access	Good Features	Problem Features
7	Khashuri Khashuri Hospital	2400	0.4 ha			N/A		1936			• Asbestos roofing • Moisture in basement. • Signs of Foundation setting. • Structural bearing system has cracks, building is seismically unstable and condemned for rehabilitation
8	Terjola Terjola Hospital 4 floors	2706	0.7 ha			N/A		1970	N/A	• The building is structurally stable • Access road is in good condition • Construction of the playground and stadium is possible • The building has 40ton water tank.	• During the raining season basement of the building is flooded.
9	Terjola Ambulance station 3 floors	3150	0.3 ha	N/A	N/A	N/A	N/A	1957	N/A		• Building is structurally unstable and condemned for rehabilitation.

ADDITIONAL INFORMATION AND PHOTOS OF EACH SITE

(1) Mtskheta-Mtianeti Region, Village Ckhvarichamia, Former holiday camp.

GPS Coordinates 001 (UTM/WGS 84): X= 492667; Y= 4635827

Person Interviewed: Head of Mtskheta municipality – Khvicha Goderzauli (cell: 551 499 463), inhabitant of the building – Ramaz Gogua (cell: 598 311 520)

Note: In the list sent from GoG this building was listed as a hospital, but during the site visit it was found as the former holiday camp. .

Water supply could be provided from 1km away, main drain line is located 100m away, and village doesn't have the gas supply.

Building is occupied by 25 families (IDP from Abkhazia), total 44 inhabitants. Building has partially damaged metal roofing.

Conclusion: Main building is structurally sound, performance of rehabilitation work is reasonable.

(2) Imereti Region, Tkibuli, "Regional Multi-profile Hospital of Tkibuli", (Tkvarcheli st. #57)

GPS Coordinates 002 (UTM/WGS 84): X=332296; Y= 4688266

Person Interviewed: Deputy of head of the Tkibuli municipality – Paata Gogoreliani (cell: 595 907 707), Head of the economical and infrastructure development department of Tkibuli – Zaza Zosiashvili (cell: 599 273 250), senior specialist of the same department – Zuqri Abesadze (cell: 595 907 742), Guard – Nodari Vaxtangadze – (cell: 551 129 755).

Note: Tkibuli doesn't have the gas supply system, multi profile hospital located in the 3 floor building, has all utilities but gas supply, 3 of 4 elevators are operational, hospital has the power substation which is partially damaged, medical personnel has moved into the new hospital located in the center

of the city, currently some of medical equipment is in building that will be moved out shortly. Ownership of GoG is confirmed by the interviewed persons.

Conclusion: Main building is structurally sound, performance of rehabilitation work is reasonable.

Construction of playground and stadium is possible.

(3) Imereti Region, Tkibuli, Ambulance station, (Tkvarcheli st. #57)

GPS Coordinates 003 (UTM/WGS 84): X=332280; Y= 4688246

Person Interviewed: Deputy of head of the Tkibuli municipality – Paata Gogoreliani (cell: 595 907 707), Head of the economical and infrastructure development department of Tkibuli – Zaza Zosiashvili (cell: 599 273 250), senior specialist of the same department – Zuqri Abesadze (cell: 595 907 742), Guard – Nodari Vaxtangadze – (cell: 551 129 755).

Note: This is the 3 floor extension of multi profile hospital main building, but was listed separately.

Conclusion: Extension of the main building is structurally sound, performance of rehabilitation work is reasonable.

(4) Imereti Region, Tkibuli, LTD "Diagnostic Centre", (Tkvarcheli st. #57)

GPS Coordinates 004 (UTM/WGS 84): X=332211; Y= 4688251

Note: This is the 2 floor extension of multi profile hospital main building, but was listed separately.

Conclusion: Extension of the main building is structurally sound, performance of rehabilitation work is reasonable.

(5) Shida Kartli Region, Khashuri, Main Hospital (Saakadze st. #2)

GPS Coordinates 005 (UTM/WGS 84): X=384615; Y=4650122

Person Interviewed: Head of the economical and infrastructure development department of Khashuri– Ioseb Buadze (cell: 577 950 813), LTD "Khashuris sakvanzo poliklinikuri gaertianeba" Head of medical staff – Elza Menabde (cell: 599 206 890), Manager – Lena Qurdadze (no cell phone).

Note: This is the 3 floor building. The building currently is empty, state ownership is confirmed by the interviewed persons, water supply is provided from the local artesian well. Building has the sewer and power supply system as well, gas supply is available from 20m away from the main building. Roof is covered partially with metal and asbestos sheets. Next to the building there are constructed: Garage, morgue, storage, these structures are privatized.

Extension of the main structure is the 1 floor dining facility, which is structurally unstable and need to be demolished. Other 2 floor extension is connected to the main structure with hallway, this hallway is structurally unstable and need to be demolished as well.

New hospital for 31 patients is constructed in the center of the city.

Conclusion: Main building is structurally sound, performance of rehabilitation work is reasonable.

Arrangement of playground is possible.

(6) Imereti Region, Terjola, LTD "Terjola Regional Policlinic" (Rustaveli st. #94)

GPS Coordinates 006 (UTM/WGS 84): X=333009; Y= 4672172

Person Interviewed: Head of the economical and infrastructure development department of Terjola– Mamuka Liluashvili (cell: 599 739 821), Manager of the new hospital – Otari Makaridze (cell: 595 937 575), Senior technical specialist - Iago Kvantidze (cell: 599 513 675).

Note: This is the 2 floor building constructed about 1951, there is no any utility connections but power supply.

Conclusion: Due to extremely poor condition of the entire structure, building is condemned for rehabilitation.

(7) Shida Kartli Region, Khashuri, Khashuri Hospital, (Rustaveli st. #38)

GPS Coordinates 007 (UTM/WGS 84): X=383982; Y= 4650009

Person Interviewed: Head of the economical and infrastructure development department of Khashuri – Ioseb buadze (cell: 577 950 813), Director of the new hospital – Giorgi miqeladze (cell: 599 185 359), Director of hospital – Zurab Kvirikashvili (cell: 599 540 422), Manager – Roman Marmaridze (cell: 555 937 367).

Note: Building constructed in 1936 year, bearing structure has cracks. Walls and roof are partially damaged, there are signs of foundation sits and high level of moisture, medical personnel has moved into the new hospital, there are some remains of medical equipment.

Conclusion: Due to extremely poor condition of the entire structure, building is condemned for rehabilitation.

(8) Imereti Region, Terjola, Terjola Hospital (Rustaveli st. #69)

GPS Coordinates 008 (UTM/WGS 84): X=333103; Y=4672024

Person Interviewed: Senior specialist of law department – Giorgi gabrichidze (cell: 595 906 870).Head of medical personal – Cicino Khatamadze (cell: 599 289 194), Head of Terjola - Mikheil Kvataia (cell: 595 199 000), Head of the infrastructure development department – Mamuka Liluashvili (cell: 599 739 821), Manager – Iago Kvantidze (599 513 675), New Clinic Manager – Otar Makaridze (cell: 595 937 575).

Note: Medical personal from the Existing building will be moved in to the new structure, Basement of the building gets flooded during the raining season, water pumped out by the existing pump, building is structurally sound, access road is in good condition, building has power and water supply with 40ton water tank, existing elevator is operational. Construction of the stadium and play ground is available nearby of the building. Building was rented by LTD “Geohospital” for 11 months. Moving of medical equipment from the building is in process.

Conclusion: Building is structurally sound, performance of rehabilitation work is reasonable.

(9) Imereti Region, Terjola, Ambulance station (Rustaveli st. #118)

GPS Coordinates 009 (UTM/WGS 84): X=333050; Y= 4672094

Person Interviewed: Head of economical and infrastructure development department of Terjola – Mamuka Liluashvili (cell: 599 739 821), New hospital manager – Otari Makaridze (cell: 595 937 575), Senior technical specialist - Iago Kvantidze (cell: 599 513 675).

Note: This is 3 floor building constructed in 1957 year. Structure doesn't have any utilities installed, bearing structure of the building has significant damages, basement is full of water, replacement of the roofing structure is required.

Conclusion: Building is considered structurally unsound and condemned for rehabilitation.

Tetra Tech GMIP

Other Trip Reports

(TR4)

	Building	Approx Size- M^2	Size of Grounds hectares	Water	Sewer	Gas	Elec	Yr Const	Hcp Access	Good Features	Problem Features
1	Baghati Hospital (operational)	5000	2.5 ha					1968		Metal roof- 2007 Const: brick & plaster	Perimeter sewage system poor Roof drainage poor Damp in basement
2	Samtredia Regional clinic (operational)	3000-3500	2 ha					1951		Existing 4.5Kw gen Const: brick & plaster Flooring intact Metal roof	Poor interior lighting Water press low Door jams & lintels in good shape or repairable Water treatment non-operable Original single glaze windows
3	Kutaisi Hospital Nikea Street (operational)	3500	1 ha			No		?	No	Roof flat-no access Const: brick & plaster	Basement full of sewage Small cracks on 3rd floor 34 households, 137 people living in this building Only fair to poor

ADDITIONAL INFORMATION AND PHOTOS OF EACH SITE

(1) Baghati Hospital

GPS Coordinates 008 (UTM/WGS 84): X= 320007; Y= 4661031

Person Interviewed: technical manager of the hospital: Teimuraz Purtseladze (cell: 599218891)

(2) Samtredia Regional clinic

GPS Coordinates 001 (UTM/WGS 84): X= 280812; Y= 4672249

Person Interviewed: director Dodo Avaliani (cell: 599584781), technical manager Jambul Sturua (cell: 593730348)

(3) Kutaisi Hospital—Nikea Street

GPS Coordinates 003 (UTM/WGS 84): X= 309965; Y= 4679456

Person Interviewed: Coordinator Marina Janadze (Tel: 790480710)

APPENDICES

The following appendices are provided under separate cover.

Appendix 8.9: Water Supply, Sanitation and Drainage Improvements by IDP Cottage Settlement

Appendix 8.10: Water Supply and Drainage Improvements (Cottage Settlements)

Appendix 8.11: Water Quality Test Results (Cottage Settlements)

US Agency for International Development
1300 Pennsylvania Avenue, NW
Washington, DC 20523
Tel: (202) 712-0000
Fax: (202) 216-3524
www.usaid.gov

US Agency for International Development

1300 Pennsylvania Avenue, NW

Washington, DC 20523

Tel: (202) 712-0000

Fax: (202) 216-3524

MUNICIPAL INFRASTRUCTURE AND IDP HOUSING REHABILITATION PROJECT

PROGRAMMATIC ENVIRONMENTAL ASSESSMENT (PEA) FOR IDP DURABLE HOUSING ACTIVITY

CONTRACT: AID-EDH-I-00-08-00027-00, TASK ORDER: AID-114-TO-11-00002
26 August 2011; Revised 30 March 2012

APPENDICES in this Document

Appendix 8.9: Water Supply, Sanitation and Drainage Improvements by IDP Cottage Settlement

Appendix 8.10: Water Supply and Drainage Improvements (Cottage Settlements)

Appendix 8.11: Water Quality Test Results (Cottage Settlements)

Appendix 8.9

Water Supply, Sanitation and Drainage Improvements by IDP Cottage Settlement

No.	Location	# of HH	# of Individuals	Water Supply	Drainage	Storm water discharge receiving source	Inside water connection	Sewage system (network, septic tank with infiltration drain field)	Construction shower and toilet building	New boreholes
0	**1**	**2**	**3**	**5**	**6**	**7**	**8**	**9**	**10**	**11**
1	Akhalsopeli	100	350	Yes	Yes	Collector Trench	Yes	Yes	Yes	1
2	Mokhishi	58	220	Yes			Yes	Yes	Yes	
3	Skra	86	312	Yes			Yes	Yes	Yes	
4	Karaleti	480	1,644		Yes	Collector Trench		No – Pipe replacement only (120m)		
5	Berbuki	134	460	Yes			Yes			
6	Shavshevbi	177	586	Yes			Yes	Yes	Yes	
7	Khurvaleti	139	460	Yes	Yes	On the field	Yes	Yes	Yes	
8	Teliani	54	164		Yes	Collector Trench	Yes			
9	Metekhi	35	128	Yes			Yes			
10	Tsilkani	400	1,093	Yes	Yes	Collector Trench to the river	Yes	Yes	Yes	
11	Frezeti	300	721		Yes	On the field	Yes	Yes	Yes	
12	Tserovani	2,100	5,533							
13	Verkvebi	300	889							
14	Sakhashe ti	100	220							
	Total	**4,463**	**12,780**	**8**	**6**	**3**	**10**	**7**	**7**	1

Appendix 8.10

Water Supply and Drainage Improvements
(Cottage Settlements)

Table of Contents

PART

A. Technical Specifications for Cottage Settlement Improvements
   1) General Specifications
   2) Borehole Specifications

B. Improvements in AKHASOPELI Cottage Settlement

C. Improvements in MOKHISHI Cottage Settlement

D. Improvements in SKRA Cottage Settlement

E. Improvements in KARALETI Cottage Settlement

F. Improvements in BERBUKI Cottage Settlement

G. Improvements in SHAVSHEVBI Cottage Settlement

H. Improvements in KHURVALETI Cottage Settlement

I. Improvements in TELIANI Cottage Settlement

J. Improvements in METEKHI Cottage Settlement

K. Improvements in TSIKANI Cottage Settlement

L. Improvements in FREZETI Cottage Settlement

NOTE: These reports were were submitted to the Municipal Development Fund of Georgia in November 2011. They were developed under the Regional Municipal Infrastructure Development Project (Georgia) by Holinger International Consultants, Berne, Switzerland.

Appendix 8.10 Part A

Rehabilitation of Surface Water Drainage Systems for IDP Settlements in 7 Villages (Gori, Qareli, Kaspi and Mtskheta DS)

1 GENERAL SPECIFICATIONS --- Main Works

SITE LOCATION AND ACCESS

Villages of Gori, Qareli, Kaspi and Mtskheta DS are located in Eastern Georgia is approximately 80-20 km from Tbilisi. Accessing the construction site from Tblisi is possible through Tbilisi-Kutaisi motorway. The IDPs settlements covered by these specifications are located: Villagess Khurvaleti, Skra, Karaleti - in Gori district; Village Akhalsofeli - in Qareli district; Village Teliani - in Kaspi disttict; Villages Tsilkani, Frezeti - in Mtskheta district.

SITE VISIT

Taking into account difference of implemented works, the contractor has the responsibility to visit each site and assure itself that it is fully familiar with site conditions. Each contractor shall inform itself about types and volumes of works, to be sure that offered rates and unit tariffs include all expenses of construction.

GENERAL DESCRIPTION

The Contract main works include:

	WORKS	Unit	Khurvaleti	Skra	Karaleti	Akhalsofeli	Teliani	Tsilkani	Frezeti	Total
1	Cleaning of Drainage Collectors and Road-side Drainage Ditches	M	3087	255	7312	3457	845	15869	16377	47202
2	Construction of Sub-surface Drainage Pipe D=200 mm	m					440			440
3	Construction of 10m length steel pipes (D=325-630 mm) for channel crossings	pcs	14	1	53	19	4	28	21	140
4	Construction of 3 pcs access point bridge over the collector channel (reinforcedconcrete D=2X800mm, L= 6m pipe)	m			36					36

5	Rehabilitacion of Sewerage Network (PE pipe D= 110 mm).	m			120					120

The rehabilitation works may be implemented during various seasons of the year. Correspondingly the seasonal and annual working regime should be envisaged in the construction schedule of the Contractor.

DESCRIPTION OF PRINCIPAL PROJECT SPECIFICATIONS

The following description of the major work to be performed under the Contract is general in nature and does not purport to describe all of the works and facilities to be provided under this Contract.

A. General Works

General Works cover mobilization for the project, construction, provision and maintenance of the office and accommodation facilities, etc.

B. Civil Works

Earth works cover excavation of II and III category earths manually and by machinery and working in earth fill.
Concrete works cover lean concrete, mass concrete and reinforced concrete works. Reinforced concrete mat foundation, foundation beams, pillars, collars, roofing and wall works.
Reinforcement steel works cover all the works of reinforcement with steel smooth and periodic profile shafts and reinforcing nets.
Also Main other works as:

Bill of Quantity of MAIN WORKS

№	Description of Works	Unit	Quantity						
			Khurvaleti	Skra	Karaleti	Akhalsofeli	Teliani	Tsilkani	Frezeti
	I. Drainage Collectors, Ditchis, Structures								
1	Cleaning up the Drainage Collectors and Road side Drainage Ditches from overgrown plants, silt, and construction according design parameters	m^3	840	315	2240	1440	1846	10400	3600
2	Loading of excavated pants, silt and ground on the dumper trunk	m^3	840		2240	1440	1846	10400	3600
3	Remove surplus ground	T	1512		4032	2592	3322	18720	6480
4	Construction of 10m length steel pipes with anticorrosive hydroisolation for channel crossings (D=325*6mm – 78 pcs;	pcs	14	1	53	19	4	28	21

	D=377*7mm – 28 pcs; D= 426*7mm – 8 pcs; D=480*7mm – 12 pcs; D=530*4mm – 3 pcs; D=630*7mm – 11 pcs. Pipes reinforcement: gravel bedding - 127 m^3; B-15 concrete - 405 m^3; reinforcement a-III – 13925 kg.								
5	**Construction of three access point bridge over the Drainage Collector:** installation of reinforced concrete pipe (D=2X800mm, L=6m); Arrangement of 20cm concrete support walls at the head and the end points of the pipe – 4m^3	m			36				
6	**Construction of pedestrian bridge across the River Mejuda, protection of metal casing of water supply pipeline:** მეტალ სტრუცტურე (მეტალ ტუბინგ 60X30 δ =2მმ ტჰიცკნესს) – 550 მ; მეტალ სჰეეტ დეცკინგ (δ =3მმ ტჰიცკნესს) – 50 მ^2; მეტალ პიპე ფორ ადდიტიონალ სუპპორტ (d=300მმ δ =6მმ) - 6მ; პაინტ მეტალ სურფაცეს წიტჰ ანტიცორროსიონ პაინტ (2 ლაყერს) – 150 მ^2; ჩონსტრუცტიონ ოფ 2 ადდიტიონალ სუპპორტს წიტჰ 15 ცონცრეტე –3 m^3; Reinforcement of riverbank with gabions - 6 m^3	**M**			50				
	II. Sub-surface Drainage								
7	Construction of Sub-surface Drainage (Pipe D=200). excavation - 1287 m^3; gravel arrangement -95 m^3; backfilling of the rest part of the ditch with filtration qualitative sand-gravel - 740 m^3;	**M**					440		
8	Preparation of filter: 40-400mm breakestone layer - 70 m^3; 5-20mm brakestone layer - 135 m^3; 1-5mm sand layer 195 m^3	m^3					400		
9	Arrangement of perforated polyethelene PE100 PN10 pipes d200mm	m					440		
10	Construction of round concrete manhole (D=1000mm, H=2,0m), with light cast iron cover. Hhydroisolation of the external surfaces of the manholes with bitmus mastics 2 layers - 98 m^2	pcs					12		
	III. Sewerage Network								

11	Demolition of damaged sewerage PE pipe d=110 mm. and Construction of a new sewerage PE pipe d=110mm.	m			120				
12	Dismantle of existing circular reinforced concrete manhole and Construction New: D=1000mm; H=1.5	pcs			1				
13	Cast iron lid "light" - 2 pcs; Cast iron lid "heavy" – 9 pcs	pcs			11				
14	Elevation of circular reinforced concrete manhole by H=0.5m untill the road level	pcs			20				

TEMPORARY WORKS

General

The Contractor shall procure, furnish, provide and arrange for all the necessary electric power, water and services; be responsible for the construction and maintenance of the necessary access roads, construction camps, offices and warehouses; and perform all other work necessary for completion of the Works described herein in strict conformance with these Specifications.

2. BOREHOLE Specifications

Drilling Techniques and Drilling Media

The drilling technic should warrant the following facts:

- no contamination of the groundwater
- no affection of the groundwater output by plugging the borehole wall
- no smashing of the core material if possible
- the core extraction should be no less than 80% and representative for the corresponding drilling depth.

That signifies:

- drilling is preferable dry (except below groundwater)
- no flush drilling with other means than water and or air (air lift possible)
- no down-the-hole hammer
- no cable tool drilling, only rotary drilling

It will be the responsibility of the Contractor to start drilling at a diameter which will allow the borehole to be completed at the specified diameter. Extra casing of a larger diameter to achieve the depth is considered to be part of the Contractor's Equipment.

When wet drilling is used, two mud tanks or sumps with sufficient capacity in which to mix and hold all drilling fluid shall be used. The flow channel from the bore head to the mud tanks shall be of sufficient length and capacity to allow the flocculation and settling of clays and tailings from the drilling fluid. The mud tanks and flow channel shall be kept clean of flocculated and settled material.

Plumb and Alignment

All bores shall be drilled and cased straight and vertical and all casings and liners shall be set round, plumb and true to line. The purchaser’s representative shall have the right to reject any or all casing which fails to meet this specification and the casing rejected will be removed from the string at the Contractor's expense. Any delays encountered in running casing, considered to be due to the alignment of the borehole, shall be at the Contractor's expense.

Tests for plumpness and alignment must be made after the complete construction of the well and before its acceptance. Additional tests, however, may be made by the Contractor during the performance of the work. No separate payment shall be made for making these tests.

Should the well vary from the vertical in excess of 3% (i.e. >1.20m for 40 m depth), the plumpness and alignment of the well shall be corrected by the Contractor at his own expense. Should the contractor fail to correct such faulty alignment or plumpness, the purchaser may refuse to accept the well and no payment shall be forthcoming.

Sampling

Representative samples of the strata intersected shall be collected over the whole depth, or if the hydro-geologist agrees at least every 2m by whatever method is standard for the drilling technique used. The Contractor must specify his sampling method in his bid document. He will take every possible precaution to guard against sample contamination due to poor circulation, borehole erosion, or caving. The sample shall be bagged, labelled with the bore number depth

increment and stored in a position where it will not be contaminated by site conditions or drilling operations. The Contractor shall supply suitable sample cases and labels as required.

Water samples shall be collected from each well on the completion of development, under the guidance of the site hydro-geologist, in clean, approved containers, which shall be supplied by the Contractor. The samples shall be collected from the pump flow direct into the container, without being allowed to settle first. Each sample shall have the borehole number, date and method of collection indelibly marked on the bottle.

Protection

During the contract period when work is not in progress, the boreholes shall be kept capped in such a manner as to prevent the entrance of foreign material. Any foreign matter shall be removed at the Contractor's own expense. On completion of the borehole, the Contractor shall cut the borehole casing to the required level and weld a PN16 flange to the top. He shall supply and fit a 12mm thick temporary bolted cover plate.

Loss of Borehole

Should by any event (e.g. accident to the plant, characteristics of the ground, jamming of the tools or casing) the satisfactory completion of the Works is not possible, the borehole shall be deemed to be lost and no payment shall be made for that borehole, nor for any materials not recovered there from, nor for any time spent.

Abandonment of Borehole

The purchaser's representative shall have the right, at any time during the progress of the work, to order the abandonment of a borehole. The Contractor shall thereupon remove the plant, withdraw the casing, if applicable, and salvage or attempt to salvage all such materials as he shall be directed, and shall fill and secure the borehole to the satisfaction of the PRep. Payment will be made for the abandoned borehole and abandonment work, except when the abandonment has been necessitated by unacceptable workmanship or other unauthorized action by the Contractor.

Well Development

Production boreholes, on completion of construction, shall be developed to a maximum yield of water, free of suspended materials. Development will be carried out on the instructions and under the supervision of the site hydro-geologist and according to the specifications.

Pumping Tests

The Contractor shall provide all necessary plant and equipment, accessories, tools, materials and labour and shall perform all work necessary to carry out the pumping tests under the guidance of the site hydro-geologist.

The tests to be rendered are the execution of

(a) Multiple discharge rate tests, (according to the specification documents), followed by

(b) Constant discharge rate tests of 48 hours Duration

Appendix 8.10 Part B

AKHASOPELI Settlement

Explanatory Notes&
Particular Technical Specifications

These Explanatory Notes& Particular Technical Specifications refer to the design and procurement of works and supplies for the implementation of the necessary and required quality improvements for the ***surface water drainage system*** and access roads to the IDP Settlement in **Akhasopeli**. Besides, Project aims at usage of Agara Pumping Station, located within the inefficacious well field (6) on the Khashuri water supply main transport pipeline. Part of proposed design measurements will be undertaken according to the lump sum data. The **Akasopeli** Settlement was established after the August 2008 war as an emergency measure to provide a home for internally displaced persons (IDPs). The settlement has 100 houses with approximately 450 residents.

Since the move-in of the IDPs into the new settlements, a number of deficiencies and needs for improvement have been identified which require immediate attention. A detailed site survey was conducted in August 2011 to identify remedial works in terms of water supply, ***surface water drainage system*** and housing, which need priority attention

In **Akhasopeli** (1) settlement, (see DWG 1.1) emergency improvement measures have yet to be defined in detail. The current drinking water well (2) is not sufficient for water supply in terms of quality and quantity. For an improvement of the ***water supply system investigations*** of a potential new borehole site at the right bank of the r.Mtkvari had been selected at initial stage of the design. Finally, decision has been changed and Agara Pumping Station located within the inefficacious well field well-field on the Khashuri water supply main transport pipeline will be used as a main water source of Akhalsopeli settlement. As it was admitted, the ***surface water drainage system, access road improvements*** have been defined and will be part of the present tender, although cost estimates (Bills of Quantities) for water supply system (water intake, pressure pipeline from the well field to design water tower, design 250m ^{3} water tower, sanitary protection fence and etc.) are given in a lump sum.

Principal measures are the cleaning and restoration of the road-side drainage ditches (to be done by the residents themselves), the provision of unobstructed flow at cross roads (by new or rehabilitated steel pipes), and unobstructed discharge to drainage outfall channels and the construction of a collector channel.

An additional item of the tender for Akhasopeli is the improvement of an ***Access Road*** between the motorway and the bridge across Mtkvari River.
Note: The measures relating to cottages rehabilitation and reduction of moisture condensation are dealt with in VOLUME I, covering all settlements.

DWG 1.1 ნახაზი 1.1

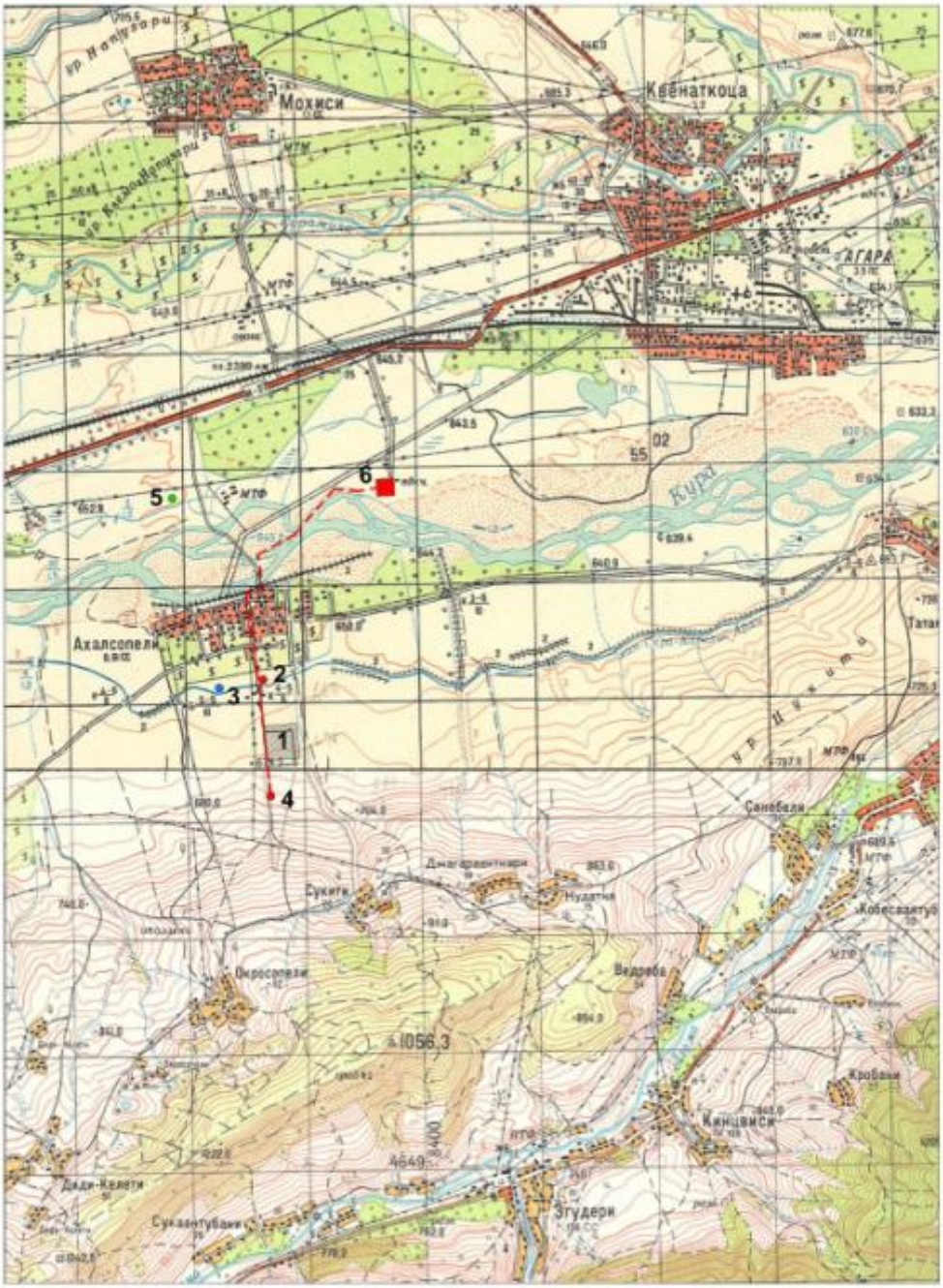

ᲔᲥᲡᲞᲚᲘᲙᲐᲪᲘᲐ

1. დასახლება;
2. არსებული ჭაბურღილი;
3. გეოთერმული აბანო;
4. წყალსაწნეო ავზი;
5. საკვლევი ჭაბურღილი;
6. ხაშურის წყალსადენის გაუქმებული ხაოვე.

EXPLICATION

1. Description;
2. Existing borehole;
3. Geothermal bath;
4. Water Tower;
5. Exploration borehole;
6. Inefficacious of Khashuri Water Supply well-field.

Overview and Precedence

These Explanatory Notes& Particular Technical Specifications (EN&PTS) are an integral part of the Contract Documents and complementary to the other technical sections of the tender documentation. For the purposes of interpretation, the priority of the documents shall be the following:

- Bills of Quantities (BoQ)
- These Explanatory Notes &Particular Technical Specifications (EN&PTS)
- Drawings
- General Technical Specifications (GTS)

The EN&PTS provide specific additional design information and general background to the design decisions taken in the different settlements, and to particular technical requirements for implementation of the works. They thus complement the General Technical Specifications, the Bills of Quantities (BoQ) and the Drawings.

Design Notes

General Situation

The current well is located some 300m to the N of the settlement near the irrigation canal. The water tank and disinfection unit of the public water supply are located some 300m up-hill to the S of the settlement. The supply from the borehole is out of order, because of pump damage. The water supply is done by a spring in the upper part of the gentle slope in the south of the settlement with an actual conductivity of some 1570 µS.
According to the presented design, water supply of Akhalsopeli IDP settlement is proposed from Agara pumping Station located within the inefficacious well-field on Khashuri water supply transport pipeline. It is a horizontal drainage gallery, with a water collector reservoir at the end. Previously Khashuri used to be supplied by 5-6 m deep pump station attached to the aforementioned water collector reservoir. Rehabilitation cost is increased due to the pump station size, required restoration measurements of the construction. With all ensuring consequences, Installation of a submersible pump into the reservoir has been made by consultants. In addition, rehabilitation of a room for electric equipment and a sentry box is proposed inside the same facility. Rather than above highlighted works, arrangement of transformer station and sanitary protection fence is proposed within the scope of presented design. Project also aims at L=5km D=160mm PE water pipeline construction from the well field to the reservoir. In the way the pressure pipe section will be hung on the newly constructed bridge over the river Mtkvari (Steel L= 150 m D= 150 mm pipe)
At the existing reservoir of the IDP's settlement is foreseen reinforced concrete 250 m3 reservoir the construction, as the existing metal tank is out of operation. Herewith sanitary protection fence will be arranged around the reservoir site.
The geometrical difference between the design pump of Agara and design reservoir levels is about 70 m. The total capacity of pump, including pressure lost will be H_{geo}= 90 m.
The pump operation time is expected about 8h per day. Besides, the IDPS settlement, the pump capacity, water pipeline diameter and the volume of design reservoir is foreseen for the nearby existing old village also. For the aforementioned village there will be left a branch with gate valve installed on the outlet pipe of the reservoir from where the water will be taken out

in future. The project foresees setting the UV disinfection unit and installation of water meter in the building.
Assimilation of the inefficacious well field of Khashuri water supply pipeline located in Agara must be undertaken with an intensive pumping out from the inlet reservoir and after getting clean water, chemical and Bacteriological Analysis should be done.

At present there is only insufficient data for the design of the new water supply system available. Pump capacity and power requirements are strongly dependent on parameters that have yet to be assessed. Accordingly a two-staged approach will be required to achieve a sustainable design. In the first stage, covered by the present tender, the exploration of the new well site will be executed. Once the location for the new well is fixed, the water table has been assessed and water quality and quantity have been confirmed to be satisfactory, a detailed design of the required measures will be undertaken.
One of the reasons for unsatisfactory surface drainage is the blockage of drainage ditches at cross roads.
Ditches must be connected across the roads with adequately sized pipes. Existing pipes often are broken, deformed and blocked. Often, there are not piped underpasses at all.
Currently, cement or steel pipes have been used. They are set very close to the road surface, and laid into the gravelly material of the road without concrete envelope. As a consequence, most of the pipes are damaged or completely destroyed.
The access road from the motorway to Akhasopeli has aleady been started. The main body of the roadway between the highway and the new bridge is finished (coarse gravel), and the road is drivable, although on a rather rough surface. The finalization of the first part of the road from the motorway to the bridge at Mtkvari river includes a hard topping of the existing road body.

Surface water design flows

For the detailed design parameters and hydraulic calculations for storm water flows, please refer to annex 3.

Civil Works

Road-side Drainage Ditches

As has been emphasised in the IISR, road-side drainage ditches are the “backbone” of the surface water drainage system within the settlements. In general, they are not maintained and working according to design. They are usually partly filled up, overgrown, partially blocked or otherwise obstructed.
It is proposed that all road-side ditches must be cleaned out and **rehabilitated by the residents**. Residents of cottages are to undertake the work along the full length of their property. Cleaning must be repeated regularly, at least twice a year (before the rainy seasons). The ditches must be restored and maintained to their design dimensions and hydraulic capacity.

Ditch dimensions:	min. depth	0.40 m
	min. bottom width	0.40 m
	min. top width	0.40 m

Figure 1: Road with drainage ditches (Cross Section, original design)

Drainage ditches must not be obstructed at access points to individual properties. Access must be provided by bridging the ditch (e.g. with concrete slab, wooden boards, steel sheets) or by placing a pipe (min. diameter 0.30 m).

Steel Pipes for crossing of roads

For unobstructed water flow in drainage ditches at crossing roads, heavy duty steel pipes are to be placed. They must be properly laid with the gradient identical to the drainage ditches on a properly prepared concrete base course.
For best structural integrity and protection, the pipes should be laid and packed in concrete of at least 15 cm thickness over the full width of the road. At inflow and outflow points, the airside surfaces of the concrete must be smoothed and rounded.

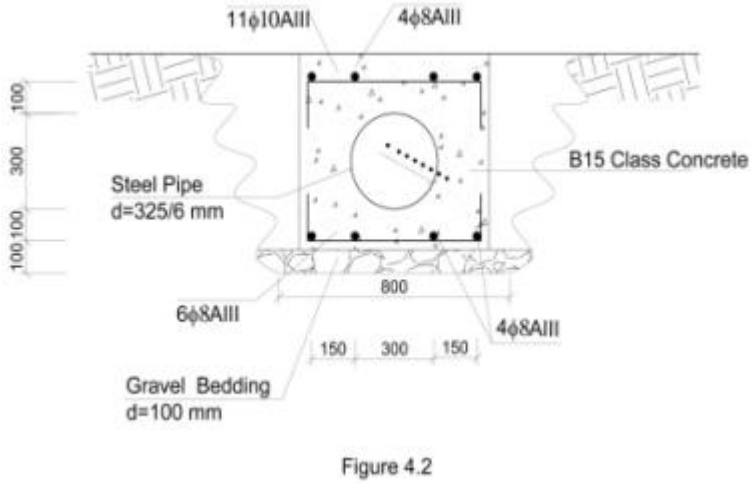

Figure 2: Steel Pipe (Cross Section)

Backfilling and compacting must be done with care and without heavy vibration equipment. Care must be taken to fix the pipe such that it will not dislodge from the set position due to pouring of concrete or to backfilling and compacting of gravel.
Surplus excavation material shall be spread and planed on the road.

Pipe dimensions:	Outside diameter/wall thickness:	323.9/5.6 to 406.4/6.3 mm
	Material:	black steel (St 37)
	Pipe surround:	concrete (at least 15 cm thickness on all sides of the pipe)
	Standard length	7.0 m

Collector Drainage Channel

The Territory of Village Axalsopeli has a slope from the south to the north, subsequently all the road-side drainage ditches are directed from the south to the north, and at the end of the village collector channel crossings shall be constructed. All the village surface waters are collected in the trapeze cross shape outlet channel, the max. dimensions in the slight elevation section in the basis is 0,6m, the height of the channel is 0,9m and the elevation equals 1:1. The whole length of the outlet channel is l =518m
The surface water of this channel flows into the existing large channel on the north –side of the village.

Recommendations of Crossing of Road Side Ditches to Access House Plots

Several options of channel crossings are given below. Unit prices for above discussed measurements are not included into BOQ, but recommendations only. Existence of various options has been dictated by following reasons. Existing channel crossing provided local residents by themselves are done in different way, hence represented options will make them possible to select adequate one.

Option -I

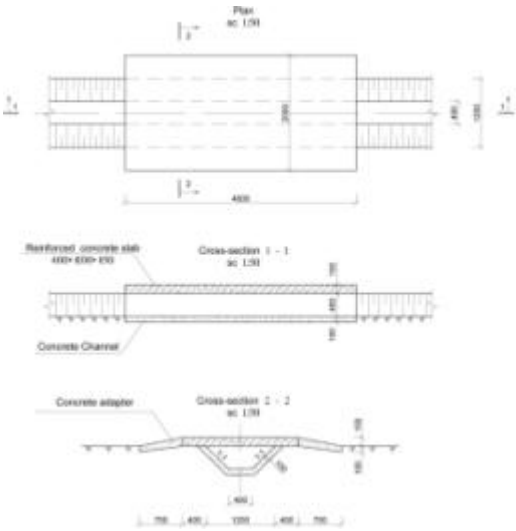

Figure 4.3

The given option-I for crossing of road side ditch is advantageous for the hydraulic regime. Drawing of crossing road side ditch is conditionally made for 400mm height drainage. As for the other heights of the drainage ditch there should be proper alternations of the cross dimensions. The given drawing has recommendation content and it isn't considered in the BOQ, as it would be done by the plot owner with his own expenses.

Option II

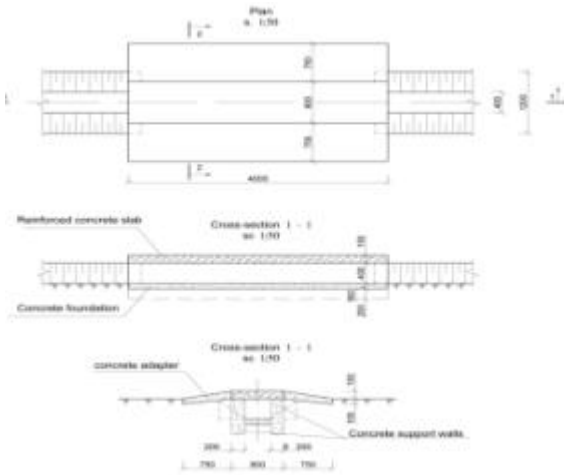

Figure 4.4

Option III

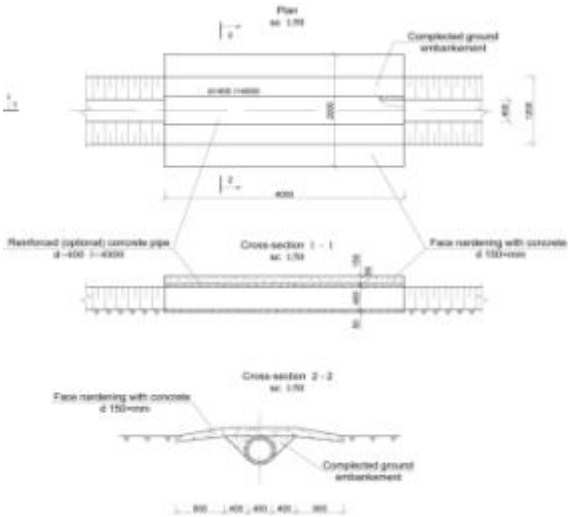

Figure 4.5

Access Road

For the design, explanatory notes and technical specifications of the access road please refere to annex 4 for the report and details.

Mechanical & Electrical Works

The detailed design and the description of the works will be presented at phase II.

ANNEX 1 – Recommended improvement Measures

Water Supply

Based on presented design, water supply of Akhalsopeli IDP settlement is proposed from Agara pumping Station located within the inefficacious well-field on Khashuri water supply transport pipeline. It is a horizontal drainage gallery, with a water collector reservoir at the end.

According to the design W=250m ^{3} Water Tower and the WS network will be supplied from the reservoir via submersible pump and the pressure water supply pipeline (L=5km D=160mm PE WS pipe).

SURFACE WATER DRAINAGE

- Clean out and restore road-side drainage ditches (should be done by residents themselves).
- Provide for unobstructed water flow at cross roads and perimeter road. Provide new steel pipes (300 mm diameter, L= 7 m) where necessary to under-cross the East side perimeter road. The pipes should be strong enough to withstand expected traffic loads. Inlet and outlet points must be properly fixed with concrete.
- Construct a collector channel along perimeter road on the lower end of the settlement.

ROAD REHABILITATION

- According to clarified TOR: levelling out of existing coarse road surface with suitable fine gravel mixture, and the asphalting of the road, ensuring the surface to have a slight roof pitch for optimal drainage.

Annex 2 – AkhasopeliWater SupplyHydraulic Scheme
Schematic Recommended improvement measures
according to Initial Investigation Survey Report (IISR):

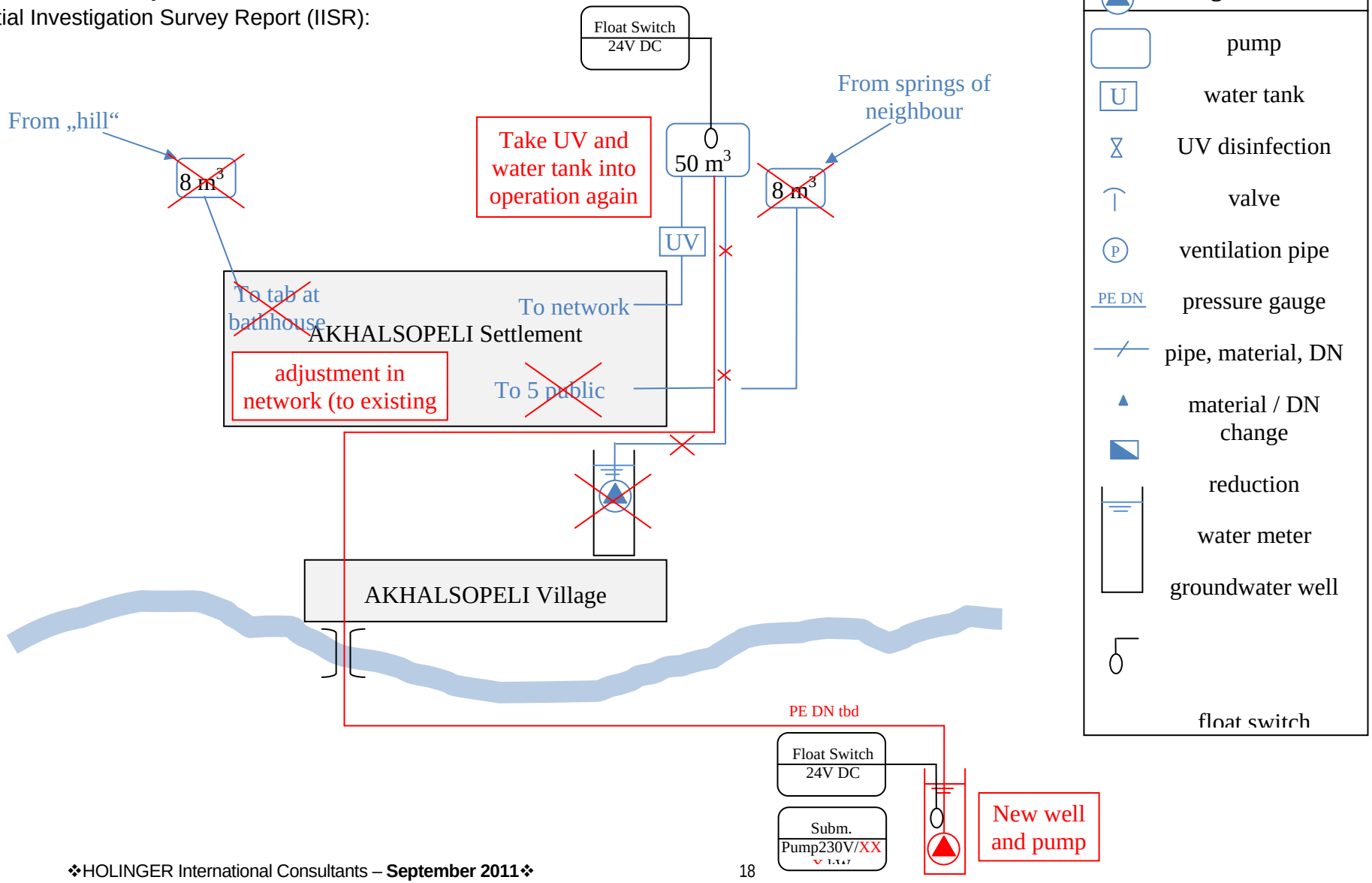

Appendix 8.10 Part C

MOKHISHI Settlement

Explanatory Notes&
Particular Technical Specifications

These Explanatory Notes & Particular Technical Specifications refer to the design and procurement of works and supplies for the implementation of the necessary and required quality improvements in **Mokhisi** IDP's settlement in the water supply system.

The **Mokhisi** Settlement was established after the August 2008 war as an emergency measure to provide a home for internally displaced persons (IDPs). The settlement has 58 houses with approximately 232 residents.

Since the move-in of the IDPs into the new settlements, a number of deficiencies and needs for improvement have been identified which require immediate attention. A detailed site survey was conducted in August 2011 to identify remedial works in terms of water supply, drainage and housing, which need priority attention.

In **Mokhisi** settlement, emergency improvement measures focus on the ***water supply system only***. Principal measures are the replacement of pipework and fittings, the increase of pumping capacity and repair works to the disinfection unit, water reservoir and insulation.

Note: The measures relating to cottages rehabilitation and reduction of moisture condensation are dealt with in VOLUME I, covering all settlements.

Overview and Precedence

These Explanatory Notes & Particular Technical Specifications (EN&PTS) are an integral part of the Contract Documents and complementary to the other technical sections of the tender documentation. For the purposes of interpretation, the priority of the documents shall be the following:

- Bills of Quantities (BoQ)
- These Explanatory Notes & Particular Technical Specifications (EN&PTS)
- Drawings
- General Technical Specifications (GTS)

The EN&PTS provide specific additional design information and general background to the design decisions taken in the different settlements, and to particular technical requirements for implementation of the works. They thus complement the General Technical Specifications, the Bills of Quantities (BoQ) and the Drawings.

Design Notes

General Situation

The well, water tank and disinfection unit of the public water supply are located on the West side of the settlement.

The existing well in Mokhisi is 60 m deep with a steel casing with an inner diameter of 160 mm. The existing well shall be equipped with a new three phase submersible pump.

The water quality and quantity of the well is sufficient. The capacity of the existing pumps has to be increased to satisfy the settlements requirements. The water supply system is equipped with an UV-disinfection unit, which is connected to the power supply, but not working. In order to make ready-to-use a replacement lamp and starter shall be installed under this contract.
The mechanical works include the replacement of pipework, valves and fitting and the installation of mechanical water meters.

Water Supply

For the detailed design parameters and values for water consumption, pump capacity, tank sizes, etc. please refer to table in annex 1.

Disinfection Units

In a separate house close to the water reservoir is a UV-Disinfection Unit installed. The system is connected to the mains supply, but not operational. In order put the UV-Disinfection system back into working order, the UV-Lamp and the starter shall be replaced.

The existing system is a Wedeco Type Proxima 10 UV-Lamp including AQUADAUV control unit. As there is an existing system, which is in need of repairs, spare parts for the unit already installed must be provided and installed under this contract.

A list of spare parts including part numbers is included in the relevant BoQ section.

Tests on Completion

The contractor has to conduct and fulfill the following tests on completion of the work:

- First filling of water tank to proof its water tightness, including cleaning and disinfection with a chloride solution
- Pressure test of new pipes according to the requirements defined in the GTS, including flushing and disinfecting with chloride solution
- Micro-biological water quality analyses before and after both, the new and the existing UV-disinfection unit

- After installation of water meter and pressure gauge to discharge pipe from the well, but before the water meter is connected to the pipe from the well to the water tank:
  Measure water quantity measured by flow meter after 1, 2 and 5 minutes, indicate pressure shown on pressure gauge. Calculate average flow rate of the three measurements in l/min.
- After completion of all installation and connection of water meter to pipe from well to water tank:
  Measure water quantity measured in flow meter after 1, 2, 5, 30 and 60 minutes, indicate pressure shown on pressure gauge. Calculate average flow rate of the five measurements in l/min.
- Test of function of dry-run protection and level switches by removing probe from well or disconnecting cable from terminals

Unsuccessful tests have to be repeated after the problem has been identified and fixed to the contractors expenses.
These tests have to be included in the offered unit rates of the corresponding works if no separate position for the tests are foreseen in the BoQ.

Only after the handing over of the successful test results the work is considered to be completed and final payment will be made.

Training and Maintenance

The contractor shall instruct to the responsible persons from the settlement on the following issues:

- Existing and new UV-disinfection units, including operation manual with contact addresses
- Operation and functionality of water meters, pressure gauges, valves and water tank

The costs for this trainings and manuals have to be included in the unit costs of the corresponding works if no separate position in the BoQ is foreseen.

The contractor also has to state proposed maintenance periods and required works according to the BoQ.

For training regarding pumps please refer to GTS for more details.

Annex 1 - Design parameters water supply

Design of Potable Water Supply Improvement and Surface Water Drainage for the IDP's Settlements in 8 Villages, Georgia

Design Parameters Water Supply - Summary

version: 2.3

	Berbuki	Khurvaleti	Skra	Shavshebi	Shavshebi	Karaleti	Mokhisi	Akhalsopeli	Metheki
Water demand				**existing**	**required**				
Population	536	566	344	606	900	2000	232	450	150
No. of Houses	134	139	86	177	177	480	58	100	35
Daily per capita consumption [l]	265	265	265	265	265	265	265	265	265
Daily average water consumption [m3	**142**	**150**	**91**	**161**	**239**	**530**	**61**	**119**	**40**
Peak factor	1.5	1.5	1.5	1.5	1.5	*no measures*	1.5	1.5	1.5
Max. daily water consumption	**213**	**225**	**137**	**241**	**358**	*required*	**92**	**179**	**60**
Pump / Supply									
Supply time [h]	14	14	14	13 - 16	14	---	14	tbd	14
max. flowrate [m3/h]	10.1	10.7	6.5	10 - 12	17.0	---	4.4	tbd	2.8
max. flowrate [l/s]	2.82	2.98	1.81	2.77 - 3.33	4.73	---	1.22	tbd	0.79
selected pump capacity [l/s]	**2.80**	**3.00**	**1.80**	**existing pump**	**4.80**	**---**	**1.20**	**tbd**	**0.80**
pump head [m]	21.40	36.30	24.35	tbd	tbd	---	27.30	tbd	25.24
selected pump type	submersible borehole pump	submersible borehole pump	submersible borehole pump	existing: submersible borehole pump	existing: submersible borehole pump	*no measures required*	submersible borehole pump		submersible borehole pump
pump discharge pipe, PE100, PN 10	**DN 75, ID 66.0**	**DN 75, ID 66.0**	**DN 75, ID 66.0**	**DN 63, ID 55.4**	**DN 63, ID 55.4**	**---**	**DN 63, ID 55.4**	**tbd**	**DN 63, ID 55.4**
Length pump discharge pipe [m]	12.00	41.00	45.00	existing pipe	existing pipe	---	34.00	tbd	38.00
Water Tanks									
Existing tank size [m3]	50	50	50	50	50	no measures	25	50	25
Tank capacity of avg. consumption	35%	33%	55%	31%	21%	required	41%	42%	63%
Designed tank size [m3]	***50***	***50***	***50***	***100***	***100***	***---***	***25***	***50***	***25***
Designed tank capacity of avg. cons.	35%	33%	55%	62%	42%	---	41%	42%	63%
Remarks:	Tank size shall be between 33% and 50% of average daily consumption to allow supply during daily peak hours								

General remarks:

Length of pump discharge pipes estimated --> to be verified by contractor, but little influence on head loss only

Karaleti --> no measures

Akhasopeli --> new borehole, no data yet

Shavshebi --> at the moment there are only two thirds of the people living in Shavshvebi as the water supply system originally was designed for. subsequently it is not proposed to increase pump capacity at the moment. If with the proposed measures the supply system can not satisfy the demand in future, a 2-stage pump test of the borehole needs to be carried out and assessed, if the well capacity is big enough to install a pump with a bigger pump capacity.

Annex 2 - Design parameters Electrical Installations

Design Parameters Electricty Supply - Summary

	Berbuki	Khurvaleti	Skra	Shavshebi	Karaleti	Mokhisi	Akhasopeli	Metheki
Electrical Devices*								
Established. Capacity [kW]	2.30	3.10	2.30			1.20		0.85
Reqd. Capacity [kW]	2.30	3.10	2.30			1.20		0.85
Estimated Power [A]	4.12	5.60	4.12			2.15		1.52
Voltage [V]	380/220	380/220	380/220			380/220		380/220
Lightning								
Established. Capacity [kW]	0.40	0.40	0.40			0.40		0.40
Reqd. Capacity [kW]	0.40	0.40	0.40			0.40	*to be assessed after exploration of borehole*	0.40
Estimated Power [A]	1.98	1.98	1.98			1.98		1.98
Voltage [V]	220	220	220	*existing*	*no measures required*	220		220
TOTAL								
Established. Capacity [kW]	**2.70**	**3.50**	**2.70**			**1.60**		**1.25**
Reqd. Capacity [kW]	**2.70**	**3.50**	**2.70**			**1.60**		**1.25**
Estimated Power [A]	**6.10**	**7.58**	**6.10**			**4.13**		**3.50**
Supply Cable (Transformer - Site)								
Length [m]	500	100	300			500		500
Cross-section [mm2]	**25**	**10**	**25**			**25**		**25**

* Electrical Devices: Pumps and Disinfection Systems

Annex 3 - MOKHISI PUMP Schematic

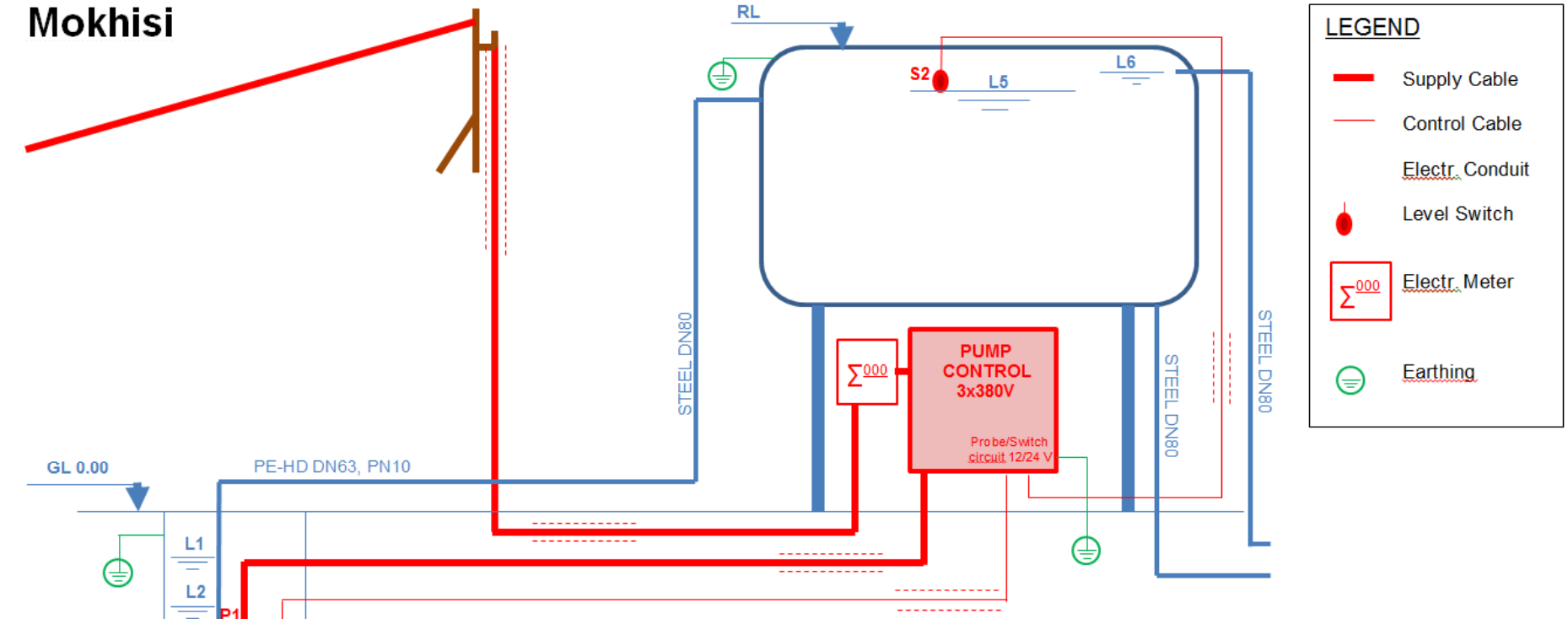

Pump
3x380 V ;
50 Hz ;
Q= 1.2 l/s
@ 27.30 m

L1: Static Water Level = -7.35 m
L2: Dynamic Water Level = -12.00 m
L3: Low-Level Well = -28.80 m
L4: Pump Level = -30.00 m
L5: High-Level Reservoir = L6 – 0.15 m
L6: Overflow-Level Reservoir = tba

S1	S2	P1		
0	0	**0**	Sx = 1	Probe submerged
0	1	**0**	Sx = 0	Probe not submerged
1	0	**1**	P1 = 1	Pump on
1	1	**0**	P1 = 0	Pump off

Notes: The reservoir is internally embroidered; depending of switch type an additional ground probe may be required
S1: Delay ON S2: Delay ON/OFF

Appendix 8.10 Part D

SKRA Settlement

Explanatory Notes&
Particular Technical Specifications

These Explanatory Notes& Particular Technical Specifications refer to the design and procurement of works and supplies for the implementation of the necessary and required quality improvements in **Skra** IDP's settlementin the water supply system.

The **Skra** Settlement was established after the August 2008 war as an emergency measure to provide a home for internally displaced persons (IDPs). The settlement has 86 houses with approximately 344 residents.

Since the move-in of the IDPs into the new settlements, a number of deficiencies and needs for improvement have been identified which require immediate attention. A detailed site survey was conducted in August 2011 to identify remedial works in terms of water supply, drainage and housing, which need priority attention.

In **Skra** settlement, emergency improvement measures focus on the ***water supply system***. Principal measures are the replacement of pipework and fittings, the increase of pumping capacity and repair works to the disinfection unit, water reservoir and insulation.

Note: The measures relating to cottages rehabilitation and reduction of moisture condensation are dealt with in VOLUME I, covering all settlements.

Overview and Precedence

These Explanatory Notes& Particular Technical Specifications (EN&PTS) are an integral part of the Contract Documents and complementary to the other technical sections of the tender documentation. For the purposes of interpretation, the priority of the documents shall be the following:

- Bills of Quantities (BoQ)
- These Explanatory Notes &Particular Technical Specifications (EN&PTS)
- Drawings
- General Technical Specifications (GTS)

The EN&PTS provide specific additional design information and general background to the design decisions taken in the different settlements, and to particular technical requirements for implementation of the works. They thus complement the General Technical Specifications, the Bills of Quantities (BoQ) and the Drawings.

Design Notes

General Situation

The well, water tank and disinfection unit of the public water supply are located in the southadjacent to the settlement. The well lies in a distance of approx. 40 to 50 meters to the tank.
The existing well in Skra is 70 m deep with a steel casing with an inner diameter of 160 mm. The new pump shall be a three phase submersible pump, which will be installed in the existing well.
The water quality and quantity of the well is sufficient. The capacity of the existing pumps has to be increased to satisfy the settlements requirements. The water supply system is equipped with an UV-disinfection unit, which is not readily connected. In order to make ready-to-use the control unit has to be connected to a power supply.
The mechanical works include the replacement of pipework, valves and fitting and the installation of mechanical water meters.
In the Consultant's view, there are no additional, externally financed measures necessary fordrainage improvements in Skra settlement. The problematic issues must be dealt with by thecommunity on the operational level.

Water Supply

For the detailed design parameters and values for water consumption, pump capacity, tank sizes, etc. please refer to table in annex 1.

Disinfection Units

In a separate house close to the water reservoir is a UV-Disinfection Unit installed. The UV-Disinfection System (WedecoProxima Type 10) is not yet connected to the power supply. There is no switchboard installed in the disinfection house. A switchboard has to be provided and installed under this contract. The existing disinfection system shall be connected to the new switchboard.

Tests on Completion

The contractor has to conduct and fulfill the following tests on completion of the work:

- First filling of water tank to proof its water tightness, including cleaning and disinfection with a chloride solution
- Pressure test of new pipes according to the requirements defined in the GTS, including flushing and disinfecting with chloride solution
- Micro-biological water quality analyses before and after the UV-disinfection unit
- After installation of water meter and pressure gauge to discharge pipe from the well, but before the water meter is connected to the pipe from the well to the water tank:

Measure water quantity measured by flow meter after 1, 2 and 5 minutes, indicate pressure shown on pressure gauge. Calculate average flow rate of the three measurements in l/min.

- After completion of all installation and connection of water meter to pipe from well to water tank:
  Measure water quantity measured in flow meter after 1, 2, 5, 30 and 60 minutes, indicate pressure shown on pressure gauge. Calculate average flow rate of the five measurements in l/min.
- Test of function of dry-run protection and level switches by removing probe from well or disconnecting cable from terminals

Unsuccessful tests have to be repeated after the problem has been identified and fixed to the contractors expenses.

These tests have to be included in the offered unit rates of the corresponding works if no separate position for the tests are foreseen in the BoQ.

Only after the handing over of the successfultest results the work is considered to be completed and final payment will be made.

Training and Maintenance

The contractor shall instruct to the responsible persons from the settlement on the following issues:

- UV-disinfection units, including operation manual with contact addresses
- Operation and functionality of water meters, pressure gauges, valves and water tank

The costs for this trainings and manuals have to be included in the unit costs of the corresponding works if no separate position in the BoQ is foreseen.

The contractor also has to state proposed maintenance periods and required works according to the BoQ.

For training regarding pumps please refer to GTS for more details.

Annex 1- Design parameters water supply

Design of Potable Water Supply Improvement and Surface Water Drainage for the IDP's Settlements in 8 Villages, Georgia

Design Parameters Water Supply - Summary

version: 2.3

	Berbuki	Khurvaleti	Skra	Shavshebi	Shavshebi	Karaleti	Mokhisi	Akhalsopeli	Metheki
Water demand				**existing**	**required**				
Population	536	566	344	606	900	2000	232	450	150
No. of Houses	134	139	86	177	177	480	58	100	35
Daily per capita consumption [l]	265	265	265	265	265	265	265	265	265
Daily average water consumption [m3	**142**	**150**	**91**	**161**	**239**	**530**	**61**	**119**	**40**
Peak factor	1.5	1.5	1.5	1.5	1.5	*no measures*	1.5	1.5	1.5
Max. daily water consumption	**213**	**225**	**137**	**241**	**358**	*required*	**92**	**179**	**60**
Pump / Supply									
Supply time [h]	14	14	14	13 - 16	14	---	14	tbd	14
max. flowrate [m3/h]	10.1	10.7	6.5	10 - 12	17.0	---	4.4	tbd	2.8
max. flowrate [l/s]	2.82	2.98	1.81	2.77 - 3.33	4.73	---	1.22	tbd	0.79
selected pump capacity [l/s]	**2.80**	**3.00**	**1.80**	**existing pump**	**4.80**	**---**	**1.20**	**tbd**	**0.80**
pump head [m]	21.40	36.30	24.35	tbd	tbd	---	27.30	tbd	25.24
selected pump type	submersible borehole pump	submersible borehole pump	submersible borehole pump	existing: submersible borehole pump	existing: submersible borehole pump	*no measures required*	submersible borehole pump		submersible borehole pump
pump discharge pipe, PE100, PN 10	**DN 75, ID 66.0**	**DN 75, ID 66.0**	**DN 75, ID 66.0**	**DN 63, ID 55.4**	**DN 63, ID 55.4**	**---**	**DN 63, ID 55.4**	**tbd**	**DN 63, ID 55.4**
Length pump discharge pipe [m]	12.00	41.00	45.00	existing pipe	existing pipe	---	34.00	tbd	38.00
Water Tanks									
Existing tank size [m3]	50	50	50	50	50	no measures	25	50	25
Tank capacity of avg. consumption	35%	33%	55%	31%	21%	required	41%	42%	63%
Designed tank size [m3]	***50***	***50***	***50***	***100***	***100***	***---***	***25***	***50***	***25***
Designed tank capacity of avg. cons.	35%	33%	55%	62%	42%	---	41%	42%	63%
Remarks:	Tank size shall be between 33% and 50% of average daily consumption to allow supply during daily peak hours								

General remarks:

Length of pump discharge pipes estimated --> to be verified by contractor, but little influence on head loss only

Karaleti --> no measures

Akhasopeli --> new borehole, no data yet

Shavshebi --> at the moment there are only two thirds of the people living in Shavshvebi as the water supply system originally was designed for. subsequently it is not proposed to increase pump capacity at the moment. If with the proposed measures the supply system can not satisfy the demand in future, a 2-stage pump test of the borehole needs to be carried out and assessed, if the well capacity is big enough to install a pump with a bigger pump capacity.

Annex 2 – Design parameters Electrical Installations

Design Parameters Electricty Supply - Summary

	Berbuki	Khurvaleti	Skra	Shavshebi	Karaleti	Mokhisi	Akhasopeli	Metheki
Electrical Devices*								
Established. Capacity [kW]	2.30	3.10	2.30	*existing*	*no measures required*	1.20	*to be assessed after exploration of borehole*	0.85
Reqd. Capacity [kW]	2.30	3.10	2.30			1.20		0.85
Estimated Power [A]	4.12	5.60	4.12			2.15		1.52
Voltage [V]	380/220	380/220	380/220			380/220		380/220
Lightning								
Established. Capacity [kW]	0.40	0.40	0.40			0.40		0.40
Reqd. Capacity [kW]	0.40	0.40	0.40			0.40		0.40
Estimated Power [A]	1.98	1.98	1.98			1.98		1.98
Voltage [V]	220	220	220			220		220
TOTAL								
Established. Capacity [kW]	**2.70**	**3.50**	**2.70**			**1.60**		**1.25**
Reqd. Capacity [kW]	**2.70**	**3.50**	**2.70**			**1.60**		**1.25**
Estimated Power [A]	**6.10**	**7.58**	**6.10**			**4.13**		**3.50**
Supply Cable (Transformer - Site)								
Length [m]	500	100	300			500		500
Cross-section [mm2]	**25**	**10**	**25**			**25**		**25**

* Electrical Devices: Pumps and Disinfection Systems

Annex 3 –SKRA PUMP Schematic

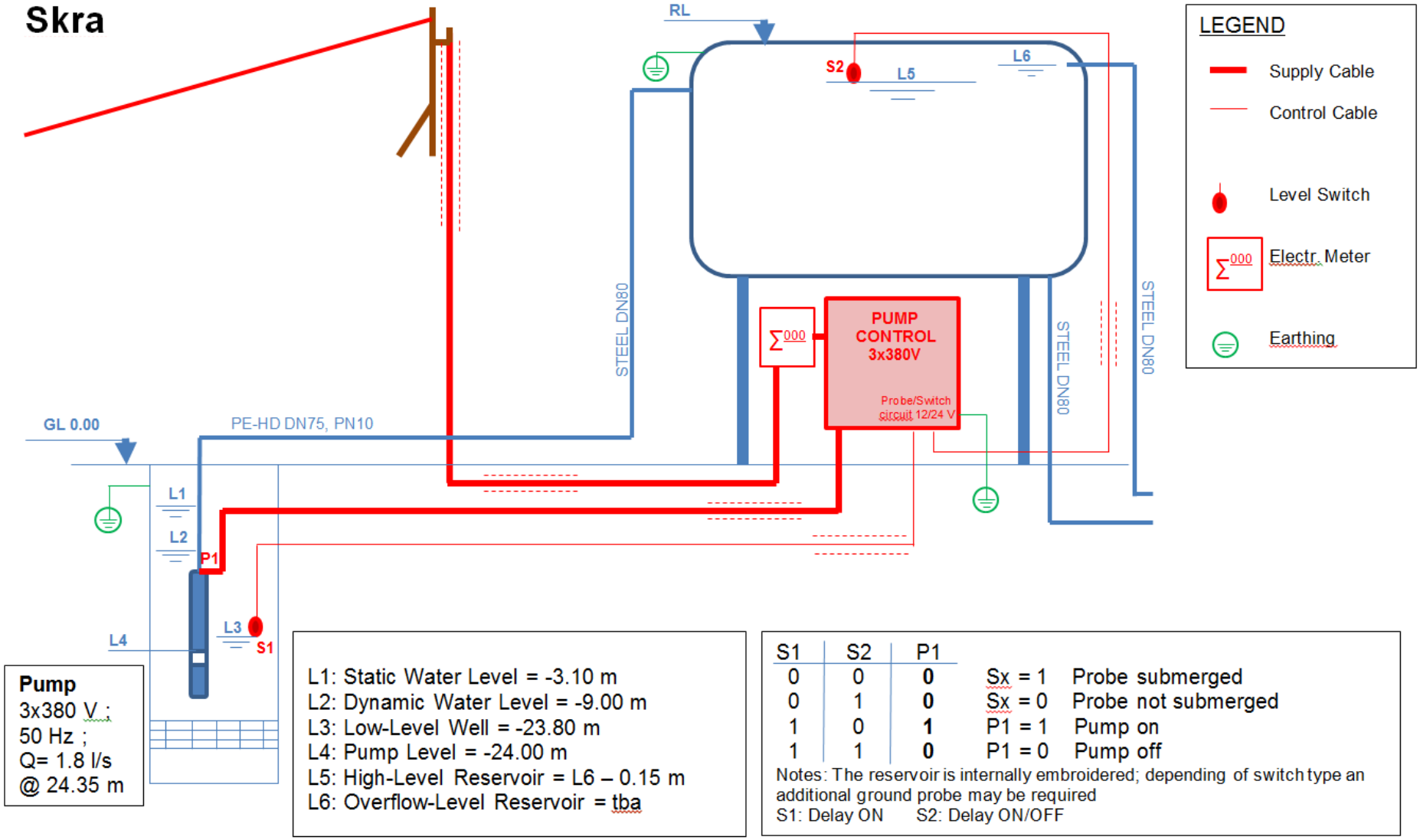

Appendix 8.10 Part E

KARALETI Settlement

Explanatory Notes&
Particular Technical Specifications

These Explanatory Notes & Particular Technical Specifications (EN&PTS) refer to the design and procurement of works and supplies for the implementation of the necessary and required quality improvements in **Karaleti** IDP's settlements in the water supply system.

In **Karaleti** which actually consists of two neighboring settlement, emergency improvement measures focus mainly on ***the surface water drainage system, the sewer system, and, to lesser extent, on thewater supply system***. Principal measures are the rehabilitation and improvement of the surface water drainage system, the rehabilitation of sewer control chamber structures. Additionally, the TOR called for an analysis of the drinking water quality.

In **Annex 1**, the results of the laboratory analysis are shown.

Note: The measures relating to cottages rehabilitation and reduction of moisture condensation are dealt with in VOLUME I, covering all settlements.

Overview and Precedence

These Explanatory Notes & Particular Technical Specifications (EN&PTS) are an integral part of the Contract Documents and complementary to the other technical sections of the tender documentation. For the purposes of interpretation, the priority of the documents shall be the following:

- Bills of Quantities (BoQ)
- These Explanatory Notes &Particular Technical Specifications (EN&PTS)
- Drawings
- General Technical Specifications (GTS)

The EN&PTS provide specific additional design information and general background to the design decisions taken in the different settlements, and to particular technical requirements for implementation of the works. They thus complement the General Technical Specifications, the Bills of Quantities (BoQ) and the Drawings.

Drinking Water Quality Analysis

Both Karaleti 1 and 2 are supplied with drinking water from groundwater wells. In the TOR, doubts were voiced as to the quality of the drinking water supplied. Following the Initial

Investigation Survey, water samples were taken by the Scientific Laboratory GAMMA, Tbilisi.

The results are included in **Annex 1** and can be summarized as follows:

- All chemical parameters are within the Georgian Water Quality Guidelines.
- Both wells are bacteriologically contaminated.
- But the UV disinfection is effective: No bacteriological contamination has been found in the sample taken after the working disinfection unit. ***This in turn means that disinfection units are not optional. They must be put to use and must always be kept in good working order***.
- UV disinfection does not provide for effective network protection from secondary re-contamination. This could only be achieved with chlorination of the water.

Based on the laboratory analysis, no further measures are deemed necessary, except for ***the immediate putting into service of the UV disinfection units. This would include setting up the organisational and financial framework for the regular and timely replacement of the UV lamps*** (normally once a year).

Design Values

Karaleti I-II settlement is located in Gori District. Due to the reason that existing surface water drainage system does not meet with Construction Standards and Regulation of Georgia following improvement measurements are planned to be implemented within the scope of represented design.

1. Surface water design flow calculation
2. Rehabilitation of Road-side Drainage Ditches
3. Steel Pipes for crossing of the roads
4. Construction of New Collector Channel
5. Recommendations of Channel Crossings
6. Channel Crossings

Surface water design flows is explained under the chapter 3.1, rest issues are stated in the chapter 4.

Surface water design flows

Following hydraulic calculations has been provided in respect of Karaleti I-II-III settlement individual surface drainage channel.

Apart from the estimated flow rate, road side channel min cross section (see. scheme 3.1) is as follows:

Road side channel side min. slope equal to 1:1 or 45º. Extended diameter will cause drainage channel road side run-off for the reason of they are earth drainage pits. Required distance between max. water level and drainage channel surface needs to be not less than 0,1m. Road side channel min slope is accepted i=0,002. Max.

Velocity for above defined road side drainage channels is 132,3l/sec. Respectively, min. cross section alignment starts from the initial point of the road side drainage channel. Changes into road side drainage channel parameters expected in case if estimated flow rate will be more than established max. flow velocity. Road side drainage channel slopes; flow rate and profiles are given on longitudinal sections.

For the detailed design parameters and hydraulic calculations for storm water flows, please refer to annex 2.

Civil Works

Road-side Drainage Ditches

As has been emphasised in the IISR, road-side drainage ditches are the "backbone" of the surface water drainage system. In general, they are not maintained and working according to design. They are usually partly filled up, overgrown, partially blocked or otherwise obstructed.

In the IISR it was proposed that all road-side ditches must be cleaned out and **rehabilitated by the residents**. Residents of cottages are to undertake the work along the full length of their property. Cleaning must be repeated regularly, at least twice a year (before the rainy seasons). MDF has some serious doubts that this concept would work, mainly due to a lack of technical ability and willingness of some inhabitants to carry out this work (if one doesn't clean his section of the ditch, it may have a negative impact on the whole street).

Subsequently, the cleaning of the ditches was included in the package for construction works and in the BoQ, respectively.

The ditches must be restored and maintained to their design dimensions and hydraulic capacity.

Ditch dimensions:	min. depth	0.40 m
	min. bottom width	0.40 m
	min. top width	1.20 m

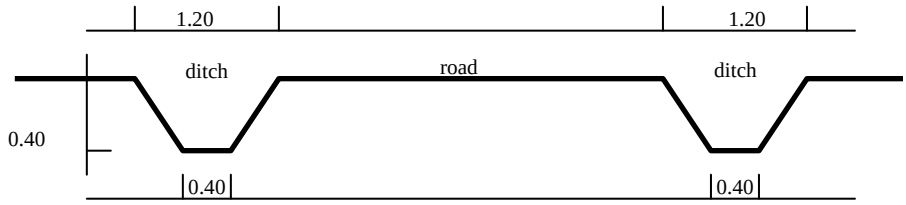

Figure 1: Road with drainage ditches (min. cross section)

Drainage ditches must not be obstructed at access points to individual properties. Access must be provided by bridging the ditch (e.g. with concrete slab, wooden boards, steel sheets) or by placing a pipe (min. diameter 0.30 m).

For a typical drawing of bridging the ditch by a concrete cover slab please refer to

Section III, Drawings. However, since this bridging is considered a private task and the exact number of required accesses is not known, it is not considered in the constructor package and the respective BoQ.

Steel Pipes for crossing of roads

One of the reasons for unsatisfactory surface drainage is the blockage of drainage ditches at cross roads.

Ditches must be connected across the roads with adequately sized pipes. Existing pipes often are broken, deformed and blocked. Often, there are not piped underpasses at all.

Currently, cement or steel pipes have been used. They are set very close to the road surface, and laid into the gravelly material of the road without concrete envelope. As a consequence, most of the pipes are damaged or completely destroyed.

For unobstructed water flow in drainage ditches at crossing roads, heavy duty steel pipes are to be placed. They must be properly laid with the gradient identical to the drainage ditches on a properly prepared concrete base course.

For best structural integrity and protection, the pipes should be laid and packed in concrete of at least 15 cm thickness over the full width of the road. At inflow and outflow points, the airside surfaces of the concrete must be smoothed and rounded.

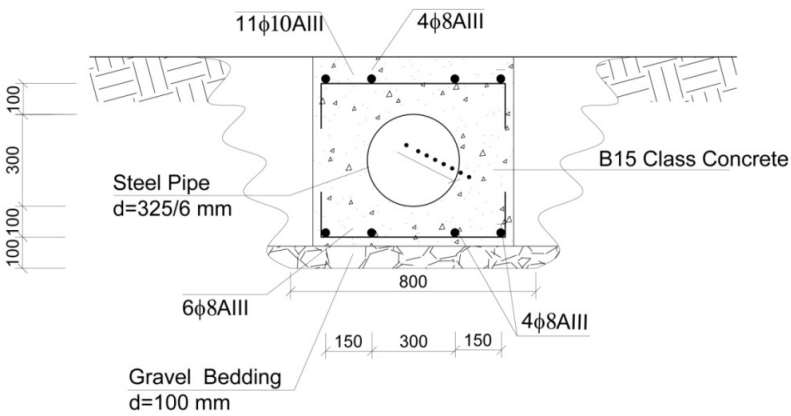

Figure 4.2

Figure 4.2: Steel Pipe (Cross Section)

Backfilling and compacting must be done with care and without heavy vibration equipment. Care must be taken to fix the pipe such that it will not dislodge from the set position due to pouring of concrete or to backfilling and compacting of gravel.

Surplus excavation material shall be spread and planed on the road.

Pipe dimensions: Outside diameter/wall thickness:323.9/5.6 to 406.4/6.3 mm

Material: black steel (St 37)

Pipe surround:	concrete (at least 15 cm thickness on all sides of the pipe)
Standard length	0.7m

Construction of New Collector Channel (from Settlement to the Water Course)

None of the Karaleti settlement has a collector channel to collect water from the road side ditches.

The minimum cross-section for the new collector channels are shown on Figure.4.3

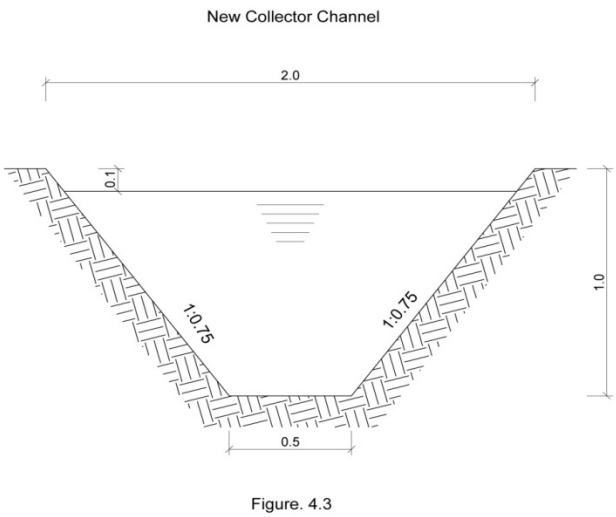

Figure 4.3: Minimum Cross Section of new Channel

Detaileddesign parameters of the collector channels are given on the longitudinal sections

The existing collector channel to the north of the settlements to which the new collector channels are connected to, is silted, partly overgrown and filled with earth.For that reason,in the BOQ future enlargement measurements are included. The implementation is due to funds available.

On the Figure 4.4 is shown Typical Cross Section which needs to be achieved through clearing and desludging of the channel.

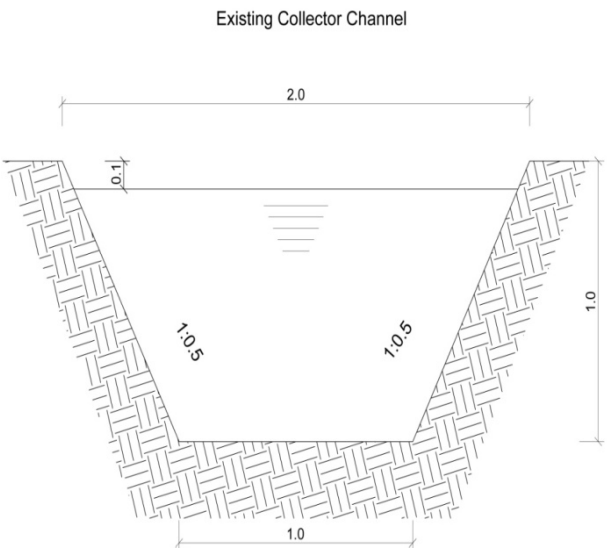

Figure 4.4: Typical Cross Section of Existing Collector Channel

Recommendations of Crossing of Road Side Ditches to Access House Plots

Several options of channel crossings are given below. Unit prices for above discussed measurements are not included into BOQ, but recommendations only. Existence of various options has been dictated by following reasons. Existing channel crossing provided local residents by themselves are done in different way, hence represented options will make them possible to select adequate one.

Option I

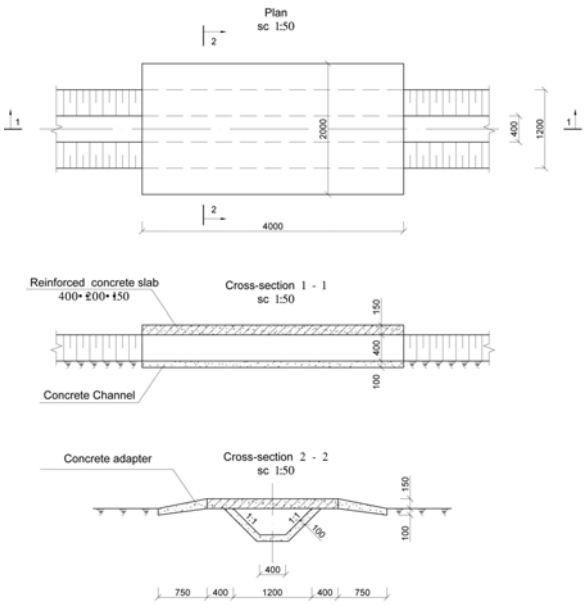

Figure 4.5

The given option-I for crossing of road side ditch is advantageous for the hydraulic regime. Drawing of crossing road sideditch is conditionally made for 400mm height drainage. As for the other heights of the drainage ditch there should be proper alternations of the cross dimensions. The given drawing has recommendation content and it isn't considered in the BOQ, as it would be done by the plot owner with his own expenses

Option II

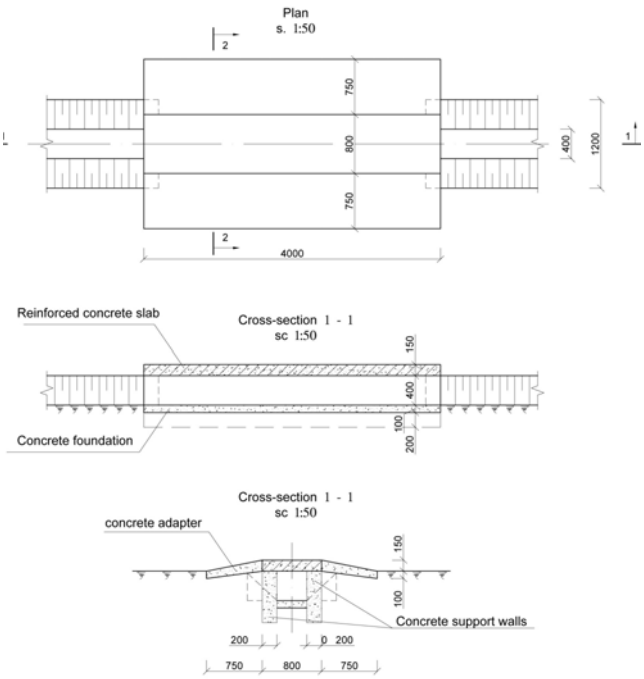

Figure 4.6

Drawing of crossing road side ditch is conditionally made for 400mm height drainage. As for the other heights of the drainage ditch there should be proper alternations of the crossing road side ditch dimensions. The given drawing has recommendation content and it isn't considered in the cost estimates, as it would be done by the plot owner with his own expenses.

Option III

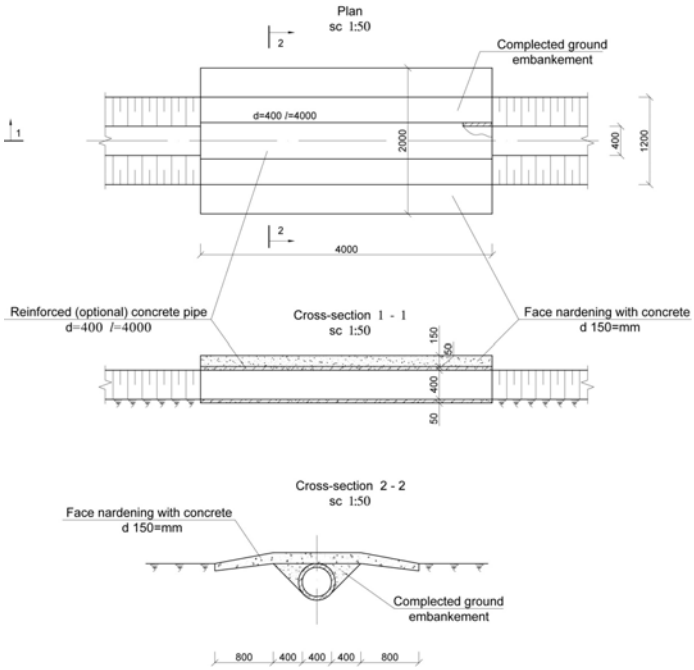

Figure 4.7

Channel Crossings

Existing collector channel is sufficiently enough in width. Residents often have to cross the channel to reach their individual plots. As it was applied by the client, there are three access points construction intended within the project, at the head of the ditch, in the middle and at the end. The access points should be selected by the IDP's representatives.
The access points shall be constructed in the existing channel with two reinforced-concrete pressure 800m pipes according to the drawings 4.8.

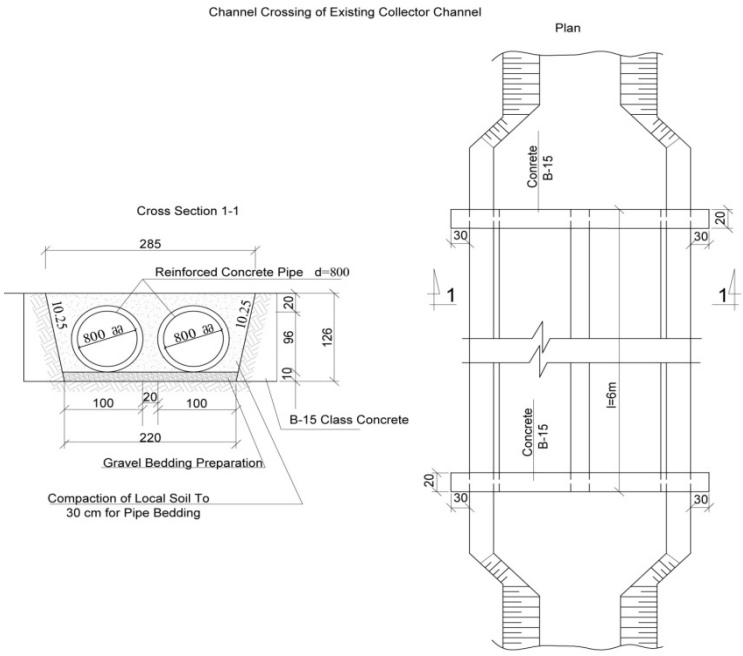

Figure 4.8

Repairs to Sewer Network

The most part of Karaleti (I-II-III) settlement are equipped with PE Pipes (d=110mm) currently, only the certain part of the network needs to be rehabilitated. Especially the section of 120m needs to be replaced. Due to the limited scopes of ongoing project, reconstruction of above defined section isn't possible. Moreover, it might require the whole system replacement. As a consequent the implemented list of work will be as follows:

Arrangement of 13 manhole covers; elevation of inspection chamber by 0.5m - 20pcs of reinforced concrete manholes in total. Herewith, one damaged manhole needs to be replaced also .

Tests on Completion

The contractor has to carry out a topographic survey and hand over as-built drawings showing the measured levels, slopes and cross-sections of the new collector channel.

Only after the handing over of these as-built drawings the work is considered to be completed and final payment will be made.

Annex 1a – Karaleti 1 Chemical Water Analysis

SCIENTIFIC-RESEARCH FIRM "G A M M A"
M. Alexidze st 9, Tbilisi, 380093, Georgia
Tel: (99532) 33-32-68, 29-49-39

CHEMICAL ANALYSIS OF WATER # 3395 lab No 948

Customer: **LTD " Ecoproeqti"**

Kind of Water	Underground
Water ID	**Karaleti 1**
Waterpoint	Befor Filter
Region	
Debit(m³/day)	-
Pasport	
Colour	<15°
Odour	ND
Taste	-
Turbidity (FTU)	0.13
pH	7.20
Temperature °C	-
Dry Resid. (mg/l)	378.765
Conductiv.(S/m)	0.06110

	mg/l	mg-Eq
Hardness		6.980
Fr.Alkalinity		N.D.
Diss O_2	-	
Free CO_2	-	
C.O.D (mg/l O)	-	
General N	-	
Organic C	-	
Summary SiO_2	-	
H_3PO_4	-	
H_3BO_3	-	
H_2S	-	
Residual Cl	-	

Cations			
Ion	mg/l	mg-Eq	mg-Eq%
NH_4	N.D.	N.D.	N.D.
*Ca	107.000	5.3500	69.94
*Mg	19.800	1.6296	21.30
Na	14.630	0.6389	8.35
K	1.210	0.0310	0.41
Sum	142.640	7.6495	100%

Anions			
Ion	mg/l	mg-Eq	mg-Eq%
Cl	17.725	0.5000	6.91
*HCO_3	378.200	6.2000	85.69
CO_3	N.D.	N.D.	N.D.
SO_4	24.000	0.5000	6.91
NO_3	2.200	0.0355	0.49
Sum	422.125	7.2355	100%

<*> - above 20%; <N.D.> - not detected; <-> - not measured, ≤ - Background level

mineralization (mg/l): 564.765

The work Ledearship V.Gvakharia

22.08.2011

SCIENTIFIC-RESEARCH FIRM "G A M M A"
M. Alexidze st.9, Tbilisi, 380093, Georgia
Tel: (99532) 33-32-68, 29-49-39

CHEMICAL ANALYSIS OF WATER # 3396 lab No 949

Customer: **LTD " Ecoproeqti"**

Kind of Water	Underground
Water ID	**Karaleti 1**
Waterpoint	After Filter
Region	
Debit(m³/day)	-
Pasport	
Colour	<15°
Odour	ND
Taste	Pleasant
Turbidity (FTU)	0.36
pH	7.10
Temperature °C	-
Dry Resid. (mg/l)	377.455
Conductiv.(S/m)	0.06149

	mg/l	mg-Eq
Hardness		6.690
Fr.Alkalinity		N.D.
Diss O_2	-	
Free CO_2	-	
C.O.D (mg/l O)	-	
General N	-	
Organic C	-	
Summary SiO_2	-	
H_3PO_4	-	
H_3BO_3	-	
H_2S	-	
Residual Cl	-	

Cations			
Ion	mg/l	mg-Eq	mg-Eq%
NH_4	N.D.	N.D.	N.D.
*Ca	104.000	5.2000	70.68
*Mg	18.100	1.4897	20.25
Na	14.630	0.6389	8.68
K	1.100	0.0282	0.38
Sum	137.830	7.3568	100%

Anions			
Ion	mg/l	mg-Eq	mg-Eq%
Cl	17.725	0.5000	6.81
*HCO_3	384.300	6.3000	85.79
CO_3	N.D.	N.D.	N.D.
SO_4	24.400	0.5083	6.92
NO_3	2.200	0.0355	0.48
Sum	428.625	7.3438	100%

<*> - above 20%; <N.D.> - not detected; <-> - not measured, ≤ - Background level

mineralization (mg/l): 566.455

The work Ledearship V.Gvakharia

22.08.2011

Annex 1B – Karaleti 1 Bacteriological Water Analysis

Gamma SCIENTIFIC RESEARCH FIRM

Customer : LTD "ECOPROEQTI"

Sample name: Karaleti 1, After Filter

Data sampled: 16.08.2011

Lab. N: 949 w

Method of Bacteriological Analysis

Determinant and methods for detection	Standard rate	Factual value
Mezophylic aerobes and facultative anaerobes 1g(ml)	37°C ≤ 20 22°C ≤ 100	0 0
Total Coliforms in 300 ml	NA	ND
Escherichia coli in 300 ml	NA	ND
Streptococcus fecalis in 250 ml	NA	-
Pseudomonas aeroginosa in 250 ml	NA	-
Sulphite- reducing Clostridia in 50 ml	NA	-
Pathogen microorganisms, including Salmonella in 100 ml	NA	-

The work Ledearship V.Gvakharia

20.08.2011

9 M. Alexidze st, Tbilisi, Georgia 0193
tel: +(995 32) 330 274, 330 374 tel/fax: +(995 32) 333 268 e-mail: gamma@gamma.ge

Gamma SCIENTIFIC RESEARCH FIRM

Customer : LTD "ECOPROEQTI"

Sample name: Karaleti 1, Before Filter

Data sampled: 16.08.2011

Lab. N: 948 w

Bacteriological Analysis

Determinant and methods for detection	Standard rate	Factual value
Mezophylic aerobes and facultative anaerobes 1g(ml)	37°C ≤ 20 22°C ≤ 100	24 48
Total Coliforms in 300 ml	NA	16
Escherichia coli in 300 ml	NA	8
Streptococcus fecalis in 250 ml	NA	-
Pseudomonas aeroginosa in 250 ml	NA	-
Sulphite- reducing Clostridia in 50 ml	NA	-
Pathogen microorganisms, including Salmonella in 100 ml	NA	-

The work Ledearship V.Gvakharia

20.08.2011

9 M. Alexidze st, Tbilisi, Georgia 0193
tel: +(995 32) 330 274, 330 374 tel/fax: +(995 32) 333 268 e-mail: gamma@gamma.ge

Annex 1C: Karaleti 2 Chemical Water Analysis

SCIENTIFIC-RESEARCH FIRM "G A M M A"
M. Alexidze st.9, Tbilisi, 380093, Georgia
Tel: (99532) 33-32-68, 29-49-39

CHEMICAL ANALYSIS OF WATER # 3393 lab No 946

Customer: **LTD " Ecoproeqti"**

Kind of Water	Underground
Water ID	**Karaleti 2**
Watepoint	Befor Filter
Region	
Debit(m³/day)	-
Pasport	
Colour	<15°
Odour	ND
Taste	-
Turbidity (FTU)	2.55
pH	7.30
Temperature °C	-
Dry Resid. (mg/l)	381.470
Conductiv.(S/m)	0.06591

	mg/l	mg-Eq.
Hardness		6.713
Fr.Alkalinity		N.D.
Diss O_2	-	
Free CO_2	-	
C.O.D (mgl O)	-	
General N	-	
Organic C	-	
Summary SiO_2	-	
H_3PO_4	-	
H_3BO_3	-	
H_2S	-	
Residual Cl	-	

Cations				Anions			
Ion	mg/l	mg-Eq.	mg-Eq%	Ion	mg/l	mg-Eq.	mg-Eq%
NH_4	N.D.	N.D.	N.D.	Cl	21.270	0.6000	8.16
*Ca	102.000	5.1000	67.78	*HCO_3	378.200	6.2000	84.34
*Mg	19.600	1.6132	21.44	CO_3	N.D.	N.D.	N.D.
Na	17.710	0.7734	10.28	SO_4	24.000	0.5000	6.80
K	1.490	0.0382	0.51	NO_3	3.200	0.0516	0.70
Sum	140.800	7.5247	100%	Sum	426.670	7.3516	100%

<*> - above 20%; <N.D.> - not detected; <-> - not measured, ≤ - Background level

mineralization (mg/l): 567.470

The work Ledearship V.Gvakharia

22.08.2011

SCIENTIFIC-RESEARCH FIRM "G A M M A"
M. Alexidze st.9, Tbilisi, 380093, Georgia
Tel: (99532) 33-32-68, 29-49-39

CHEMICAL ANALYSIS OF WATER # 3394 lab 947

Customer: **LTD " Ekoproeqti"**

Kind of Water	Underground
Water ID	**Karaleti 2**
Watepoint	after Filter
Region	
Debit(m³/day)	-
Pasport	
Colour	<15°
Odour	ND
Taste	-
Turbidity (FTU)	0.00
pH	7.30
Temperature °C	-
Dry Resid. (mg/l)	391.120
Conductiv.(S/m)	0.06643

	mg/l	mg-Eq.
Hardness		6.681
Fr.Alkalinity		N.D.
Diss O_2	-	
Free CO_2	-	
C.O.D (mgl O)	-	
General N	-	
Organic C	-	
Summary SiO_2	-	
H_3PO_4	-	
H_3BO_3	-	
H_2S	-	
Residual Cl	-	

Cations				Anions			
Ion	mg/l	mg-Eq.	mg-Eq%	Ion	mg/l	mg-Eq.	mg-Eq%
NH_4	N.D.	N.D.	N.D.	Cl	14.180	0.4000	5.26
*Ca	104.000	5.2000	68.97	*HCO_3	402.600	6.6000	86.71
Mg	18.000	1.4815	19.65	CO_3	N.D.	N.D.	N.D.
Na	18.810	0.8214	10.89	SO_4	26.800	0.5583	7.34
K	1.430	0.0367	0.49	NO_3	3.300	0.0532	0.70
Sum	142.240	7.5395	100%	Sum	446.880	7.6116	100%

<*> - above 20%; <N.D.> - not detected; <-> - not measured, ≤ - Background level

mineralization (mg/l): 589.120

The work Ledearship V.Gvakharia

22.08.2011

Annex 1D – Karaleti 2 Bacteriological Water Analysis

Gamma SCIENTIFIC RESEARCH FIRM

Customer : LTD "ECOPROEQTI"

Sample name: Karaleti 2, Before Filter

Data sampled: 16.08.2011

Lab. N: 946 W

Bacteriological Analysis

Determinant and methods for detection	Standard rate	Factual value
Mezophylic aerobes and facultative anaerobes 1g(ml)	37°C ≤ 20 22°C ≤ 100	72 92
Total Coliforms in 300 ml	NA	420
Escherichia coli in 300 ml	NA	420
Streptococcus fecalis in 250 ml	NA	-
Pseudomonas aeroginosa in 250 ml	NA	-
Sulphite- reducing Clostridia in 50 ml	NA	-
Pathogen microorganisms, including Salmonella in 100 ml	NA	-

The work Ledearship V.Gvakharia

20.08.2011

9 M. Alexidze st, Tbilisi, Georgia 0193
tel: +(995 32) 330 274, 330 374 tel/fax: +(995 32) 333 283 e-mail: gamma@gamma.ge

Gamma SCIENTIFIC RESEARCH FIRM

Customer : LTD "ECOPROEQTI"

Sample name: Karaleti 2, After Filter

Data sampled: 16.08.2011

Lab. N: 947 w

Bacteriological Analysis

Determinant and methods for detection	Standard rate	Factual value
Mezophylic aerobes and facultative anaerobes 1g(ml)	37°C ≤ 20 22°C ≤ 100	70 100
Total Coliforms in 300 ml	NA	390
Escherichia coli in 300 ml	NA	390
Streptococcus fecalis in 250 ml	NA	-
Pseudomonas aeroginosa in 250 ml	NA	-
Sulphite- reducing Clostridia in 50 ml	NA	-
Pathogen microorganisms, including Salmonella in 100 ml	NA	-

The work Ledearship V.Gvakharia

20.08.2011

9 M. Alexidze st, Tbilisi, Georgia 0193
tel: +(995 32) 330 274, 330 374 tel/fax: +(995 32) 333 283 e-mail: gamma@gamma.ge

Appendix 8.10 Part F

BERBUKI Settlement

Explanatory Notes&
Particular Technical Specifications

These Explanatory Notes& Particular Technical Specifications refer to the design and procurement of works and supplies for the implementation of the necessary and required quality improvements in **Berbuki** IDP's settlementin the water supply system.

The **Berbuki** Settlement was established after the August 2008 war as an emergency measure to provide a home for internally displaced persons (IDPs). The settlement has 134 houses with approximately 540 residents.

Since the move-in of the IDPs into the new settlements, a number of deficiencies and needs for improvement have been identified which require immediate attention. A detailed site survey was conducted in August 2011 to identify remedial works in terms of water supply, drainage and housing, which need priority attention.

In **Berbuki** settlement, emergency improvement measures focus on the ***water supply system only***. Principal measures are the replacement of pipework and fittings, the increase of pumping capacity and repair works to the disinfection unit, water reservoir and insulation.

> *Note: The measures relating to cottages rehabilitation and reduction of moisture condensation are dealt with in VOLUME I, covering all settlements*.

Overview and Precedence

These Explanatory Notes& Particular Technical Specifications (EN&PTS) are an integral part of the Contract Documents and complementary to the other technical sections of the tender documentation. For the purposes of interpretation, the priority of the documents shall be the following:

- Bills of Quantities (BoQ)
- These Explanatory Notes &Particular Technical Specifications (EN&PTS)
- Drawings
- General Technical Specifications (GTS)

The EN&PTS provide specific additional design information and general background to the design decisions taken in the different settlements, and to particular technical requirements for

implementation of the works. They thus complement the General Technical Specifications, the Bills of Quantities (BoQ) and the Drawings.

Design Notes

General Situation

Well, water tank and disinfection unit are located at the N-E corner of the settlement bordered to the N and E by an irrigation channel and to the S by a gravel road. Besides the public water supply there are 15 additional, rather shallow irrigation wells in the settlement. At present the existing reservoir cannot be filled due to a leak at the bottom of the tank.

The existing well in Berbuki is an artesian well with a steel casing with an inner diameter of 160 mm. The new pump shall be a three phase submersible pump, which will be installed in the existing well.

There is also an existing artesian well South of the settlement. This well and the adjacent, now defunct water tower served for the water supply of the village of Berbuki, but were abandoned when a new supply source was tapped. Initially, the option of using this well as an alternative source was considered feasible. However, after identifying all required investments, the Consultant concluded that using the original well is more cost-effective.

If in future considerably more water should be required, it is still possible to connect the artesian well to the water supply of Berbuki settlement.

The water quality and quantity of the currently used well is sufficient. But the capacity of the existing pump must be increased to satisfy the settlements requirements.

The water supply system is equipped with an UV-disinfection unit, which is not readily connected. In order to make ready-to-use the control unit has to be connected to a power supply.

The mechanical works include the replacement of pipework, valves and fitting and the installation of mechanical water meters.

Water Supply

For the detailed design parameters and values for water consumption, pump capacity, tank sizes, etc. please refer to table in annex 1.

Disinfection Units

In a separate house close to the water reservoir is a UV-Disinfection Unit installed. The system is not connected to the mains supply. Connection of the existing unit, including taking into operation of the existing system is part of the present tender.

Tests on Completion

The contractor has to conduct and fulfill the following tests on completion of the work:

- First filling of water tank to proof its water tightness, including cleaning and disinfection with a chloride solution
- Pressure test of new pipelines according to the requirements defined in the GTS, including flushing and disinfecting with chloride solution
- Micro-biological water quality analyses before and after the UV-disinfection unit
- After installation of water meter and pressure gauge to discharge pipe from the well, but before the water meter is connected to the pipe from the well to the water tank:
  Measure water quantity measured by flow meter after 1, 2 and 5 minutes, indicate pressure shown on pressure gauge. Calculate average flow rate of the three measurements in l/min.
- After completion of all installation and connection of water meter to pipe from well to water tank:
  Measure water quantity measured in flow meter after 1, 2, 5, 30 and 60 minutes, indicate pressure shown on pressure gauge. Calculate average flow rate of the five measurements in l/min.
- Test of function of dry-run protection and level switches by removing probe from well or disconnecting cable from terminals

Unsuccessful tests have to be repeated after the problem has been identified and fixed to the contractors expenses.
These tests have to be included in the offered unit rates of the corresponding works if no separate position for the tests are foreseen in the BoQ.

Only after the handing over of the successfultest results the work is considered to be completed and final payment will be made.

Training and Maintenance

The contractor shall instruct to the responsible persons from the settlement on the following issues:

- Existing and new UV-disinfection units, including operation manual with contact addresses
- Operation and functionality of water meters, pressure gauges, valves and water tank

The costs for this trainings and manuals have to be included in the unit costs of the corresponding works if no separate position in the BoQ is foreseen.

The contractor also has to state proposed maintenance periods and required works according to the BoQ.

For training regarding pumps please refer to GTS for more details.

Annex 1 –Design parameters water supply

Design of Potable Water Supply Improvement and Surface Water Drainage for the IDP's Settlements in 8 Villages, Georgia

Design Parameters Water Supply - Summary

version: 2.3

	Berbuki	Khurvaleti	Skra	Shavshebi	Shavshebi	Karaleti	Mokhisi	Akhalsopeli	Metheki
Water demand				**existing**	**required**				
Population	536	566	344	606	900	2000	232	450	150
No. of Houses	134	139	86	177	177	480	58	100	35
Daily per capita consumption [l]	265	265	265	265	265	265	265	265	265
Daily average water consumption [m3	**142**	**150**	**91**	**161**	**239**	**530**	**61**	**119**	**40**
Peak factor	1.5	1.5	1.5	1.5	1.5	*no measures*	1.5	1.5	1.5
Max. daily water consumption	**213**	**225**	**137**	**241**	**358**	*required*	**92**	**179**	**60**
Pump / Supply									
Supply time [h]	14	14	14	13 - 16	14	---	14	tbd	14
max. flowrate [m3/h]	10.1	10.7	6.5	10 - 12	17.0	---	4.4	tbd	2.8
max. flowrate [l/s]	2.82	2.98	1.81	2.77 - 3.33	4.73	---	1.22	tbd	0.79
selected pump capacity [l/s]	**2.80**	**3.00**	**1.80**	**existing pump**	**4.80**	**---**	**1.20**	**tbd**	**0.80**
pump head [m]	21.40	36.30	24.35	tbd	tbd	---	27.30	tbd	25.24
selected pump type	submersible borehole pump	submersible borehole pump	submersible borehole pump	existing: submersible borehole pump	existing: submersible borehole pump	*no measures required*	submersible borehole pump		submersible borehole pump
pump discharge pipe, PE100, PN 10	**DN 75, ID 66.0**	**DN 75, ID 66.0**	**DN 75, ID 66.0**	**DN 63, ID 55.4**	**DN 63, ID 55.4**	**---**	**DN 63, ID 55.4**	**tbd**	**DN 63, ID 55.4**
Length pump discharge pipe [m]	12.00	41.00	45.00	existing pipe	existing pipe	---	34.00	tbd	38.00
Water Tanks									
Existing tank size [m3]	50	50	50	50	50	no measures	25	50	25
Tank capacity of avg. consumption	35%	33%	55%	31%	21%	required	41%	42%	63%
Designed tank size [m3]	***50***	***50***	***50***	***100***	***100***	***---***	***25***	***50***	***25***
Designed tank capacity of avg. cons.	35%	33%	55%	62%	42%	---	41%	42%	63%
Remarks:	Tank size shall be between 33% and 50% of average daily consumption to allow supply during daily peak hours								

General remarks:

Length of pump discharge pipes estimated --> to be verified by contractor, but little influence on head loss only

Karaleti --> no measures

Akhasopeli --> new borehole, no data yet

Shavshebi --> at the moment there are only two thirds of the people living in Shavshvebi as the water supply system originally was designed for. subsequently it is not proposed to increase pump capacity at the moment. If with the proposed measures the supply system can not satisfy the demand in future, a 2-stage pump test of the borehole needs to be carried out and assessed, if the well capacity is big enough to install a pump with a bigger pump capacity.

Annex 2 – Design parameters Electrical Installations

Design Parameters Electricty Supply - Summary

	Berbuki	Khurvaleti	Skra	Shavshebi	Karaleti	Mokhisi	Akhasopeli	Metheki
Electrical Devices*								
Established. Capacity [kW]	2.30	3.10	2.30			1.20		0.85
Reqd. Capacity [kW]	2.30	3.10	2.30			1.20		0.85
Estimated Power [A]	4.12	5.60	4.12			2.15		1.52
Voltage [V]	380/220	380/220	380/220			380/220		380/220
Lightning								
Established. Capacity [kW]	0.40	0.40	0.40			0.40		0.40
Reqd. Capacity [kW]	0.40	0.40	0.40			0.40	*to be*	0.40
Estimated Power [A]	1.98	1.98	1.98			1.98	*assessed*	1.98
Voltage [V]	220	220	220	*existing*	*no measures required*	220	*after*	220
TOTAL							*exploration of borehole*	
Established. Capacity [kW]	**2.70**	**3.50**	**2.70**			**1.60**		**1.25**
Reqd. Capacity [kW]	**2.70**	**3.50**	**2.70**			**1.60**		**1.25**
Estimated Power [A]	**6.10**	**7.58**	**6.10**			**4.13**		**3.50**
Supply Cable (Transformer - Site)								
Length [m]	500	100	300			500		500
Cross-section [mm2]	**25**	**10**	**25**			**25**		**25**

* Electrical Devices: Pumps and Disinfection Systems

Annex 3 – Berbuki PUMP Schematic

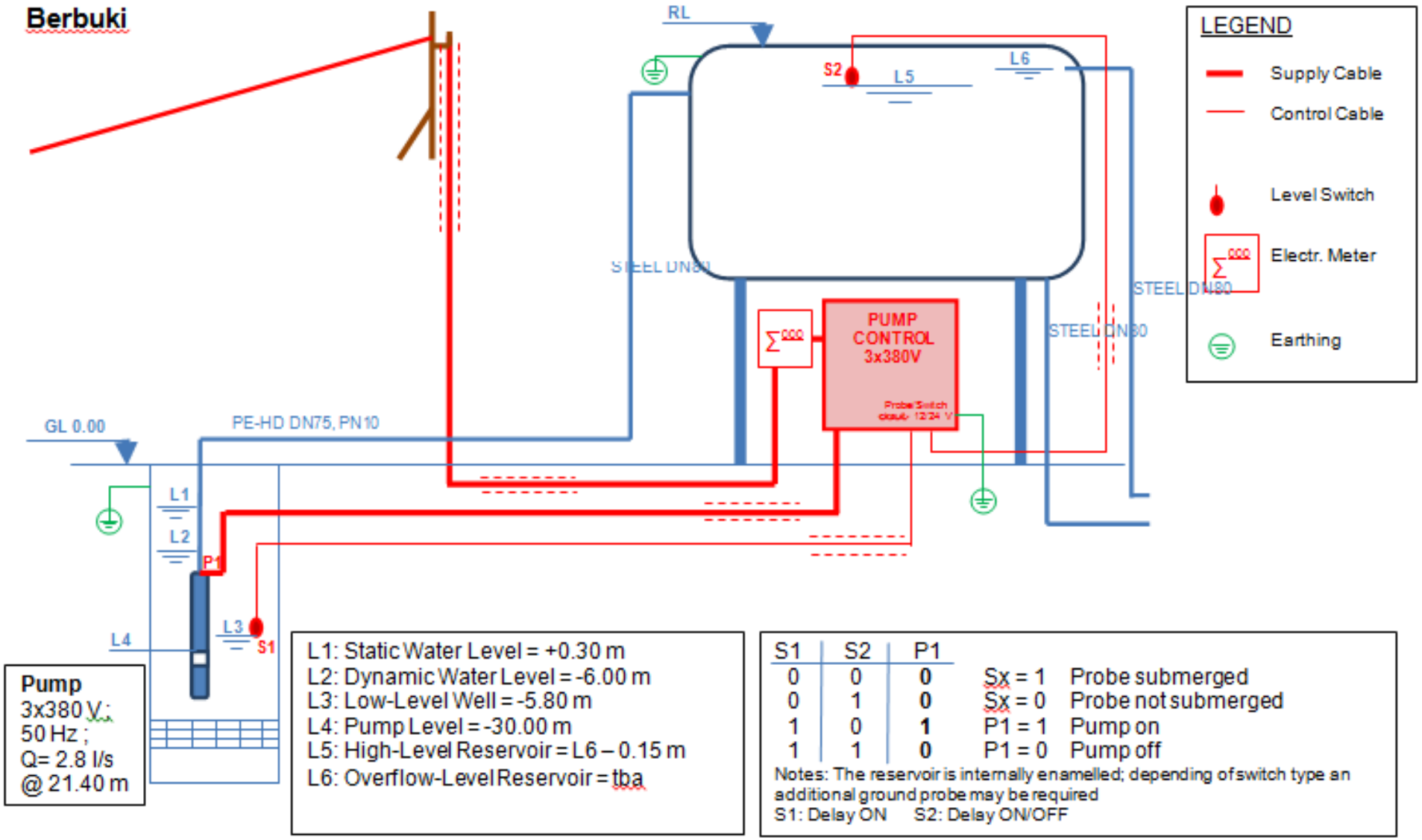

Appendix 8.10 Part G

SHAVSHEVBI Settlement

Explanatory Notes&
Particular Technical Specifications

These Explanatory Notes& Particular Technical Specifications refer to the design and procurement of works and supplies for the implementation of the necessary and required quality improvements in **Shavshvebi** IDP's settlementin the water supply system.

The **Shavshvebi**Settlement was established after the August 2008 war as an emergency measure to provide a home for internally displaced persons (IDPs). The settlement was designed for 177 houses with approximately 900 residents. Currently there are only about 600 residents living in this settlement.

Since the move-in of the IDPs into the new settlements, a number of deficiencies and needs for improvement have been identified which require immediate attention. A detailed site survey was conducted in August 2011 to identify remedial works in terms of water supply and housing, which need priority attention.

In **Shavshvebi**settlement, emergency improvement measures focus on the ***water supply system only***. Principal measures are the new construction of a water tank with UV-disinfection unit, the network separation into two supply zones including a new pipeline and zone valves,replacement of pipework and fittings, and repair works to the existing disinfection unit, water reservoir and insulation.

The respective Water Supply Hydraulic Schemeis shown in **Annex 1.**

Note: The measures relating to cottages rehabilitation and reduction of moisture condensation are dealt with in VOLUME I, covering all settlements.

Overview and Precedence

These Explanatory Notes& Particular Technical Specifications (EN&PTS) are an integral part of the Contract Documents and complementary to the other technical sections of the tender documentation. For the purposes of interpretation, the priority of the documents shall be the following:

- Bills of Quantities (BoQ)
- These Explanatory Notes &Particular Technical Specifications (EN&PTS)
- Drawings
- General Technical Specifications (GTS)

The EN&PTS provide specific additional design information and general background to the design decisions taken in the different settlements, and to particular technical requirements for implementation of the works. They thus complement the General Technical Specifications, the Bills of Quantities (BoQ) and the Drawings.

Drinking Water Quality Analysis

Shavshvebi is supplied with drinking water from the new groundwater well. In the TOR, doubts were voiced as to the quality of the drinking water supplied. Following the Initial Investigation Survey, water samples were taken by the Scientific Laboratory GAMMA, Tbilisi.

The water quality analysis in the new well has shown a good compliance with the Georgian standards. Although the hardness with 12.88 mg-Eq/l (standard: 7-10 mg-Eq/l) and the sulfate (SO4) content with 390 mg/l (standard 250 mg/l) exceed the standard values, it is considered sufficient. These parameters do not imply a health risk (according to WHO-standards 500 mg/l sulfate is unproblematic). For further details of the results please refer to annex 4.

The microbiological analysis shows that the mezophilic aerobes and facultative anaerobes are under the limits but there is a slight contamination by coliformicbacterias. ***Subsequently it is absolutely mandatory that the UV-disinfection units are put in operation, constantly run and must always be kept in good working order.***

Subsequently, the Consultant concluded not to drill a new well in order to increase the water quality.

Design Notes

General Situation

There are two borehole wells in the settlement. The original well (No. 1) at the Eastern edge of the settlement, was installed in 2008. Its water quality has been unsatisfactory, and the well is not used anymore. It has been replaced by Well No.2 which was installed in 2010 by the International Rescue Committee. No official data on this well is available.

The new well is located in the northeast of the settlement, in a distance of approx. 80 to 100 m downhill from the village. The water tank and disinfection unit of the public water supply are located in the Southeastern part adjacent to the settlement. The new well is reported to pump directly to the existing tank.

The water quantity is considered sufficient, since there are considerably less inhabitants living in the settlement as per design.

Water Supply

For the detailed design parameters and values for water consumption, pump capacity, tank sizes, etc. please refer to table in annex 2.

Electrical Installations

For the detailed design parameters and values for electrical installations, etc. please refer to table in annex 3.

Proposed Water supply System

To improve the water supply system of Shavshvebi it is proposed to divide the network in two supply zones to increase service pressure and quantity:

- Construction of new water tank 50 m^3 for upper supply zone
  The new tank serves the upper supply zone, the existing one the lower supply zone.
  Both thanks will be filled simultaneously. There is no pump control system foreseen, since its implementation is complicated and basically the pumps will run permanently. With the extended tank volume the spilling of water will be minimised.
  The two tanks are connected in the upper third of the tank with a pipe to level the tank filling and prevent one tank being full and water spilling whilst the other is half empty only.
- New supply pipe to feed lower supply zone from reservoir, including valve chambers to connect both zones. Valves between the zones are permanently closed and only in emergency cases to be opened to deliver water from the upper zone to the lower one
- Provision of separate UV-disinfection systems for each supply zone
- According to the calculations (see previous chapter) the pump capacity is enough to supply the settlement with sufficient water. The capacity of the existing pump and the well shall be assessed.
- The bath house supply will be connected to the main water supply system. The filling of the small water tank shall be done manually by opening a valve, which usually is closed. Because priority shall be given to the main water supply.
- If the existing pump capacity is not enough or the settlement grows to its original intended size, the water consumption and production need to be assessed again

Civil Works

Water Tank

A new 50 m^3 water tank shall be erected adjacent to the existing one. The same design as for the existing one will be applied (seeVolume II-D, Section III,Drawings for more information).The tank will be built on a steel framework, its pillars cast in concrete foundation blocks.

UV-Disinfection building

The project aims construct a separate new building to place the new disinfection unit for the upper supply sector (see Volume II-D, Section III, Drawings). The construction consists ofplastered brick walls. The roof is made of corrugated iron. Inside the disinfection building the UV-disinfection unit with water meter are installed.

Construction works for pipe laying

Along the road which marks the division of the two supply zones a new pipe needs to be laid to ensure a proper and evenly distributed feed of the lower supply zone. On each road cross-section a pipe-cross in a valve chamber is planned.
Further ore there will be excavation works required in the area of the water tanks for the rearrangement of the piping (e.g. new valve chamber on discharge pipe from well to feed both tanks, reconnect existing UV-disinfection unit with lower supply zone)
Construction work include, but not necessarily be limited to trench excavation, temporary disposal of material to be reused, transportation of material to be replaced on constructors landfill site, delivery and put in of pipe bedding material, trench filling with adequate material and reinstatement works of gravel roads and grass plots.

Mechanical Works

Pipework

Pipework includes the following installations:
Pump / Well:

- Multi-jet impeller water meter with threaded connections and pressure gauge

Water tank and connections:

- New water tank 50 m^3 mounted on steel construction including piping from and to tank in steel, including insulation of tank. The installation of the new water tank also includes cleaning, disinfection with chloride and first filling of the tank.
- Disassemble all pipes to and from existing tank, which are not required any more
- Installation of valve chamber to divide the discharge pipe from the pump to the two water tanks

UV-disinfection house:

- Piping for new UV-disinfection unit, including new turbine water meter
- Piping for the replacement of the existing UV-disinfection unit, including installation of new turbine water meter
- Outdoor piping to remove by-pass of existing UV-filtration unit

Pipe laying :

- Delivery and installation of a new pipeline along street to feed the lower supply zone, PE DN 63 mm.

- Installation of valve chambers at crossings between upper and lower supply zone with gate valves.

Please refer to Annex 5 for more detailed pipe and material specification.
The supply and installation of the pipe works includes all necessary fittings, accessories and auxiliaries required for the correct installation and operation of the above mentioned works.

Insulation

The insulation of the existing tank is in most partly scattered. Especially at the connection of the pipes to the tank it is prone to freeze. In order to protect the insulation a new cover of corrugated iron sheets shall be applied around the tank. Insulation shall be locally supplemented as required. Access and inspection openings must be accessible also after the installation of the corrugated iron sheets.
The new tank needs to be insulated completely accordingly to the above description.

UV-disinfection unit

The supply and installation of the two UV-disinfection systems includes all necessary accessories and auxiliaries required for the correct installation and operation of the lamp(s). Delivery and installation of two new UV-filtration unitsWedecoSpektron 15, maximum flow rate of 14.5 m^3/hat 400 J/m^2 in new building.
The supply voltage in Georgia is 220V. It is drawn to the bidders' attention that the power supply conditions may be unstable. Current fluctuations of up to ±8% may be possible.
The disinfection houses are located above ground beside the well. It must be noted, that the disinfection unit must be suitable for installation under the surrounding environmental conditions. The outside temperature variations throughout the year are listed in the table below.

ოცატიონ	თემპერატურე	I	II	III	IV	V	VI	VII	VIII	IX	X	XI	XII	ეარ
ორი	ვერაგე	-1.2	0.2	4.8	10.3	15.7	19.1	22.2	22.3	18.0	12.3	6.0	0.9	10.9
	ახიმუმ	16	19	28	31	34	38	38	40	37	32	25	18	40
	ინიმუმ	-28	-26	-20	-9	-3	2	6	5	-3	-9	-18	-24	-28

ეტსადგური	ტემპერატურა	I	II	III	IV	V	VI	VII	VIII	IX	X	XI	XII	წელი
გორი	საშუალო	-1.2	0.2	4.8	10.3	15.7	19.1	22.2	22.3	18.0	12.3	6.0	0.9	10.9
	აბს. მაქსიმუმი	16	19	28	31	34	38	38	40	37	32	25	18	40
	აბს. მინიმუმი	-28	-26	-20	-9	-3	2	6	5	-3	-9	-18	-24	-28

Electrical Works

Power Supply

Power supply works include a new connection from the existing disinfection house to the new (second) disinfection house. Supply cable and circuit breaker for the UV-units shall be sized according to the recommendations of the UV-System supplier. A general design is provided in this document including its Annexes. This however will have to be verified by the contractor and if necessary adapted to the UV-System manufacturers requirements.
Electrical installations and devices shall comply with the following requirements:

- Miniature Circuit Breakers (MCBs) shall be installed in a closable housing with a hinged door. The minimum protection class shall be IP 54. Only one MCB casing shall be used in each house.
- All sockets shall be wall-mount, industrial type sockets (Type CEE 7/4, 16A, 250 V, grounded, IP54)
- Internal lights can be roof or wall mount and shall have a minimum protection class IP54. External lights shall have a minimum protection class IP65.
- All internal wiring has to be made using appropriate wall-mount cable ducts.
- All electrical equipment must be "earthed" or "grounded" for the safety of equipment, network as whole and operational personnel. (See Volume II, Section III, DrawingEl-5 for the grounding measurements).
- Electrical installations must be conducted according to the construction norms and regulations in force.

Pump Controls

No pump controls are foreseen.The existing pumps are operated manually. Due to the big volume of the tanks, overflow during the night is reduced to a minimum.

Disinfection Units

In the existing Disinfection House is a UV-disinfection unit installed. The system is currently not operational. The existing system is not suitable for the surrounding environment and will subsequently not work reliably in the current location.
In consequence the existing UV-System shall be dismounted and replaced with a suitable system.

Pumping test on existing Well

Pumping Test on Existing Borehole/Well

Since there is no information and documentation of the existing well and borehole available, a simplified pumping test shall be conducted with anflat tape water level meter (electrical contact gauge).

1. Run pump for a longer period (e.g. at least half a day)
2. Measure dynamic water level
3. Define flow rate (see chapter 6.2)
4. Switch of pump and measure with the electrical contact gauge the groundwater level in steps of 0, 10, 20, 30, 45 seconds and 1, 2, 3, 5, 10, 20, 30, 60, 120 and 180 minutes.
5. Switch on pump and measure in the same intervals as above mentioned (4.) Measure until balanced water level is reached.
6. Switch of pump an measure re-increase of water level
7. If required (doubtful data) start again
8. Assess and analyze curve

The results have to be plotted and analyzed by a site hydro-geologist. The objective is to determine the maximum admissible yield and the effective permeability.A report including the measured results, the assessment and findings regarding capacity of the well has to be delivered to the client MDF in 3 copies in paper and 1 electronically version on a CD.

Assessment of Pump Capacity of Existing Pump in Well

After the installation of the water meter and the water gauge in the existing well, the pump capacity shall be measured by two ways:

1. After installation of water meter and pressure gauge to discharge pipe from the well, but before the water meter is connected to the pipe from the well to the water tank:
   Measure water quantity measured by flow meter after 1, 2 and 5 minutes, indicate pressure shown on pressure gauge. Calculate average flow rate of the three measurements in l/min.
2. After completion of all installation and connection of water meter to pipe from well to water tank:
   Measure water quantity measured in flow meter after 1, 2, 5, 30 and 60 minutes, indicate pressure shown on pressure gauge. Calculate average flow rate of the five measurements in l/min.

The measured values shall be documented and submitted to the client MDF.

Tests on Completion

The contractor has to conduct and fulfill the following tests on completion of the work:

- First filling of water tank to proof its water tightness, including cleaning and disinfection with a chloride solution
- Pressure test of new pipeline according to the requirements defined in the GTS, including flushing and disinfecting with chloride solution
- Micro-biological water quality analyses before and after both, the new and the existing UV-disinfection unit

Unsuccessful tests have to be repeated after the problem has been identified and fixed to the contractors expenses.
These tests have to be included in the offered unit rates of the correspondingworks if no separate position for the tests are foreseen in the BoQ.

The contractor has to hand over as-built drawings showing the pipeline alignment and location of valves, etc. The costs for this as-built drawings has to be included in the unit costs of the corresponding works if no separate position in the BoQ is foreseen.
Only after the handing over of these as-built drawings the work is considered to be completed and final payment will be made.

Spare Parts

The supplier shall provide information on proposed spare parts in the respective section of the BoQ for:

- Existing and new UV-disinfection units

Training and Maintenance

The contractor shall instruct to the responsible persons from the settlement on the following issues:

- Existing and new UV-disinfection units, including operation manual with contact addresses
- Operation and functionality of water meters, pressure gauges, valves and water tank
- Operation and functionality of pumps and controls

The costs for this trainings and manuals have to be included in the unit costs of the corresponding works if no separate position in the BoQ is foreseen.

The contractor also has to state proposed maintenance periods and required works according to the BoQ.

Annex 1 –Shavshvebi Water Supply Hydrauilc Scheme

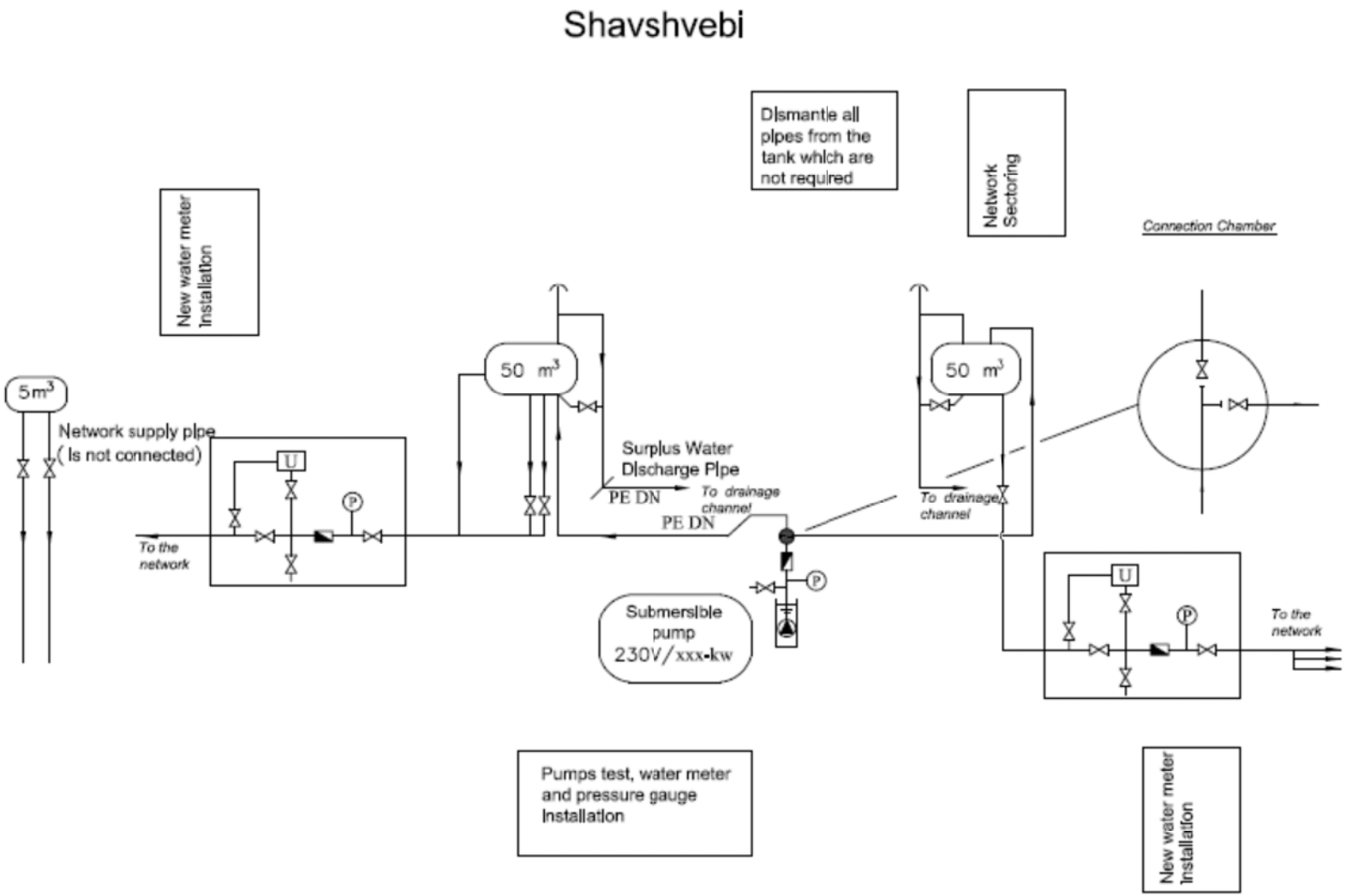

Annex 2 – Design parameters water supply

Design of Potable Water Supply Improvement and Surface Water Drainage for the IDP's Settlements in 8 Villages, Georgia

Design Parameters Water Supply - Summary

version: 2.3

	Berbuki	Khurvaleti	Skra	Shavshebi existing	Shavshebi required	Karaleti	Mokhisi	Akhalsopeli	Metheki
Water demand									
Population	536	566	344	606	900	2000	232	450	150
No. of Houses	134	139	86	177	177	480	58	100	35
Daily per capita consumption [l]	265	265	265	265	265	265	265	265	265
Daily average water consumption [m3	**142**	**150**	**91**	**161**	**239**	**530**	**61**	**119**	**40**
Peak factor	1.5	1.5	1.5	1.5	1.5	*no measures*	1.5	1.5	1.5
Max. daily water consumption	**213**	**225**	**137**	**241**	**358**	*required*	**92**	**179**	**60**
Pump / Supply									
Supply time [h]	14	14	14	13 - 16	14	---	14	tbd	14
max. flowrate [m3/h]	10.1	10.7	6.5	10 - 12	17.0	---	4.4	tbd	2.8
max. flowrate [l/s]	2.82	2.98	1.81	2.77 - 3.33	4.73	---	1.22	tbd	0.79
selected pump capacity [l/s]	**2.80**	**3.00**	**1.80**	**existing pump**	**4.80**	**---**	**1.20**	**tbd**	**0.80**
pump head [m]	21.40	36.30	24.35	tbd	tbd	---	27.30	tbd	25.24
selected pump type	submersible borehole pump	submersible borehole pump	submersible borehole pump	existing: submersible borehole pump	existing: submersible borehole pump	*no measures required*	submersible borehole pump		submersible borehole pump
pump discharge pipe, PE100, PN 10	**DN 75, ID 66.0**	**DN 75, ID 66.0**	**DN 75, ID 66.0**	**DN 63, ID 55.4**	**DN 63, ID 55.4**	**---**	**DN 63, ID 55.4**	**tbd**	**DN 63, ID 55.4**
Length pump discharge pipe [m]	12.00	41.00	45.00	existing pipe	existing pipe	---	34.00	tbd	38.00
Water Tanks									
Existing tank size [m3]	50	50	50	50	50	no measures	25	50	25
Tank capacity of avg. consumption	35%	33%	55%	31%	21%	required	41%	42%	63%
Designed tank size [m3]	***50***	***50***	***50***	***100***	***100***	***---***	***25***	***50***	***25***
Designed tank capacity of avg. cons.	35%	33%	55%	62%	42%	---	41%	42%	63%
Remarks:	Tank size shall be between 33% and 50% of average daily consumption to allow supply during daily peak hours								

General remarks:

Length of pump discharge pipes estimated --> to be verified by contractor, but little influence on head loss only
Karaleti --> no measures
Akhasopeli --> new borehole, no data yet
Shavshebi --> at the moment there are only two thirds of the people living in Shavshvebi as the water supply system originally was designed for. subsequently it is not proposed to increase pump capacity at the moment. If with the proposed measures the supply system can not satisfy the demand in future, a 2-stage pump test of the borehole needs to be carried out and assessed, if the well capacity is big enough to install a pump with a bigger pump capacity.

Annex 3 – Design parameters Electrical Installations

Design Parameters Electricty Supply - Summary

	Metheki	Skra	Khurvaleti	Karaleti	Mokhisi	Akhasopeli	Berbuki	Shavshebi
Electrical Devices*								**supply to disinfection only**
Established. Capacity [kW]	0.85	2.30	3.10	*no measures required*	1.20	*to be assessed after exploration of borehole*	2.30	0.40
Reqd. Capacity [kW]	0.85	2.30	3.10		1.20		2.30	0.40
Estimated Power [A]	1.52	4.12	5.60		2.15		4.12	1.98
Voltage [V]	380/220	380/220	380/220		380/220		380/220	220
Lightning								
Established. Capacity [kW]	0.40	0.40	0.40		0.40		0.40	0.40
Reqd. Capacity [kW]	0.40	0.40	0.40		0.40		0.40	0.40
Estimated Power [A]	1.98	1.98	1.98		1.98		1.98	1.98
Voltage [V]	220	220	220		220		220	220
TOTAL								
Established. Capacity [kW]	**1.25**	**2.70**	**3.50**		**1.60**		**2.70**	**0.80**
Reqd. Capacity [kW]	**1.25**	**2.70**	**3.50**		**1.60**		**2.70**	**0.80**
Estimated Power [A]	**3.50**	**6.10**	**7.58**		**4.13**		**6.10**	**4.00**
Supply Cable (Transformer - Site)								
Length [m]	500	300	100		500		500	-
Cross-section [mm2]	**25**	**25**	**10**		**25**		**25**	**-**

* Electrical Devices: Pumps and Disinfection Systems

Annex 4 – Results Water Quality Analyses

SCIENTIFIC-RESEARCH FIRM "G A M M A"
M. Alexidze st.9, Tbilisi, 380093, Georgia
Tel: (99532) 33-32-68, 29-49-39

CHEMICAL ANALYSIS OF WATER # 3397 lab No 950

Customer: **LTD "Ecoproeqti"**

Kind of Water	Underground		mg/l	mg-Eq
Water ID	**Shavshvebi**	Hardness		12.884
Waterpoint	After filtrer	Fr.Alkalinity		N.D.
Region		Diss O_2	-	
Debit(m^3/day)	-	Free CO_2	-	
Pasport		C.O.D (mg/l O)	-	
Colour	<15°	General N	-	
Odour	ND	Organic C	-	
Taste	-	Summary SiO_2	-	
Turbidity (FTU)	0.17	H_3PO_4	-	
pH	7.20	H_3BO_3	-	
Temperature °C	-	H_2S	-	
Dry Resid. (mg/l)	1057.370	Residual Cl	-	
Conductiv.(S/m)	0.15340			

Cations				Anions			
Ion	mg/l	mg-Eq	mg-Eq%	Ion	mg/l	mg-Eq	mg-Eq%
NH_4	N.D.	N.D.	N.D.	*Cl	134.710	3.8000	20.68
*Ca	126.000	6.3000	34.41	*HCO_3	390.400	6.4000	34.82
*Mg	80.000	6.5844	35.96	CO_3	N.D.	N.D.	N.D.
*Na	123.200	5.3799	29.38	*SO_4	390.000	8.1250	44.21
K	1.760	0.0451	0.25	NO_3	3.300	0.0532	0.29
Sum	330.960	18.3094	100%	Sum	918.410	18.3782	100%

<*> - above 20%; <N.D.> - not detected; <-> - not measured, < - Background level

mineralization (mg/l): 1249.370

The work Ledearship V.Gvakharia

22.08.2011

Gamma SCIENTIFIC RESEARCH FIRM

სამეცნიერო-კვლევითი ფირმა "გამმა"

Customer : LTD "ECOPROEQTI"

Sample name: Shavshvebi, Well

Data sampled: 16.08.2011

Lab. N: 950 w

Method of Bacteriological Analysis

Determinant and methods for detection	Standard rate	Factual value
Mezophylic aerobes and facultative anaerobes 1g(ml)	37°C ≤ 20 22°C ≤ 100	10 30
Total Coliforms in 300 ml	NA	7
Escherichia coli in 300 ml	NA	ND
Streptococcus fecalis in 250 ml	NA	-
Pseudomonas aeroginosa in 250 ml	NA	-
Sulphite- reducing Clostridia in 50 ml	NA	-
Pathogen microorganisms, including Salmonella in 100 ml	NA	-

The work Ledearship V.Gvakharia

20.08.2011

9 M. Alexidze st, Tbilisi, Georgia 0193 0193 თბილისი, მ. ალექსიძის ქ. №9
tel: +(995 32) 330 274, 330 374 tel/fax: +(995 32) 333 268 e-mail: gamma@gamma.ge

Appendix 8.10 Part H

KHURVALETI Settlement

Explanatory Notes&
Particular Technical Specifications

These Explanatory Notes& Particular Technical Specifications refer to the design and procurement of works and supplies for the implementation of the necessary and required quality improvements in **Khurvaleti** IDP's settlementin the water supply system.

The **Khurvaelti** Settlement was established after the August 2008 war as an emergency measure to provide a home for internally displaced persons (IDPs). The settlement has 139 houses with approximately 566 residents.

Since the move-in of the IDPs into the new settlements, a number of deficiencies and needs for improvement have been identified which require immediate attention. A detailed site survey was conducted in August 2011 to identify remedial works in terms of water supply, drainage and housing, which need priority attention.

In **Khurvaleti** settlement, emergency improvement measures focus on the ***water supplyand drainage system***. Principal measures are the replacement of pipework and fittings, the increase of pumping capacity and repair works to the disinfection unit, water reservoir, insulation, restoration of drainage ditches and replacement of drainage crossing-sections.

Note: The measures relating to cottages rehabilitation and reduction of moisture condensation are dealt with in VOLUME I, covering all settlements.

Overview and Precedence

These Explanatory Notes& Particular Technical Specifications (EN&PTS) are an integral part of the Contract Documents and complementary to the other technical sections of the tender documentation. For the purposes of interpretation, the priority of the documents shall be the following:

- Bills of Quantities (BoQ)
- These Explanatory Notes &Particular Technical Specifications (EN&PTS)
- Drawings
- General Technical Specifications (GTS)

The EN&PTS provide specific additional design information and general background to the design decisions taken in the different settlements, and to particular technical requirements for

implementation of the works. They thus complement the General Technical Specifications, the Bills of Quantities (BoQ) and the Drawings.

Design Notes

General Situation

The well, water tank and disinfection unit of the public water supply are located in the N-E part of the settlement, in a green belt between the gardens of two house rows. Besides the settlements drinking water supply, there are separate irrigation wells, each shared of them by 10 houses.

The existing well in Khurvaleti is 150 m deep with a steel casing with an inner diameter of 160 mm. The new pump shall be a submersible pump, which will be installed in the existing well.

Water quality and quantity of the well are sufficient. The capacity of the existing pumps has to be increased to satisfy the settlements requirements. The water supply system is equipped with an UV-disinfection unit, which is readily connected, but it was not switched on.
The mechanical works include the replacement of pipework, valves and fitting and the installation of mechanical water meters
One of the reasons for unsatisfactory surface drainage is the blockage of drainage ditches at cross roads.
Ditches must be connected across the roads with adequately sized pipes. Existing pipes often are broken, deformed and blocked. Often, there are not piped underpasses at all.
Currently, cement or steel pipes have been used. They are set very close to the road surface, and laid into the gravelly material of the road without concrete envelope. As a consequence, most of the pipes are damaged or completely destroyed.

Water Supply

For the detailed design parameters and values for water consumption, pump capacity, tank sizes, etc. please refer to table in annex 1.

Electrical Installations

For the detailed design parameters and values for electrical installations, etc. please refer to table in annex 2.

Surface water design flows

For the detailed design parameters and hydraulic calculations for storm water flows, please refer to annex 5.

Civil Works

Apart from the construction of a control house, civil works mainly focus on the rehabilitation and improvement of the surface water drainage system.

Road-side Drainage Ditches

As has been emphasised in the IISR, road-side drainage ditches are the "backbone" of the surface water drainage system. In general, they are not maintained and working according to design. They are usually partly filled up, overgrown, partially blocked or otherwise obstructed.

In the IISR it was proposed that all road-side ditches must be cleaned out and **rehabilitated by the residents**. Residents of cottages are to undertake the work along the full length of their property. Cleaning must be repeated regularly, at least twice a year (before the rainy seasons). MDF has some serious doubts that this concept would work, mainly due to a lack of technical ability and willingness of some inhabitants to carry out this work (if one doesn't clean his section of the ditch, it may have a negative impact on the whole street).

Subsequently, the cleaning of the ditches was included in the package for construction works and in the BoQ, respectively.

The ditches must be restored and maintained to their design dimensions and hydraulic capacity.

Ditch dimensions:	min. depth	0.40 m
	min. bottom width	0.40 m
	min. top width	0.40 m

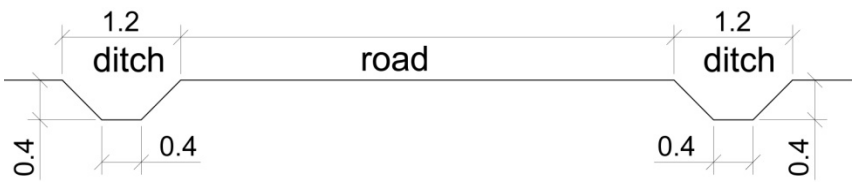

Figure 1: Road with drainage ditches (Cross Section, original design)

Drainage ditches must not be obstructed at access points to individual properties. Access must be provided by bridging the ditch (e.g. with concrete slab, wooden boards, steel sheets) or by placing a pipe (min. diameter 0.30 m).

Steel Pipes for crossing of roads

For unobstructed water flow in drainage ditches at crossing roads, heavy duty steel pipes are to be placed. They must be properly laid with the gradient identical to the drainage ditches on a properly prepared concrete base course.
For best structural integrity and protection, the pipes should be laid and packed in concrete of at least 15 cm thickness over the full width of the road. At inflow and outflow points, the airside surfaces of the concrete must be smoothed and rounded.

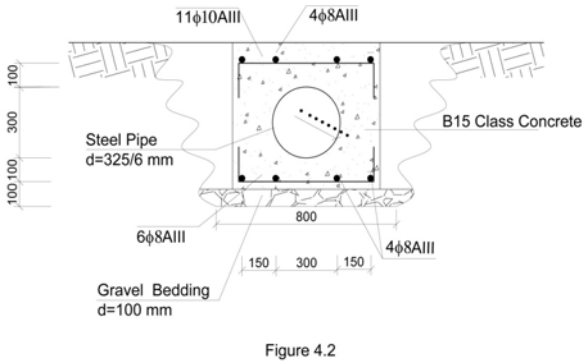

Figure 2: Steel Pipe (Cross Section)

Backfilling and compacting must be done with care and without heavy vibration equipment. Care must be taken to fix the pipe such that it will not dislodge from the set position due to pouring of concrete or to backfilling and compacting of gravel.
Surplus excavation material shall be spread and planed on the road.

Pipe dimensions:	Outside diameter/wall thickness:	323.9/5.6 to 406.4/6.3 mm
	Material:	black steel (St 37)
	Pipe surround:	concrete (at least 15 cm thickness on all sides of the pipe)
	Standard length	7.0 m

Clean out and widen Collector Channel on South Side

Design road-side ditches flow into the existing collector channel that is heavily silted,partly overgrown and filled with ground for the reason of BOQ includes all future enlargement measurements.

On the Figure 3.3 is shown Typical Cross Section which is about the same as the existing channel condition.

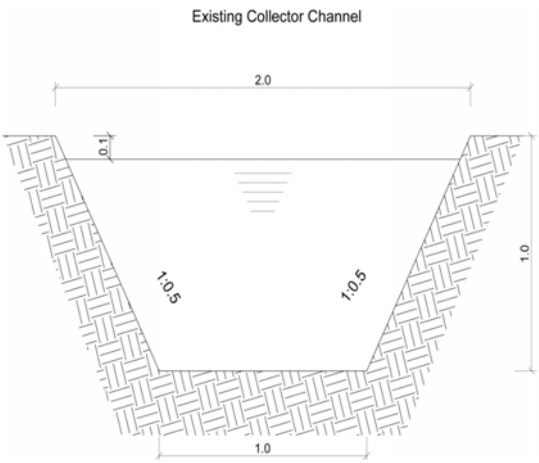

Recommendations of Crossing of Road Side Ditches to Access House Plots

Several options of channel crossings are given below. Unit prices for above discussed measurements are not included into BOQ, but recommendations only. Existence of various options has been dictated by following reasons. Existing channel crossing provided local residents by themselves are done in different way, hence represented options will make them possible to select adequate one.

Option -I

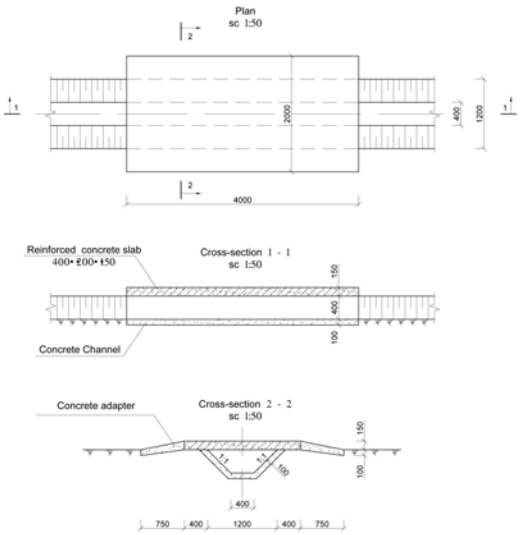

Figure 3.4

The given option-I for crossing of road side ditch is advantageous for the hydraulic regime. Drawing of crossing road side ditch is conditionally made for 400mm height drainage. As for the other heights of the drainage ditch there should be proper alternations of the cross dimensions. The given drawing has recommendation content and it isn't considered in the BOQ, as it would be done by the plot owner with his own expenses.

<u>Option II</u>

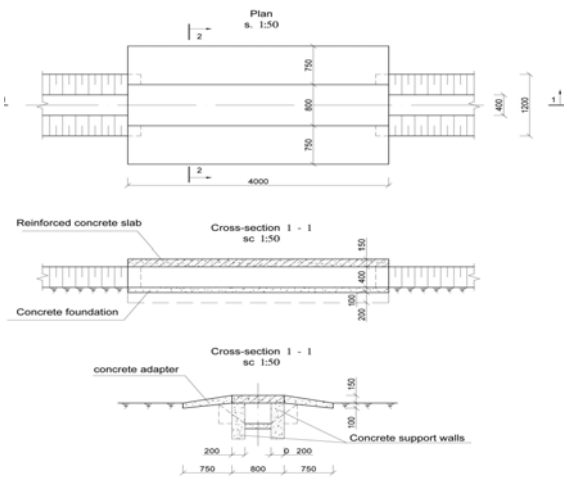

Figure 3.5

Option III

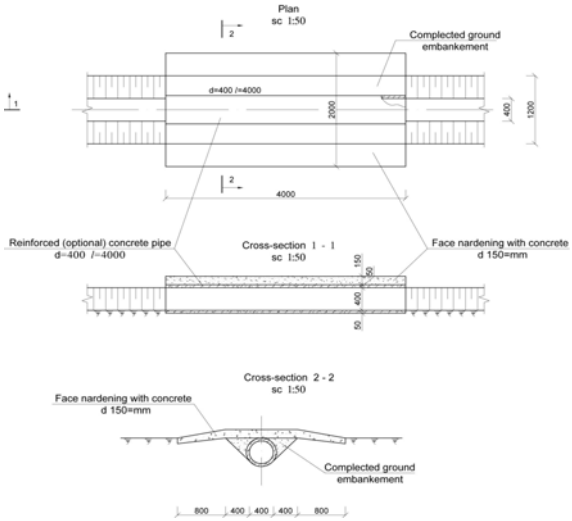

Figure 3.6

Pump Control House

The project aims to provide and install an in-situ well pump control house. The pump control house is made of steel. The pump control panel is installed inside the control house. Please refer to section III, drawings for further information.

Disinfection Units

In a separate house close to the water reservoir is a UV-Disinfection Unit installed. With the replacement of the switchboard, the unit must be re-connected to the power supply.

Tests on Completion

The contractor has to conduct and fulfill the following tests on completion of the work:

- Micro-biological water quality analyses before and after the UV-disinfection unit
- After installation of water meter and pressure gauge to discharge pipe from the well, but before the water meter is connected to the pipe from the well to the water tank:
  Measure water quantity measured by flow meter after 1, 2 and 5 minutes, indicate pressure shown on pressure gauge. Calculate average flow rate of the three measurements in l/min.
- After completion of all installation and connection of water meter to pipe from well to water tank:

Measure water quantity measured in flow meter after 1, 2, 5, 30 and 60 minutes, indicate pressure shown on pressure gauge. Calculate average flow rate of the five measurements in l/min.

- Test of function of dry-run protection and level switches by removing probe from well or disconnecting cable from terminals

Unsuccessful tests have to be repeated after the problem has been identified and fixed to the contractors expenses.
These tests have to be included in the offered unit rates of the corresponding works if no separate position for the tests are foreseen in the BoQ.

Only after the handing over of the successfultest results the work is considered to be completed and final payment will be made.

Spare Parts

Please refer to GTS and BoQ for more detailed information about required spare parts for pumps.

Training and Maintenance

The contractor shall instruct to the responsible persons from the settlement on the following issues:

- Existing and new UV-disinfection units, including operation manual with contact addresses
- Operation and functionality of water meters, pressure gauges, valves and water tank

The costs for this trainings and manuals have to be included in the unit costs of the corresponding works if no separate position in the BoQ is foreseen.

The contractor also has to state proposed maintenance periods and required works according to the BoQ.

For training regarding pumps please refer to GTS for more details.

Annex 1 – Design parameters water supply

Design of Potable Water Supply Improvement and Surface Water Drainage for the IDP's Settlements in 8 Villages, Georgia

Design Parameters Water Supply - Summary

version: 2.3

	Berbuki	Khurvaleti	Skra	Shavshebi	Shavshebi	Karaleti	Mokhisi	Akhalsopeli	Metheki
Water demand				**existing**	**required**				
Population	536	566	344	606	900	2000	232	450	150
No. of Houses	134	139	86	177	177	480	58	100	35
Daily per capita consumption [l]	265	265	265	265	265	265	265	265	265
Daily average water consumption [m3	**142**	**150**	**91**	**161**	**239**	**530**	**61**	**119**	**40**
Peak factor	1.5	1.5	1.5	1.5	1.5	*no measures*	1.5	1.5	1.5
Max. daily water consumption	**213**	**225**	**137**	**241**	**358**	*required*	**92**	**179**	**60**
Pump / Supply									
Supply time [h]	14	14	14	13 - 16	14	---	14	tbd	14
max. flowrate [m3/h]	10.1	10.7	6.5	10 - 12	17.0	---	4.4	tbd	2.8
max. flowrate [l/s]	2.82	2.98	1.81	2.77 - 3.33	4.73	---	1.22	tbd	0.79
selected pump capacity [l/s]	**2.80**	**3.00**	**1.80**	**existing pump**	**4.80**	**---**	**1.20**	**tbd**	**0.80**
pump head [m]	21.40	36.30	24.35	tbd	tbd	---	27.30	tbd	25.24
selected pump type	submersible borehole pump	submersible borehole pump	submersible borehole pump	existing: submersible borehole pump	existing: submersible borehole pump	*no measures required*	submersible borehole pump		submersible borehole pump
pump discharge pipe, PE100, PN 10	**DN 75, ID 66.0**	**DN 75, ID 66.0**	**DN 75, ID 66.0**	**DN 63, ID 55.4**	**DN 63, ID 55.4**	**---**	**DN 63, ID 55.4**	**tbd**	**DN 63, ID 55.4**
Length pump discharge pipe [m]	12.00	41.00	45.00	existing pipe	existing pipe	---	34.00	tbd	38.00
Water Tanks									
Existing tank size [m3]	50	50	50	50	50	no measures	25	50	25
Tank capacity of avg. consumption	35%	33%	55%	31%	21%	required	41%	42%	63%
Designed tank size [m3]	***50***	***50***	***50***	***100***	***100***	***---***	***25***	***50***	***25***
Designed tank capacity of avg. cons.	35%	33%	55%	62%	42%	---	41%	42%	63%
Remarks:	Tank size shall be between 33% and 50% of average daily consumption to allow supply during daily peak hours								

General remarks:

Length of pump discharge pipes estimated --> to be verified by contractor, but little influence on head loss only
Karaleti --> no measures
Akhasopeli --> new borehole, no data yet
Shavshebi --> at the moment there are only two thirds of the people living in Shavshvebi as the water supply system originally was designed for. subsequently it is not proposed to increase pump capacity at the moment. If with the proposed measures the supply system can not satisfy the demand in future, a 2-stage pump test of the borehole needs to be carried out and assessed, if the well capacity is big enough to install a pump with a bigger pump capacity.

Annex 2 – Design parameters Electrical Installations

Design Parameters Electricty Supply - Summary

	Berbuki	Khurvaleti	Skra	Shavshebi	Karaleti	Mokhisi	Akhasopeli	Metheki
Electrical Devices*								
Established. Capacity [kW]	2.30	3.10	2.30	*existing*	*no measures required*	1.20	*to be assessed after exploration of borehole*	0.85
Reqd. Capacity [kW]	2.30	3.10	2.30			1.20		0.85
Estimated Power [A]	4.12	5.60	4.12			2.15		1.52
Voltage [V]	380/220	380/220	380/220			380/220		380/220
Lightning								
Established. Capacity [kW]	0.40	0.40	0.40			0.40		0.40
Reqd. Capacity [kW]	0.40	0.40	0.40			0.40		0.40
Estimated Power [A]	1.98	1.98	1.98			1.98		1.98
Voltage [V]	220	220	220			220		220
TOTAL								
Established. Capacity [kW]	**2.70**	**3.50**	**2.70**			**1.60**		**1.25**
Reqd. Capacity [kW]	**2.70**	**3.50**	**2.70**			**1.60**		**1.25**
Estimated Power [A]	**6.10**	**7.58**	**6.10**			**4.13**		**3.50**
Supply Cable (Transformer - Site)								
Length [m]	500	100	300			500		500
Cross-section [mm2]	**25**	**10**	**25**			**25**		**25**

* Electrical Devices: Pumps and Disinfection Systems

Annex 3 -KHURVALETIPUMP Schematic

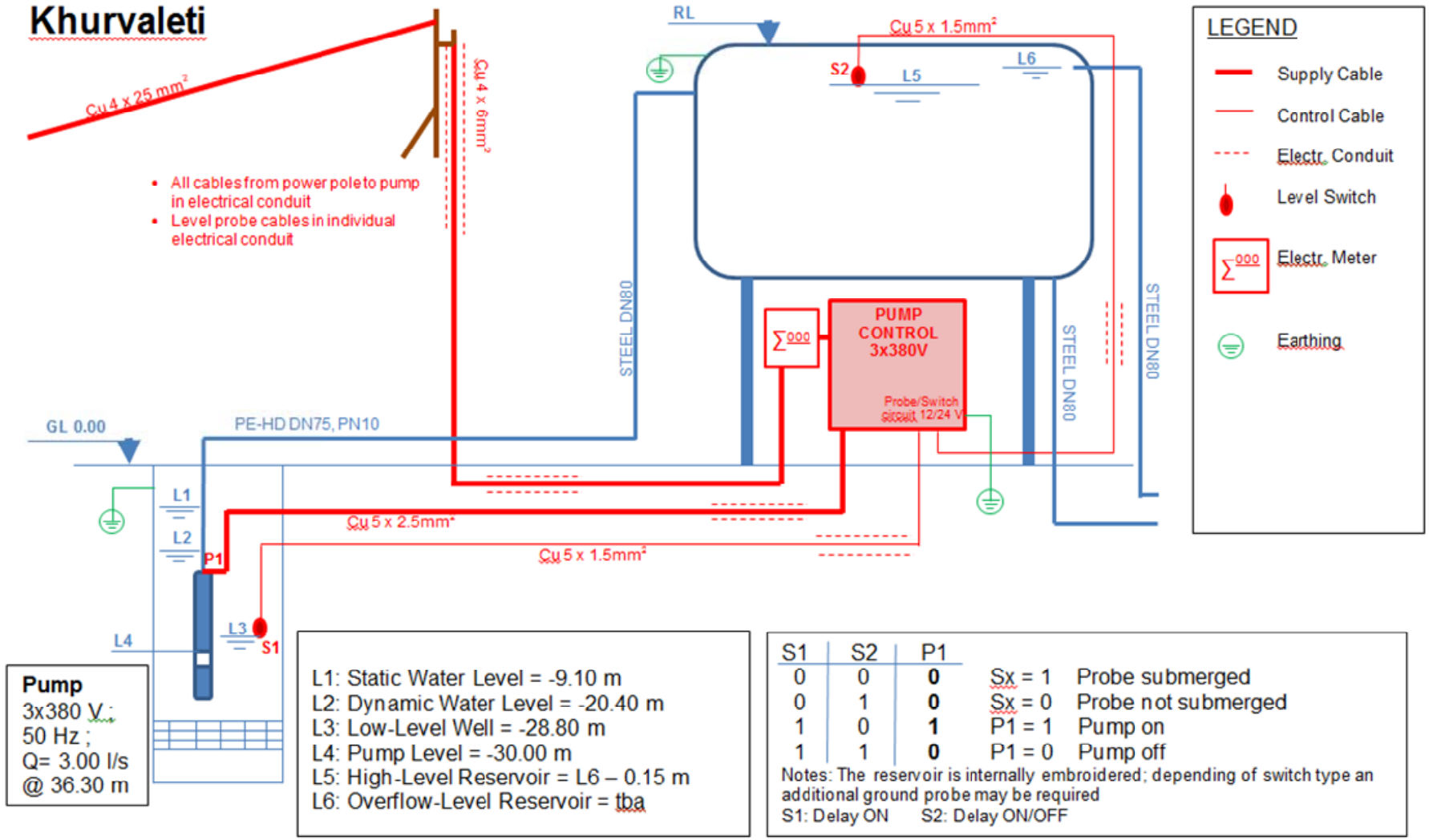

Appendix 8.10 Part I

TELIANI Settlement

Explanatory Notes&
Particular Technical Specifications

These Explanatory Notes & Particular Technical Specifications refer to the design and procurement of works and supplies for the implementation of the necessary and required quality improvements in **Teliani** IDP's settlementin the water supply system.

In **Teliani** settlement, emergency improvement measures focus on the ***surface and ground water water drainage system***. Principal measures are the cleaning and restoration of the road-side drainage ditches (to be done by the residents themselves), the provision of unobstructed flow at cross roads (by new or rehabilitated steel pipes), and unobstructed discharge to drainage outfall channels.

A particular measure deals with the mitigation of ground water intrusion problems. The proposed solution entails the construction of a sub-surface drainage pipe to reliably lower the ground water table in the problem zone.

Note: The measures relating to cottages rehabilitation and reduction of moisture condensation are dealt with in VOLUME I, covering all settlements.

Overview and Precedence

These Explanatory Notes & Particular Technical Specifications are an integral part of the Contract Documents and complementary to the other technical sections of the tender documentation. For the purposes of interpretation, the priority of the documents shall be the following:

- Bills of Quantities (BoQ)
- These Explanatory Notes &Particular Technical Specifications (EN&PTS)
- Drawings
- General Technical Specifications (GTS)

The EN&PTS provide specific additional design information and general background to the design decisions taken in the different settlements, and to particular technical requirements for implementation of the works. They thus complement the General Technical Specifications, the Bills of Quantities (BoQ) and the Drawings.

Design Values

Surface water design flows

Village teliani II is located in Kaspi region. As the existing drainage networks of the settlement doesn't meet the construction standards and regulations of Georgia, the mentioned project regards the following measures:

1. Calculation of the flood water rate of the whole territory of the settlement for each channel;
2. Rehabilitation of the road -side drainage ditches for the unobstructed flow of the surface water according to the calculation;
3. Road crossing with the drainage channel;
4. Construction of the outflow channel from the settlement territory to the water course;
5. Rehabilitation of the Existing……..
6. Construction of the drainage system of north and west sides;
7. Recommendations for crossing channels through the access points to the plots

For the detailed design parameters and hydraulic calculations for storm water flows, please refer to annex 1.

Ground water seepage

The ground surface between the existing central road and the cottages on the west of Teliani settlement is currently swamped. To the residents opinion who live in the road- side cottages the swamping is due to the underground waters and demand the construction of drainage pipeline between the road and the cottages. Accordingly, the project aims the construction of the drainage pipeline system 5 m away from cottages. The whole length of the drainage pipeline is 440m. The pipe buried from the surface is 1,4 m in average. Drainage is constructed with a perforated polyethylene vents pipe d=200mm PN10. Around the pipes sand-grit back filter shall be alligmented in three layers. Each filter length is 20 cm (see draft 3.3). In every 50m length of the drainage pipeline shall be constructed the concrete circular manholes. The ditch above the filter shall be completely filled with filtration qualitative sand-grit.
The great surface slope enables the surface water outflow to the drainage ditches. Afterwards collected ground water shall be outflowed with the drainage ditches.
After some time the blockage of the upper layers of drainage system is to be expected and the drainage can provide the acceptance of only ground waters. In this case, the construction of the outlet pipes under the access roads to the plots shall be necessary for not flooding the water through the plot access roads(should be done by the residents' expenses).

Civil Works

Road-side Drainage Ditches

As has been emphasised in the IISR, road-side drainage ditches are the "backbone" of the surface water drainage system. In general, they are not maintained and working according to design. They are usually partly filled up, overgrown, partially blocked or otherwise obstructed.

It is proposed that all road-side ditches must be cleaned out and **rehabilitated by the residents**. Residents of cottages are to undertake the work along the full length of their property. Cleaning must be repeated regularly, at least twice a year (before the rainy seasons).

The ditches must be restored and maintained to their design dimensions and hydraulic capacity.

Ditch dimensions:	min. depth	0.40 m
	min. bottom width	0.40 m
	min. top width	0.40 m

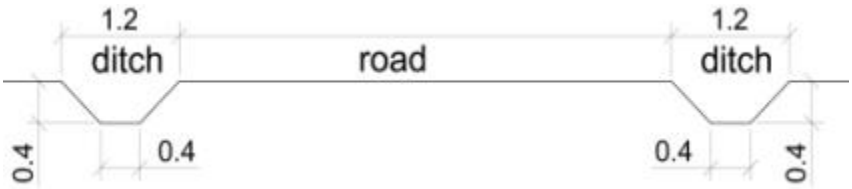

Figure 3.1: Road with drainage ditches (Cross Section, original design)

Drainage ditches must not be obstructed at access points to individual properties. Access must be provided by bridging the ditch (e.g. with concrete slab, wooden boards, steel sheets) or by placing a pipe (min. diameter 0.30 m).

Steel Pipes for crossing of roads

One of the reasons for unsatisfactory surface drainage is the blockage of drainage ditches at cross roads.

Ditches must be connected across the roads with adequately sized pipes. Existing pipes often are broken, deformed and blocked. Often, there are not piped underpasses at all.

Currently, cement or steel pipes have been used. They are set very close to the road surface, and laid into the gravelly material of the road without concrete envelope. As a consequence, most of the pipes are damaged or completely destroyed.

For unobstructed water flow in drainage ditches at crossing roads, heavy duty steel pipes are to be placed. They must be properly laid with the gradient identical to the drainage ditches on a properly prepared concrete base course.

For best structural integrity and protection, the pipes should be laid and packed in concrete of at least 15 cm thickness over the full width of the road. At inflow and outflow points, the airside surfaces of the concrete must be smoothed and rounded.

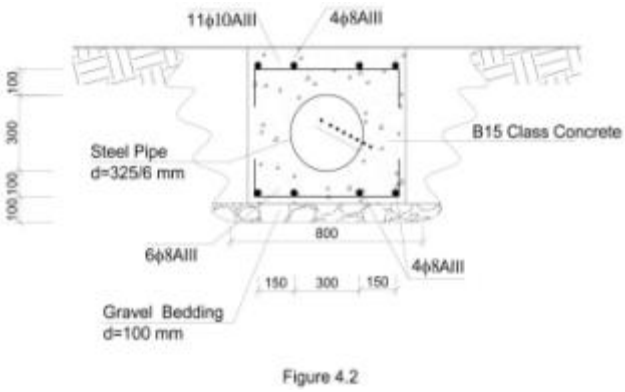

Figure3. 2: Steel Pipe (Cross Section)

Backfilling and compacting must be done with care and without heavy vibration equipment. Care must be taken to fix the pipe such that it will not dislodge from the set position due to pouring of concrete or to backfilling and compacting of gravel.

Surplus excavation material shall be spread and planed on the road.

Pipe dimensions:	Outside diameter/wall thickness:	323.9/5.6 to 406.4/6.3 mm
	Material:	black steel (St 37)
	Pipe surround:	concrete (at least 15 cm thickness on all sides of the pipe)
	Standard length	7.0 m

Sub-surface Drainage Pipe

Situation

Along the N side there runs an asphalted highway with an asphalted side walk. The road embankment is approx. 2 m higher than the plots of the cottages. The curb of the side walk is lowered to street level at access points to cottages.

On the N side of the road, there are irrigated fields on even higher ground.

The main complaint of the residents, particularly of the house row closest to the road, is that there is water seeping from under the embankment into the gardens and to the cottages. During heavy rains, there will also be road run-off water flowing across the

side walk into the gardens at access points where the curb is lowered.

Proposed Measures

The proposed solution is to construct an underground, perforated drainage pipe and infiltration ditch between the highway and the North row of cottages to catch groundwater seepage from the highway side.

In order to allow a combined use of the drainage pipeand infiltration ditch, the trench must be filled with crushed stone or gravel to allow easy infiltration of surface water into the underground pipe (Figure 3).

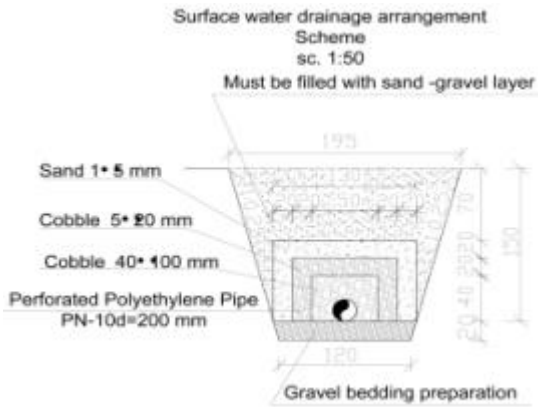

Figure 3.3: Underground drainage pipe (Cross Section)

Particular Specifications

The U-shaped trench of approx.1.04 m depth runs through the vegetable gardens of the cottages. The Contractor must coordinate excavation and construction work with the residents' representatives of the settlementand the purchaser's representative.

Distance to the houses is approx. 5 meters. The trench shall therefore be opened in short lengths and refilled or partly filled with the prescribed granular backfill (filter gravel or crushed stone).

Pipe bedding shall be placed and compacted to the required level and profile across the full width of the trench. Keeping the required gradient of the bedding and pipe must be ensured.

The Contractor must secure the pipe against dislodging when backfilling the trench. The granular material must be only slightly compacted by hand.

Proposed specifications:

min. depth of pipe bottom	1.40 m
min. pipe diameter	200 mm
min. gradient of pipe	1% (i=0.01)

pipe material	PVC or HDPE, perforated
envelope of pipe	geotextile filter fabric
min. bottom width of trench	1.20 m (U-shape)
backfill material	crushed stone or gravel (for max. permeability)

The excavated material must not be used for backfilling the infiltration ditch.

The Contractor is to supply and fill specific granular filter materiel with high permeability for this purpose.

No topsoil shall be placed on the filled-up trench, in order to allow for easy infiltration of surface water into the backfill material.

Before completion, the Contractor must remove from the site and dispose of any surplus excavated material.

Clearing of West side Drainage Channel

The existing drainage ditch of the south of Teliani settlement is contented with sand, overgrown and oppressed, as a consequent its conductivity is derogated. Under the project the drainage system rehabilitation according design parameters is intended, which is approximately the same as the existing condition of the channel.

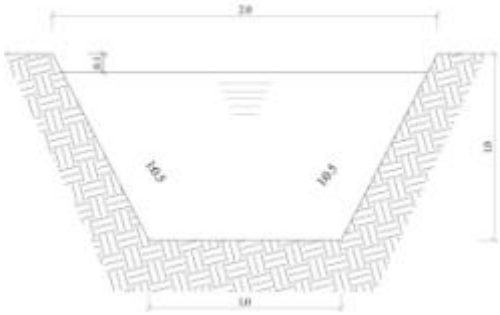

Figure.3.4

Construction of Outfall Channel on East side

For water outflow from the road -side drainage ditches and channels collector channel is to be constructed on the north side, and its typical cross section is given in figure 3.5

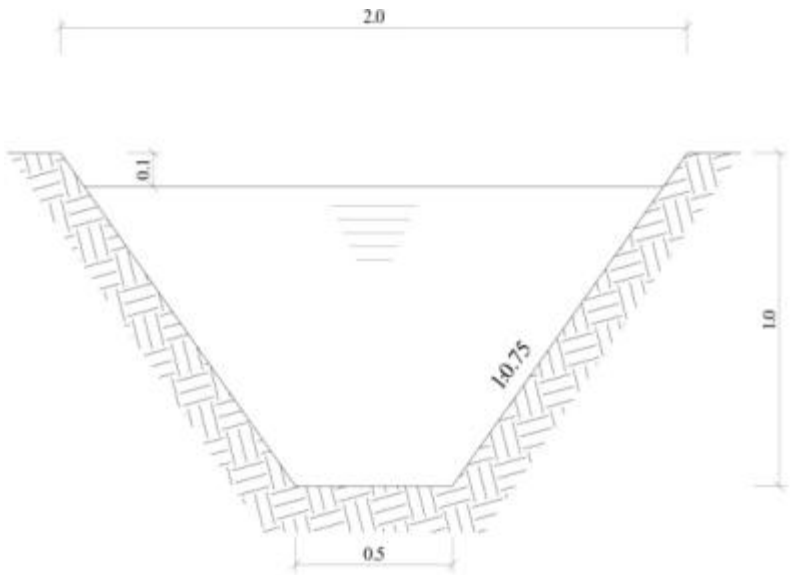

Figure.3.5

Appendix 8.10 Part J

METEKHI Settlement

Explanatory Notes&
Particular Technical Specifications

These Explanatory Notes& Particular Technical Specifications refer to the design and procurement of works and supplies for the implementation of the necessary and required quality improvements in **Metekhi** IDP's settlementin the water supply system.

The **Metekhi**Settlement was established after the August 2008 war as an emergency measure to provide a home for internally displaced persons (IDPs). The settlement has 35 houses with approximately 150 residents.

Since the move-in of the IDPs into the new settlements, a number of deficiencies and needs for improvement have been identified which require immediate attention. A detailed site survey was conducted in August 2011 to identify remedial works in terms of water supply, drainage and housing, which need priority attention.

In **Metekhi** settlement, emergency improvement measures focus on the ***water supply system only***. Principal measures are the replacement of pipework and fittings, the increase of pumping capacity and repair works to the disinfection unit, water reservoir and insulation.

Note: The measures relating to cottages rehabilitation and reduction of moisture condensation are dealt with in VOLUME I, covering all settlements.

Overview and Precedence

These Explanatory Notes& Particular Technical Specifications (EN&PTS) are an integral part of the Contract Documents and complementary to the other technical sections of the tender documentation. For the purposes of interpretation, the priority of the documents shall be the following:

- Bills of Quantities (BoQ)
- These Explanatory Notes &Particular Technical Specifications (EN&PTS)
- Drawings
- General Technical Specifications (GTS)

The EN&PTS provide specific additional design information and general background to the design decisions taken in the different settlements, and to particular technical requirements for implementation of the works. They thus complement the General Technical Specifications, the Bills of Quantities (BoQ) and the Drawings.

Design Notes

General Situation

The well, water tank and disinfection unit of the public water supply are located in the south-east of the settlement. The well lies in a distance of approx. 5 meters to the tank.
The existing well in Metekhi is 80 m deep with a steel casing with an inner diameter of 160 mm. The new pump shall be a three phase submersible pump, which will be installed in the existing well.
The water quality and quantity of the well is sufficient. The capacity of the existing pumps has to be increased to satisfy the settlements requirements. The water supply system is equipped with an UV-disinfection unit, which is connected and ready-to-use.
The mechanical works include the replacement of pipework, valves and fitting and the installation of mechanical water meters.

Water Supply

For the detailed design parameters and values for water consumption, pump capacity, tank sizes, etc. please refer to table in annex 1.

Disinfection Units

In a separate house close to the water reservoir is a UV-Disinfection Unit installed. The disinfection unit is connected and working. However, the supply cable of the UV-Lamp is damaged and shall be replaced under this contract.
The existing disinfection unit is a WedecoProxima 10 with AQUADAUV Controller. Type and Part Number for the replacement cable are specifies in the relevant BoQ section.

Tests on Completion

The contractor has to conduct and fulfill the following tests on completion of the work:

- First filling of water tank to proof its water tightness, including cleaning and disinfection with a chloride solution
- Pressure test of new pipes according to the requirements defined in the GTS, including flushing and disinfecting with chloride solution
- Micro-biological water quality analyses before and after both, the new and the existing UV-disinfection unit
- After installation of water meter and pressure gauge to discharge pipe from the well, but before the water meter is connected to the pipe from the well to the water tank:
  Measure water quantity measured by flow meter after 1, 2 and 5 minutes, indicate pressure shown on pressure gauge. Calculate average flow rate of the three measurements in l/min.

- After completion of all installation and connection of water meter to pipe from well to water tank:
  Measure water quantity measured in flow meter after 1, 2, 5, 30 and 60 minutes, indicate pressure shown on pressure gauge. Calculate average flow rate of the five measurements in l/min.
- Test of function of dry-run protection and level switches by removing probe from well or disconnecting cable from terminals

Unsuccessful tests have to be repeated after the problem has been identified and fixed to the contractors expenses.
These tests have to be included in the offered unit rates of the corresponding works if no separate position for the tests are foreseen in the BoQ.

Only after the handing over of the successfultest results the work is considered to be completed and final payment will be made.

Spare Parts

Please refer to GTS and BoQ for more detailed information about required spare parts for pumps.

Training and Maintenance

The contractor shall instruct to the responsible persons from the settlement on the following issues:

- Existing and new UV-disinfection units, including operation manual with contact addresses
- Operation and functionality of water meters, pressure gauges, valves and water tank

The costs for this trainings and manuals have to be included in the unit costs of the corresponding works if no separate position in the BoQ is foreseen.

The contractor also has to state proposed maintenance periods and required works according to the BoQ.

For training regarding pumps please refer to GTS for more details.

Annex 1 - Design parameters water supply

Design of Potable Water Supply Improvement and Surface Water Drainage for the IDP's Settlements in 8 Villages, Georgia

Design Parameters Water Supply - Summary

version: 2.3

	Berbuki	Khurvaleti	Skra	Shavshebi	Shavshebi	Karaleti	Mokhisi	Akhalsopeli	Metheki
Water demand				**existing**	**required**				
Population	536	566	344	606	900	2000	232	450	150
No. of Houses	134	139	86	177	177	480	58	100	35
Daily per capita consumption [l]	265	265	265	265	265	265	265	265	265
Daily average water consumption [m3	**142**	**150**	**91**	**161**	**239**	**530**	**61**	**119**	**40**
Peak factor	1.5	1.5	1.5	1.5	1.5	*no measures*	1.5	1.5	1.5
Max. daily water consumption	**213**	**225**	**137**	**241**	**358**	*required*	**92**	**179**	**60**
Pump / Supply									
Supply time [h]	14	14	14	13 - 16	14	---	14	tbd	14
max. flowrate [m3/h]	10.1	10.7	6.5	10 - 12	17.0	---	4.4	tbd	2.8
max. flowrate [l/s]	2.82	2.98	1.81	2.77 - 3.33	4.73	---	1.22	tbd	0.79
selected pump capacity [l/s]	**2.80**	**3.00**	**1.80**	**existing pump**	**4.80**	**---**	**1.20**	**tbd**	**0.80**
pump head [m]	21.40	36.30	24.35	tbd	tbd	---	27.30	tbd	25.24
selected pump type	submersible borehole pump	submersible borehole pump	submersible borehole pump	existing: submersible borehole pump	existing: submersible borehole pump	*no measures required*	submersible borehole pump		submersible borehole pump
pump discharge pipe, PE100, PN 10	**DN 75, ID 66.0**	**DN 75, ID 66.0**	**DN 75, ID 66.0**	**DN 63, ID 55.4**	**DN 63, ID 55.4**	**---**	**DN 63, ID 55.4**	**tbd**	**DN 63, ID 55.4**
Length pump discharge pipe [m]	12.00	41.00	45.00	existing pipe	existing pipe	---	34.00	tbd	38.00
Water Tanks									
Existing tank size [m3]	50	50	50	50	50	no measures	25	50	25
Tank capacity of avg. consumption	35%	33%	55%	31%	21%	required	41%	42%	63%
Designed tank size [m3]	***50***	***50***	***50***	***100***	***100***	***---***	***25***	***50***	***25***
Designed tank capacity of avg. cons.	35%	33%	55%	62%	42%	---	41%	42%	63%
Remarks:	Tank size shall be between 33% and 50% of average daily consumption to allow supply during daily peak hours								

General remarks:

Length of pump discharge pipes estimated --> to be verified by contractor, but little influence on head loss only

Karaleti --> no measures

Akhasopeli --> new borehole, no data yet

Shavshebi --> at the moment there are only two thirds of the people living in Shavshvebi as the water supply system originally was designed for. subsequently it is not proposed to increase pump capacity at the moment. If with the proposed measures the supply system can not satisfy the demand in future, a 2-stage pump test of the borehole needs to be carried out and assessed, if the well capacity is big enough to install a pump with a bigger pump capacity.

Annex 2 - Design parameters Electrical Installations

Design Parameters Electricty Supply - Summary

	Berbuki	Khurvaleti	Skra	Shavshebi	Karaleti	Mokhisi	Akhasopeli	Metheki
Electrical Devices*								
Established. Capacity [kW]	2.30	3.10	2.30	*existing*	*no measures required*	1.20	*to be assessed after exploration of borehole*	0.85
Reqd. Capacity [kW]	2.30	3.10	2.30			1.20		0.85
Estimated Power [A]	4.12	5.60	4.12			2.15		1.52
Voltage [V]	380/220	380/220	380/220			380/220		380/220
Lightning								
Established. Capacity [kW]	0.40	0.40	0.40			0.40		0.40
Reqd. Capacity [kW]	0.40	0.40	0.40			0.40		0.40
Estimated Power [A]	1.98	1.98	1.98			1.98		1.98
Voltage [V]	220	220	220			220		220
TOTAL								
Established. Capacity [kW]	**2.70**	**3.50**	**2.70**			**1.60**		**1.25**
Reqd. Capacity [kW]	**2.70**	**3.50**	**2.70**			**1.60**		**1.25**
Estimated Power [A]	**6.10**	**7.58**	**6.10**			**4.13**		**3.50**
Supply Cable (Transformer - Site)								
Length [m]	500	100	300			500		500
Cross-section [mm2]	**25**	**10**	**25**			**25**		**25**

* Electrical Devices: Pumps and Disinfection Systems

Annex 3. METEKHI PUMP Schematic

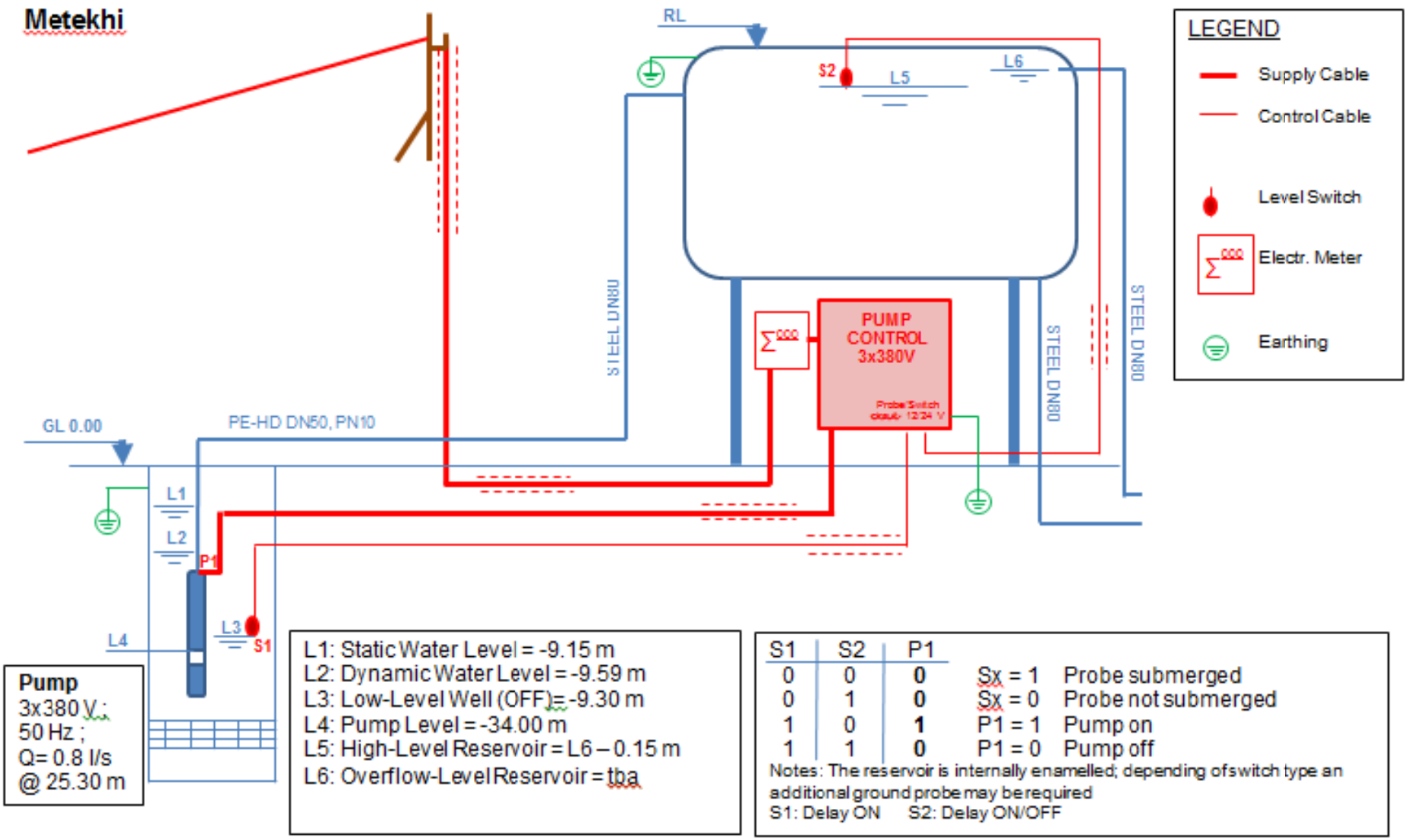

Appendix 8.10 Part K

TSIKANI Settlement

Explanatory Notes&
Particular Technical Specifications

These Explanatory Notes & Particular Technical Specifications refer to the design and procurement of works and supplies for the implementation of the necessary and required quality improvements in Tsilkani IDP's settlementin the water supply system.

According to the ToR in **Tsilkani** settlement, emergency improvement measures focus on the ***surface water drainage system only***. Principal measures are the cleaning and restoration of the road-side drainage ditches, the provision of unobstructed flow at cross roads (by new or rehabilitated steel pipes), and unobstructed discharge to drainage outfall channels.

The topographic survey revealed that due to the high embankment of the main channel, the originally intended discharge to drainage outfall channels is not everywhere possible. Alternative solutions were elaborated and are presented in the following chapters.

However, during the initial investigation survey it was noticed that there is a substantial deficiency in water supply quantity and pressure. The eastern part of the settlement does not have any supply at all. Since the water supply was not part of the original ToR it was agreed with MDF to outline the required measures, but not to do any detailed design. In the tender documents a design and build contract for the water supply will be included.

Note: The measures relating to cottages rehabilitation and reduction of moisture condensation are dealt with in VOLUME I, covering all settlements.

Overview and Precedence

These Explanatory Notes & Particular Technical Specifications are an integral part of the Contract Documents and complementary to the other technical sections of the tender documentation. For the purposes of interpretation, the priority of the documents shall be the following:

- Bills of Quantities (BoQ)
- These Explanatory Notes &Particular Technical Specifications (EN&PTS)
- Drawings
- General Technical Specifications (GTS)

The EN&PTS provide specific additional design information and general background to the design decisions taken in the different settlements, and to particular technical requirements for

implementation of the works. They thus complement the General Technical Specifications, the Bills of Quantities (BoQ) and the Drawings.

Measures to improve Water supply

General Situation

The original water supply source was by a well, which is located in the south centreof the village to the settlement of Tsilkani. The well is not in operation any more, the reason is unknown. (see.DWG 1.1)

DWG 1.1 ნახაზი 1.1

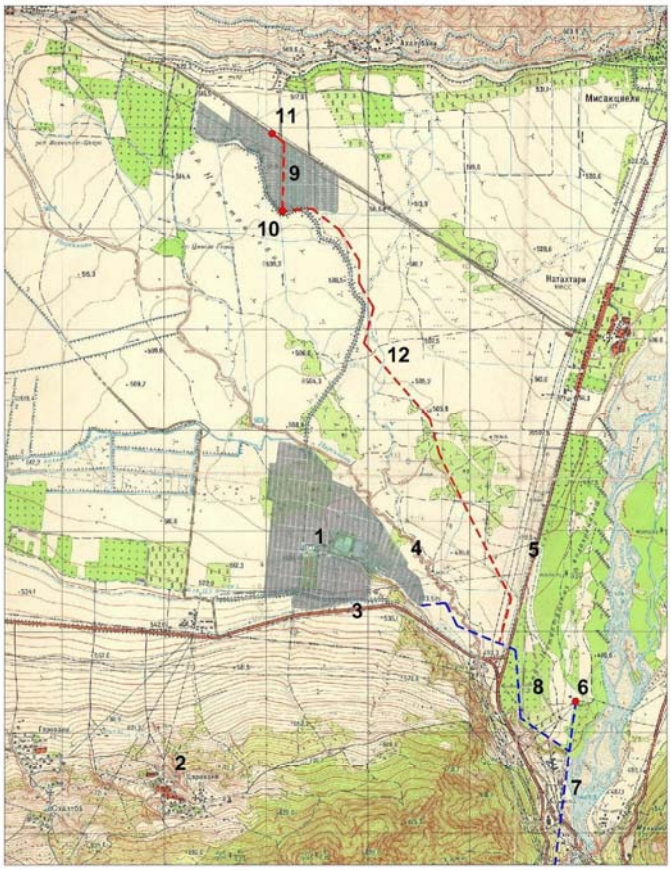

ᲔᲥᲡᲞᲚᲘᲙᲐᲪᲘᲐ	EXPLICATION
1. წეროვნის დასახლება;	1. Tserovani settlement;
2. სოფ. წეროვანი;	2. V. Tserovani;
3. თბილისი-სენაკის ავტომაგისტრალი;	3. Tbilisi-senaki highway;
4. მდ. ნარეკვავი;	4. R. Narekvavi;
5. საქართველოს სამხედრო გზა;	5. Georgian Military highway;
6. ნატახტრის სატუმბო სადგური;	6. Natakhtari Pumoing Station;
7. წნევიანი მაგისტრალი d=1400 მმ;	7. Pressure Transmission main d=1400 mm;
8. წყალდენი d=315 მმ. (წეროვნის);	8. WS pipeline d=315 mm. (V. Tserovani);
9. წილკნის დასახლება;	9. Tsilkani settlement;
10. ჭაბურღილი;	10. Borehole;
11. კოშკი W=2x50 მ^3;	11. Water Tower W=2x50 m^3;
12. წყალდენი d=110 მმ. (წილკნის)	12. WS pipeline d=110 mm. (Tsilkani).

Currently, the water is supplied from the main water pipe which serves the village of Tserovani with water from the Natakhtari well fields. A pipe DN 110 and a length of about 5.5 km branches off from the main and leads to the settlement of Tsilkani. The pressure is insufficient to fill the water tanks and for that reason the supply line DN 110 has been connected directly to the distribution network of the settlement. Due to the low pressure and too little quantity only part of the settlement can be supplied by water.

With the existing water main DN 110 a water quantity of about 3 to 4 l/s can be supplied to the settlement with sufficient supply pressure.

Design Values

Tsilkani Settlement counts about 1700 to 1900 inhabitants. With an average consumption of 265 l/c,d this results in a required daily capacity of approx. 500 m3 or about 6 to 7 l/s (incl. a peak factor of 1.2).

Possible Options

Basically there are several options possible to improve the presently highly unsatisfactory situation.

a) Build new pumping station adjacent to the water main from Natakhtari well fields to Tserovani

b) Build new pumping station in the settlement to pump water into the water tanks

c) Supply the settlement from the old wells, probably an additional well needs to be drilled

d) Take the existing well into operation again and supply part of the village from old well and another part from the existing water main DN 110

Option	Assessment
a)	High investment costs, high pressure head and accordingly high power consumption, automatic control very difficult because of big distance
b)	Danger of interruption / vacuum in main from DN 110. Doubtful if enough water can be supplied to settlement
c)	Take into operation existing well again, water quality is good. Since capacity of existing well is probably not sufficient, a second well needs to be drilled according to the original design
d)	Most cost-effective solution with little new investments required. Supply system more complicated with two different supply zones

The most cost-benefit option is considered to be option d) and, subsequently, proposed to be implemented. With a two-phased pump test of the existing well, its capacity shall be assessed.

If the capacity of the existing well is big enough, even the whole settlement could be supplied from it.

Proposed Measures

The following measures are proposed and need to be carried out in the design & build contract:

- Two-phased pump test in existing well, including assessment of well capacity
- Assessment of required works and design of equipment and installation
- Design, supply and installation of new submersible pump
- Piping in existing network to reassemble pressure main to water tank
- Piping for diversion of two supply networks, incl. piping to connect water main DN 110 directly to relevant supply zone
- Take the UV-disinfection unit into operation again

Please also refer to the hydraulic scheme in annex 1.

For the tender, the tenderer has to elaborate and submit a tentative BoQ for the required mechanical, electrical and civil works. After the assessment and design of the required works and installations, the BoQ for the works shall be updated and verified if it still reflects the current situation or needs to be altered.

Design Values

Surface water design flows

For the detailed design parameters and hydraulic calculations for storm water flows, please refer to annex 2.

Civil Works

Road-side Drainage Ditches

As has been emphasised in the IISR, road-side drainage ditches are the "backbone" of the surface water drainage system. In general, they are not maintained and working according to design. They are usually partly filled up, overgrown, partially blocked or otherwise obstructed.
In the IISR it was proposed that all road-side ditches must be cleaned out and **rehabilitated by the residents**. Residents of cottages are to undertake the work along the full length of their property. Cleaning must be repeated regularly, at least twice a year (before the rainy seasons). MDF has some serious doubts that this concept would work, mainly due to a lack of technical ability and willingness of some inhabitants to carry out this work (if one doesn't clean his section of the ditch, it may have a negative impact on the whole street).
Subsequently, the cleaning of the ditches was included in the package for construction works and in the BoQ, respectively.

The ditches must be restored and maintained to their design dimensions and hydraulic capacity.

Ditch dimensions:	min. depth	0.40 m
	min. bottom width	0.40 m
	min. top width	0.40 m

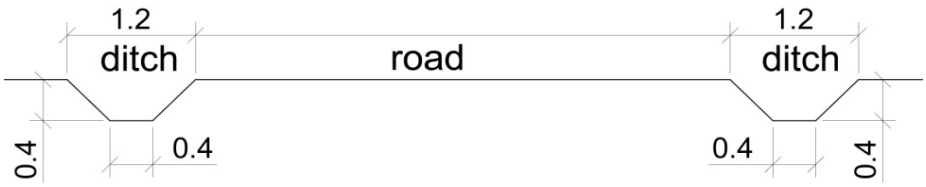

Figure 1: Road with drainage ditches (Cross Section, original design)

Drainage ditches must not be obstructed at access points to individual properties. Access must be provided by bridging the ditch (e.g. with concrete slab, wooden boards, steel sheets) or by placing a pipe (min. diameter 0.30 m).

Steel Pipes for crossing of roads

One of the reasons for unsatisfactory surface drainage is the blockage of drainage ditches at cross roads.
Ditches must be connected across the roads with adequately sized pipes. Existing pipes often are broken, deformed and blocked. Often, there are not piped underpasses at all.
Currently, cement or steel pipes have been used. They are set very close to the road surface, and laid into the gravelly material of the road without concrete envelope. As a consequence, most of the pipes are damaged or completely destroyed.
For unobstructed water flow in drainage ditches at crossing roads, heavy duty steel pipes are to be placed. They must be properly laid with the gradient identical to the drainage ditches on a properly prepared concrete base course.
For best structural integrity and protection, the pipes should be laid and packed in concrete of at least 15cm thickness over the full width of the road. At inflow and outflow points, the airside surfaces of the concrete must be smoothed and rounded.

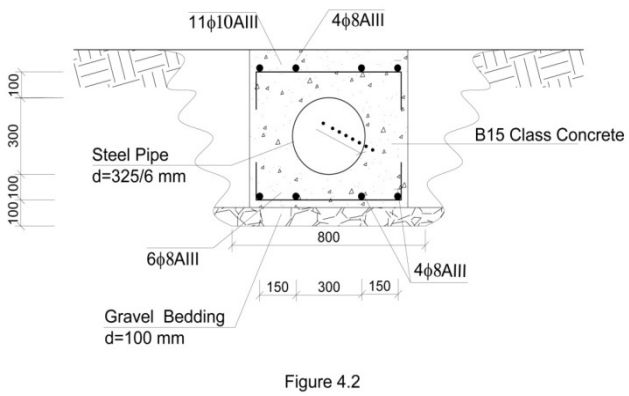

Figure 2: Steel Pipe (Cross Section)

Backfilling and compacting must be done with care and without heavy vibration equipment. Care must be taken to fix the pipe such that it will not dislodge from the set position due to pouring of concrete or to backfilling and compacting of gravel.
Surplus excavation material shall be spread and planed on the road.

Pipe dimensions:	Outside diameter/wall thickness:	323.9/5.6 to 406.4/6.3 mm
	Material:	black steel (St 37)
	Pipe surround:	concrete (at least 15 cm thickness on all sides of the pipe)
	Standard length	7.0 m

Clearing of drainage outfall channels

Outfall drainage ditches are constructed on both sides of the road, their dimensions are relevant to the quantity of outfall surface water and to the elevations of the channel bottom.

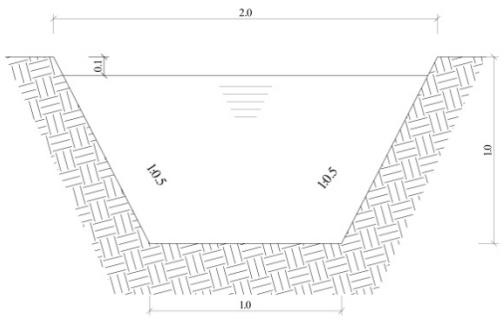

Figure 3:

Clearing of collection channel

There is no need of construction a new outfall or collection channels. It is officiated with an existing outfall channel, which in some sections are obstructed with stony silt and needs to be cleared up. Also there are a lot sections, which are overgrown, and clearing up is necessary.

ANNEX 1 – Water Supply Hydraulic Scheme

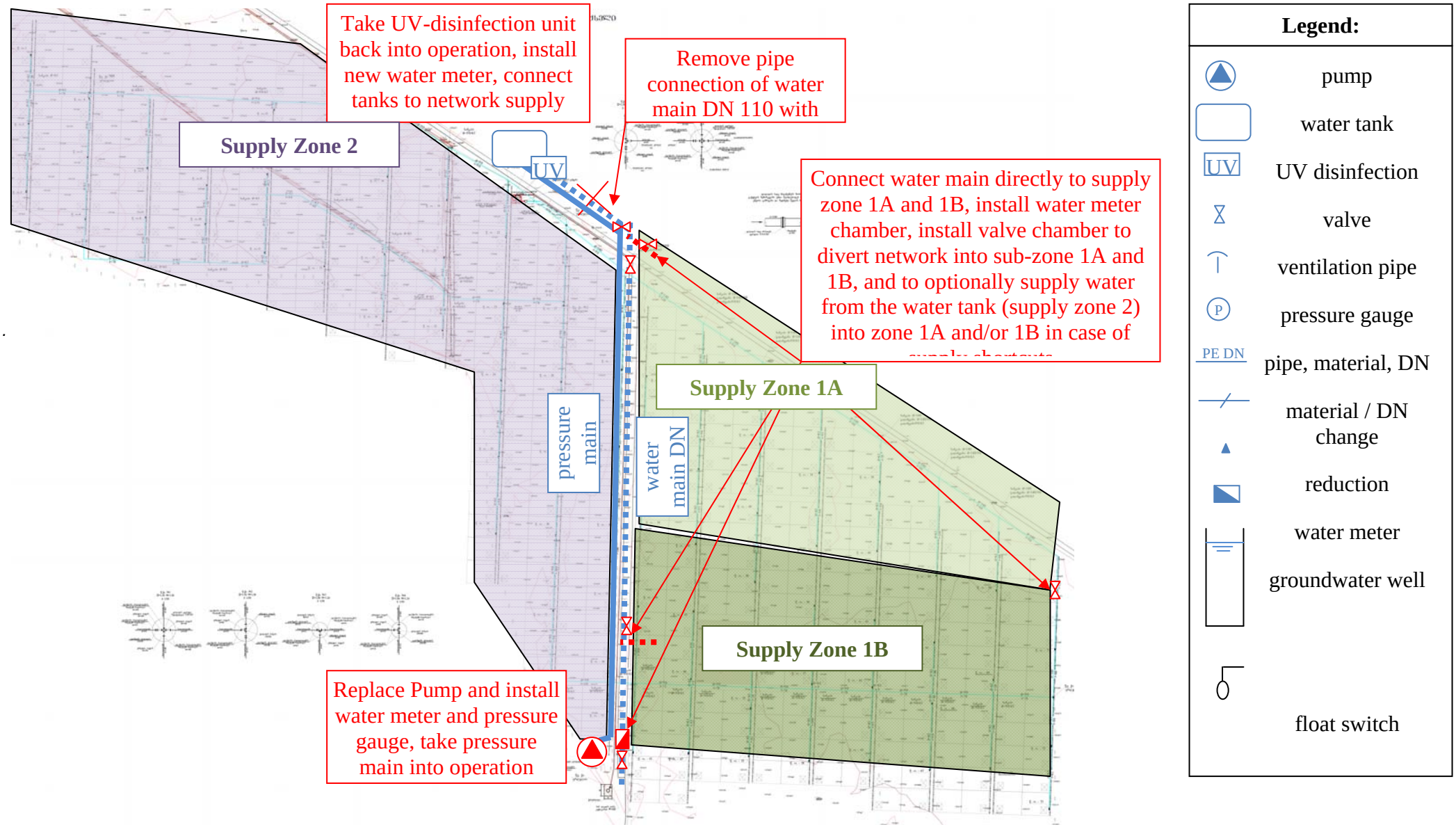

Appendix 8.10 Part L

FREZETI Settlement

Explanatory Notes&
Particular Technical Specifications

These Explanatory Notes & Particular Technical Specifications refer to the design and procurement of works and supplies for the implementation of the necessary and required quality improvements in **Frezeti** IDP's settlement in the surface water drainage system.

In **Frezeti** settlement, emergency improvement measures focus on the ***surface water drainage system only***. Principal measures are the cleaning and restoration of the road-side drainage ditches (to be done by the residents themselves), the provision of unobstructed flow at cross roads (by new or rehabilitated steel pipes), and unobstructed discharge to drainage outfall channels.

Note: The measures relating to cottages rehabilitation and reduction of moisture condensation are dealt with in VOLUME I, covering all settlements.

Overview and Precedence

These Explanatory Notes & Particular Technical Specifications (EN&PTS) are an integral part of the Contract Documents and complementary to the other technical sections of the tender documentation. For the purposes of interpretation, the priority of the documents shall be the following:

- Bills of Quantities (BoQ)
- These Explanatory Notes & Particular Technical Specifications (EN&PTS)
- Drawings
- General Technical Specifications (GTS)

The EN&PTS provide specific additional design information and general background to the design decisions taken in the different settlements, and to particular technical requirements for implementation of the works. They thus complement the General Technical Specifications, the Bills of Quantities (BoQ) and the Drawings

Design Values

Surface water design flows

For the detailed design parameters and hydraulic calculations for storm water flows, please refer to annex 1.

Civil Works

Road-side Drainage Ditches

As has been emphasised in the IISR, road-side drainage ditches are the "backbone" of the surface water drainage system. In general, they are not maintained and working according to design. They are usually partly filled up, overgrown, partially blocked or otherwise obstructed.

It is proposed that all road-side ditches must be cleaned out and **rehabilitated by the residents**. Residents of cottages are to undertake the work along the full length of their property. Cleaning must be repeated regularly, at least twice a year (before the rainy seasons).

The ditches must be restored and maintained to their design dimensions and hydraulic capacity.

Ditch dimensions:	min. depth	0.40 m
	min. bottom width	0.40 m
	min. top width	0.40 m

Figure 1: Road with drainage ditches (Cross Section, original design)

Drainage ditches must not be obstructed at access points to individual properties. Access must be provided by bridging the ditch (e.g. with concrete slab, wooden boards, steel sheets) or by placing a pipe (min. diameter 0.30 m).

Steel Pipes for crossing of roads

One of the reasons for unsatisfactory surface drainage is the blockage of drainage ditches at cross roads.

Ditches must be connected across the roads with adequately sized pipes. Existing pipes

often are broken, deformed and blocked. Often, there are not piped ur[illegible]l.

Currently, cement or steel pipes have been used. They are set very close to the road surface, and laid into the gravelly material of the road without concrete envelope. As a consequence, most of the pipes are damaged or completely destroyed.

For unobstructed water flow in drainage ditches at crossing roads, heavy duty steel pipes are to be placed. They must be properly laid with the gradient identical to the drainage ditches on a properly prepared concrete base course.

For best structural integrity and protection, the pipes should be laid and packed in concrete of at least 15 cm thickness over the full width of the road. At inflow and outflow points, the airside surfaces of the concrete must be smoothed and rounded.

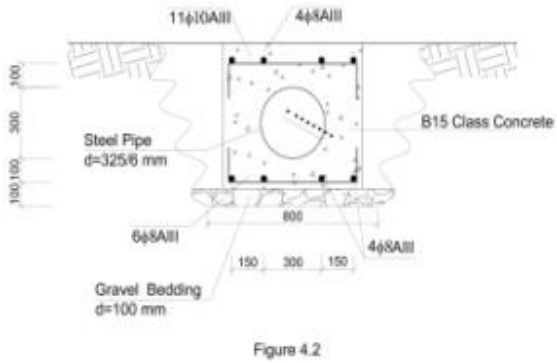

Figure 2: Steel Pipe (Cross Section)

Backfilling and compacting must be done with care and without heavy vibration equipment. Care must be taken to fix the pipe such that it will not dislodge from the set position due to pouring of concrete or to backfilling and compacting of gravel.

Surplus excavation material shall be spread and planed on the road.

Pipe dimensions:	Outside diameter/wall thickness:	323.9/5.6 to 406.4/6.3 mm
	Material:	black steel (St 37)
	Pipe surround:	concrete (at least 15 cm thickness on all sides of the pipe)
	Standard length	7.0 m

Recommendations of Crossing of Road Side Ditches to Access House Plots

Several options of channel crossings are given below. Unit prices for above discussed measurements are not included into BOQ, but recommendations only. Existence of various options has been dictated by following reasons. Existing channel crossing provided local residents by themselves are done in different way, hence represented options will make them possible to select adequate one.

<u>Option -I</u>

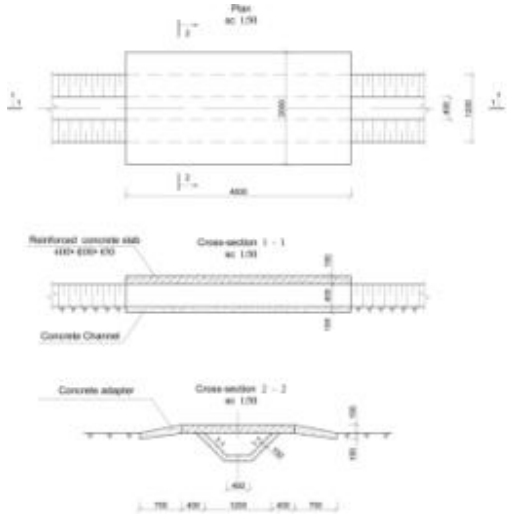

Figure 3

The given option-I for crossing of road side ditch is advantageous for the hydraulic regime. Drawing of crossing road side ditch is conditionally made for 400mm height drainage. As for the other heights of the drainage ditch there should be proper alternations of the cross dimensions. The given drawing has recommendation content and it isn't considered in the BOQ, as it would be done by the plot owner with his own expenses.

Option II

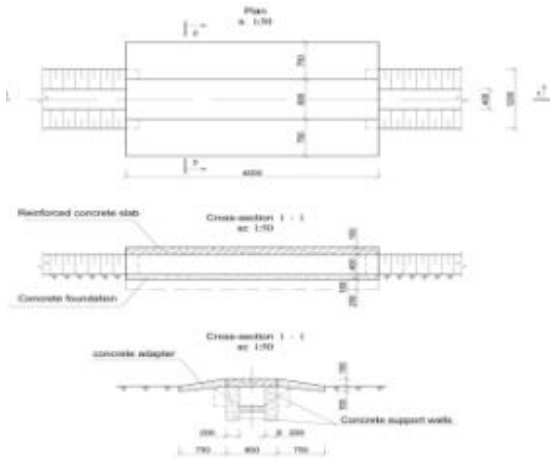

Figure 4

Option III

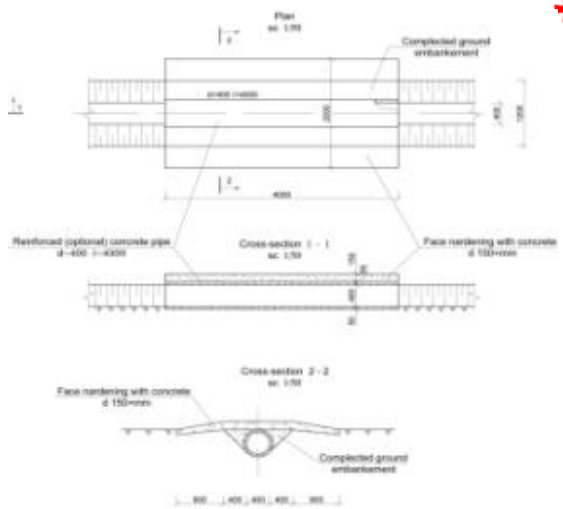

Figure 5

Drainage Diversion Channel on North Side

From the north side slope of Frezeti village flood waters are expected on the village territory. For the protection from flooding of the village, project aims at the construction of the upland drain channel on the upper side of the village. Estimated flow rate calculation of the village, in consequent of the adjacent locality is given in the annex.

Collector Drainage Channels along the Central Road

The north part of the Frezeti village central road has a slope on the south and surface water flow into the outflow channel crossing, located along the central road, the part of the surface water from the south part of the central road flow into the outflow collector channel along the central road, and the rest surface water is independently outlet to the nearest ravines.

The cross section dimensions of the outflow channels according to the calculation rates and elevations are given in the drafts of the longitudinal sections.

Appendix 8.11

Water Quality Test Results (Cottage Settlements)

Appendix 8.11

Water Quality Test Results
(Cottage Settlements)

Table of Contents

PART

A. Information about Collecting Samples

B. Results of Analyses

C. Test Results vs. Standard Requirements

D. Test Results for Karaleti Settlement

E. Test Results for Shavshvebi Settlement

F. Photo Materials

G. Location Maps

Scientific Research Firm "GAMMA"

R E P O R T

Prepared on the basis of agreement of 27/02/2012 between Tetra Tech ENE Georgia and Scientific Research Firm "GAMMA"

Client:

"Tetra Tech ENE — Georgia"

Contractor:

Scientific Research Firm "Gamma" Ltd

President **V. Gvakharia**

Tbilisi March 2012

Part A

Information about Collecting Samples

1)

1. Sample Number: #1
2. Sample collection location: Municipality of Mtskheta, IDP settlement – Tsilkani, yard of Mr. Kako Razmadze, water tap
3. Sample collection location (GPS) (UTM): 38T; X- 0474878, Y– 4642483; H - 474ate (D/M/Y): 28 February, 2012
4. Sample collection (hour) – Start - 16:30; Finish – 16:50
5. Pump/ respective depth –
6. Depth of sample collection –

2)

1. Sample Number: #2
2. Sample collection location: Municipality of Gori, Settlement – Khurvaleti, well (Sample was collected from tap, that is connected to the well with the pipe)
3. Sample collection location (GPS) (UTM): 38T; X - 0441500, Y – 4653876; H – 794
4. Date (D/M/Y): 28 February, 2012
5. Sample collection (hour) – Start - 14:40; Finish – 15:00
6. Pump/ respective depth – N/A
7. Depth of sample collection – 12.50m below ground

3)

1. Sample Number: #3
2. Sample collection location: Municipality of GOri, IDP settlement – Shavshvebi, well (Sample was collected from tap, that is connected to the well with the pipe)
3. Sample collection location (GPS) (UTM): 38T; X- 0436763, Y – 4653393; H - 714.
4. Date (D/M/Y): 28 February, 2012
5. Sample collection (hour) – Start - 15:15; Finish – 15:45
6. Pump/ respective depth – well depth (120m), pump is lowered by 50m below ground
7. Depth of sample collection – 9.50m below ground

4)

1. Sample Number: #4
2. Sample collection location: Municipality of Gori, IDP settlement well – Berbuki, (Sample was collected from tap, that is connected to the well with the pipe)
3. Sample collection location (GPS) (UTM): 38T; X - 0429002, Y – 4653997; H – 696
4. Date (D/M/Y): 28 February, 2012
5. Sample collection (hour) – Start - 13:35; Finish – 13:55
6. Pump/ respective depth – Well depth (70m), depth of the pump - unknown
7. Depth of sample collection – 2.40m below ground

5)

1. Sample Number: #5
2. Sample collection location: Municipality of Gori, IDP settlement – Tsilkani, village well (sample was collected from the pipe coming out of the well)
3. Sample collection location (GPS) (UTM): 38T; X - 0428847, Y – 4653780; H – 700;
4. Date (D/M/Y): 28 February, 2012
5. Sample collection (hour) – Start - 14:00; Finish – 14:20
6. Pump/ respective depth – Water comes out by gravity flow
7. Depth of sample collection - Water comes out by gravity flow

6)

1. Sample Number: #6
2. Sample collection location: Municipality of Gori, IDP settlement – Skra, (Sample was collected from tap, that is connected to the well with the pipe)
3. Sample collection location (GPS) (UTM): 38T; X - 0417236, Y – 4649910; H – 596;
4. Date (D/M/Y): 28 February, 2012
5. Sample collection (hour) – Start - 12:45; Finish – 13:10
6. Pump/ respective depth – Well depth (50m), pump is lowered by 10m below ground
7. Depth of sample collection – 0.50m below ground

7)

1. Sample Number: #7
2. Sample collection location: Municipality of Kareli, IDP settlement – Akhalsopeli, headwork #1 (Okrosopeli), tap connected to headwork;
3. Sample collection location (GPS) (UTM): 38T; X- 0398765, Y – 4650642; H – 706;
4. Date (D/M/Y): 28 February, 2012
5. Sample collection (hour) – Start - 11:00; Finish – 11:25
6. Pump/ respective depth –
7. Depth of sample collection -

8)

1. Sample Number: #8
2. Sample collection location: Municipality of Kareli, IDP settlement – Akhalsopeli, headwork #2 (Djagaraantkari), (Sample was collected from tap, that is connected to the well with the pipe)
3. Sample collection location (GPS) (UTM): 38T; X - 0398902, Y – 4650671; H – 698
4. Date (D/M/Y): 28 February, 2012
5. Sample collection (hour) – Start - 11:25; Finish – 11:35
6. Pump/ respective depth –
7. Depth of sample collection -

9)

1. Sample Number: #9
2. Sample collection location: Municipality of Kareli, IDP settlement – Akhalsopeli; Well (Sample was collected from tap, that is connected to the well with the pipe)
3. Sample collection location (GPS) (UTM): 38T; X - 0398898, Y – 4650659; H – 695
4. Date (D/M/Y): 28 February, 2012
5. Sample collection (hour) – Start - 11:40; Finish – 12:00
6. Pump/ respective depth – Well depth - unknown; Pump lowered by 100m below ground
7. Depth of sample collection – Unable to measure, well is sealed

10)

1. Sample Number: #10
2. Sample collection location: Municipality of Kareli, IDP settlement – Mokhisi, Well (Sample was collected from the well with the help of low power pump)
3. Sample collection location (GPS) (UTM): 38T; X - 0398323, Y – 4654218; H – 675.
4. Date (D/M/Y): 28 February, 2012
5. Sample collection (hour) – Start - 10:00; Finish – 10:40
6. Pump/ respective depth – Pumping equipment is removed and well has not been operating since November, 2011
7. Depth of sample collection – 2.20m below ground

PART B

Results of Analysis

Customer : **"Tetra-Tech ENE – Georgia"**

Sample name: **water sample 1** "Tsilkani " Tap water

Data sampled**: 28.02.2012**

Lab. N: **115 W**

Attachment 1 **Physical and chemical examination Parameters**

Parameters	**Maximum allowable concentrations, according to the standard**	**Results**
Organoleptical indices		
Odour, unit	2	0
Taste, unit	2	0
Colour, unit	15	5
Turbidity, FTU	3.5	1.13
Major parameters		
Sulphates, mg/l	250	14.0
Chlorides, mg/l	250	9.23
Hardness, mg–eq/l (no more than)	7 – 10	3.24
Calcium, mg/l	140	52
Magnesium, mg/l	85	7.8
Sodium, mg/l	200	9.9
Potassium, mg/l	-	1.05
Zinc, mg/l	3	<0.02
Iron, mg/l	0.3	0.08
General indices		
pH	6 – 9	7.9
Permanganate oxidability, mg O	3	0.96
Dry residue, mg/l (no more than)	1000-1500	190.7
Barium, mg/l	0.7	<0.5
Boron, mg/l (total)	0.5	<0.5
Arsenic, mg/l (total)	0.01	<0.005
Mercury, mg/l	0.006	<0.0002
Cadmium, mg/l	0.003	<0.001
Manganese, mg/l	0.4	<0.02

Nickel, mg/l (total)	0.07	<0.02
Nitrates, mg/l	50	2.1
Nitrites, mg/l	0.2	<0.2
Selenium, mg/l (total)	0.01	<0.01
Copper, mg/l (total)	2.0	<0.02
Lead, mg/l (total)	0.01	<0.01
Fluorides, mg/l	0.7	<0.1
Chromium, mg/l (total)	0.05	<0.02
Cyanides, mg/l	0.07	<0.03
Organic matter		
Total Cl- pesticides, mg/l	0.05	<0.001
Radiological indices		
α radioactivity, Bq/l (total)	0.1	<0.1
β radioactivity, Bq/l (total)	1.0	<1.0
Control indices		
Aluminium, mg/l	0.3	<0.1
Polyphosphates, mg/l	3.5	<0.5

Attachment 2: **Microbiological analysis**

Customer : **"Tetra-Tech ENE – Georgia"**

Sample name: **water sample 1** "Tsilkani" Tap water

Data sampled**: 28.02.2012**

Lab. N: **115 W**

Microorganism	**Standard value**	**Results**
Mesophilic aerobes and facultative anaerobes, in 1 ml	37^0C ≤20 22^0C ≤100	4 5
Total coliforms, in 300 ml	Not allowed	Not detected
E coli, in 300 ml	Not allowed	Not detected
Streptococcus faecalis, in 250ml	Not allowed	Not detected
Pseudomonad aeruginoza, in 250ml	Not allowed	Not detected
Sulphite-reducing clostridia (Cl.perfringens), in 50ml	Not allowed	Not detected
Pathogen microorganisms, including Salmonella, in 100ml	Not allowed	Not detected

V. Gvakharia
President
Scinetific Research Firm Gamma
09.03.2012

Customer : **"Tetra-Tech ENE – Georgia"**

Sample name: **water sample 2** "Khurvaleti" DH.

Data sampled**: 28.02.2012**

Lab. N: **116 W**

Attachment 1 **Physical and chemical examination Parameters**

Parameters	**Maximum allowable concentrations, according to the standard**	**Results**
Organoleptical indices		
Odour, unit	2	0
Taste, unit	2	0
Colour, unit	15	0
Turbidity, FTU	3.5	0.49
Major parameters		
Sulphates, mg/l	250	152.0
Chlorides, mg/l	250	96.56
Hardness, mg–eq/l (no more than)	7 – 10	9.66
Calcium, mg/l	140	136
Magnesium, mg/l	85	34.8
Sodium, mg/l	200	86.9
Potassium, mg/l	-	2.31
Zinc, mg/l	3	<0.02
Iron, mg/l	0.3	0.18
General indices		
pH	6 – 9	7.60
Permanganate oxidability, mg O	3	0.88
Dry residue, mg/l (no more than)	1000-1500	731.3
Barium, mg/l	0.7	<0.5
Boron, mg/l (total)	0.5	<0.5

Arsenic, mg/l (total)	0.01	<0.005
Mercury, mg/l	0.006	<0.0002
Cadmium, mg/l	0.003	<0.001
Manganese, mg/l	0.4	<0.02
Nickel, mg/l (total)	0.07	<0.02
Nitrates, mg/l	50	33.5
Nitrites, mg/l	0.2	<0.2
Selenium, mg/l (total)	0.01	<0.01
Copper, mg/l (total)	2.0	<0.02
Lead, mg/l (total)	0.01	<0.01
Fluorides, mg/l	0.7	<0.1
Chromium, mg/l (total)	0.05	<0.02
Cyanides, mg/l	0.07	<0.03
Organic matter		
Total Cl- pesticides, mg/l	0.05	<0.001
Radiological indices		
α radioactivity, Bq/l (total)	0.1	<0.1
β radioactivity, Bq/l (total)	1.0	<1.0
Control indices		
Aluminium, mg/l	0.3	<0.1
Polyphosphates, mg/l	3.5	<0.5

Attachment 2: **Microbiological analysis**

Customer : **"Tetra-Tech ENE – Georgia"**

Sample name: **water sample 2** "Khurvaleti" DH.

Data sampled**: 28.02.2012**

Lab. N: **116 W**

Microorganism	**Standard value**	**Results**
Mesophilic aerobes and facultative anaerobes, in 1 ml	37^0C ≤20 22^0C ≤100	1 35
Total coliforms, in 300 ml	Not allowed	Not detected
E coli, in 300 ml	Not allowed	Not detected

Streptococcus faecalis, in 250ml	Not allowed	Not detected
Pseudomonad aeruginoza, in 250ml	Not allowed	Not detected
Sulphite-reducing clostridia (Cl.perfringens), in 50ml	Not allowed	Not detected
Pathogen microorganisms, including Salmonella, in 100ml	Not allowed	Not detected

V. Gvakharia
President

Scinetific Research Firm Gamma
09.03.2012

Customer : **"Tetra-Tech ENE – Georgia"**

Sample name: **water sample 3** "Shavshvebi" DH.

Data sampled**: 28.02.2012**

Lab. N: **117 W**

Attachment 1 **Physical and chemical examination Parameters**

Parameters	**Maximum allowable concentrations, according to the standard**	**Results**
Organoleptical indices		
Odour, unit	2	0
Taste, unit	2	0
Colour, unit	15	0
Turbidity, FTU	3.5	0.04
Major parameters		
Sulphates, mg/l	250	220.0
Chlorides, mg/l	250	124.2
Hardness, mg–eq/l (no more than)	7 – 10	12.14
Calcium, mg/l	140	142.0
Magnesium, mg/l	85	61.2
Sodium, mg/l	200	114.4

Potassium, mg/l	-	2.04
Zinc, mg/l	3	<0.02
Iron, mg/l	0.3	0.16
General indices		
pH	6 – 9	7.4
Permanganate oxidability, mg O	3	1.12
Dry residue, mg/l (no more than)	1000-1500	1006.1
Barium, mg/l	0.7	<0.5
Boron, mg/l (total)	0.5	<0.5
Arsenic, mg/l (total)	0.01	<0.005
Mercury, mg/l	0.006	<0.0002
Cadmium, mg/l	0.003	<0.001
Manganese, mg/l	0.4	<0.02
Nickel, mg/l (total)	0.07	<0.02
Nitrates, mg/l	50	102.0
Nitrites, mg/l	0.2	<0.2
Selenium, mg/l (total)	0.01	<0.01
Copper, mg/l (total)	2.0	<0.02
Lead, mg/l (total)	0.01	<0.01
Fluorides, mg/l	0.7	<0.1
Chromium, mg/l (total)	0.05	<0.02
Cyanides, mg/l	0.07	<0.03
Organic matter		
Total Cl- pesticides, mg/l	0.05	<0.001
Radiological indices		
α radioactivity, Bq/l (total)	0.1	<0.1
β radioactivity, Bq/l (total)	1.0	<1.0
Control indices		
Aluminium, mg/l	0.3	<0.1
Polyphosphates, mg/l	3.5	<0.5

Attachment 2: **Microbiological analysis**

Customer : **"Tetra-Tech ENE – Georgia"**

Sample name: **water sample 3** "Shavshvebi" DH.

Data sampled**: 28.02.2012**

Lab. N: **117 W**

Microorganism	**Standard value**	**Results**
Mesophilic aerobes and facultative anaerobes, in 1 ml	37^0C ≤20 22^0C ≤100	3 5
Total coliforms, in 300 ml	Not allowed	320
E coli, in 300 ml	Not allowed	Not detected
Streptococcus faecalis, in 250ml	Not allowed	Not detected
Pseudomonad aeruginoza, in 250ml	Not allowed	Not detected
Sulphite-reducing clostridia (Cl.perfringens), in 50ml	Not allowed	Not detected
Pathogen microorganisms, including Salmonella, in 100ml	Not allowed	Not detected

V. Gvakharia
President

Scinetific Research Firm Gamma
09.03.2012

Customer : **"Tetra-Tech ENE – Georgia"**

Sample name: **water sample 4** "Berbuki" Potable water borehole for refugees district

Data sampled**: 28.02.2012**

Lab. N: **118 W**

Attachment 1 **Physical and chemical examination Parameters**

Parameters	**Maximum allowable concentrations, according to the standard**	**Results**
Organoleptical indices		
Odour, unit	2	0

Taste, unit	2	0
Colour, unit	15	0
Turbidity, FTU	3.5	0.04
Major parameters		
Sulphates, mg/l	250	22.0
Chlorides, mg/l	250	7.10
Hardness, mg–eq/l (no more than)	7 – 10	4.09
Calcium, mg/l	140	69.0
Magnesium, mg/l	85	7.8
Sodium, mg/l	200	10.45
Potassium, mg/l	-	1.38
Zinc, mg/l	3	<0.02
Iron, mg/l	0.3	0.14
General indices		
pH	6 – 9	7.6
Permanganate oxidability, mg O	3	0.24
Dry residue, mg/l (no more than)	1000-1500	253.5
Barium, mg/l	0.7	<0.5
Boron, mg/l (total)	0.5	<0.5
Arsenic, mg/l (total)	0.01	<0.005
Mercury, mg/l	0.006	0.00065
Cadmium, mg/l	0.003	<0.001
Manganese, mg/l	0.4	<0.02
Nickel, mg/l (total)	0.07	<0.02
Nitrates, mg/l	50	5.6
Nitrites, mg/l	0.2	<0.2
Selenium, mg/l (total)	0.01	<0.01
Copper, mg/l (total)	2.0	<0.02
Lead, mg/l (total)	0.01	<0.01
Fluorides, mg/l	0.7	<0.1
Chromium, mg/l (total)	0.05	<0.02
Cyanides, mg/l	0.07	<0.03
Organic matter		
Total Cl- pesticides, mg/l	0.05	<0.001
Radiological indices		
α radioactivity, Bq/l (total)	0.1	<0.1
β radioactivity, Bq/l (total)	1.0	<1.0
Control indices		
Aluminium, mg/l	0.3	<0.1
Polyphosphates, mg/l	3.5	<0.5

Attachment 2: **Microbiological analysis**

Customer : **"Tetra-Tech ENE – Georgia"**

Sample name: **water sample 4** "Berbuki" Potable water borehole for refugees district

Data sampled**: 28.02.2012**

Lab. N: **118 W**

Microorganism	**Standard value**	**Results**
Mesophilic aerobes and facultative anaerobes, in 1 ml	37^0C ≤20 22^0C ≤100	1 1
Total coliforms, in 300 ml	Not allowed	Not detected
E coli, in 300 ml	Not allowed	Not detected
Streptococcus faecalis, in 250ml	Not allowed	Not detected
Pseudomonad aeruginoza, in 250ml	Not allowed	Not detected
Sulphite-reducing clostridia (Cl.perfringens), in 50ml	Not allowed	Not detected
Pathogen microorganisms, including Salmonella, in 100ml	Not allowed	Not detected

V. Gvakharia
President

Scinetific Research Firm Gamma
09.03.2012

Customer : **"Tetra-Tech ENE – Georgia"**

Sample name: **water sample 5** "Berbuki" vilige DH.

Data sampled**: 28.02.2012**

Attachment 1 **Physical and chemical examination Parameters**

Parameters	**Maximum allowable concentrations, according to the standard**	**Results**
Organoleptical indices		
Odour, unit	2	0
Taste, unit	2	0
Colour, unit	15	0
Turbidity, FTU	3.5	0
Major parameters		
Sulphates, mg/l	250	16.4
Chlorides, mg/l	250	83.52
Hardness, mg–eq/l (no more than)	7 – 10	3.70
Calcium, mg/l	140	60.0
Magnesium, mg/l	85	8.40
Sodium, mg/l	200	9.57
Potassium, mg/l	-	1.1
Zinc, mg/l	3	<0.02
Iron, mg/l	0.3	0.18
General indices		
pH	6 – 9	7.65
Permanganate oxidability, mg O	3	0.48
Dry residue, mg/l (no more than)	1000-1500	222.2
Barium, mg/l	0.7	<0.5
Boron, mg/l (total)	0.5	<0.5
Arsenic, mg/l (total)	0.01	<0.005
Mercury, mg/l	0.006	0.00052
Cadmium, mg/l	0.003	<0.001
Manganese, mg/l	0.4	<0.02
Nickel, mg/l (total)	0.07	<0.02
Nitrates, mg/l	50	6.7
Nitrites, mg/l	0.2	<0.2
Selenium, mg/l (total)	0.01	<0.01
Copper, mg/l (total)	2.0	<0.02
Lead, mg/l (total)	0.01	<0.01
Fluorides, mg/l	0.7	<0.1
Chromium, mg/l (total)	0.05	<0.02
Cyanides, mg/l	0.07	<0.03
Organic matter		
Total Cl- pesticides, mg/l	0.05	<0.001

Radiological indices		
α radioactivity, Bq/l (total)	0.1	<0.1
β radioactivity, Bq/l (total)	1.0	<1.0
Control indices		
Aluminium, mg/l	0.3	<0.1
Polyphosphates, mg/l	3.5	<0.5

Attachment 2: **Microbiological analysis**

Customer : **"Tetra-Tech ENE – Georgia"**

Sample name: **water sample 5** "Berbuki" vilige DH.

Data sampled**: 28.02.2012**

Lab. N: **119 W**

Microorganism	**Standard value**	**Results**
Mesophilic aerobes and facultative anaerobes, in 1 ml	37^0C ≤20 22^0C ≤100	4 12
Total coliforms, in 300 ml	Not allowed	Not detected
E coli, in 300 ml	Not allowed	Not detected
Streptococcus faecalis, in 250ml	Not allowed	Not detected
Pseudomonad aeruginoza, in 250ml	Not allowed	Not detected
Sulphite-reducing clostridia (Cl.perfringens), in 50ml	Not allowed	Not detected
Pathogen microorganisms, including Salmonella, in 100ml	Not allowed	Not detected

V. Gvakharia
President

Scinetific Research Firm Gamma
09.03.2012

Customer : **"Tetra-Tech ENE – Georgia"**

Sample name: **water sample 6** "Skra" DH.

Data sampled**: 28.02.2012**

Lab. N: **120W**

Attachment 1 **Physical and chemical examination Parameters**

Parameters	**Maximum allowable concentrations, according to the standard**	**Results**
Organoleptical indices		
Odour, unit	2	0
Taste, unit	2	0
Colour, unit	15	0
Turbidity, FTU	3.5	0
Major parameters		
Sulphates, mg/l	250	56.0
Chlorides, mg/l	250	17.04
Hardness, mg–eq/l (no more than)	7 – 10	5.87
Calcium, mg/l	140	76.0
Magnesium, mg/l	85	25.2
Sodium, mg/l	200	47.74
Potassium, mg/l	-	1.05
Zinc, mg/l	3	<0.02
Iron, mg/l	0.3	0.22
General indices		
pH	6 – 9	7.55
Permanganate oxidability, mg O	3	0.80
Dry residue, mg/l (no more than)	1000-1500	618.4
Barium, mg/l	0.7	<0.5
Boron, mg/l (total)	0.5	<0.5
Arsenic, mg/l (total)	0.01	<0.005
Mercury, mg/l	0.006	0.00049
Cadmium, mg/l	0.003	<0.001
Manganese, mg/l	0.4	<0.02

Nickel, mg/l (total)	0.07	<0.02
Nitrates, mg/l	50	3.1
Nitrites, mg/l	0.2	<0.2
Selenium, mg/l (total)	0.01	<0.01
Copper, mg/l (total)	2.0	<0.02
Lead, mg/l (total)	0.01	<0.01
Fluorides, mg/l	0.7	<0.1
Chromium, mg/l (total)	0.05	<0.02
Cyanides, mg/l	0.07	<0.03
Organic matter		
Total Cl- pesticides, mg/l	0.05	<0.001
Radiological indices		
α radioactivity, Bq/l (total)	0.1	<0.1
β radioactivity, Bq/l (total)	1.0	<1.0
Control indices		
Aluminium, mg/l	0.3	<0.1
Polyphosphates, mg/l	3.5	<0.5

Attachment 2: **Microbiological analysis**

Customer : **"Tetra-Tech ENE – Georgia"**

Sample name: **water sample 6** "Skra" DH.

Data sampled**: 28.02.2012**

Lab. N: **120W**

Microorganism	**Standard value**	**Results**
Mesophilic aerobes and facultative anaerobes, in 1 ml	37^0C ≤20 22^0C ≤100	5 6
Total coliforms, in 300 ml	Not allowed	Not detected
E coli, in 300 ml	Not allowed	Not detected
Streptococcus faecalis, in 250ml	Not allowed	Not detected
Pseudomonad aeruginoza, in 250ml	Not allowed	Not detected
Sulphite-reducing clostridia (Cl.perfringens), in 50ml	Not allowed	Not detected
Pathogen microorganisms, including Salmonella, in	Not allowed	Not detected

100ml		

V. Gvakharia
President

Scinetific Research Firm Gamma
09.03.2012

Customer : **"Tetra-Tech ENE – Georgia"**

Sample name: **water sample 7** "Akhalsofeli" water Headeworks 1 (Okrosofeli)

Data sampled**: 28.02.2012**

Lab. N: **121 W**

Attachment 1 **Physical and chemical examination Parameters**

Parameters	**Maximum allowable concentrations, according to the standard**	**Results**
Organoleptical indices		
Odour, unit	2	0
Taste, unit	2	0
Colour, unit	15	10
Turbidity, FTU	3.5	0.35
Major parameters		
Sulphates, mg/l	250	350.0
Chlorides, mg/l	250	17.04
Hardness, mg–eq/l (no more than)	7 – 10	11.96
Calcium, mg/l	140	166
Magnesium, mg/l	85	44.4
Sodium, mg/l	200	85.8
Potassium, mg/l	-	3.47
Zinc, mg/l	3	<0.02
Iron, mg/l	0.3	0.05
General indices		

pH	6 – 9	7.6
Permanganate oxidability, mg O	3	1.52
Dry residue, mg/l (no more than)	1000-1500	930.5
Barium, mg/l	0.7	<0.5
Boron, mg/l (total)	0.5	<0.5
Arsenic, mg/l (total)	0.01	<0.005
Mercury, mg/l	0.006	<0.0002
Cadmium, mg/l	0.003	<0.001
Manganese, mg/l	0.4	<0.02
Nickel, mg/l (total)	0.07	<0.02
Nitrates, mg/l	50	1.1
Nitrites, mg/l	0.2	<0.2
Selenium, mg/l (total)	0.01	<0.01
Copper, mg/l (total)	2.0	<0.02
Lead, mg/l (total)	0.01	<0.01
Fluorides, mg/l	0.7	<0.1
Chromium, mg/l (total)	0.05	<0.02
Cyanides, mg/l	0.07	<0.03
Organic matter		
Total Cl- pesticides, mg/l	0.05	<0.001
Radiological indices		
α radioactivity, Bq/l (total)	0.1	<0.1
β radioactivity, Bq/l (total)	1.0	<1.0
Control indices		
Aluminium, mg/l	0.3	<0.1
Polyphosphates, mg/l	3.5	<0.5

Attachment 2: **Microbiological analysis**

Customer : **"Tetra-Tech ENE – Georgia"**

Sample name: **water sample 7** "Akhalsofeli" water Headeworks 1 (Okrosofeli)

Data sampled**: 28.02.2012**

Lab. N: **121 W**

Microorganism	**Standard value**	**Results**
Mesophilic aerobes and facultative anaerobes, in 1 ml	37^0C ≤20 22^0C ≤100	1 2
Total coliforms, in 300 ml	Not allowed	Not detected
E coli, in 300 ml	Not allowed	Not detected
Streptococcus faecalis, in 250ml	Not allowed	Not detected
Pseudomonad aeruginoza, in 250ml	Not allowed	Not detected
Sulphite-reducing clostridia (Cl.perfringens), in 50ml	Not allowed	Not detected
Pathogen microorganisms, including Salmonella, in 100ml	Not allowed	Not detected

V. Gvakharia
President

Scinetific Research Firm Gamma
09.03.2012

Customer : **"Tetra-Tech ENE – Georgia"**

Sample name: **water sample 8** "Akhalsofeli" water Headeworks 2 (Jagaraantkari)

Data sampled**: 28.02.2012**

Lab. N: **122W**

Attachment 1 **Physical and chemical examination Parameters**

Parameters	**Maximum allowable concentrations, according to the standard**	**Results**
Organoleptical indices		
Odour, unit	2	0
Taste, unit	2	0
Colour, unit	15	0
Turbidity, FTU	3.5	0.01
Major parameters		

Sulphates, mg/l	250	520.0
Chlorides, mg/l	250	34.08
Hardness, mg–eq/l (no more than)	7 – 10	17.53
Calcium, mg/l	140	244.0
Magnesium, mg/l	85	64.8
Sodium, mg/l	200	58.3
Potassium, mg/l	-	7.2
Zinc, mg/l	3	<0.02
Iron, mg/l	0.3	0.02
General indices		
pH	6 – 9	7.40
Permanganate oxidability, mg O	3	1.84
Dry residue, mg/l (no more than)	1000-1500	1227.9
Barium, mg/l	0.7	<0.5
Boron, mg/l (total)	0.5	<0.5
Arsenic, mg/l (total)	0.01	<0.005
Mercury, mg/l	0.006	<0.0002
Cadmium, mg/l	0.003	<0.001
Manganese, mg/l	0.4	<0.02
Nickel, mg/l (total)	0.07	<0.02
Nitrates, mg/l	50	24.4
Nitrites, mg/l	0.2	<0.2
Selenium, mg/l (total)	0.01	<0.01
Copper, mg/l (total)	2.0	<0.02
Lead, mg/l (total)	0.01	<0.01
Fluorides, mg/l	0.7	<0.1
Chromium, mg/l (total)	0.05	<0.02
Cyanides, mg/l	0.07	<0.03
Organic matter		
Total Cl- pesticides, mg/l	0.05	<0.001
Radiological indices		
α radioactivity, Bq/l (total)	0.1	<0.1
β radioactivity, Bq/l (total)	1.0	<1.0
Control indices		
Aluminium, mg/l	0.3	<0.1
Polyphosphates, mg/l	3.5	<0.5

Attachment 2: **Microbiological analysis**

Customer : **"Tetra-Tech ENE – Georgia"**

Sample name: **water sample 8** "Akhalsofeli" water Headeworks 2 (Jagaraantkari)

Data sampled**: 28.02.2012**

Lab. N: **122W**

Microorganism	**Standard value**	**Results**
Mesophilic aerobes and facultative anaerobes, in 1 ml	37^0C ≤20 22^0C ≤100	28 31
Total coliforms, in 300 ml	Not allowed	22
E coli, in 300 ml	Not allowed	Not detected
Streptococcus faecalis, in 250ml	Not allowed	Not detected
Pseudomonad aeruginoza, in 250ml	Not allowed	Not detected
Sulphite-reducing clostridia (Cl.perfringens), in 50ml	Not allowed	Not detected
Pathogen microorganisms, including Salmonella, in 100ml	Not allowed	Not detected

V. Gvakharia
President

Scinetific Research Firm Gamma
09.03.2012

Customer: **"Tetra-Tech ENE – Georgia"**

Sample name: **water sample 9** "Akhalsofeli" DH

Data sampled**: 28.02.2012**

Lab. N: **123 W**

Attachment 1 **Physical and chemical examination Parameters**

Parameters	**Maximum allowable concentrations, according to the standard**	**Results**
Organoleptical indices		
Odour, unit	2	0
Taste, unit	2	0
Colour, unit	15	10
Turbidity, FTU	3.5	1.33
Major parameters		
Sulphates, mg/l	250	910.0
Chlorides, mg/l	250	73.84
Hardness, mg–eq/l (no more than)	7 – 10	23.30
Calcium, mg/l	140	312.0
Magnesium, mg/l	85	93.6
Sodium, mg/l	200	257.4
Potassium, mg/l	-	5.5
Zinc, mg/l	3	<0.02
Iron, mg/l	0.3	0.07
General indices		
pH	6 – 9	7.5
Permanganate oxidability, mg O	3	0.56
Dry residue, mg/l (no more than)	1000-1500	2100.5
Barium, mg/l	0.7	<0.5
Boron, mg/l (total)	0.5	<0.5
Arsenic, mg/l (total)	0.01	<0.005
Mercury, mg/l	0.006	<0.0002
Cadmium, mg/l	0.003	<0.001
Manganese, mg/l	0.4	<0.02
Nickel, mg/l (total)	0.07	<0.02
Nitrates, mg/l	50	163.0
Nitrites, mg/l	0.2	<0.2
Selenium, mg/l (total)	0.01	<0.01
Copper, mg/l (total)	2.0	<0.02
Lead, mg/l (total)	0.01	<0.01
Fluorides, mg/l	0.7	<0.1
Chromium, mg/l (total)	0.05	<0.02
Cyanides, mg/l	0.07	<0.03
Organic matter		

Total Cl- pesticides, mg/l	0.05	<0.001
Radiological indices		
α radioactivity, Bq/l (total)	0.1	<0.1
β radioactivity, Bq/l (total)	1.0	<1.0
Control indices		
Aluminium, mg/l	0.3	<0.1
Polyphosphates, mg/l	3.5	<0.5

Attachment 2: **Microbiological analysis**

Customer: **"Tetra-Tech ENE – Georgia"**

Sample name: **water sample 9** "Akhalsofeli" DH

Data sampled**: 28.02.2012**

Lab. N: **123 W**

Microorganism	**Standard value**	**Rezults**
Mesophilic aerobes and facultative anaerobes, in 1 ml	37^0C ≤20 22^0C ≤100	1 10
Total coliforms, in 300 ml	Not allowed	Not detected
E coli, in 300 ml	Not allowed	Not detected
Streptococcus faecalis, in 250ml	Not allowed	Not detected
Pseudomonad aeruginoza, in 250ml	Not allowed	Not detected
Sulphite-reducing clostridia (Cl.perfringens), in 50ml	Not allowed	Not detected
Pathogen microorganisms, including Salmonella, in 100ml	Not allowed	Not detected

V. Gvakharia
President

Scinetific Research Firm Gamma
09.03.2012

Customer: **"Tetra-Tech ENE – Georgia"**

Sample name: **water sample 10** "Mokhisi" DH

Data sampled**: 28.02.2012**

Lab. N: **124 W**

Attachment 1 **Physical and chemical examination Parameters**

Parameters	**Maximum allowable concentrations, according to the standard**	**Results**
Organoleptical indices		
Odour, unit	2	0
Taste, unit	2	-
Colour, unit	15	40
Turbidity, FTU	3.5	257
Major parameters		
Sulphates, mg/l	250	236.0
Chlorides, mg/l	250	83.78
Hardness, mg–eq/l (no more than)	7 – 10	5.38
Calcium, mg/l	140	79.0
Magnesium, mg/l	85	18.0
Sodium, mg/l	200	150.7
Potassium, mg/l	-	2.64
Zinc, mg/l	3	<0.02
Iron, mg/l	0.3	11.40
General indices		
pH	6 – 9	7.50
Permanganate oxidability, mg O	3	8.16
Dry residue, mg/l (no more than)	1000-1500	754.3
Barium, mg/l	0.7	<0.5
Boron, mg/l (total)	0.5	<0.5
Arsenic, mg/l (total)	0.01	<0.005
Mercury, mg/l	0.006	<0.0002
Cadmium, mg/l	0.003	<0.001
Manganese, mg/l	0.4	<0.02

Nickel, mg/l (total)	0.07	<0.02
Nitrates, mg/l	50	<0.5
Nitrites, mg/l	0.2	<0.02
Selenium, mg/l (total)	0.01	<0.01
Copper, mg/l (total)	2.0	<0.02
Lead, mg/l (total)	0.01	<0.01
Fluorides, mg/l	0.7	<0.5
Chromium, mg/l (total)	0.05	<0.02
Cyanides, mg/l	0.07	<0.03
Organic matter		
Total Cl- pesticides, mg/l	0.05	<0.001
Radiological indices		
α radioactivity, Bq/l (total)	0.1	<0.1
β radioactivity, Bq/l (total)	1.0	<1.0
Control indices		
Aluminium, mg/l	0.3	<0.1
Polyphosphates, mg/l	3.5	<0.5

Attachment 2: **Microbiological analysis**

Customer: **"Tetra-Tech ENE – Georgia"**

Sample name: **water sample 10** "Mokhisi" DH

Data sampled**: 28.02.2012**

Lab. N: **124 W**

Microorganism	**Standard value**	**Results**
Mesophilic aerobes and facultative anaerobes, in 1 ml	37^0C ≤20 22^0C ≤100	162 1528
Total coliforms, in 300 ml	Not allowed	280
E coli, in 300 ml	Not allowed	Not detected
Streptococcus faecalis, in 250ml	Not allowed	Not detected
Pseudomonad aeruginoza, in 250ml	Not allowed	Not detected

Sulphite-reducing clostridia (Cl.perfringens), in 50ml	Not allowed	Not detected
Pathogen microorganisms, including Salmonella, in 100ml	Not allowed	Not detected

V. Gvakharia
President

Scinetific Research Firm Gamma
09.03.2012

PART C

Test Results vs. Standard Requirements

As requested by the Client (Tetra-Tech ENE), Scientific-reserach firm Gamma carried out examination of drinking water supplied to IDP residences in Gori and Kareli munciipalities. Duration of assignment – 28 February to 12 March 2012. The works included sampling of water and analysis of the samples. Physico-chemical and microbiological characteristics of the sampled water versus requirements set by the Technical Regulations for Drinking Water. (approved by the order of the Ministret of Labour, Health and Social Affairs of Georgia, order N349N, 17 December 2007) are presented in the table below.

Sample №	Lab. registration №	Description	Conclusion on compliance
1.	115w	Tsilkani – tap	In line with standard
2.	116 w	Khertvisi – borehole	In line with standard
3.	117 w	Shavshvebi – borehole	Fails to meet the standard – calcium, nitrate, hardness and microbiological parameters exceed permissible limits
4.	118 w	Berbuki – borehole (IDP settlement)	In line with standard
5.	119 w	Berbuki –borehole (village)	In line with standard
6.	120 w	Skra – borehole	In line with standard
7.	121 w	Akhalsopeli – intake 1 (Okrosopeli)	Fails to meet the standard – calcium, sulphate and hardness exceed permissible limits
8.	122 w	Akhalsopeli – intake 2 (Jagaraantkari)	Fails to meet the standard – calcium, sulphate, hardness and microbiological parameters exceed permissible limits
9.	123 w	Akhalsopeli – borehole	Fails to meet the standard – calcium, magnesium, sulphate, nitrate, hardness and dry residue limits are violated
10.	124 w	Mokhisi – borehole (Note: because of the poor state of technical maintenance the borehole is out of operation since November 2011)	Fails to meet the standard – ironm permanganate oxidability, colour, turbidity and microbialological parameters exceed permissible limits

PART D

Test Results for Karaleti Settlement

PART D: Drinking Water Test Results for KARALETI Settlement

Both Karaleti 1 and 2 are supplied with drinking water from groundwater wells. In the TOR, doubts were voiced as to the quality of the drinking water supplied. Following the Initial Investigation Survey, water samples were taken by the Scientific Laboratory GAMMA, Tbilisi.

The results are included below and can be summarized as follows:

- All chemical parameters are within the Georgian Water Quality Guidelines.
- Both wells are bacteriologically contaminated.
- But the UV disinfection is effective: No bacteriological contamination has been found in the sample taken after the working disinfection unit. ***This in turn means that disinfection units are not optional. They must be put to use and must always be kept in good working order***.
- UV disinfection does not provide for effective network protection from secondary re-contamination. This could only be achieved with chlorination of the water.

Based on the laboratory analysis, no further measures are deemed necessary, except for ***the immediate putting into service of the UV disinfection units. This would include setting up the organisational and financial framework for the regular and timely replacement of the UV lamps*** (normally once a year).

PART D-1 – KARALETI 1 CHEMICAL WATER ANALYSIS

SCIENTIFIC-RESEARCH FIRM "G A M M A"
M. Alexidze st.9, Tbilisi, 380093, Georgia
Tel: (99532) 33-32-68, 29-49-39

CHEMICAL ANALYSIS OF WATER # 3395 lab No 948

Customer: **LTD " Ecoproeqti"**

Kind of Water	Underground
Water ID	**Karaleti 1**
Waterpoint	Befor Filter
Region	
Debit(m^3/day)	-
Pasport	
Colour	<15°
Odour	ND
Taste	-
Turbidity (FTU)	0.13
pH	7.20
Temperature °C	-
Dry Resid. (mg/l)	378.765
Conductiv.(S/m)	0.06110

	mg/l	mg-Eq
Hardness		6.980
Fr.Alkalinity		N.D.
Diss O_2	-	
Free CO_2	-	
C.O.D (mg/l O)	-	
General N	-	
Organic C	-	
Summary SiO_2	-	
H_3PO_4	-	
H_3BO_3	-	
H_2S	-	
Residual Cl	-	

Cations

Ion	mg/l	mg-Eq	mg-Eq%
NH_4	N.D.	N.D.	N.D.
*Ca	107.000	5.3500	69.94
*Mg	19.800	1.6296	21.30
Na	14.630	0.6389	8.35
K	1.210	0.0310	0.41
Sum	142.640	7.6495	100%

Anions

Ion	mg/l	mg-Eq	mg-Eq%
Cl	17.725	0.5000	6.91
*HCO_3	378.200	6.2000	85.69
CO_3	N.D.	N.D.	N.D.
SO_4	24.000	0.5000	6.91
NO_3	2.200	0.0355	0.49
Sum	422.125	7.2355	100%

<*> - above 20%; <N.D.> - not detected; <-> - not measured, ≤ - Background level

mineralization (mg/l): 564.765

The work Ledearship V.Gvakharia

22.08.2011

SCIENTIFIC-RESEARCH FIRM "G A M M A"
M. Alexidze st.9, Tbilisi, 380093, Georgia
Tel: (99532) 33-32-68, 29-49-39

CHEMICAL ANALYSIS OF WATER # 3396 lab No 949

Customer: **LTD " Ecoproeqti"**

Kind of Water	Underground
Water ID	**Karaleti 1**
Waterpoint	After Filter
Region	
Debit(m^3/day)	-
Pasport	
Colour	<15°
Odour	ND
Taste	Pleasant
Turbidity (FTU)	0.36
pH	7.10
Temperature °C	-
Dry Resid. (mg/l)	377.455
Conductiv.(S/m)	0.06149

	mg/l	mg-Eq
Hardness		6.690
Fr.Alkalinity		N.D.
Diss O_2	-	
Free CO_2	-	
C.O.D (mg/l O)	-	
General N	-	
Organic C	-	
Summary SiO_2	-	
H_3PO_4	-	
H_3BO_3	-	
H_2S	-	
Residual Cl	-	

Cations

Ion	mg/l	mg-Eq	mg-Eq%
NH_4	N.D.	N.D.	N.D.
*Ca	104.000	5.2000	70.68
*Mg	18.100	1.4897	20.25
Na	14.630	0.6389	8.68
K	1.100	0.0282	0.38
Sum	137.830	7.3568	100%

Anions

Ion	mg/l	mg-Eq	mg-Eq%
Cl	17.725	0.5000	6.81
*HCO_3	384.300	6.3000	85.79
CO_3	N.D.	N.D.	N.D.
SO_4	24.400	0.5083	6.92
NO_3	2.200	0.0355	0.48
Sum	428.625	7.3438	100%

<*> - above 20%; <N.D.> - not detected; <-> - not measured, ≤ - Background level

mineralization (mg/l): 566.455

The work Ledearship V.Gvakharia

22.08.2011

PART D-2 – KARALETI 1 BACTERIOLOGICAL WATER ANALYSIS

Gamma SCIENTIFIC RESEARCH FIRM

Customer : LTD "ECOPROEQTI"

Sample name: Karaleti 1, After Filter

Data sampled: 16.08.2011

Lab. N: 949 w

Method of Bacteriological Analysis

Determinant and methods for detection	Standard rate	Factual value
Mezophylic aerobes and facultative anaerobes 1g(ml)	37°C ≤ 20 22°C ≤ 100	0 0
Total Coliforms in 300 ml	NA	ND
Escherichia coli in 300 ml	NA	ND
Streptococcus fecalis in 250 ml	NA	-
Pseudomonas aeroginosa in 250 ml	NA	-
Sulphite- reducing Clostridia in 50 ml	NA	-
Pathogen microorganisms, including Salmonella in 100 ml	NA	-

The work Ledearship V.Gvakharia

20.08.2011

9 M. Alexidze st, Tbilisi, Georgia 0193 0193 [illegible]
tel: +(995 32) 330 274, 330 374 tel/fax: +(995 32) 333 263 e-mail: gamma@gamma.ge

Gamma SCIENTIFIC RESEARCH FIRM

Customer : LTD "ECOPROEQTI"

Sample name: Karaleti 1, Before Filter

Data sampled: 16.08.2011

Lab. N: 948 w

Bacteriological Analysis

Determinant and methods for detection	Standard rate	Factual value
Mezophylic aerobes and facultative anaerobes 1g(ml)	37°C ≤ 20 22°C ≤ 100	24 48
Total Coliforms in 300 ml	NA	16
Escherichia coli in 300 ml	NA	8
Streptococcus fecalis in 250 ml	NA	-
Pseudomonas aeroginosa in 250 ml	NA	-
Sulphite- reducing Clostridia in 50 ml	NA	-
Pathogen microorganisms, including Salmonella in 100 ml	NA	-

The work Ledearship V.Gvakharia

20.08.2011

9 M. Alexidze st, Tbilisi, Georgia 0193 0193 [illegible]
tel: +(995 32) 330 274, 330 374 tel/fax: +(995 32) 333 263 e-mail: gamma@gamma.ge

PART D-3 – KARALETI 2 CHEMICAL WATER ANALYSIS

SCIENTIFIC-RESEARCH FIRM "G A M M A"
M. Alexidze st 9, Tbilisi, 380093, Georgia
Tel: (99532) 33-32-68, 29-49-39

CHEMICAL ANALYSIS OF WATER # 3393 lab No 946

Customer: **LTD " Ecoproeqti"**

Kind of Water	Underground
Water ID	**Karaleti 2**
Watepoint	Befor Filter
Region	
Debit(m³/day)	-
Pasport	
Colour	<15°
Odour	ND
Taste	-
Turbidity (FTU)	2.55
pH	7.30
Temperature ºC	-
Dry Resid. (mg/l)	381.470
Conductiv.(S/m)	0.06591

	mg/l	mg-Eq
Hardness		6.713
Fr.Alkalinity		N.D.
Diss O_2	-	
Free CO_2	-	
C.O.D (mg/l O)	-	
General N	-	
Organic C	-	
Summary SiO_2	-	
H_3PO_4	-	
H_3BO_3	-	
H_2S	-	
Residual Cl	-	

Cations			
Ion	mg/l	mg-Eq	mg-Eq%
NH_4	N.D.	N.D.	N.D.
*Ca	102.000	5.1000	67.78
*Mg	19.600	1.6132	21.44
Na	17.710	0.7734	10.28
K	1.490	0.0382	0.51
Sum	140.800	7.5247	100%

Anions			
Ion	mg/l	mg-Eq	mg-Eq%
Cl	21.270	0.6000	8.16
*HCO_3	378.200	6.2000	84.34
CO_3	N.D.	N.D.	N.D.
SO_4	24.000	0.5000	6.80
NO_3	3.200	0.0516	0.70
Sum	426.670	7.3516	100%

<*> - above 20%; <N.D.> - not detected; <-> - not measured, ≤ - Background level

mineralization (mg/l): 567.470

The work Ledearship V.Gvakharia

22.08.2011

SCIENTIFIC-RESEARCH FIRM "G A M M A"
M. Alexidze st 9, Tbilisi, 380093, Georgia
Tel: (99532) 33-32-68, 29-49-39

CHEMICAL ANALYSIS OF WATER # 3394 lab 947

Customer: **LTD " Ekoproeqti"**

Kind of Water	Underground
Water ID	**Karaleti 2**
Watepoint	after Filter
Region	
Debit(m³/day)	-
Pasport	
Colour	<15°
Odour	ND
Taste	-
Turbidity (FTU)	0.00
pH	7.30
Temperature ºC	-
Dry Resid. (mg/l)	391.120
Conductiv.(S/m)	0.06643

	mg/l	mg-Eq
Hardness		6.681
Fr.Alkalinity		N.D.
Diss O_2	-	
Free CO_2	-	
C.O.D (mg/l O)	-	
General N	-	
Organic C	-	
Summary SiO_2	-	
H_3PO_4	-	
H_3BO_3	-	
H_2S	-	
Residual Cl	-	

Cations			
Ion	mg/l	mg-Eq	mg-Eq%
NH_4	N.D.	N.D.	N.D.
*Ca	104.000	5.2000	68.97
Mg	18.000	1.4815	19.65
Na	18.810	0.8214	10.89
K	1.430	0.0367	0.49
Sum	142.240	7.5395	100%

Anions			
Ion	mg/l	mg-Eq	mg-Eq%
Cl	14.180	0.4000	5.26
*HCO_3	402.600	6.6000	86.71
CO_3	N.D.	N.D.	N.D.
SO_4	26.800	0.5583	7.34
NO_3	3.300	0.0532	0.70
Sum	446.880	7.6116	100%

<*> - above 20%; <N.D.> - not detected; <-> - not measured, ≤ - Background level

mineralization (mg/l): 589.120

The work Ledearship V.Gvakharia

22.08.2011

PART D-4 – KARALETI 2 BACTERIOLOGICAL WATER ANALYSIS

Gamma
SCIENTIFIC RESEARCH FIRM

Customer : LTD "ECOPROEQTI"

Sample name: Karaleti 2, Before Filter

Data sampled: 16.08.2011

Lab. N: 946 W

Bacteriological Analysis

Determinant and methods for detection	Standard rate	Factual value
Mezophylic aerobes and facultative anaerobes 1g(ml)	37°C ≤ 20 22°C ≤ 100	72 92
Total Coliforms in 300 ml	NA	420
Escherichia coli in 300 ml	NA	420
Streptococcus fecalis in 250 ml	NA	-
Pseudomonas aeroginosa in 250 ml	NA	-
Sulphite- reducing Clostridia in 50 ml	NA	-
Pathogen microorganisms, including Salmonella in 100 ml	NA	-

The work Ledearship V.Gvakharia

20.08.2011

9 M. Alexidze st, Tbilisi, Georgia 0193
tel: +(995 32) 330 274, 330 374 tel/fax: +(995 32) 333 283 e-mail: gamma@gamma.ge

Gamma
SCIENTIFIC RESEARCH FIRM

Customer : LTD "ECOPROEQTI"

Sample name: Karaleti 2, After Filter

Data sampled: 16.08.2011

Lab. N: 947 w

Bacteriological Analysis

Determinant and methods for detection	Standard rate	Factual value
Mezophylic aerobes and facultative anaerobes 1g(ml)	37°C ≤ 20 22°C ≤ 100	70 100
Total Coliforms in 300 ml	NA	390
Escherichia coli in 300 ml	NA	390
Streptococcus fecalis in 250 ml	NA	-
Pseudomonas aeroginosa in 250 ml	NA	-
Sulphite- reducing Clostridia in 50 ml	NA	-
Pathogen microorganisms, including Salmonella in 100 ml	NA	-

The work Ledearship V.Gvakharia

20.08.2011

9 M. Alexidze st, Tbilisi, Georgia 0193
tel: +(995 32) 330 274, 330 374 tel/fax: +(995 32) 333 283 e-mail: gamma@gamma.ge

PART E

Test Results for Shavshvebi Settlement

PART E: Drinking Water Test Results for SHAVSHVEBI Settlement

Shavshvebi is supplied with drinking water from the new groundwater well. In the TOR, doubts were voiced as to the quality of the drinking water supplied. Following the Initial Investigation Survey, water samples were taken by the Scientific Laboratory GAMMA, Tbilisi.

The water quality analysis in the new well has shown a good compliance with the Georgian standards. Although the hardness with 12.88 mg-Eq/l (standard: 7-10 mg-Eq/l) and the sulfate (SO4) content with 390 mg/l (standard 250 mg/l) exceed the standard values, it is considered sufficient. These parameters do not imply a health risk (according to WHO-standards 500 mg/l sulfate is unproblematic). For further details of the results please refer to annex 4.

The microbiological analysis shows that the mezophilic aerobes and facultative anaerobes are under the limits but there is a slight contamination by coliformicbacterias. ***Subsequently it is absolutely mandatory that the UV-disinfection units are put in operation, constantly run and must always be kept in good working order.***

Explanatory

PART E

Kind of Water	Underground		mg/l	mg-Eq
Water ID	**Shavshvebi**	Hardness		12.884
Waterpoint	After filtrer	Fr.Alkalinity		N.D.
Region		Diss O_2	-	
Debit(m^3/day)	-	Free CO_2	-	
Pasport		C.O.D (mg/l O)	-	
Colour	<15°	General N	-	
Odour	ND	Organic C	-	
Taste	-	Summary SiO_2	-	
Turbidity (FTU)	0.17	H_3PO_4	-	
pH	7.20	H_3BO_3	-	
Temperature °C	-	H_2S	-	
Dry Resid. (mg/l)	1057.370	Residual Cl	-	
Conductiv.(S/m)	0.15340			

Cations				Anions			
Ion	mg/l	mg-Eq	mg-Eq%	Ion	mg/l	mg-Eq	mg-Eq%
NH_4	N.D.	N.D.	N.D.	*Cl	134.710	3.8000	20.68
*Ca	126.000	6.3000	34.41	*HCO_3	390.400	6.4000	34.82
*Mg	80.000	6.5844	35.96	CO_3	N.D.	N.D.	N.D.
*Na	123.200	5.3799	29.38	*SO_4	390.000	8.1250	44.21
K	1.760	0.0451	0.25	NO_3	3.300	0.0532	0.29
Sum	330.960	18.3094	100%	Sum	918.410	18.3782	100%

<*> - above 20%; <N.D.> - not detected; <-> - not measured, < - Background level

mineralization (mg/l): 1249.370

The work Ledearship V.Gvakharia

22.08.2011

Gamma SCIENTIFIC RESEARCH FIRM

სამეცნიერო-მეწარმეობის ფირმა "გამა"

Customer : LTD "ECOPROEQTI"

Sample name: Shavshvebi, Well

Data sampled: 16.08.2011

Lab. N: 950 w

Method of Bacteriological Analysis

Determinant and methods for detection	Standard rate	Factual value
Mezophylic aerobes and facultative anaerobes 1g(ml)	37°C ≤ 20 22°C ≤ 100	10 30
Total Coliforms in 300 ml	NA	7
Escherichia coli in 300 ml	NA	ND
Streptococcus fecalis in 250 ml	NA	-
Pseudomonas aeroginosa in 250 ml	NA	-
Sulphite- reducing Clostridia in 50 ml	NA	-
Pathogen microorganisms, including Salmonella in 100 ml	NA	-

The work Ledearship V.Gvakharia

20.08.2011

9 M. Alexidze st, Tbilisi, Georgia 0193 0193 თბილისი, მ.ალექსიძის ქ. №9

tel: +(995 32) 330 274, 330 374 tel/fax: +(995 32) 333 268 e-mail: gamma@gamma.ge

PART F

Photo Materials

MOKHISI

Mokhisi, PIC #1

Mokhisi, PIC #2 – Well and reservoir construction

Mokhisi, PIC #3 – Well and reservoir construction

Mokhisi, PIC #4 – Well headwork construction

AKHALSOPHELI

Akhalsopheli PIC #5

Akhalsopheli PIC #6 – Tap connected to Headwork #1 (Okrosopeli)

Akhalsopheli PIC #7 – Tap connected to Headwork #1 (Okrosopeli)

Akhalsopheli PIC #8 – Tap connected to Headwork #2 (Djigaraantkari)

Akhalsopheli PIC#9 – Well headwork construction

Akhalsopheli PIC#10 – Pipe coming out of well

SKRA

Skra PIC #11

Skra PIC #12 – Well headwork construction.

Skra PIC #13 – Well headwork construction.

Skra #14 – Well headwork construction.

BERBUKI

Berbuki PIC #15

Berbuki PIC #16 – Drinking water well of IDP Settlement

Berbuki PIC #17 – Drinking water well of IDP Settlement

Berbuki PIC #18 – Village well

KHURVALETI

Khurvaleti PIC #19

Khurvaleti PIC #20 – Drinking water well of IDP Settlement

Khurvaleti PIC #21 – Tapped pipe connected to the well.

Khurvaleti PIC #22 – Headwork of Drinking water well of IDP Settlement

SHAVSHVEBI

Shavshvebi PIC#23

Shavshvebi PIC#24 – Headwork of Drinking water well of IDP Settlement

Shavshvebi PIC#25 – Headwork of Drinking water well of IDP Settlement.

Shavshvebi PIC#26

TSILKANI

Tsilkani PIC#27

Tsilkani PIC#28 – Drinking water tap in IDP settlement, supplied from Tserovani (Yard of Mr. Kako Razmadze)

PART G

Location Maps

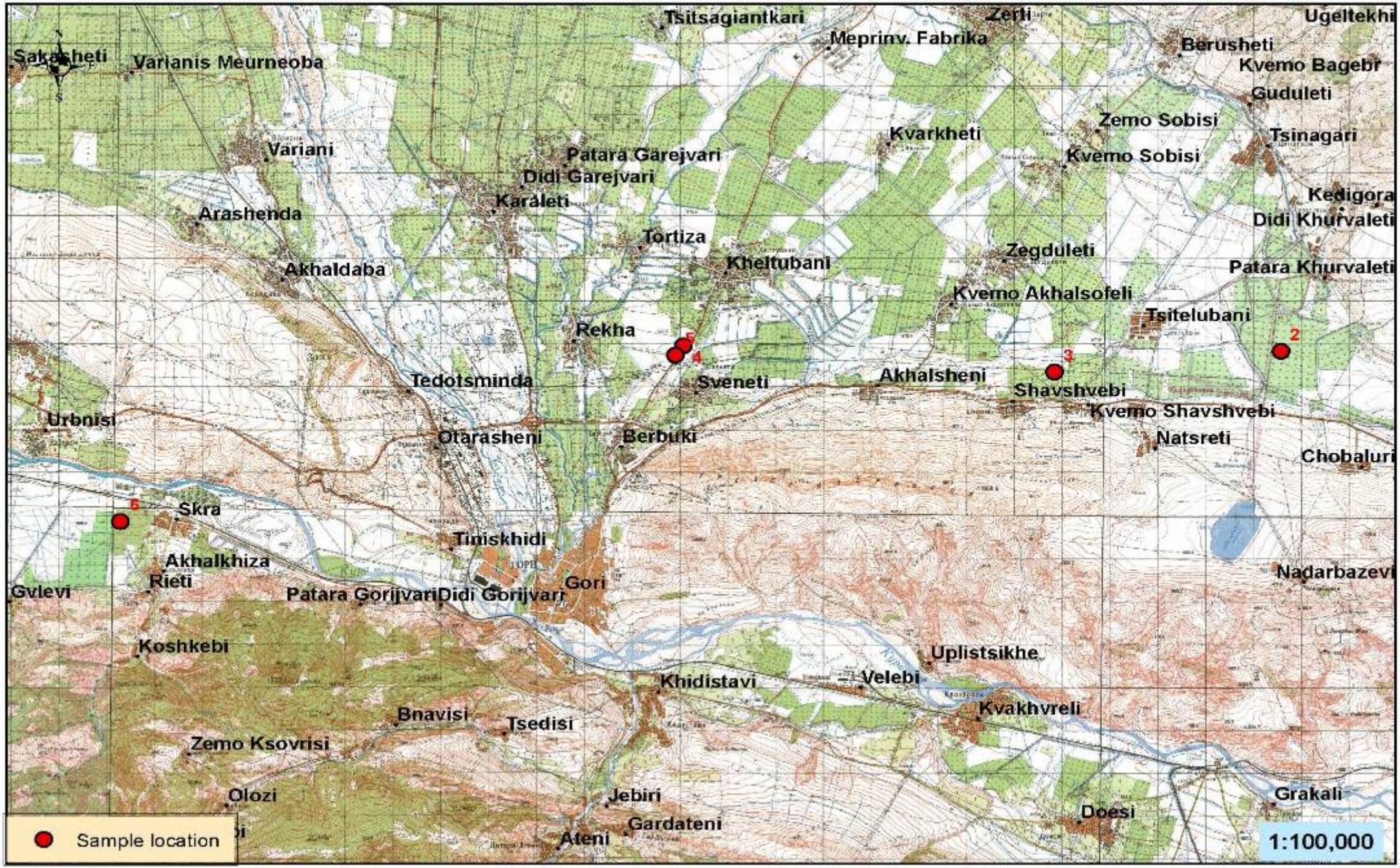
Tsitsagiantkari
Zerti
Ugeltekhi
Meprinv. Fabrika
Berusheti
Sakasheti
Varianis Meurneoba
Kvemo Bagebi
Guduleti
Zemo Sobisi
Kvarkheti
Tsinagari
Variani
Patara Garejvari
Kvemo Sobisi
Didi Garejvari
Karaleti
Kedigora
Arashenda
Didi Khurvaleti
Tortiza
Zegduleti
Kheltubani
Akhaldaba
Patara Khurvaleti
Kvemo Akhalsofeli
Tsitelubani
Rekha
5
4
2
3
Tedotsminda
Sveneti
Akhalsheni
Shavshvebi
Kvemo Shavshvebi
Urbnisi
Otarasheni
Berbuki
Natsreti
Chobaluri
6
Skra
Tiniskhidi
Akhalkhiza
Nadarbazevi
Rieti
Gori
Gvlevi
Patara GorijvariDidi Gorijvari
Koshkebi
Uplistsikhe
Velebi
Khidistavi
Kvakhvreli
Bnavisi
Tsedisi
Zemo Ksovrisi
Olozi
Jebiri
Grakali
Doesi
Gardateni
Ateni
Sample location
1:100,000

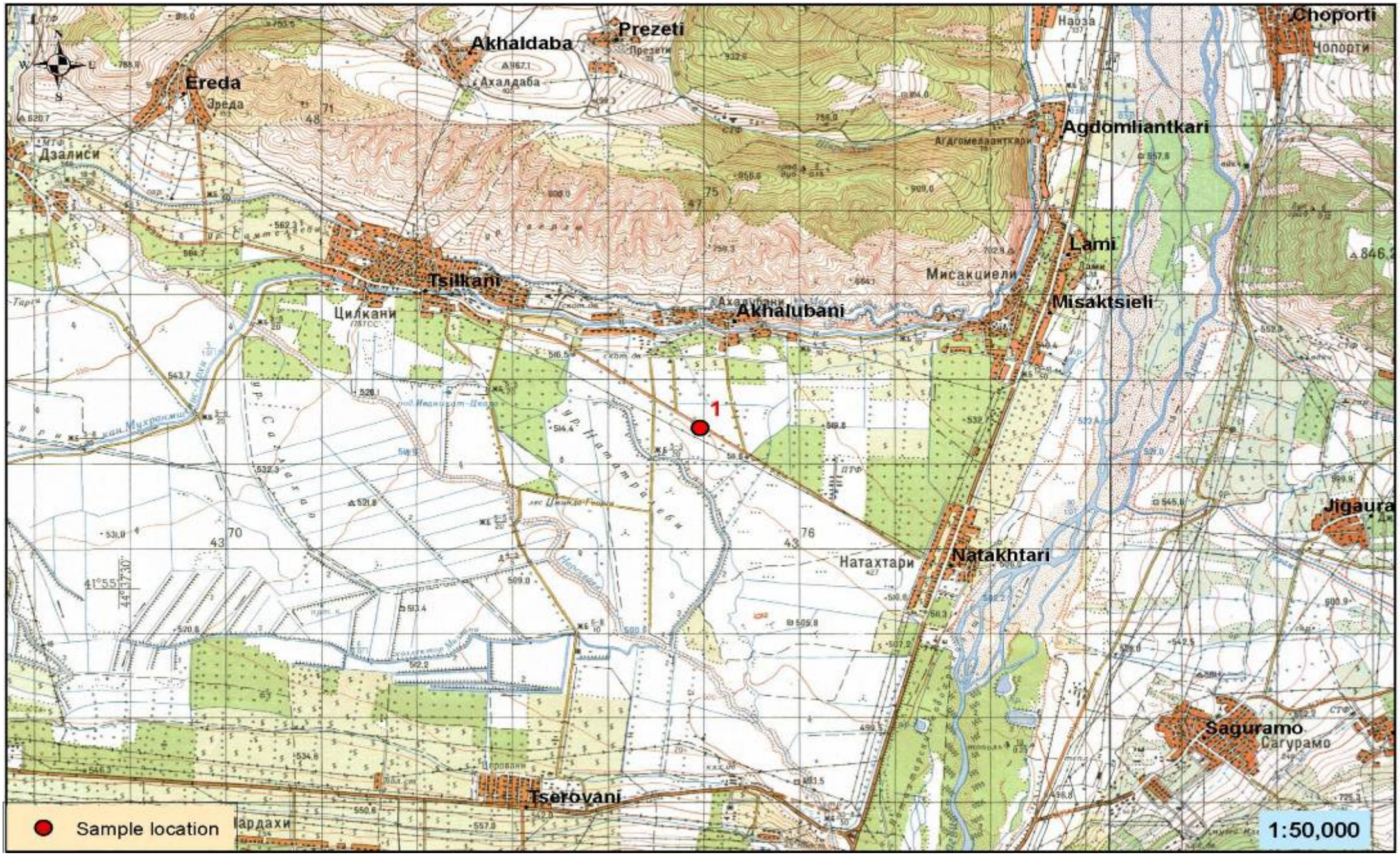
Prezeti
Akhaldaba
Ereda
Дзалиси
Tsilkani
Цилкани
Akhalubani
Ахалубани
Мисакциели
Misaktsieli
Lami
Agdomliantkari
Агдомелаантикари
Natakhtari
Натахтари
Tserovani
Церовани
Saguramo
Сагурамо
Jigaura
Choporti
Чопорти
Наоза
1
Sample location
1:50,000